Torrent 12FFC Multi-protocol PHY

TSMC 12FFC

Part #: SD0801

IP Rev: R130 - Doc Rev: 2.5

Integration Guide

October 19, 2022

CADENCE CONFIDENTIAL

© 1996-2022 Cadence Design Systems, Inc. All rights reserved.

Cadence Design Systems, Inc. (Cadence), 2655 Seely Ave., San Jose, CA 95134, USA.

Trademarks: Trademarks and service marks of Cadence Design Systems, Inc. contained in this document are attributed to Cadence with the appropriate symbol. For queries regarding Cadence's trademarks, contact the corporate legal department at the address shown above or call 800.862.4522. All other trademarks are the property of their respective holders.

Restricted Permission: This document is protected by copyright law and international treaties and contains trade secrets and proprietary information owned by Cadence. Unauthorized reproduction or distribution of this document, or any portion of it, may result in civil and criminal penalties. Except as specified in this permission statement, this document may not be copied, reproduced, modified, published, uploaded, posted, transmitted, or distributed in any way, without prior written permission from Cadence. This document contains the proprietary and confidential information of Cadence or its licensors, and is supplied subject to, and may be used only in accordance with, a written agreement between Cadence and its customer.

Unless otherwise agreed to by Cadence in writing, this statement grants Cadence customers permission to print one (1) hard copy of this document subject to the following conditions:

1. This document may not be modified in any way.
2. Any authorized copy of this document or portion thereof must include all original copyright, trademark, and other proprietary notices and this permission statement.
3. The information contained in this document cannot be used in the development of like products or software, whether for internal or external use, and shall not be used for the benefit of any other party, whether or not for consideration.

Disclaimer: INFORMATION IN THIS DOCUMENT IS SUBJECT TO CHANGE WITHOUT NOTICE AND DOES NOT REPRESENT A COMMITMENT ON THE PART OF CADENCE. EXCEPT AS MAY BE EXPLICITLY SET FORTH IN A WRITTEN AGREEMENT BETWEEN CADENCE AND ITS CUSTOMER, CADENCE DOES NOT MAKE, AND EXPRESSLY DISCLAIMS, ANY REPRESENTATIONS OR WARRANTIES AS TO THE COMPLETENESS, ACCURACY OR USEFULNESS OF THE INFORMATION CONTAINED IN THIS DOCUMENT. CADENCE DOES NOT WARRANT THAT USE OF SUCH INFORMATION WILL NOT INFRINGE ANY THIRD PARTY RIGHTS, AND CADENCE DISCLAIMS ALL IMPLIED WARRANTIES, INCLUDING MERCHANTABILITY AND FITNESS FOR A PARTICULAR PURPOSE. CADENCE DOES NOT ASSUME ANY LIABILITY FOR DAMAGES OR COSTS OF ANY KIND THAT MAY RESULT FROM USE OF SUCH INFORMATION. CADENCE CUSTOMER HAS COMPLETE CONTROL AND FINAL DECISION-MAKING AUTHORITY OVER ALL ASPECTS OF THE DEVELOPMENT, MANUFACTURE, SALE AND USE OF CUSTOMER'S PRODUCT, INCLUDING, BUT NOT LIMITED TO, ALL DECISIONS WITH REGARD TO DESIGN, PRODUCTION, TESTING, ASSEMBLY, QUALIFICATION, CERTIFICATION, INTEGRATION OF CADENCE PRODUCTS, INSTRUCTIONS FOR USE, LABELING AND DISTRIBUTION, AND CADENCE EXPRESSLY DISAVOWS ANY RESPONSIBILITY WITH REGARD TO ANY SUCH DECISIONS REGARDING CUSTOMER'S PRODUCT.

Restricted Rights: Use, duplication, or disclosure by the Government is subject to restrictions as set forth in FAR52.227-14 and DFAR252.227-7013 et seq. or its successor.

Table Of Contents

List Of Tables 5
List Of Figures 6
About this Document 7
1 Introduction 9
2 Delivery Contents 10
2.1 Deliverables 10
2.1.1 PHY and PCS 10
2.1.2 PMA 10
3 PHY Integration 12
3.1 PHY Pin Connections 12
3.1.1 PIPE Interface 12
3.1.2 Raw SerDes Interface 14
3.2 PHY configuration pins 16
3.3 PHY miscellaneous pins 17
4 Simulation 18
4.1 RTL Simulation Speedup 18
4.2 Gate-Level Simulations 18
4.3 Receiver Detect Simulation 18
5 Synthesis 19
5.1 PHY customer configuration options 19
5.2 Clocks 19
5.3 Clock Over-Constraint 20
5.4 Input / Output Delay Constraint 20
5.5 Ideal Clock Constraints (Pre CTS) 20
5.6 Driving / Loading Cell 20
5.7 Clock Gating 20
5.8 Clock MUX 20
5.9 Data synchronizers 21
5.10 Latch Cells 21
5.11 LINT 21
5.12 Cross Clock Domain Timing 21
6 Scan Insertion 22
7 Reset Control 23
8 Logical Equivalency Checking 24
9 PMA (Hard Macro) Guidelines 25
9.1 Process Technology 25
9.2 PMA Structure 26
9.2.1 Common 27
9.2.2 Transceiver Lane 27
9.2.3 Tx-only lane 27
9.3 Placement Constraints 27
9.4 Metal Fill 27
9.5 ESD Protection 27
9.6 Reference Clock Input 27
9.7 External Reference Clock Requirements 28
9.8 Internal Reference Clock Requirements 28
9.9 Differential Data Line Requirements 29
9.10 External Components Required 29
9.11 Power Supply Noise Tolerance 29
9.12 Power Supply Sequencing 29
9.13 PMA Power Supply Decoupling Capacitance 29
9.14 Package Information 30

9.14.1 Specifications ... 30
9.14.2 Power Supplies ... 30
9.15 SoC Side PMA ATB Pins ... 33
9.15.1 ESD Protection Requirements ... 33
9.15.2 ATB_Core_<0/1> Pin Usage ... 33
10 PHY Clock Description ... 34
10.1 Torrent 12FFC Multi-protocol PHY Clock Diagrams ... 34
10.2 Clock Skew Requirement between tx_td_clk_ln_<> in a multi-lane link ... 35
10.3 Clock Skew Requirement between cmn_psm_clk_in and xcvr_psm_clk_ln_<> ... 36
10.4 Frequency Information ... 36
10.4.1 Functional clocks ... 36
10.4.2 PMA Output Clock Constraints ... 36
11 Production Test Strategy ... 37
11.1 SCAN ... 37
11.2 Coverage ... 37
11.3 Analog ... 37
11.4 Scan Clocks / Resets ... 38
11.5 JTAG ... 38
11.6 Supported JTAG Instructions ... 40
11.7 Abstract BSDL ... 41
11.8 Boundary scan ... 41
11.8.1 DC-JTAG ... 41
11.8.2 AC-JTAG ... 41
11.9 Supported ATPG Flow ... 42
12 Loopback Modes (PMA) ... 43
12.1 Serial Loopback Mode ... 43
12.2 ISI Generation Loopback Mode ... 43
12.3 Line Side Loopback Mode ... 43
12.4 Far End Parallel Loopback Mode ... 43
12.5 Near End Parallel Loopback Mode ... 44
12.6 Recovered Clock Loopback Mode ... 44
13 PMA BIST ... 45
13.1 Usage Overview ... 45
14 Isolation Mode Test Sequence Descriptions ... 46
14.1 Enable PHY in PHY Isolation Mode with each Lane as its own Link (PIPE PCIe mode) ... 46
14.2 Change Link Power State and/or Data Rate in PHY Isolation Mode (PIPE mode) ... 46
Index ... 49

List Of Tables

Table 1: Acronyms 8
Table 2: Multi-protocol PIPE Interface Pins 12
Table 3: Raw SerDes Interface Pins (PIPE, Ethernet, Alternate SATA and DP Tx) 14
Table 4: PHY configuration pins 16
Table 5: PHY miscellaneous pins 17
Table 6: Clock Names 19
Table 7: Decoupling Capacitance 29
Table 8: Package RLC Guidelines 30
Table 9: Package Differential Signal Guidelines 30
Table 10: PMA Power and Ground Bump Details 31
Table 11: PHY functional clocks 36
Table 12: PHY output clock constraints 36
Table 13: PHY scan clocks 38
Table 14: Supported JTAG Instructions 40

List Of Figures

Figure 1: Torrent 12FFC Multi-protocol PHY Block Diagram 9
Figure 2: Scan Override on Resets 23
Figure 3: PMA Structure 26
Figure 4: Differential HCSL Reference Clock Connections 28
Figure 5: Power and Ground Connections in Package 32
Figure 6: SoC Side PMA ATB Pins 33
Figure 7: Data Rate clock diagram 34
Figure 8: Reference and PSM clock diagram 35
Figure 9: Full rate and MAC clock diagram 35
Figure 10: Coverage Formula 37
Figure 11: Boundary Scan Interface 39
Figure 12: PHY BSCAN TDI/TDO Connections 40

About this Document

This integration guide describes the strategy for integrating the Torrent 12FFC Multi-protocol PHY. It is intended for those involved in the process of product design integration.

This book contains the following sections:

Section 1 Introduction on page 9

Section 2 Delivery Contents on page 10

Section 3 PHY Integration on page 12

Section 4 Simulation on page 18

Section 5 Synthesis on page 19

Section 6 Scan Insertion on page 22

Section 7 Reset Control on page 23

Section 8 Logical Equivalency Checking on page 24

Section 9 PMA (Hard Macro) Guidelines on page 25

Section 10 PHY Clock Description on page 34

Section 11 Production Test Strategy on page 37

Section 12 Loopback Modes (PMA) on page 43

Section 13 PMA BIST on page 45

Section 14 Isolation Mode Test Sequence Descriptions on page 46

For additional information see the following documents:

Cadence Multi-Protocol PCS Specification

Torrent 12FFC Multi-protocol PHY - PHY Specification

Torrent 12FFC Multi-protocol PHY - PMA Specification

Torrent 12FFC Multi-protocol PHY Programmer's Guide

Table 1 lists possible acronyms used in this document.

Acronym	Meaning
AMBA	Advanced Micro-controller Bus Architecture
APB	Advanced Peripheral Bus
ATPG	Auitomatic test pattern Generation
BSDL	Boundary Scan Description Language
DFT	Design For Test
ET	Encounter Test Cadence Tool
IP	Intellectual Property
JTAG	Joint Test Action Group
OPCG	On-Product Clock Generation
PCI	Peripheral Component Interconnect
PCS	Physical Coding Sub layer
PHY	Physical Layer
PIPE	PHY Interface for PCI Express
PLL	Phase-locked Loop
PMA	Physical Media Attachment
RTL	Register Transfer Level
RX	Receive
SerDes	Serializer/Deserializer
SoC	System on a Chip
TAP	Test Access Port
TX	Transmit

Table 1: Acronyms

1 Introduction

Figure 1 shows a block diagram of the Torrent 12FFC Multi-protocol PHY. The PHY contains a Torrent12FFC Multi-protocol PMA, multi-protocol PCS, PHY power control logic, APB interface logic, TAP controller, clock and reset controller and supporting logic.

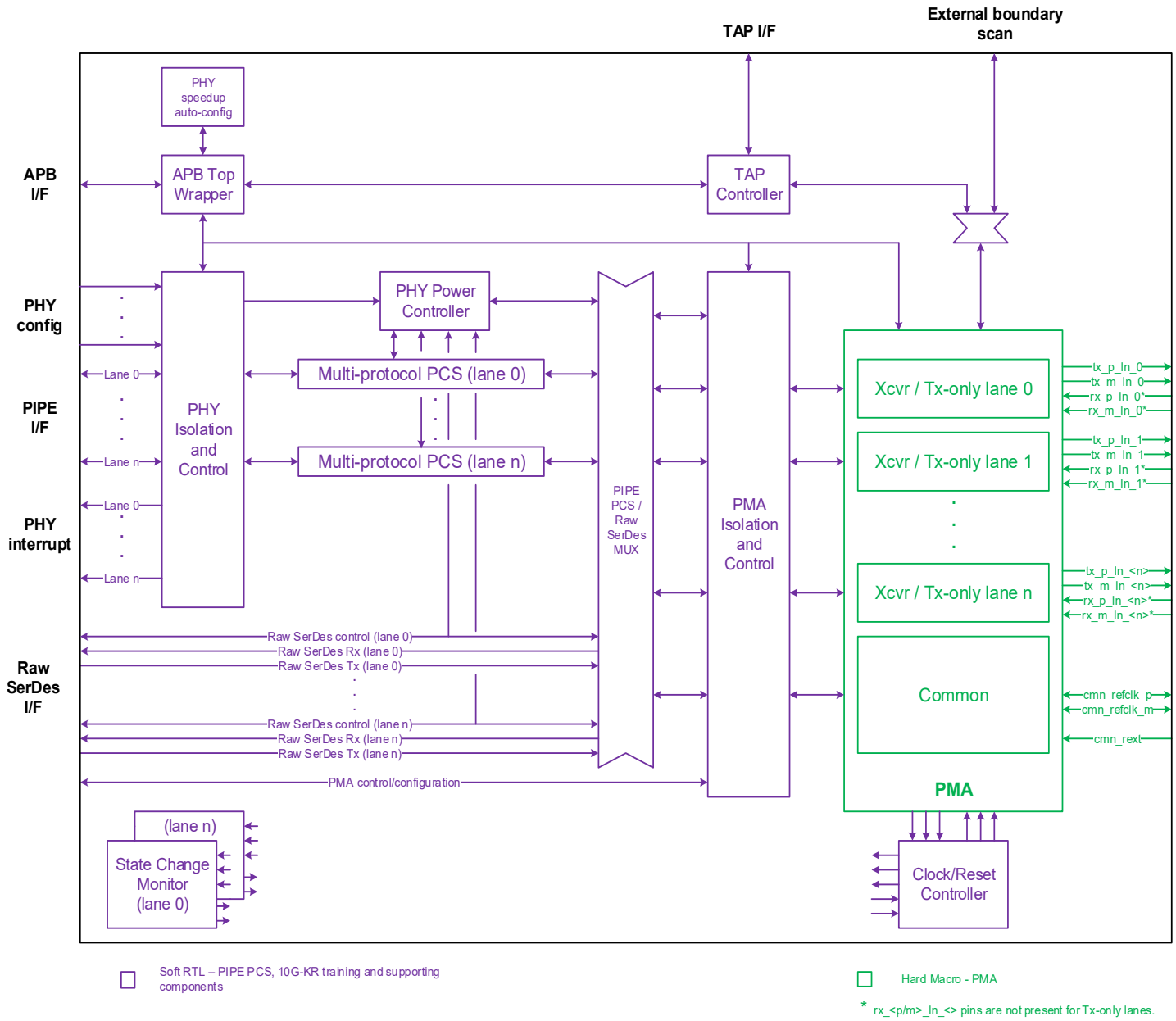

Figure 1: Torrent 12FFC Multi-protocol PHY Block Diagram

2 Delivery Contents

Please refer to the README and RELEASETREE files in the delivery for a complete description of the contents of the PHY delivery.

2.1 Deliverables

2.1.1 PHY and PCS

- Documentation
  - PHY specification
  - PCS specification
  - Integration guide
- RTL
- Trial synthesis
  - SDC constraints
  - RTL Compiler synthesis script
  - LEC script
  - Synthesis reports (area, power, etc.)
- Verification
  - Testbench RTL
  - Directed tests

2.1.2 PMA

- Documentation
  - PMA specification
  - Programmer’s guide
- Verification
  - RTL
  - Netlist
  - Analog high-level behavioral models
  - SDF
- CDL netlists for LVS
- DFT
  - ATPG setup
    - Scan abstracts
    - Ignore lists
    - Pin assignments
  - JTAG setup
    - BDSL control file
- GDS (physical macro)
- LEF (floorplanning abstract)

- LIB (timing model)
- Physical verification reports
  - Antenna checks
  - DRC
  - LVC
  - Packaging

3 PHY Integration

3.1 PHY Pin Connections

This section provides information on how the PIPE and Raw SerDes interfaces would be connected based on the selected protocol.

3.1.1 PIPE Interface

Table 2 lists PIPE interface pins which are only present for PHY configurations with a PIPE interface. For link signals only the master lanes signal is used for the entire link. Otherwise, the signal applies only to the individual lane.

Pin	I/O	Link/ Lane	PCIe	USB	PIPE SATA	Raw SerDes
	Connectivity					
pipe_l{nn:00}_32bit_sel	I	link	1'b1 = 32-bit PIPE data width*; 1'b0 = 16-bit PIPE data width			1'b0
pipe_l{nn:00}_eb_mode	I	link	1'b0	1'b0 = nominal half-full mode; 1'b1 = nominal empty mode		1'b0
pipe_l{nn:00}_clk	O	link	Controller			Unconnected
pipe_l{nn:00}_clk_in [1]	I	link	Controller			1’b0
pipe_l{nn:00}_rate[1:0]	I	link	Controller			2'b00
pipe_l{nn:00}_powerdown[2:0]	I	link	Controller			3'b010
pipe_l{nn:00}_phy_status	O	lane	Controller			Unconnected
pipe_l{nn:00}_tx_data[31:0]	I	lane	Controller*			32'h0000_0000
	*For 16-bit data width, tie [31:16] = 16'h0000.					
pipe_l{nn:00}_tx_data_k[3:0]	I	lane	Controller*			4'h0
	*For 16-bit data width, tie [3:2] = 2'b00.					
pipe_l{nn:00}_tx_sync_header[3:0]	I	lane	Controller*		4'h0	4'h0
	*Only used for PCIe Gen3 and USB SS+. If these rates not supported, tie low. For PCIe Gen3, tie [3:2] = 2'b00.					
pipe_l{nn:00}_tx_start_block	I	lane	Controller*		1'b0	1'b0
	*Only used for PCIe Gen3 and USB SS+. If these rates not supported, tie low.					
pipe_l{nn:00}_tx_data_valid	I	lane	Controller			1'b0
pipe_l{nn:00}_tx_elec_idle	I	lane	Controller			1'b1
pipe_l{nn:00}_tx_det_rx_lpbk	I	link	Controller			1'b0
pipe_l{nn:00}_tx_compliance	I	lane	Controller	1'b0		1'b0
pipe_l{nn:00}_tx_ones_zeros	I	lane	1'b0	Controller	1'b0	1'b0
pipe_l{nn:00}_tx_pattern[1:0]	I	lane	2'b00		Controller	2'b00
pipe_l{nn:00}_tx_128b_enc_byp	I	lane	1’b0	Controller	1’b0	1’b0
pipe_l{nn:00}_tx_deemph	I	lane	Controller*		18'd0	18'h0_0000
	*Bits[17:2] only used for PCIe Gen3 and USB SS+. If these rates not supported, tie low.					

Table 2: Multi-protocol PIPE Interface Pins

Pin	I/O	Link/ Lane	PCIe	USB	PIPE SATA	Raw SerDes
	Connectivity					
pipe_l{nn:00}_tx_get_local_preset_coef	I	lane	Controller*	1'b0		1'b0
	*Only used for PCIe Gen3. If these rates not supported, tie low.					
pipe_l{nn:00}_tx_local_preset_index[3:0]	I	lane	Controller*	4'h0		1'b0
	*Only used for PCIe Gen3. If these rates not supported, tie low.					
pipe_l{nn:00}_tx_local_tx_coef_valid	O	lane	Controller*	Unconnected		Unconnected
	*Only used for PCIe Gen3. If these rates not supported, leave unconnected.					
pipe_l{nn:00}_tx_local_tx_preset_coef[17:0]	output	lane	Controller*	Unconnected		Unconnected
	*Only used for PCIe Gen3. If these rates not supported, leave unconnected.					
pipe_l{nn:00}_tx_local_fs[5:0]	O	lane	Controller	Unconnected		Unconnected
pipe_l{nn:00}_tx_local_lf[5:0]	O	lane	Controller	Unconnected		Unconnected
pipe_l{nn:00}_tx_swing	I	lane	Controller	1'b0		1'b0
pipe_l{nn:00}_tx_margin[2:0]	I	lane	Controller	3'b000		3'b000
pipe_l{nn:00}_rx_data[31:0]	O	lane	Controller*			Unconnected
	*For 16-bit data width, leave [31:16] unconnected.					
pipe_l{nn:00}_rx_data_k[3:0]	O	lane	Controller*			Unconnected
	*For 16-bit data width, leave [3:2] unconnected.					
pipe_l{nn:00}_rx_status[2:0]	O	lane	Controller			Unconnected
pipe_l{nn:00}_rx_sync_header[3:0]	O	lane	Controller*		Unconnected	Unconnected
	*Only used for PCIe Gen3 and USB SS+. If these rates not supported, leave unconnected. For PCIe Gen3, leave [3:2] unconnected.					
pipe_l{nn:00}_rx_start_block	O	lane	Controller*		Unconnected	Unconnected
	*Only used for PCIe Gen3 and USB SS+. If these rates not supported, leave unconnected.					
pipe_l{nn:00}_rx_valid	O	lane	Controller			Unconnected
pipe_l{nn:00}_rx_data_valid	O	lane	Controller			Unconnected
pipe_l{nn:00}_rx_elec_idle	O	lane	Controller			Unconnected
pipe_l{nn:00}_align_detect	O	lane	Unconnected		Controller	Unconnected
pipe_l{nn:00}_rx_polarity	I	lane	Controller			1'b0
pipe_l{nn:00}_rx_termination	I	lane	1'b0	Controller	1'b0	1'b0
pipe_l{nn:00}_rx_eq_training	I	lane	1'b0	Controller	1'b0	1'b0
pipe_l{nn:00}_rx_link_eval_fb_dir_change[5:0]	O	lane	Controller*	Unconnected		Unconnected
	*Only used for PCIe Gen3. If these rates not supported, leave unconnected.					
pipe_l{nn:00}_rx_invalid_request	I	lane	Controller*	1'b0		1'b0
	*Only used for PCIe Gen3. If these rates not supported, tie low.					
pipe_l{nn:00}_rx_eq_eval	I	lane	Controller*	1'b0		1'b0
	*Only used for PCIe Gen3. If these rates not supported, tie low.					
phy_l{nn:00}_rx_elec_idle_det_en	I	link	Controller	1'b1		1'b1
phy_l{nn:00}_tx_cmn_mode_en	I	link	Controller	1'b1		1'b1
phy_l{nn:00}_ent_l1_x	I	link	Controller*	1'b0		1'b0
	*Used for L1 sub-state entry and exit per the PHY specification					

Table 2: Multi-protocol PIPE Interface Pins (Continued)

Pin	I/O	Link/ Lane	PCIe	USB	PIPE SATA	Raw SerDes
	Connectivity					
phy_l{nn:00}_ack_l1_x	O	link	Controller*	Unconnected		Unconnected
	*Used for L1 sub-state entry and exit per the PHY specification					
phy_l{nn:00}_pcie_l1_ss_sel	I	link	Tie high/low based on selected L1SS mode	1'b0		
phy_pma_suspend_override [2]	I	PHY	SoC/Controller/1'b0			
phy_en_refclk [3]	I	PHY	SoC/ Controller/ 1'b0	1'b0		
phy_refclk_reqd [3]	O	PHY	SoC/ Controller/ Unconnected	Unconnected		

Table 2: Multi-protocol PIPE Interface Pins (Continued)

1 Pin is only present for PHYs configured with PIPE source synchronous mode.

[2] Allows overriding internal PHY logic to prevent the PMA common from being suspended when all links are in a powered down state (per PHY specification). If not being used, tie low.

[3] PCIe proprietary interface for use when outputting the reference clock on cmn_refclk_<p/m>. If not PCIe or PCIe but not outputting a reference clock, tie phy_en_refclk low and leave phy_refclk_reqd open.

3.1.2 Raw SerDes Interface

Table 3 lists Raw SerDes interface pins. For link signals only the master lanes signal is used for the entire link. Otherwise, the signal applies only to the individual lane. Unused link inputs can be tied low and unused link outputs can be left unconnected.

Pins	I/O	Link/ Lane	PIPE (PCIe, USB, SATA)	Ethernet, Alt SATA	DP/eDP Tx	SRIO/ JESD204B XFI/ USXGMII
	Connectivity					
pma_cmn_ready	O	PHY	Unconnected	Controller/SoC		
pma_xcvr_pllclk_en_ln_{n:0}	I	link	1'b0	Controller		
pma_xcvr_pllclk_en_ack_ln_{n:0}	O	link	Unconnected	Controller		
pma_power_state_req_ln_{n:0}[5:0]	I	link	6'h00	Controller		
pma_power_state_ack_ln_{n:0}[5:0]	O	link	Unconnected	Controller		
pma_xcvr_data_width_ln_{n:0}[2:0]	I	link	3'd0	3'b101		
pma_xcvr_standard_mode_ ln_{n:0}[1:0]	I	link	2'b00			
pma_xcvr_pllclk_datart_ln_{n:0}	O	link	Unconnected	Controller (used to drive pma_tx_td_clk_ln_*)		
pma_xcvr_pllclk_fullrt_ln_{n:0} [4]	O	link	Controller/ Unconnected	Unconnected	Controller (provides the Tx 10-bit clock)	
pma_tx_td_ln_{n:0}[19:0]	I	lane	20'h0_0000	Controller		
pma_tx_td_clk_ln_{n:0}	I	lane	1'b0	Controller		

Table 3: Raw SerDes Interface Pins (PIPE, Ethernet, Alternate SATA and DP Tx)

Pins	I/O	Link/ Lane	PIPE (PCIe, USB, SATA)	Ethernet, Alt SATA	DP/eDP Tx	SRIO/ JESD204B XFI/ USXGMII
	Connectivity					
pma_tx_elec_idle_ln_{n:0}	I	lane	1'b0	Controller or tie low [1]		
pma_rx_rd_ln_{n:0}[19:0]	O	lane	Unconnected	Controller	Unconnected	Controller
pma_rx_rd_clk_ln_{n:0}	O	lane	Unconnected	Controller	Unconnected	Controller
pma_rx_signal_detect_ln_{n:0}	O	lane	Unconnected	Controller/ Unconnected [2]	Unconnected	Controller/ Unconnected [2]
pma_rx_rd_clk2x_ln_{n:0}	O	lane	Unconnected	Controller	Unconnected	Controller
mac_src_sel_ln_{n:0}[1:0]	I	lane	2'b00	Controller/ 2'b00*	2’b00	
*Or as required by Ethernet PCS and controller						
mac_div_sel0_ln_{n:0}[6:0]	I	lane	7'h01	Controller/ 7'h01*	7’h01	
*Or as required by Ethernet PCS and controller						
mac_div_sel1_ln_{n:0}[8:0]	I	lane	9'h001	Controller/ 9'h001*	9’h001	
*Or as required by Ethernet PCS and controller						
pcs_mac_clk_ln_{n:0}	O	lane	Unconnected	Controller/ Unconnected*	Unconnected	
*Or as required by Ethernet PCS and controller						
pcs_mac_clk_divx0_ln_{n:0}	O	lane	Unconnected	Controller/ Unconnected*	Unconnected	
*Or as required by Ethernet PCS and controller						
pcs_mac_clk_divx1_ln_{n:0}	O	lane	Unconnected	Controller/ Unconnected*	Unconnected	
*Or as required by Ethernet PCS and controller						
pma_tx_rcv_detect_en_ln_{n:0} [3]	I	lane	1’b0			
pma_tx_rcv_detect_done_ln_{n:0} [3]	O	lane	Unconnected			
pma_tx_rcv_detected_ln_{n:0} [3]	O	lane	Unconnected			
pma_tx_deemphasis_ln_{n:0}[1:0] [3]	I	lane	3’d0		Controller	
pma_tx_deemphasis_ln_{n:0}[17:2] [3]	I	lane	16’d0			Controller
pma_tx_get_local_preset_coef_ ln_{n:0} [3]	I	lane	1’b0			Controller
pma_tx_local_preset_index_ ln_{n:0}[3:0] [3]	I	lane	4’d0			Controller
pma_tx_local_tx_coef_valid_ln_{n:0} [3]	O	lane	Unconnected			Controller
pma_tx_local_tx_preset_coef_ ln_{n:0}[17:0] [3]	O	lane	Unconnected			Controller
pma_tx_vmargin_ln_{n:0}[1:0] [3]	I	lane	2’d0		Controller	2’d0
pma_tx_vmargin_ln_{n:0}[2] [3]	I	lane	1’b0			1’b0
pma_tx_low_power_swing_en_ ln_{n:0} [3]	I	lane	1’b0			1’b0
pma_rx_termination_ln_{n:0} [3]	I	lane	1’b1			
pma_rx_eq_training_data_valid_ ln_{n:0} [3]	I	lane	1’b1			Controller
pma_rx_training_ln_{n:0} [3]	I	lane	1’b0			

Table 3: Raw SerDes Interface Pins (PIPE, Ethernet, Alternate SATA and DP Tx) (Continued)

Pins	I/O	Link/ Lane	PIPE (PCIe, USB, SATA)	Ethernet, Alt SATA	DP/eDP Tx	SRIO/ JESD204B XFI/ USXGMII
	Connectivity					
pma_rx_eq_eval_ln_{n:0} [3]	I	lane	1'b0			Controller
pma_rx_eq_eval_status_ln_{n:0} [3]	O	lane	Unconnected			Controller
pma_rx_eq_eval_complete_ln_{n:0} [3]	O	lane	Unconnected			Controller
pma_rx_link_eval_fb_dir_ change_ln_{n:0}[5:0] [3]	O	lane	Unconnected			Controller

Table 3: Raw SerDes Interface Pins (PIPE, Ethernet, Alternate SATA and DP Tx) (Continued)

[1] If controller does not drive this pin, tie low.

[2] If controller does not use this pin, leave unconnected.

[3] Pin(s) only present for PHYs configured with a full Raw SerDes interface. Ethernet and SATA only require the reduced Raw SerDes interface (connect as described when using PHY with full Raw SerDes I/F). DisplayPort Tx, SRIO and JESD204B require the full Raw SerDes interface.

[4] Used by Cadence PCIe controller as its core clock. Leave unconnected if not required by controller.

3.2 PHY configuration pins

Table 4 lists the PHY configuration input pins, which set the PHY's and each link's mode of operation. All PHY configurations must be static upon de-assertion of phy_reset_n. All link configurations are static upon de-assertion of phy_reset_n and phy_l{nn:00}_reset_n (for the link).

Pins	PHY/ link	Description
phy_link_cfg_ln_{n:0}	PHY	• Set to 1 for master lane of a link; • Set to 0 for slave lanes of a link;
phy_l{nn:00}_mode	Link	• 2'b00 for PCIe • 2'b01 for USB3 • 2'b10 for SATA (using PIPE I/F) • 2'b11 for all protocols using Raw SerDes I/F (DP, SATA, Ethernet, JESD204B, SRIO, etc.)
pma_cmn_refclk_dig_sel	PHY	Set based on reference clock configuration. See PHY and PMA specifications and Programmer's Guide for more details.
pma_cmn_refclk_mode[1:0]	PHY	
pma_cmn_refclk_int_mode[1:0]	PHY	
pma_cmn_refclk_dig_div[1:0]	PHY	
pma_cmn_pll0_refclk_sel	PHY	
pma_cmn_pll1_refclk_sel	PHY	
pma_cmn_refclk_term_en	PHY	Set based on whether there are multiple Torrent macros on the SoC and the reference clock usage between them. See the PHY and PMA specification for more details.
pma_fullrt_div_ln_{n:0}	Link	Divide value for pma_pllclk_fullrt_ln_{n:0}. Set based on usage by controller/SoC.

Table 4: PHY configuration pins

3.3 PHY miscellaneous pins

Table 5 describes miscellaneous PHY pins and their connectivity.

Pins	I/O	PHY/ link	Connectivity	Description
phy_interupt_ln_{n:0}	O	Link	SoC	Driven high (when enabled) if a link state change exceeded the configured timeout.
pma_cmn_ext_refclk_detected_cfg	I	N/A	SoC	Drive high upon de-assertion of apb_preset_n to perform RefClk detection operation.
pma_cmn_ext_refclk_detected	O	N/A	SoC	RefClk detection operation result
pma_cmn_ext_refclk_detected_valid	O	N/A	SoC	
pma_cmn_clock_stop_req	I	N/A	SoC	Tied low.
pma_cmn_clock_stop_ack	O	N/A	SoC	Unconnected.

Table 5: PHY miscellaneous pins

4 Simulation

4.1 RTL Simulation Speedup

A simulation speedup option is available for top level RTL and gate-level simulations. To enable speedup, prior to de-asserting phy_reset_n (but after de-assertion of apb_preset_n), write PHY_AUTO_CFG_SPDUP with 0x0002 (i.e. set bit 1). Upon de-assertion of phy_reset_n, the PHY will be auto-configured for speedup operation. The apb_pclk to the PHY must be free-running from the de-assertion of phy_reset_n until the PHY has completed start-up for this speedup method.

If apb_pclk cannot be configured to be free-running, then there are 2 options:

1. Following the write to PHY_AUTO_CFG_SPDUP and de-assertion of phy_reset_n, read PHY_AUTO_CFG_SPDUP until bit [3] == 1 (i.e. poll).
2. Directly write the PHY/PMA speed-up registers described in the Simulation Speedup section of the Programmer's Guide prior to the de-assertion of phy_reset_n instead of the single write to PHY_AUTO_CFG_SPDUP.

4.2 Gate-Level Simulations

In order to run a gate-level simulation, the following F/Fs in the PMA must be forced to a known state at the beginning of the gate-level simulation:

- u_pma.u_pma_rev.u_cmn.u_cmn_clkrst.u_clock_div_prog_ssm_clk. \clock_div_cnt_reg[0].Q
- u_pma.u_pma_rev.u_cmn.u_cmn_clkrst.u_clock_div_prog_ssm_clk. \clock_div_cnt_reg[1].Q
- u_pma.u_pma_rev.u_cmn.u_cmn_clkrst.u_clock_div_prog_ssm_clk.clock_div_reg.Q

4.3 Receiver Detect Simulation

It is often desired to simulate the receiver detection process in digital simulations. Unfortunately, it is not possible to model the analog effects of a receive being present in digital simulations. Functions have been added to the analog behavioral models in the transmitter to emulate a receiver being present or not in order to support these kind of simulations. The path to the analog model in this macro is:

<PMA top name>.<PMA rev name>.u_xcvr_{r,l}{4:0}.u_xcvr_ana.u_tx_ana.u_tx_driver.u_ana_tx_rcv_detect

There is an integer variable named int_transition_delay that controls this function. To emulate a receiver being present, the value of this variable must be set to at least 110_000_000. To emulate a receiver not being present, the value of this variable must be set to less than 90_000_000 for non-speedup simulations and less than 1_000_000 for speedup simulations. By default, the model is set up to behave as if a receiver is present.

5 Synthesis

Provided in the delivery are Cadence RTL Compiler synthesis scripts and constraints for the PHY (and PCS) RTL with the PMA macro. Included with the synthesis scripts is an example synthesis (netlist and result files).

5.1 PHY customer configuration options

The PHY RTL supports 2 configuration options set through ‘define:

- CDN_MPPHY_LN{1:n}_SLAVE_ONLY - This option simplifies clock tree creation/balancing and static timing by removing unnecessary master/slave MUXs for lanes that will only ever by used as a slave lane (based on phy_link_cfg_ln_*). If phy_link_cfg_ln_* for a lane will never be set high, CDN_MPPHY_LN{1:n}_SLAVE_ONLY should be defined for those lanes.
- CDN_MPPHY_LN{1:n}_MASTER_ONLY - This option simplifies clock tree creation/balancing and static timing by removing unnecessary master/slave MUXs for lanes that will only ever by used as a master lane (based on phy_link_cfg_ln_*). If phy_link_cfg_ln_* for a lane will never be set low, CDN_MPPHY_LN{1:n}_MASTER_ONLY should be defined for those lanes.
- CDN_MPPHY_PCIE_AUTO_CFG - This option adds logic to the PHY soft RTL, which automatically configures the PHY for single or multi-link PCIe operation (100 MHz reference clock with no SSC) at startup, such that no SoC APB configuration writes are required.

5.2 Clocks

Clock Name	Period (nsec)									
	PCIe	USB3	SATA	DPTx	JESD 204B	XFI/ USXGMII	1GE	2.5GE	XAUI	2X XAUI
APB_PCLK	5.0									
TAP_CLK	10.0									
REFCLK	40.0[1]									
DATART_LN[0:N]_PIPE	2.0	1.6	3.3	N/A						
PIPE_CLK_LN[0:N]	4.0	3.2	6.6	N/A						
PIPE_CLK_IN_LN[0:N][2]	2.0/4.0[3]	1.6/3.2[3]	3.3/6.6[3]	N/A						
DATART_LN[0:N]_RAW	N/A			2.46	1.939	1.55	16.0	8.0	6.4	3.2
LN[0:N]_RXCLK_PIPE	2.0	1.60	3.3	N/A						
LN[0:N]_RXCLK_RAW	N/A				1.939	1.55	16.0	8.0	6.4	3.2
LN[0:N]_RXCLK2X_RAW	N/A				0.9695	N/A	8.0	4.0	3.2	1.6
FULLRT_LN[0:N]_PIPE	2.0	1.6	3.3	1.23	1.939	1.55	2.0	2.0	3.2	3.2
FULLRT_DIV_LN[0:N]_PIPE	4.0	3.2	6.6	2.46	3.878	3.1	4.0	4.0	6.4	6.4
PSMCLK	8.643[4]									
RCVCLK	10.0[5]									

Table 6: Clock Names

[1] This value is based on either a 25 or 100 MHz reference clock input.

[2] This clock is only valid for PHYs configured for source synchronous PIPE operation.

[3] The former value is for 16-bit PIPE data width and the latter is for 32-bit PIPE data width.

[4] This is based on worst case PSM clock frequency from PMA.

[5] This is based on a 100 MHz reference clock input.

Clock names per example timing constraints (provided).

5.3 Clock Over-Constraint

No clock over-constraint is applied

5.4 Input / Output Delay Constraint

IO's are constrained relative to their clock with a delay of 0.33 of the clock period. For modeling more representative output delay due to loading cells, the standard load is taken as 50pF.

5.5 Ideal Clock Constraints (Pre CTS)

A clock uncertainty of 0.2 for setup and 0.055 for hold is defined. A clock transition of 0.04ns is applied.

5.6 Driving / Loading Cell

For more representative input delay modeling, a 4x drive strength buffer cell from the target library is used as the driving cell.

5.7 Clock Gating

There are 9 clock gating latches (outside of the hard macro), which are instantiations of the phy_clk_gate module:

u_tap_complex/u_JTAG_MACRO/TAP_CONTROLLER/JTAG_CLOCK_GATE/i_clk_gate

u_tap_complex/u_JTAG_MACRO/TAP_CONTROLLER/JTAG_CLOCK_GATE_N19/i_clk_gate

u_tap_complex/u_JTAG_MACRO/TAP_CONTROLLER/JTAG_CLOCK_GATE_N20/i_clk_gate

u_tap_complex/u_JTAG_MACRO/TAP_CONTROLLER/JTAG_CLOCK_GATE_N21/i_clk_gate

u_tap_complex/u_JTAG_MACRO/JTAG_CLOCK_GATE_BOUNDARY_UPDATEDR/i_clk_gate

u_tap_complex/u_JTAG_MACRO/JTAG_CLOCK_GATE_BOUNDARY_CLOCKDR/i_clk_gate

u_tap_complex/u_JTAG_MACRO/JTAG_CLOCK_GATE_BYPASS_CLOCKDR/i_clk_gate

u_phy_clkrst/u_gate_pipe_l0[0:n]/i_clk_gate (only for PHYs with PIPE interface)

u_phy_clkrst/u_gate_fullrt_clk_ln_[0:n]/i_clk_gate (only for PHYs with PIPE interface)

It is recommended that the phy_clk_gate module be replaced with a clock gating cell from the target library. Otherwise, latches will be inferred.

5.8 Clock MUX

The PHY RTL uses the following 2 modules as for clock tree MUX'g: phy_clock_mux.v (when selecting between functinal clocks) and phy_scan_mux.v (for scan clock insertion). It is recommended to replace these modules with desired clock MUX from target library.

5.9 Data synchronizers

The PHY RTL uses the phy_data_sync module from performing data synchronization. It is recommended to replace the phy_data_sync module with instances of the desired data synchronizer F/Fs (meta-stability hardened) from the target standard cell library.

5.10 Latch Cells

There is 1 inferred latch in the PHY RTL in the TAP controller's JTAG module:

u_tap_complex/u_JTAG_MACRO/JTAG_TDO_S_reg

This latch is required for operation of the PHY internal TAP controller. During synthesis the RC attribute 'hdl_error_on_latch' was set to false to allow synthesis to properly infer the latch.

5.11 LINT

In the phy_clock_div_sync module, blocking assignments are used in the 'synchronous always block' for the clock divider F/F (flip/flop). This is done intentionally, but it will generate a LINT error, which must be waived. Blocking assignment is used here so that RTL and gate-level simulations match. If a non-blocking assignment is used, RTL and gate-level sims will not match. The phy_clock_div_sync module is used to perform a divide by 2 clock division, where the source clock and the divided clock remain synchronous to each other. If a non-blocking assignment is used, there is a race condition that causes the simulation mismatch. Using a blocking assignment is the Cadence and industry recommended practice to resolve this race condition. This situation is described in Appendix A of Cadence app note "Resolving Race Conditions in an HDL Simulation" (available upon request).

5.12 Cross Clock Domain Timing

Each clock domain is defined in a separate clock group and is asynchronous, with the exception of DATART_LN*_PIPE and PIPE_CLK_LN* for each lane. Each lane's DATART_LN*_PIPE and PIPE_CLK_LN* are placed in the same clock group and are must be balanced with each other.

E.g. *set_clock_groups –async –name grp –group CLK1 – group CLK2*

False paths are also defined for…

Scan ports

Bump pin ports

PMA interface ports

External boundary scan control interface ports

The IO ports relating to scan were set to constant of 0, using set_case_analysis statements. They are also set as false paths for optimization.

6 Scan Insertion

Cadence Genus is used for scan insertion within the PMA hard macro [i.e. to map to scan flip-flops and connect scan chains]. PMA scan chain characteristics:

- All F/Fs on each scan chain is driven by a single scan clock.
- At the input of each scan chain, the first F/F is clocked on the rising edge of its clock. Note: Some chains contain negative edge driven F/F(s). Contact Cadence product engineering for further details.
- There is a lock-up latch at the output of each scan chain.
- There is a maximum of 128 F/Fs on a scan chain.

Refer to the provided CTL (and scan abstract) file for details regarding exact scan chain lengths, clock association and other structural attributes.

As scan is only pre-inserted for the PMA hard macro, it is up to the integrator to define the strategy for the soft IP scan insertion and connection of the PMA scan chains. PMA scan chains can be concatenated but it is recommended to keep the PMA chains separate and avoid mixing clock domains.

The following lists the PHY pins used by PMA for scan.

Scan clocks:
- scanclk_psmclk
- scanclk_refclk
- cmn_scanclk_pllclk
- cmn_scanclk_serclk
- xcvr_scanclk_serclk_ln_{n:0}
- xcvr_scanclk_pllclk_ln_{n:0}
- apb_pclk

Scan resets:
- phy_reset_n
- apb_preset_n

Scan control:
- scanmode
- scanen
- scanen_cg

Note: In the soft IP, scan MUXg is already inserted as needed.

Note: When performing scan design rule checks at the SoC level with the PHY instanced, it is possible to receive warning messages related to reset convergence in the digital test bus PHY logic. This can occur because the digital test bus muxes out internal PHY resets for observation during test and debug. However, these resets muxed onto the digital test bus are not used as resets after the muxing, as they are only data. These design rule check warnings can be ignored.

7 Reset Control

All resets are active low, asynchronously activated, and synchronously deactivated. All synchronization logic for reset is bypassed when scan is enabled as shown in *Figure 2*.

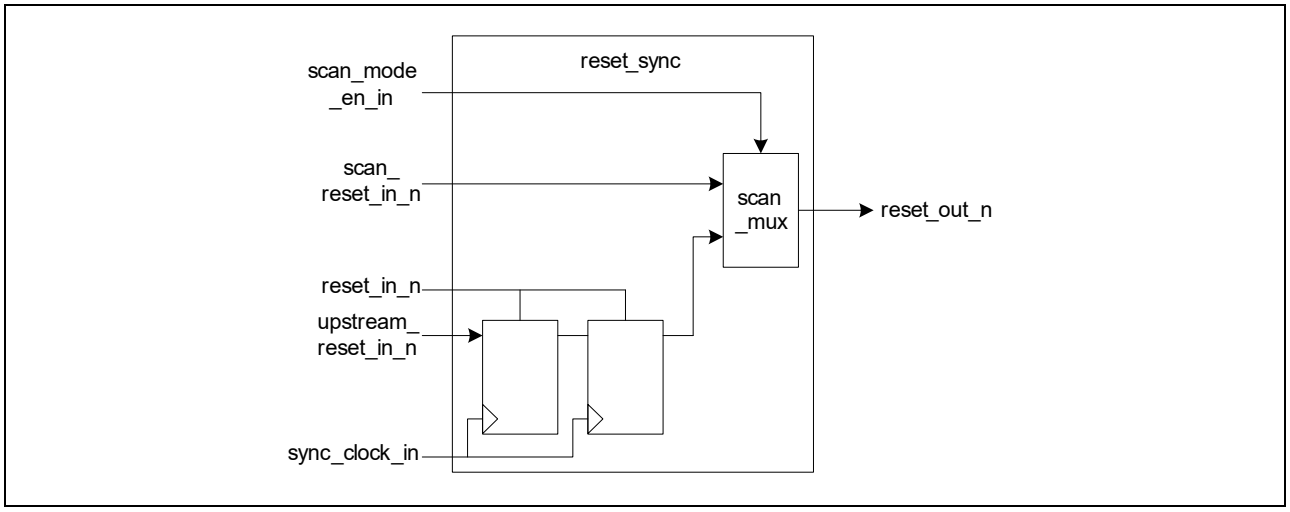

Figure 2: Scan Override on Resets

8 Logical Equivalency Checking

LEC is run between the RTL and synthesized netlist to ensure the example synthesized netlist matches the RTL provided. Cadence Encounter LEC scripts and the result files for the example netlist are provided as part of the delivery.

9 PMA (Hard Macro) Guidelines

This section provides instructions for integrating the PMA hard macro.

- The macro has internal guard rings, none need to be added at chip level
- Macro should always be placed on the edge of the die
- Nothing shall be placed over the macro, including routes, fill or devices
- Macro includes routed RDL and bumps. No RDL should be added.
- All metal layers are prefilled for metal density
- The inductor must not be filled for metal density.
- Supply isolation break layers are included in the macro
- Reference clock input receiver and ESD is part of the hard macro
- Fill blockage layers are present in the design so fill can be added at the SoC level
- One bump is removed from the macro (in Common) where the inductor is located. This must be kept open.
- Customers must maintain at least 60um OD injector spacing from any edge of the PMA macro
- No logic can be connected to PMA bumps: tx_<p/m>_ln_*, rx_<p/m>_ln_*, cmn_rext, cmn_refclk_<p/m>, *avdd* and gnd.

9.1 Process Technology

- Process technology: TSMC 12nm
- Number of layers:
  - 9 layer metal + RDL (1P9M_2Xa1Xd_h_3Xe_vhv_2Z_UT-APRDL)
  - 10 layer metal + RDL (1P10M_2Xa1Xd_h_4Xe_vhvh_2R_UT-APRDL)
  - 11 layer metal + RDL (1P11M_2Xa1Xd_h_3Xe_vhv_2Y2R_UT-APRDL)
- Poly direction: N/S
- Flip-chip implementation

9.2 PMA Structure

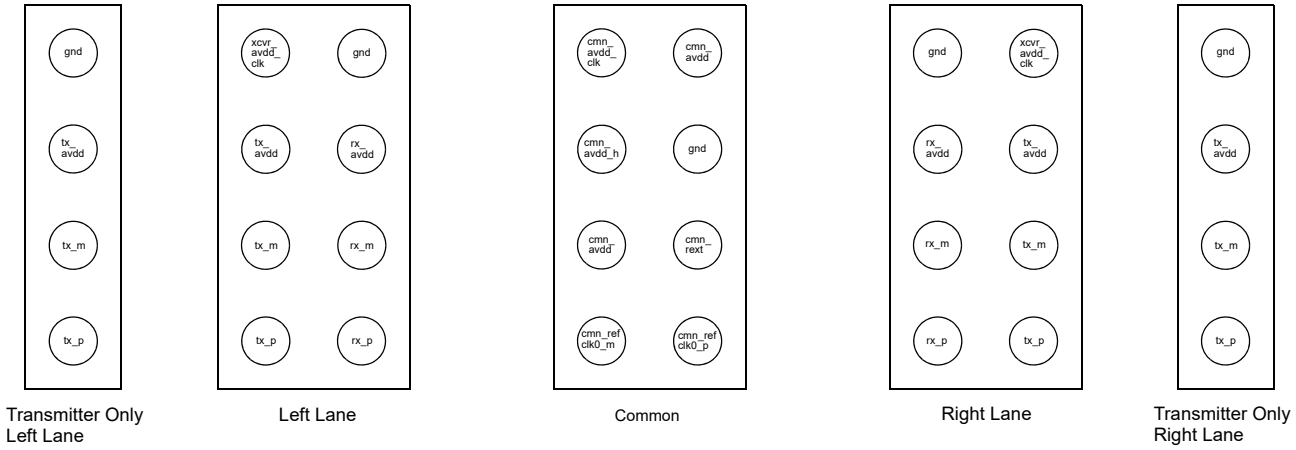

Figure 3: PMA Structure

9.2.1 Common

- Dimensions: 720um x 324um
- Area: 233,280um^2
- Bump pitch: 162um

9.2.2 Transceiver Lane

- Dimensions: 720um x 324um
- Area: 233,280um^2
- Bump pitch: 162um

9.2.3 Tx-only lane

- Dimensions: 700um x 162um
- Area: 116,640um^2
- Bump pitch: 162um

9.3 Placement Constraints

A 1.824 micron placement and routing blockage to the left and right of the macro has been included in the LEF.

9.4 Metal Fill

This macro has been filled with TSMC metal Fill utility. It passed density as delivered, but sometimes when placed in the chip, the window can change and will create failures. The user can either work with the vendor to get waivers or contact Cadence to review and provide suggestions on how to proceed.

9.5 ESD Protection

The PMA hard macro has a single ground plane. The PMA ground must be shared with SOC ground.

9.6 Reference Clock Input

Figure 4 illustrates the reference clock receiver, and its connections to an external clock driver using the reference clock bumps. Differential reference clock inputs are designed to be compatible with any commercially available crystal oscillator that drives HCSL levels.

The reference clock input should be distributed on the board through matched routes to the reference clock inputs on each PMA macro. There is no facility for internal routing of the reference clock.

The internal reference clock termination is required to be enabled for this configuration. Enabling of this termination is controlled by a PHY input (pma_cmn_refclk_term_en). If the external clock is connected to multiple macros, the termination should only be enabled in one of the macros.

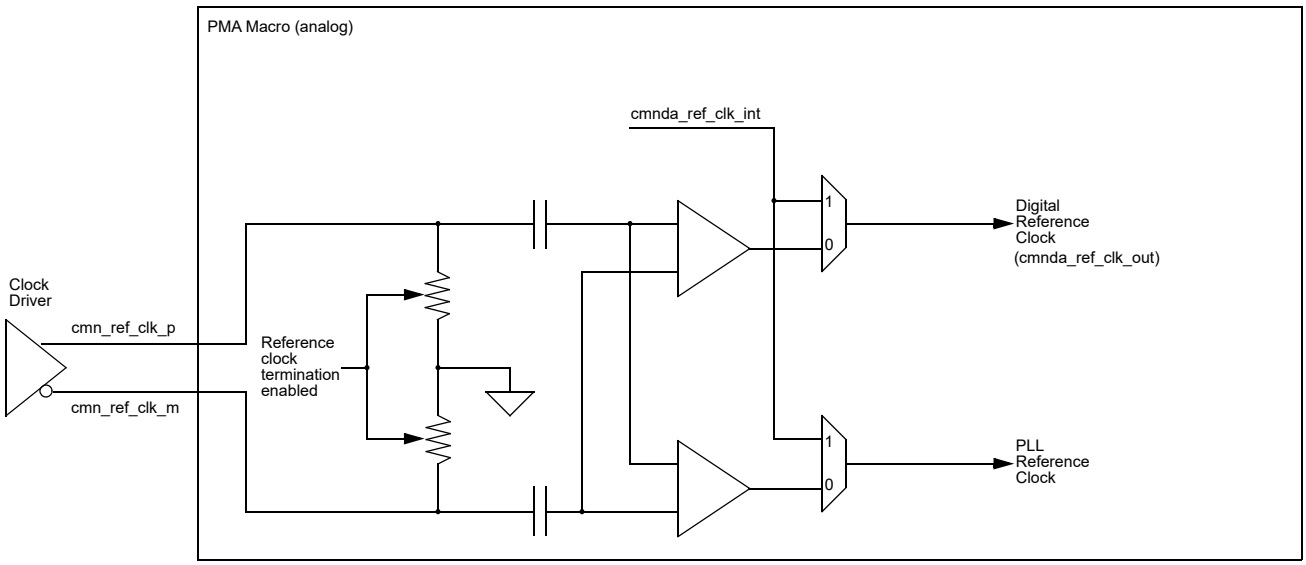

Figure 4: Differential HCSL Reference Clock Connections

9.7 External Reference Clock Requirements

- The reference clock inputs cmn_refclk_p and cmn_refclk_m are critical and should be treated the same as differential data lines for the purpose of package routing. Routing from the bumps to the PMA are part of the hard macro.
- The noise and cross talk on these lines will impact performance of the PMA and the PHY in general.
- Combined board and package capacitance should be less than 10pF per pin.
- Package traces should be routed differentially (i.e. side by side with minimal spacing). Trace lengths should match within 0.2 inches.
- Minimize exposure to nearby aggressor signals that could contaminate the clock with crosstalk.
- A differential reference clock source is strongly recommended. If a single-ended reference clock source is used, performance of the PHY cannot be guaranteed to meet the specifications.
- If the cmn_refclk_p and cmn_refclk_m bumps are not used (in other words, the internal pma_cmn_refclk_int reference clock inputs are being used instead), it is not necessary to AC couple or terminate these bumps. They can be left floating.
- When cmn_refclk_<p/m> are configured as outputs, do NOT drive a reference clock on these pins.
- In cases where the system reference clock has an amplitude of avdd + 0.1 V, this clock must be attenuated such that it is below this threshold in order to be used by this device.

9.8 Internal Reference Clock Requirements

PCS/SoC-side reference clock PMA clock pins require special handling. PMA pins cmn_ref_clk_int, cmn_ref_clk_der and cmn_ref_clk_der_n should be routed triple-wide, double-spaced with shielding. These clocks are routed on layers M9/M10 in the PMA.

Internal reference clock input cmn_ref_clk_int shall have the following clock requirements:

- Must be a CMOS signal.
- Rise-time/fall time < 30 ps for 20%-80% at worst case supply voltage.
- Maximum 60/40 duty cycle.
- Must meet the common reference clock jitter requirements per PCIe standard.

9.9 Differential Data Line Requirements

The most critical signals are the high-speed differential signal pairs for each lane of the PMA. Special care is required when routing these signals:

- The two signals in each pair (_p and _m) must be matched as closely as possible in length, capacitance and inductance.
- Impedance matched transmission lines in the package substrate are required for these signals.
- They should be kept as short as possible with a minimum of parasitic capacitance and inductance.
- Isolation between different sets of pairs should be maintained to prevent cross talk. Signal pairs should be matched between lanes to avoid introducing excessive timing skew.

9.10 External Components Required

- External AC coupling capacitors are required to be placed on the transmitter high speed serial signals.
  - AC coupling capacitors are needed for all high-speed serial lines (2 per lane).
- The macro requires an external resistor **(3.01 kohm, +/-1% tolerance)**
  - Absolute reference to allow critical internal circuits to compensate for manufacturing process variation.
  - The external bias reference resistor input is **cmn_rext**.
  - The package capacitance budget for this pin is <5 pF.
  - The trace for this pin should be made as short as possible and isolated from the high speed data signals as best as possible.
  - Parasitic resistance should be held to less than 100 ohms, where parasitic means package trace + any metal connection from bump to the device.

9.11 Power Supply Noise Tolerance

- Power supply noise <25mV pp noise.
- Internal IP noise + External supply noise.
- No single frequency component > 10mV pp.
- Includes external and self generated noise.

9.12 Power Supply Sequencing

There are no power supply sequence requirements. The power supplies can be enabled in any order. Additionally, there are no timing requirements (minimum or maximum) between powering on a power supply with respect to powering on any other power supply.

9.13 PMA Power Supply Decoupling Capacitance

cmn_avdd	165 pF
cmn_avdd_clk	70 pF
cmn_avdd_h	35 pF
<tx/rx>_avdd_ln (per lane)	425 pF
xcvr_avdd_clk_ln (per lane)	100 pF

Table 7: Decoupling Capacitance

9.14 Package Information

9.14.1 Specifications

The PMA mixed-signal macro requires good package performance to meet its specifications. *Table 8* provides the requirements for the package signal connections while *Table 9* provides differential interface details.

Note: Preference should be given to the avdd domain over the avdd_clk domain in terms of keeping the inductance low.

Parameter	Min	Typ	Max	Units/Comment
Return Loss			-14	dB at half data rate
Insertion Loss			0.5	dB at half data rate
Flipchip Supply Inductance (Ball to each Bump)	0.1		0.3	nH
Differential Impedance (nom)	90	100	110	Ohms
Single-ended Impedance (nom)		50		Ohms
Max P/N parasitic difference			10%	
R11 series parasitic resistance- signal	20		150	mOhms
C11 Parasitic capacitance - signal	1.0		1.5	pF
C12 Mutual capacitance - signal	0.2		0.7	pF
L11Parasitic series inductance - signal	0.7		2.7	nH
L12 Mutual parasitic inductance - signal	0.2		0.8	nH
L Power/Ground			0.5	nH

Table 8: Package RLC Guidelines

Differential Interface Details	Tx/Rx lanes	Reference clock
Interface Type (CML, LVDS, etc.)	CML	CML
Trace Difference Impedance (Ohms)	100	100
Impedance Tolerance (%)	10	10
Primary switching frequency (MHz)	-	156.25 (max)
Serial interface data rate (Gbps)	10.3125G (max)	-

Table 9: Package Differential Signal Guidelines

9.14.2 Power Supplies

9.14.2.1 Package Connections

The following package connections must be followed to maintain high performance:

- Analog macro supplies are separated on the die to improve isolation and performance.
- A separate package power plane for xcvr_avdd_clk_ln_[n:0] is required. This is a clean analog core voltage supply and is critical to low jitter performance.
- <cmn/xcvr>_avdd_clk_ln_[n:0] supplies should not be tied to digital supplies of the same voltage in the package.
- All other avdd (non avdd_clk) supplies can be tied to a common logic digital supply of the same voltage on the board with proper filtering applied.
- cmn_avdd_h (analog IO voltage) may be routed as a signal if absolutely necessary, but should be thick and have multiple balls to minimize impedance.
- Implementations are acceptable where all grounds (analog and digital) are tied together in the package, but supplies are given separate planes as described above.
- Line supplies can be tied together in the package. For example, <tx/rx>_avdd_ln_[n:0] (all of which are part of the avdd domain) can be connected together on a single plane in the package. Likewise, cmn_avdd_clk and xcvr_avdd_clk_ln_{n:0} (both of which are part of the avdd_clk domain) can be connected in a single package plane.

- PMA power domains *_avdd and *_avdd_clk **must** be derived from the same power supply source. These signals may be tied on the PCB, but they cannot be sourced from independent supplies.

Macro Bump Name	Description
gnd	Shared ground for the entire macro.
cmn_avdd	Analog power for non high speed clock and digital functions.
cmn_avdd_clk	Clean analog power for high speed clock applications.
cmn_avdd_h	High voltage power for the bias and parts of the PLL.
<tx/rx>_avdd_ln_{n:0}	Analog power for non high speed clock and digital functions.
xcvr_avdd_clk_ln_{n:0}	Clean analog power for high speed clock applications.

Table 10: PMA Power and Ground Bump Details

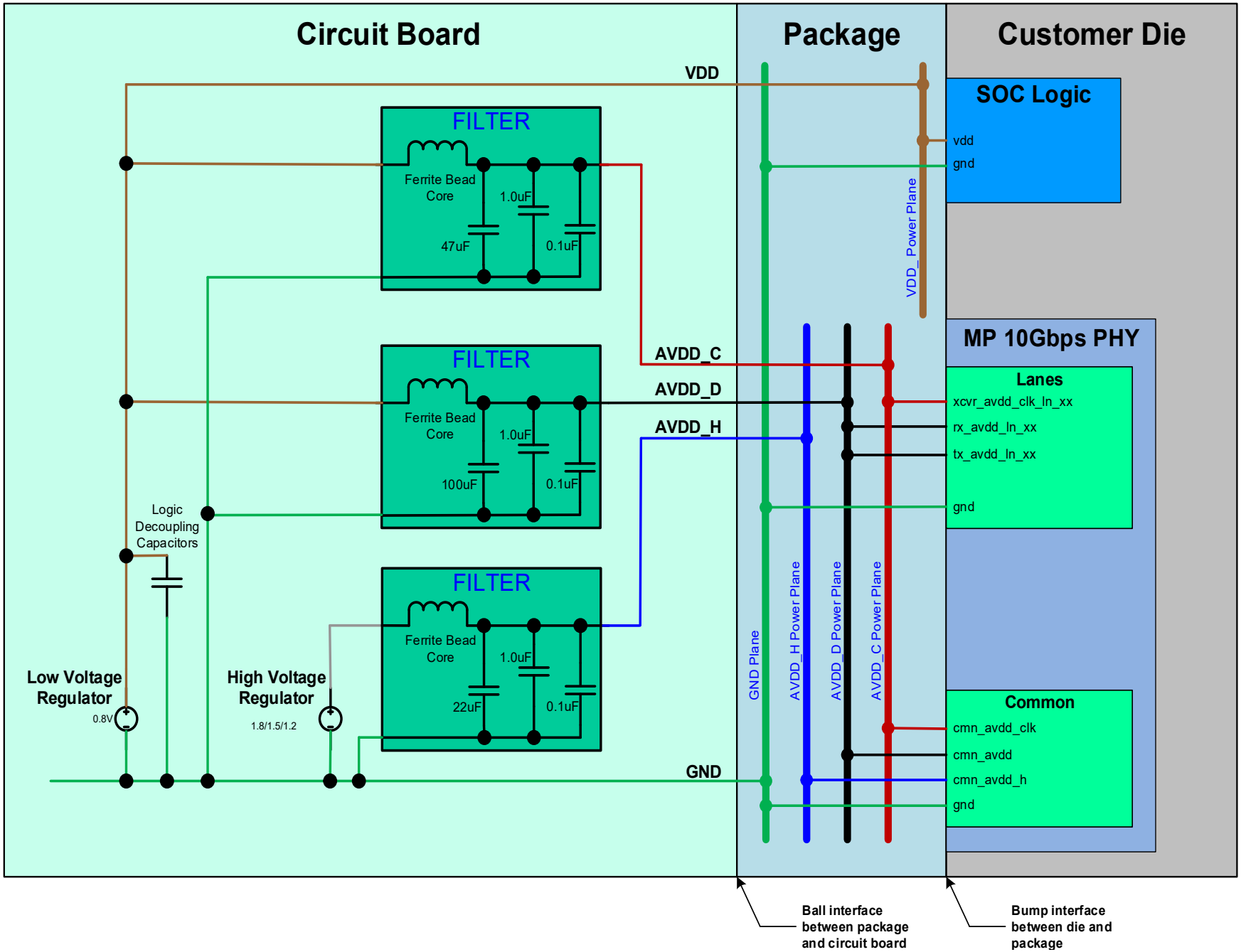

Figure 5: Power and Ground Connections in Package

9.15 SoC Side PMA ATB Pins

9.15.1 ESD Protection Requirements

There is no ESD protection provided internally to the Torrent 12FFC Multi-protocol PHY IP on the PMA cmn_atb_core_<1/0> pins (pma_atb_core_<1/0> at the PHY). If these pins are connected to SoC pins, it is the responsibility of the customer to provide adequate ESD protection at the chip level, as is illustrated in the figure below.

At the chip level, the bump or bumps associated with the cmn_atb_core_<1/0> pins require:

- Core supply power clamp
- (optional) Power/ground diode
- Primary IO ESD protection diodes
- Secondary ESD protection element

The ESD protection elements should be powered from an appropriate core voltage supply. That supply may be the same or different than the cmn_avdd of the PMA, which is what powers the internal ATB-related circuitry connected directly to the cmn_atb_core_<1/0> pins.

The type and specifications for the ESD protection elements listed above, as well as requirements for all relevant bus resistances should be consistent with the requirements specified in the Layout Guidelines for Latch-UP and I/O ESD chapter of the 16ff TSMC Design Rule Manual.

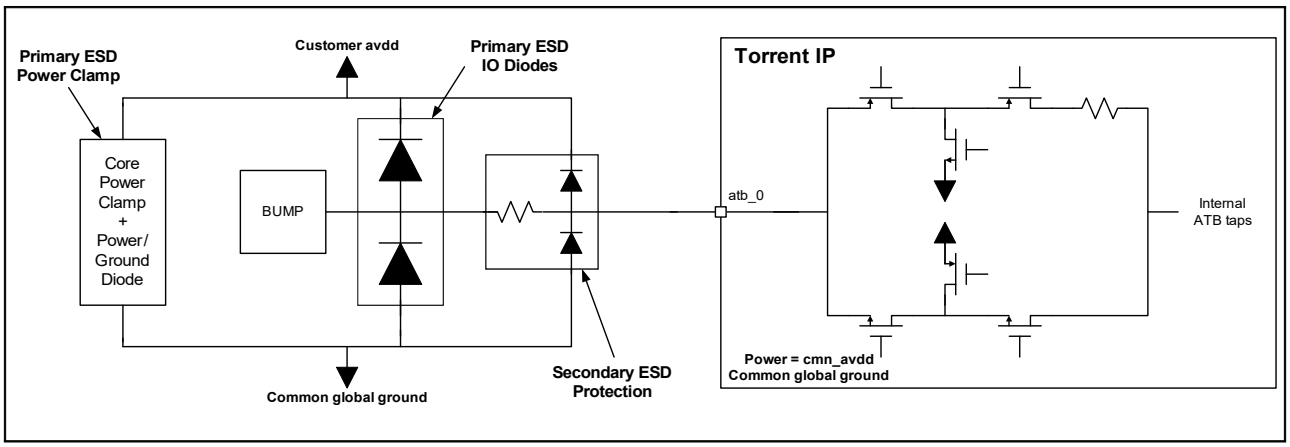

Figure 6: SoC Side PMA ATB Pins

9.15.2 ATB_Core_<0/1> Pin Usage

atb_core_<0/1> will drive high impedance (Z) when PMA register CMN_DIAG_ATB_CTRL1[1] is 0. When CMN_DIAG_ATB_CTRL1[1] is 1, atb_core_<0/1> will drive the selected ATB test point as configured in CMN_DIAG_ATB_CTRL2.

10 PHY Clock Description

10.1 Torrent 12FFC Multi-protocol PHY Clock Diagrams

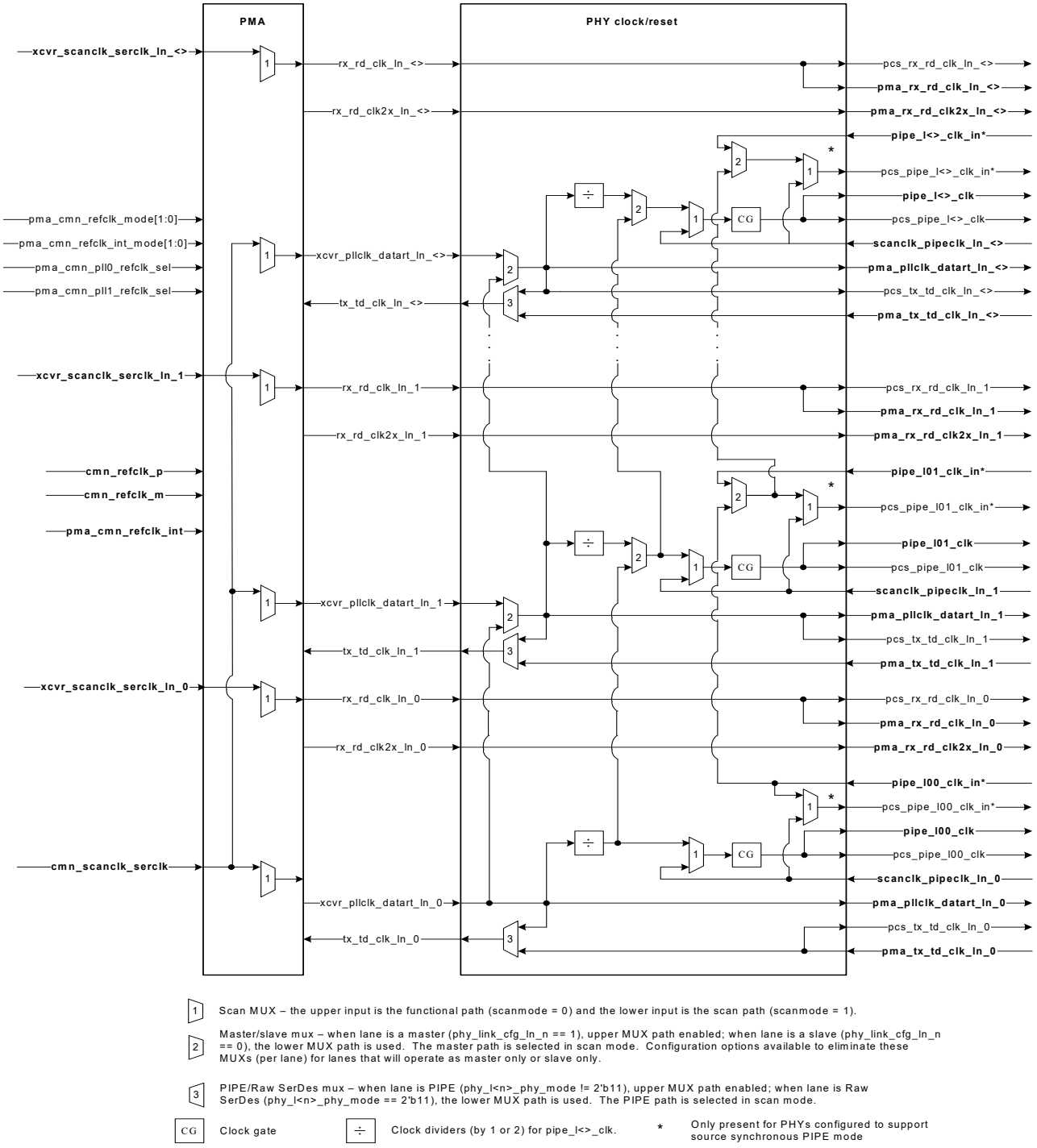

Figure 7: Data Rate clock diagram

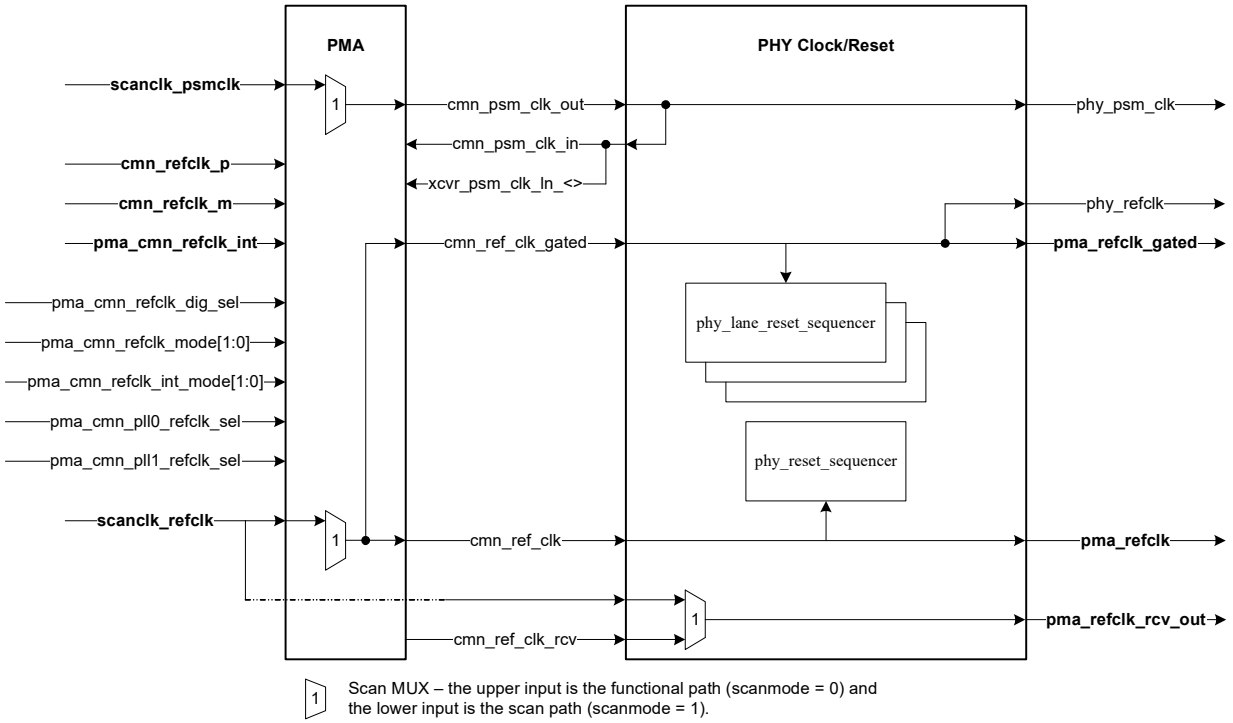

Figure 8: Reference and PSM clock diagram

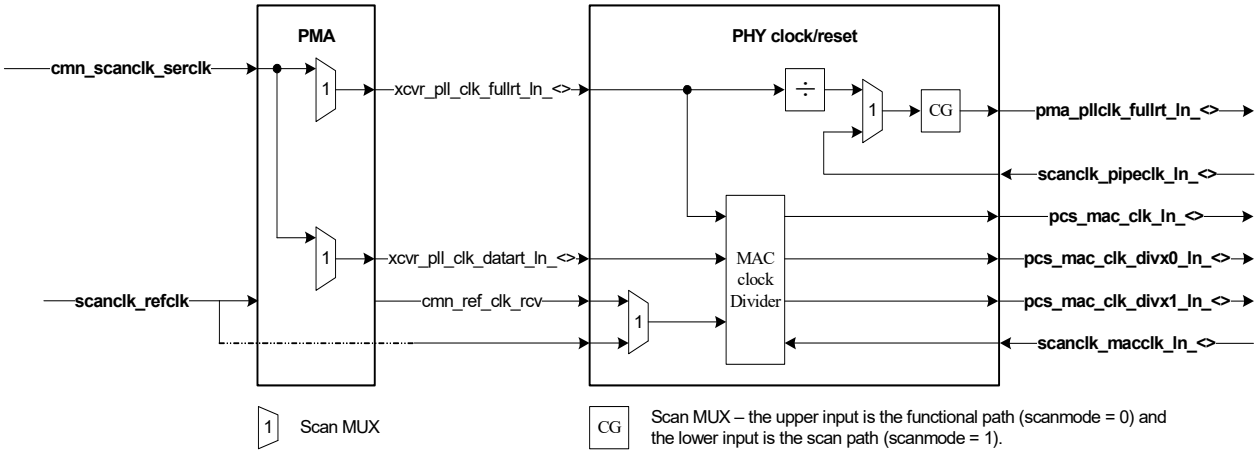

Figure 9: Full rate and MAC clock diagram

10.2 Clock Skew Requirement between tx_td_clk_ln_<> in a multi-lane link

The PMA's tx_td_clk_ln_<> clock inputs for lane's in a multi-lane link are driven by xcvr_pll_clk_datart_ln_<> PMA clock output for the master lane of the link. The maximum skew between the tx_td_clk_ln_<> clock inputs for all lane's in a multi-lane link is 200 ps (for functional mode only).

10.3 Clock Skew Requirement between cmn_psm_clk_in and xcvr_psm_-clk_ln_<>

The PMA's cmn_psm_clk_in and xcvr_psm_clk_ln_<> clock input is driven from cmn_psm_clk_out clock output. The maximum skew between cmn_psm_clk_in and xcvr_psm_clk_ln_<> PMA clock inputs is 200 ps (for functional and scan modes).

PMA clock input skew requirements are reflected in the hard macro Liberty timing models. However, any failure will not be reported in a standard timing report, as these are not setup/hold violations. To view any violations, a separate report timing command for skew must be included. For Cadence Tempus, this is reported with "report_timing -check_type skew" command.

10.4 Frequency Information

10.4.1 Functional clocks

Clock	Clock frequency (MHz)									
	PCIe	USB3	SATA	DPTx	JESD 204B	XFI/ USXGMII	1GE	2.5GE	XAUI	2X XAUI
Reference clock (in) (typ)	100/19.2/24/25/27					156.25	125/100/19.2/24/ 25/27		156.25/100/ 19.2/ 24/25/27	
pma_refclk_rcv_out (out) (typ)	100/19.2/24/25/27					156.25	125/100/19.2/24/ 25/27		156.25/100/ 19.2/ 24/25/27	
pipe_l*_clk (out) (16-bit PIPE) (max)	500	625	300	N/A						
pipe_l*_clk (out) (32-bit PIPE) (max)	250	312.5	150	N/A						
pipe_l*clk_in (in) (16-bit PIPE) (max)	500	625	300	N/A						
pipe_l*clk_in (in) (32-bit PIPE) (max)	250	312.5	150	N/A						
pma_pllclk_datart_ln_* (out) (max)	N/A			405	515.625	644.55	62.5	156.25	156.25	312.5
pipe_pllclk_fullrt_ln_* (out) (max)	500	625	300	810	1031.25	644.55	500		312.5	
pma_rx_rd_clk_ln_* (out) (max)	N/A			405	515.625	644.55	62.5	156.25	156.25	312.5
pma_tx_td_clk_ln_* (in) (max)	N/A			405	515.625	644.55	62.5	156.25	156.25	312.5

Table 11: PHY functional clocks

See PMA specification for additional information.

10.4.2 PMA Output Clock Constraints

Clock	Max Duty Cycle	Max Period Jitter (ps)
pma_refclk_rcv_out	40/60	40
pma_pllclk_datart_ln_*	45/55	35
pma_pllclk_fullrt_ln_*	45/55	35
pma_rx_rd_clk_ln_*	50/50 (16-bit mode) 40/60 (20-bit mode)	20 20

Table 12: PHY output clock constraints

11 Production Test Strategy

Implementation of a JTAG TAP and boundary scan logic is present in the PHY, and scan insertion may be performed on the tap_tck clock domain at the discretion of the customer. If the tap_tck clock domain logic is scanned, then the tap_tck clock input on the PHY must be scanned controlled, with the proper clock muxing implemented at the SoC level. It is recommended that the customer implement the scan muxing as close to the clock source as possible.

As with the tap_tck, the apb_pclk must be scan controlled by the customer at the SoC level.

ATPG and verification of all test patterns in verilog replay format with SDF annotation should be completed.

11.1 SCAN

The macro consists of standard cell logic, which will primarily be tested through scan techniques. Implementing scan flip-flops in these blocks is a proven test methodology to ensure high fault coverage for single stuck-at faults (SSF), transition and delay fault testing.

The scan implementation is such that the PMA has independent scan chains. Lockup latches are added internally, where applicable, and also at the end of each scan chain. The scan chains of the macro can be combined, at the SoC interface, with scan chains for the SoC in which the macro is instantiated. Scan chains have been inserted on a per clock domain basis.

The “at speed” test strategy will be achieved by using the clock pins on the assumption that at least two consecutive functional clock pulses are generated in response to a trigger event generated by the ATE or clock generator circuits at the SoC level. If the internal JTAG macro is not to be scanned, do not cycle tap_tck.

11.2 Coverage

The test coverage is calculated from ATPG patterns run on the full scan portions of the design by Encounter Test (ET). The target test coverage for the Torrent 12FFC Multi-protocol PHY is 99% Global static and 80% Test Mode at-speed assuming no design limitations. However, for this PHY, the coverage is approximately 95% Global static and 88% Test Mode at-speed, depending on PHY configuration. This gap between the target and actual static coverage results largely from the use of isolation and low power features in the design, along with the use of retention flops. These structures are not fully tested via structural ATPG. Provided HVM tests with this PHY can be used to supplement the coverage of these design features. The coverage figure will be calculated using the following formula:

$$\frac{\text{\# Detected Faults}}{\text{\# All Testable Faults}} \times 100\%$$

Figure 10: Coverage Formula

11.3 Analog

All analog will be disabled during scan testing upon assertion of scanmode. A set of tests are provided for testing the analog logic. These tests utilize the internal TAP controller with PHY and PMA isolation logic.

11.4 Scan Clocks / Resets

Resets are controlled by a top level I/O phy_reset_n, apb_preset_n and tap_trst_n.

Scan clock muxing pre-exists in the PMA and during scan, all scan clocks pass through to the PCS and are controllable from macro pins. The existing clock muxing simply switches between the functional and test clock.

Clock	Clock frequency (MHz)									
	PCIe	USB3	SATA	DPTx	JESD 204B	XFI/ USXGMII	1GE	2.5GE	XAUI	2X XAUI
scanclk_psmclk	125									
scanclk_refclk	Based on reference clock frequency used and PMA configuration used with this reference clock (i.e. value of pma_cmn_refclk_div_div[1:0])									
cmn_scanclk_pllclk	500	625	300	405	515.625	644.55	500	500	312.5	312.5
cmn_scanclk_serclk	500	625	300	405	515.625	644.55	62.5	156.25	312.5	312.5
xcvr_scanclk_serclk_ln_*	500	625	300	405	515.625	644.55	62.5	156.25	312.5	312.5
xcvr_scanclk_pllclk_ln_*	500	625	300	405	515.625	644.55	500	500	312.5	312.5
scanclk_pipeclk_ln_* (32-bit PIPE)	250	312.5	150	N/A						
scanclk_pipeclk_ln_* (16-bit PIPE)	500	625	300	N/A						
scanclk_macclk_ln_*	N/A						As needed by Ethernet PCS and MAC			

Table 13: PHY scan clocks

Please note only the <>_ln_* scan clocks may be driven from a common source (for each scan clock). For example, each lane's xcvr_scanclk_serclk_ln_* scan clock input can be driven from a common source. Similarly, each lane's xcvr_scanclk_pllclk_ln_* (or scanclk_pipeclk_ln_* or scanclk_maclk_ln_*) scan clock input may be driven from a common source. Besides these exceptions, each scan clock input must be driven by a separate source to prevent asynchronous logic being seen in scan as synchronous.

11.5 JTAG

A JTAG TAP and Boundary Scan Register compliant with IEEE 1149.1 and 1149.6 is implemented in the device.

There are two boundary scan control options available to use in this macro through the internal TAP controller or through an external TAP controller. The internal boundary scan registers in this macro can be controlled directly through the PHY's internal TAP controller. Alternatively, the internal boundary scan registers in the macro can be controlled by an external TAP controller through an external boundary scan interface. These modes of operation are selected using the following pin settings:

- For enabling INTERNAL bscan control set the following signals:
  - xcvr_bscan_mode_en = 1
  - bscan_ext_select = 0
- For enabling EXTERNAL bscan control set the following signals:
  - xcvr_bscan_mode_en = 1
  - bscan_ext_select = 1

DC Parametric testing of the digital I/O pads can be performed using the Boundary Scan Register in EXTEST mode. Encounter Test automatically generates two pattern files, one to exercise outputs, the other sensitive to input states.

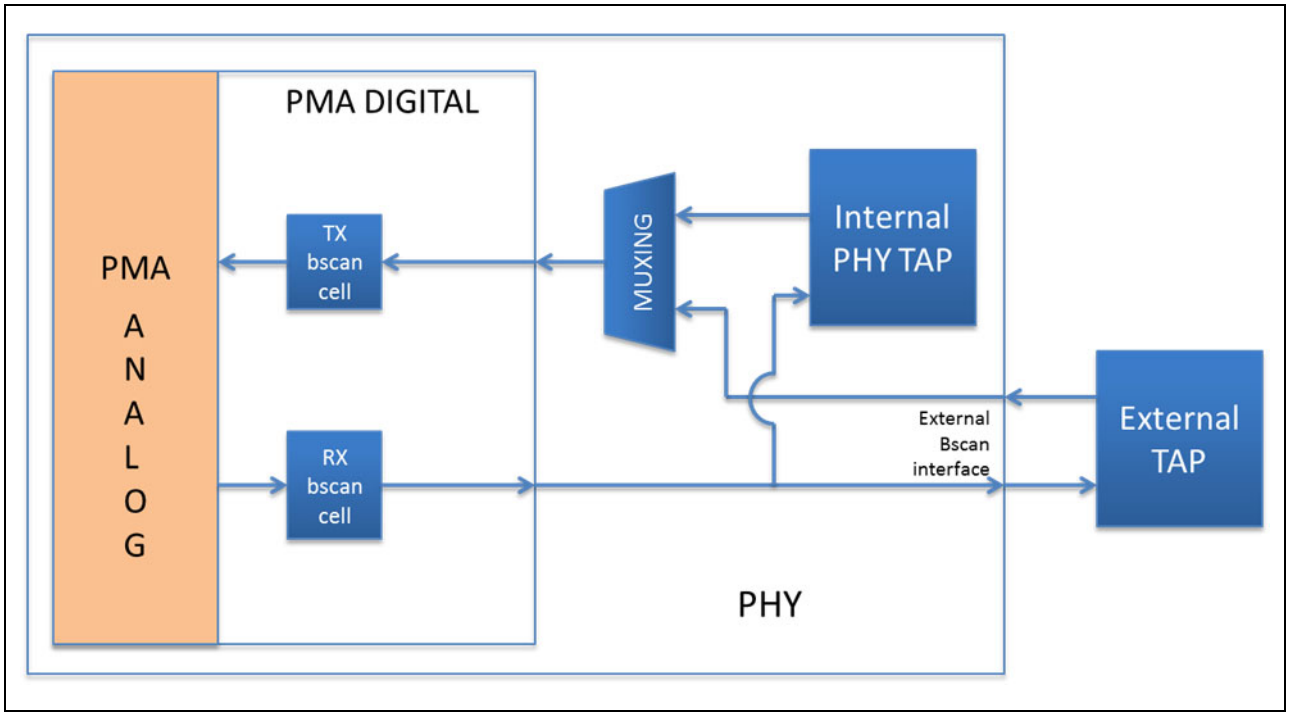

Figure 11: Boundary Scan Interface

The TAP controller will also support numerous additional private instructions over and above those that are deemed mandatory by the standard. These additional private instructions will be used to configure and control the device during the various other tests that are implemented.

As seen in *Figure 12*, each PMA lane contains tx_bscan_tdi, tx_bscan_tdo, rx_bscan_tdi and rx_bscan_tdo pins. Within each lane, the rx_bscan_tdo output is connected to the tx_bscan_tdi input. Between adjacent lanes, the tx_bscan_tdo output is connected to the rx_bscan_tdi_input. Lane 0's rx_bscan_tdi and the leftmost lane's tx_bscan_tdo are connected to the internal TAP controller or the external boundary scan interface. The boundary scan control signals are MUX'd between the internal TAP controller and the external boundary scan interface.

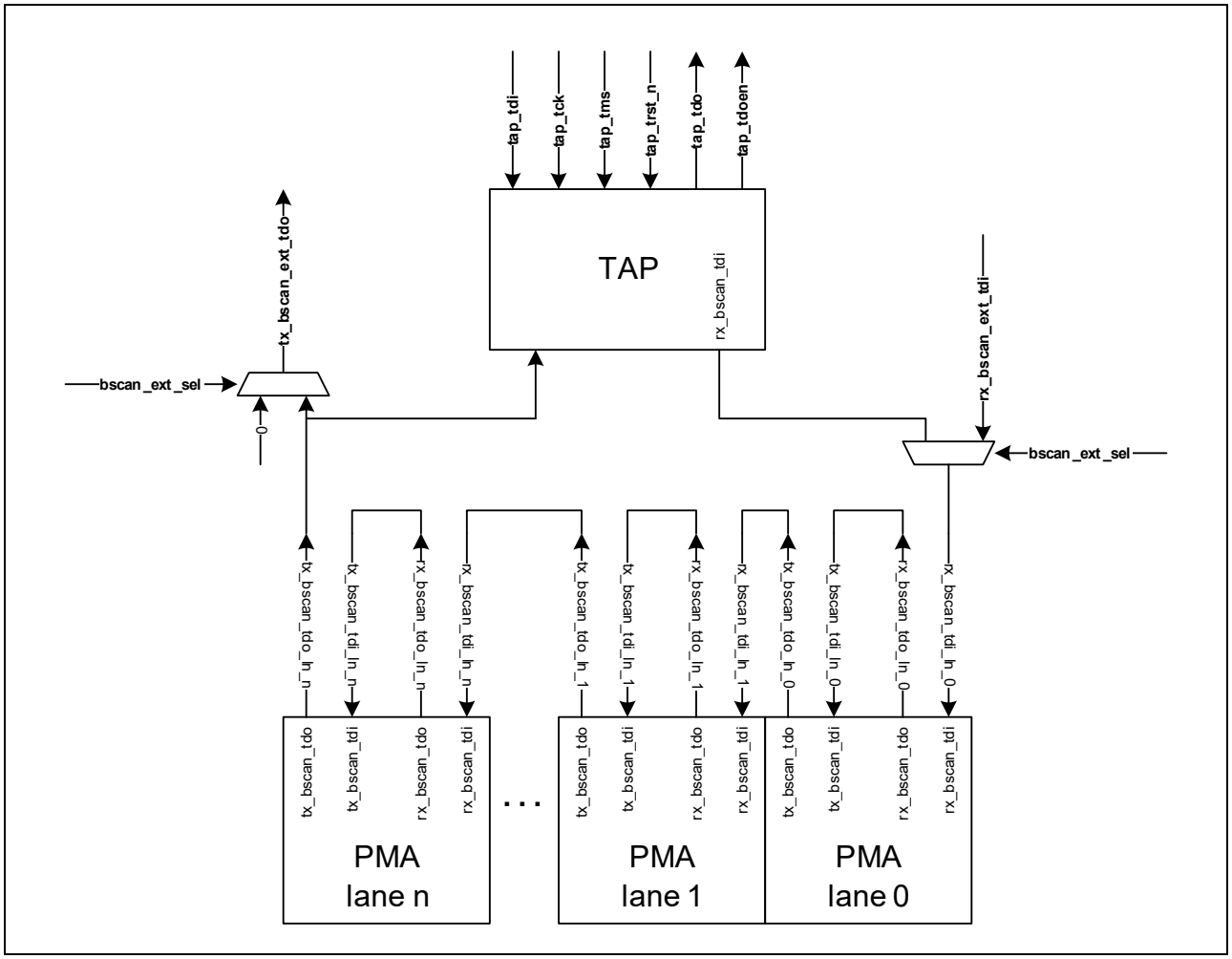

Figure 12: PHY BSCAN TDI/TDO Connections

11.6 Supported JTAG Instructions

IEEE 1149.1 Commands (Primary TAP control)		
BYPASS	4’b1111	Bypass register selected
EXTEST	4’b0000	external test mode – drive from boundary scan
SAMPLE	4’b0001	Sample boundary scan chain
PRELOAD	4’b0010	Preload/unload boundary scan chain
IEEE 1149.6 Commands (Primary TAP)		
EXTEST_PULSE	4’b0100	AC-JTAG EXTEST Pulse
EXTEST_TRAIN	4’b0011	AC-JTAG EXTEST Train
Other User defined (Custom) Instructions		
CUSTOM_INSTR_1	4’b0101	PHY macro diagnostic control register
CUSTOM_INSTR_2	4’b0110	PHY macro diagnostic APB access address register
CUSTOM_INSTR_3	4’b0111	PHY macro diagnostic APB access write data register
CUSTOM_INSTR_4	4’b1000	PHY macro diagnostic APB access read data register
CUSTOM_INSTR_5	4’b1001	PHY macro diagnostic APB access control register
CUSTOM_INSTR_6-10	4’b1010 to 4’b1110	RESERVED

Table 14: Supported JTAG Instructions

11.7 Abstract BSDL

Based on the existing connections in *Figure 12*, the abstract bsdl is as follows: -

- "0 (BC_ENAB_NT, *, INTERNAL, X)," &
- "1 (BC_11496_OUT, tx_p_ln_1, OUTPUT2, X)," &
- "2 (BC_11496_ACTR, rx_m_ln_1, OBSERVE_ONLY, X)," &
- "3 (BC_11496_ACTR, rx_p_ln_1, OBSERVE_ONLY, X)," &
- "4 (BC_IN, rx_p_ln_1, INPUT, X)," &
- "5 (BC_ENAB_NT, *, INTERNAL, X)," &
- "6 (BC_11496_OUT, tx_p_ln_0, OUTPUT2, X)," &
- "7 (BC_11496_ACTR, rx_m_ln_0, OBSERVE_ONLY, X)," &
- "8 (BC_11496_ACTR, rx_p_ln_0, OBSERVE_ONLY, X)," &
- "9 (BC_IN, rx_p_ln_0, INPUT, X)" ;

Cadence to standard boundary scan cell mapping for boundary scan cells used in PMA:

- BC_11496_OUT - AC_2
- BC_11496_ACTR - BC_4
- BC_IN - BC_3
- BC_ENAB_NT - BC_5

11.8 Boundary scan

The intention of the boundary scan features in this part of the design is to use AC-JTAG mode. The reason for this is due to the fact that standards such as PCIe Gen 3 and IEEE 802.3 specify that the high speed I/Os use AC coupling capacitors. The DC boundary scan function can be used, but this function can only be used in an environment where the AC coupling capacitors are not present. In addition to this, the tester environment is required to be able to drive the receiver input pins (rx_p_ln_{7:0} and rx_m_ln_{7:0}) with a minimum voltage swing of +300 mV to -300 mV.

The PMA hard-IP implements AC-JTAG (IEEE 1149.6) for the differential receivers that make up the RX pins for each lane, and provides a means to supply an AC-JTAG signal to the TX pins.
Operation is divided into two modes: DC-JTAG and AC-JTAG:

11.8.1 DC-JTAG

When operating in cooperation with IEEE 1149.1, transmit and receive data to and from the drivers and receivers are accessible by asserting txda_bscan_ce. The receive data is shipped into the boundary scan cell via the signal rxda_b-scan_[ztp/ztn], and transmit data goes from the boundary scan cell to the driver via txda_bscan_a.

All this is in compliance with IEEE 1149.6, which states that AC pins must appear as DC pins when 1149.1 commands are used.

11.8.2 AC-JTAG

For AC-JTAG commands (EXTEST_PULSE, EXTEST_TRAIN), AC receivers must be able to detect edges, and therefore employ special test receivers. The PMA test receivers can detect either levels or edges.

For each transmitter and receiver, a boundary scan cell is implemented. To support AC-JTAG, the TAP controller implements the necessary additional commands to generate pulses and pulse trains at differential transmitters, and the additional control signals to enable receivers to detect signal edges rather than levels (level detection is the fall-back mode used in 1149.1-type testing).

Refer to the reference document *Torrent 12FFC Multi-protocol PHY - PMA Specification* for more information.

11.9 Supported ATPG Flow

Internal Cadence ATPG and verification is performed using an SDC flow for producing patterns that will simulate without mismatches. Third party tools widely support this type of ATPG flow that leverages SDC files that already exist for static timing purposes in order to apply proper masking for simulation and on ATE. Cadence provides collateral in support of this SDC flow to perform the vast majority of any necessary masking. In addition, ignore measures (or capture masks) may also be included as a supplement to apply capture masks to nodes that are not completely masked by the SDC files. Once this IP is integrated into a design, it is expected that an SDC type flow will be used, and the delivered collateral will be applied. A flow that uses only specific capture masks to perform all necessary masking is not recommended, as it is far less efficient and much more effort to implement.

12 Loopback Modes (PMA)

Several serial and parallel loopback modes are supported by the PMA and PCS. The loopback modes for the lanes are intended to support various manufacturing, characterization and debug tests. These modes are described in the following sections. Refer to the reference document *Torrent 12FFC Multi-protocol PHY - PMA Specification* for more information.

12.1 Serial Loopback Mode

Serial loopback is a Tx-to-Rx near-end loopback mode. The loopback function takes place in the analog components of the lane. The serial loopback mode routes data from the transmit path back into the receive path. The data crossover happens immediately before the driver, where data is shipped serially from the transmit path into the clock recovery and deserialization circuitry of the receive path. This loopback mode stresses a large portion of the overall macro using lower speed parallel data input, and without requiring components outside of the chip. Data can be provided from either of 2 sources: the PHY's PIPE interface or internal PMA BIST.

12.2 ISI Generation Loopback Mode

ISI generation loopback is a Tx-to-Rx near-end loopback mode. The loopback function takes place in the analog components of the lane. The ISI generation loopback mode routes data from the driver output through the ISI generation loopback filter, then back into the receiver. This loopback mode stresses a large portion of the overall macro using lower speed parallel data input, and without requiring components outside of the chip. Data can be provided from either of 2 sources: the PHY's PIPE interface or internal PMA BIST.

Note: This mode is only valid for full-transceiver lanes and not supported for Tx-only lanes.

12.3 Line Side Loopback Mode

Line side loopback is a Rx-to-Tx far-end loopback mode. The loopback function takes place in the analog components of the lane. The line side loopback mode routes the data, generated outside the chip, from the receiver and feeds it directly into the driver. The data is not re-clocked or re-timed, but does go through the receiver equalization circuitry. This mode is purely an analog loopback mode. Note, even though the bulk of the macro is not operating in this mode, the macro must still be in power state A0 to function correctly. Typical sources for the data input include high-speed pattern generators and SerDes transmitters.

Note: This mode is only valid for full-transceiver lanes as this is a Rx-to-Tx loopback mode.

12.4 Far End Parallel Loopback Mode

Far end parallel loopback is a Rx-to-Tx far-end loopback mode. The loopback function takes place in the digital components of the lane. In far end parallel loopback mode, the external data goes through the entire analog portion of the receive path. Inside the digital components, the parallel data from the receive path is injected into the parallel data stream of the transmit path. As in the case of the receive path, the entire analog portion of the transmit path is covered in this loopback mode. Note that when in far end parallel loopback mode, the clock for the transmit parallel data is internally driven by the clock for the receive parallel data. Note that when far end parallel loopback mode is enabled, there must be a 0 PPM offset between the device providing data to the receiver and the macro. This requirement is necessary because the transmitter sample FIFO is not deep enough to handle PPM offsets. There is no requirement for the devices to be phase aligned. Additionally the tx_reset_n must be toggled to reset the TX sync FIFO pointer after the power state reaches A0, since the receiver recovered clock will not have stabilized until then due to calibrations taking place. Typical sources for the data input include high-speed pattern generators and SerDes transmitters.

Note: This mode is only valid for full-transceiver lanes as this is a Rx-to-Tx loopback mode.

12.5 Near End Parallel Loopback Mode

Near end parallel loopback is a Tx-to-Rx near-end loopback mode. The loopback function takes place in the digital components of the lane. In near end parallel loopback mode, the data path is completely in the digital part of the design. Inside the digital part of the design, the parallel data from the transmitter is injected into the parallel data steam of the receiver data path. Note that none of the analog data path is covered in this loopback mode. Also note that when in near end parallel loopback mode, the clock for the receiver parallel data is internally driven by the clock for the transmitter parallel data. Data can be provided from either of 2 sources: the PHY's PIPE interface or internal PMA BIST.

Note: This mode is only valid for full-transceiver lanes and not supported for Tx-only lanes.

12.6 Recovered Clock Loopback Mode

For recovered clock loopback only the recovered Rx clock loops back to the Tx. The Rx data is not looped back to the Tx. The loopback function takes place in the analog components of the lane. The recovered clock loopback routes the recovered clock from the receiver and feeds it directly into the driver. The transmit data (clock signals) is not re-clocked or re-timed.

Note: This mode is only valid for full-transceiver lanes as this is a Rx-to-Tx loopback mode.

13 PMA BIST

The PMA hard macro provides Tx and Rx BIST functionality. For Tx, 4 PRBS patterns (PRBS7, PRBS15, PRBS24 and PRBS31) are available, plus a FIFO which can be filled with user-defined data. For Rx, the BIST pattern (user-defined or PRBS) is synchronized to and then checked for errors. Refer to the reference document *Torrent 12FFC Multi-protocol PHY - PMA Specification* for a detailed description.

13.1 Usage Overview

PMA BIST can be driven via either the APB interface or JTAG as described in *Torrent 12FFC Multi-protocol PHY - PHY Specification.*

The following are the steps that are necessary to initiate the BIST process: -

- Any design specific functions that need to be configured in order for the BIST to function in a given design, must be configured for each instance where the BIST modules are used (driver enables, receiver enables, clock enables, etc.). The following steps provide a guide to dut setup: -
  - Put the PHY into PMA isolation mode (via PHY macro diagnostic control register)
  - Reset PMA
  - Set standard mode and data width for data rate
  - Setup transceiver controls to enable lanes but in electrical idle
  - Release reset
  - Set power state request e.g A0
  - De-assert transceiver control electrical idle to begin transmission
- If the BIST function is intended to be run with a design specific loopback function, enable this function.
- Determine the BIST mode that will be used, and set the respective Tx and Rx BIST modes to the selected mode (as described in the PMA spec)
- If the user defined data function is selected, fill the TX and RX BIST user defined data FIFOs with the desired data patterns.
- Initialize the device that is using the BIST logic, such that all required supporting functions are activated, and the BIST modules are reset and released from reset when BIST data can be generated and checked. This is a design specific event (power up sequence, reset, etc.). After this point, the device should be ready to transmit and receive data (either functional or BIST).
- Enable the receiver BIST module by activating the Rx BIST enable register bit, and the transmitter BIST module by activating the Tx BIST enable bit. It does not matter what order this is done in.
- The receiver BIST logic being used, will at some point activate its rx_bist_sync signal indicating it has synced to the data being received.(PHY_PMA_XCVR_CTRL register)
- At this point, errors can be inserted from the transmit BIST logic, and checked with the receive BIST logic.

14 Isolation Mode Test Sequence Descriptions

14.1 Enable PHY in PHY Isolation Mode with each Lane as its own Link (PIPE PCIe mode)

1. Write 0x0000 to PHY_ISO_CMN_CTRL. (Clear phy_reset_n isolation bit to 0, so that the PHY will be in reset upon enabling PHY isolation mode.)
2. Write 0xC0FF to PHY_PMA_ISOLATION_CTRL. (This enables PHY isolation mode.)
3. Write 0xA000 to PHY_PMA_ISO_CMN_CTRL. (Asserts RefClk termination enable and RefClk digital divider value.)
4. Write 0x9000 to PHY_ISO_LINK_CFG. (Configure each lane as its own link.)
5. Write 0x0C21 to PHY_PCS_ISO_LINK_CTRL (for each lane). (Configures each link for PCIe Gen1.)
6. Write 0x0010 to PHY_PCS_ISO_TX_CTRL (for each lane). (Sets pipe_tx_elec_idle bit to 1, as specified in PIPE spec upon startup.)
7. If performing Tx/Rx BIST and/or eye surf, enable PMA diagnostic power island per sequence described in programmers guide.
8. Write 0x0001 to PHY_PCS_ISO_CMN_CTRL. (De-asserts phy_reset_n.)
9. Read PHY_PCS_ISO_LINK_CTRL (for each lane/link) and wait for bit [1] == 0.

All PHY links are now enabled and in PIPE P1 power state (PCIe Gen1).

14.2 Change Link Power State and/or Data Rate in PHY Isolation Mode (PIPE mode)

1. Read PHY_PCS_ISO_LINK_CTRL (for the master lane of the selected link). Verify bit[1] == 0. If not 0, read again. If not 0 at this point, there is an error. (This ensures that the PIPE PhyStatus bit is low upon initiating the power state change.)
2. Write 0b0000_11mm_nnnn_0001 to PHY_PCS_ISO_LINK_CTRL (for the master lane of the selected link), where nnnn is the desired PIPE power state and mm is the desired PIPe rate. Note: Must follow PIPE specification rules for changing rate and power state (i.e can only change both at the same time when the power state change is from P0 -> P2).
3. Read PHY_PCS_ISO_LINK_CTRL, until bit[1] == 1, then == 0.

The PHY is now in the selected power state / data rate.

Change Log

Version	Description of changes
0.1	Release Date: November 20, 2017 • Initial version based on Torrent 16nm information
0.2	Release Date: January 9, 2018 • Updated chapter 6 with latest PMA scan insertion description.
0.3	Release Date: August 27, 2018 • Deleted skew requirement between tx_td_clk_ln_* and xcvr_scanclk_serclk_ln_* and cmn_s-canclk_serclk. • Added description of scan clock source requirements.
0.4	Release Date: September 14, 2018 • Updated coverage section (SER-16796) • Fixed typos and generated book
0.5	Release Date: October 12, 2018 • Added additional information to placement section indicating customers must maintain at least 60um OD injector spacing from any edge of the PMA macro (SER-16973). • Added Tx-only lane drawings in section 9.2. • Updated PHY block diagram for Tx-only lane option. • Fixed typo in section 5.1 - 2 configuration options vice 3. • Added size of Tx-only lane to section 9.2. • Added description for which loopback mode is available for Tx-only lanes.
0.6	Release Date: November 9, 2018 • In table 14, the clock frequencies for scanclk_pipeclk between 16-bit and 32-bit modes reversed.
0.7	Release Date: December 04, 2018 • Removed power spec and power supply noise tolerance TBD sections (SER-17773) • Updated decoupling capacitance table TBD values (SER-17773)
0.8	Release Date: January 9, 2019 • Updated cmn_scanclk_pllclk and xcvr_scanclk_pllclk_ln_* clock frequencies for DP Tx (from 810 to 405 MHz) and JESD (from 1031.25 to 515.625 MHz).
0.9	Release Date: April 29, 2019 • Updated Table 6 to include all protocols instead of just the worst case.
1.0	Release Date: May 21, 2019 • Added further description to simulation speedup procedure for cases where apb_pclk not free-running.
1.1	Release Date: July 10, 2019 • Added Power and Ground Connections in Package diagram in power supplies section (SER-19507)
1.2	Release Date: August 13, 2019 • Added hard macro requirement that no logic be connected to PMA bumps.
1.3	Release Date: March 12, 2020 • Updated SRIO/JESD204B column heading with XFI/USXGMII in Raw SerDes Interface Pins (PIPE, Ethernet, Alternate SATA and DP Tx) table (SER-22445) • Added XFI/USXGMII column to clock names table (SER-22445) • Added XFI/USXGMII column to PHY functional clocks table (SER-22445) • Added XFI/USXGMII column to PHY scan clocks table (SER-22445)
1.4	Release Date: May 19, 2020 • Added Supported ATPG flow sub-section under production test strategy (SER-22293)
1.5	Release Date: June 30, 2020 • Fixed typos with PMA power bump names (xcvr_avdd_ln changed to <tx/rx>_avdd_ln.

Version	Description of changes
1.6	Release Date: August 19, 2020 • Replaced “Flipchip Bump Inductance” with “Flipchip Supply Inductance (Ball to each Bump)” in package RLC guidelines table (SER-24210) • Added description of PCIe auto configuration customer release option.
1.7	Release Date: September 15, 2020 • Added data synchronizers section (SER-24517)
1.8	Release Date: March 08, 2021 • Updated scan insertion section to state there is a maximum of 128 F/Fs on a scan chain (SER-19174)
1.9	Release Date: June 03, 2021 • Removed operating conditions table as it already exists in PMA spec and user guide • Added Power Supply Noise Tolerance section (SER-27534)
2.0	Release Date: August 10, 2021 • Added Receiver Detect Simulation section in simulation chapter (SER-28154)
2.1	Release Date: January 05, 2022 • Updated Clock Skew Requirement between cmn_psm_clk_in and xcvr_psm_clk_ln_<> section with PMA clock input skew requirements (SER-29177)
2.2	Release Date: March 03, 2022 • Updated cmn_scanclk_serclk 2.5GE to 156.25MHZ in PHY scan clock table (SER-29944) • Updated xcvr_scanclk_serclk_ln_* 2.5GE to 156.25MHZ in PHY scan clock table (SER-29944)
2.3	Release Date: March 14, 2022 • Updated cmn_scanclk_serclk 1GE to 62.5MHZ in PHY scan clock table (SER-29944) • Updated xcvr_scanclk_serclk_ln_ 1GE to 62.5MHZ in PHY scan clock table (SER-29944) • Updated pma_pllclk_datart_ln_ 2.5GE to 156.25MHZ in PHY functional clock table (SER-29944) • Updated pma_rx_rd_clk_ln_ 2.5GE to 156.25MHZ in PHY functional clock table (SER-29944) • Updated pma_tx_rd_clk_ln_ 2.5GE to 156.25MHZ in PHY functional clock table (SER-29944)
2.4	Release Date: September 07, 2022 • Replaced xcvr_pll_clk_ln_ with xcvr_pll_clk_datart_ln_ in Clock Skew Requirement between tx_td_clk_ln_<> in a multi-lane link section (SER-31995)
2.5	Release Date: October 19, 2022 • Updated pma_refclk_rcv_out Max Duty Cycle to 40/60 in PHY output clock constraints table (SER-32196) • Updated pma_rx_rd_clk_ln_ TBD columns in PHY output clock constraints table (SER-32196)

Index

A
AC JTAG 41
acronyms 8
analog 37
APB 9
ATB pins 33
B
BIST 45
book organization 7
boundary scan 38
BSDL 41
C
clock constraints 36
clock gating 20
clock over constraint 20
clocks 19
common bump pattern 27
common macro 27
D
DC JTAG 41
decoupling capacitance 29
delay constraint 20
deliverables 10
domain timing 21
driving cell 20
E
ESD 27, 33
external components 29
F
false paths 21
far end parallel loopback 43
G
gate level simulation 18
ground bump 31
H
hard macro 25
I
internal reference clock 28
ISI generation 43
J
JTAG 38
JTAG instructions 40
L
latch cells 21
LEC 24
line side loopback 43
LINT 21
loading cell 20
loopback mode 43
M
metal fill 27
multiprotocol PHY interface 14
multiprotocol pipe interface 12
N
near end parallel loopback 44
P
package connections 30
package information 30
PHY BSCAN 39
placement constraints 27
PMA structure 26
power bump 31
power supply sequencing 29
Pre CTS 20
process technology 25
production test 37
R
recovered clock loopback 44
reference clock input 27
reset 23
RLC 30
S
scan 37
scan clock reset 38
scan insertion 22
scan override 23
serial loopback 43
set don’t touch 21
simulation speedup 18
speed scan clock 38
synthesis 19
T
TAP 9
TDI 39
TDO 39
transceiver bump pattern 27
transceiver macro 27
U
USB PCS 9
USB PHY 9
USB PHY frequency 36