Torrent 12FFC Multi-Protocol PHY

TSMC 12nm FFC

Part #: sd0801

IP Rev: R130 - Doc Rev: V1.5

Product Datasheet

May 16, 2023

CADENCE CONFIDENTIAL

© 1996-2023 Cadence Design Systems, Inc. All rights reserved.

Cadence Design Systems, Inc. (Cadence), 2655 Seely Ave., San Jose, CA 95134, USA.

Trademarks: Trademarks and service marks of Cadence Design Systems, Inc. contained in this document are attributed to Cadence with the appropriate symbol. For queries regarding Cadence's trademarks, contact the corporate legal department at the address shown above or call 800.862.4522. All other trademarks are the property of their respective holders.

Restricted Permission: This document is protected by copyright law and international treaties and contains trade secrets and proprietary information owned by Cadence. Unauthorized reproduction or distribution of this document, or any portion of it, may result in civil and criminal penalties. Except as specified in this permission statement, this document may not be copied, reproduced, modified, published, uploaded, posted, transmitted, or distributed in any way, without prior written permission from Cadence. This document contains the proprietary and confidential information of Cadence or its licensors, and is supplied subject to, and may be used only in accordance with, a written agreement between Cadence and its customer.

Unless otherwise agreed to by Cadence in writing, this statement grants Cadence customers permission to print one (1) hard copy of this document subject to the following conditions:

1. This document may not be modified in any way.
2. Any authorized copy of this document or portion thereof must include all original copyright, trademark, and other proprietary notices and this permission statement.
3. The information contained in this document cannot be used in the development of like products or software, whether for internal or external use, and shall not be used for the benefit of any other party, whether or not for consideration.

Disclaimer: INFORMATION IN THIS DOCUMENT IS SUBJECT TO CHANGE WITHOUT NOTICE AND DOES NOT REPRESENT A COMMITMENT ON THE PART OF CADENCE. EXCEPT AS MAY BE EXPLICITLY SET FORTH IN A WRITTEN AGREEMENT BETWEEN CADENCE AND ITS CUSTOMER, CADENCE DOES NOT MAKE, AND EXPRESSLY DISCLAIMS, ANY REPRESENTATIONS OR WARRANTIES AS TO THE COMPLETENESS, ACCURACY OR USEFULNESS OF THE INFORMATION CONTAINED IN THIS DOCUMENT. CADENCE DOES NOT WARRANT THAT USE OF SUCH INFORMATION WILL NOT INFRINGE ANY THIRD PARTY RIGHTS, AND CADENCE DISCLAIMS ALL IMPLIED WARRANTIES, INCLUDING MERCHANTABILITY AND FITNESS FOR A PARTICULAR PURPOSE. CADENCE DOES NOT ASSUME ANY LIABILITY FOR DAMAGES OR COSTS OF ANY KIND THAT MAY RESULT FROM USE OF SUCH INFORMATION. CADENCE CUSTOMER HAS COMPLETE CONTROL AND FINAL DECISION-MAKING AUTHORITY OVER ALL ASPECTS OF THE DEVELOPMENT, MANUFACTURE, SALE AND USE OF CUSTOMER'S PRODUCT, INCLUDING, BUT NOT LIMITED TO, ALL DECISIONS WITH REGARD TO DESIGN, PRODUCTION, TESTING, ASSEMBLY, QUALIFICATION, CERTIFICATION, INTEGRATION OF CADENCE PRODUCTS, INSTRUCTIONS FOR USE, LABELING AND DISTRIBUTION, AND CADENCE EXPRESSLY DISAVOWS ANY RESPONSIBILITY WITH REGARD TO ANY SUCH DECISIONS REGARDING CUSTOMER'S PRODUCT.

Restricted Rights: Use, duplication, or disclosure by the Government is subject to restrictions as set forth in FAR52.227-14 and DFAR252.227-7013 et seq. or its successor.

Table Of Contents

List Of Tables ... 5
List Of Figures ... 6
About this Document ... 7
1 General Information ... 9
1.1 Product Highlights ... 10
1.2 Key Features ... 11
1.3 PHY Architecture ... 12
2 Top Level Architecture ... 13
2.1 PHY-Level Architecture ... 13
2.1.1 PHY Level Block Diagram ... 13
2.1.2 Interfaces ... 14
2.1.3 Block Descriptions ... 14
2.1.4 Multi-link / Multi-Protocol Support ... 16
2.2 PMA-Level Architecture ... 17
2.2.1 PMA Level Block Diagram ... 18
2.2.2 PMA Block Descriptions ... 19
3 Configuration Options ... 21
3.1 Number of lanes ... 21
3.2 Soft IP ... 21
4 Clocks and Reset ... 22
4.1 Clocks ... 22
4.1.1 Reference clock inputs ... 22
4.1.2 APB clock ... 22
4.1.3 TAP clock ... 22
4.1.4 Data path clocks ... 23
4.2 Resets ... 23
5 Performance, Power and Area ... 24
5.1 Area ... 24
5.1.1 Common Area Target ... 24
5.1.2 Lane Area Target ... 25
5.2 Power Targets ... 26
5.3 Performance ... 38
5.3.1 Recommended Operating Conditions ... 38
6 Testability ... 39
6.1 Analog Test Bus (ATB) ... 39
6.2 Loopback Modes ... 40
6.3 Digital Test Bus ... 46
6.4 Configuration and Status Registers ... 46
6.5 PMA Receive Data Eye Measurement ... 46
6.6 PMA BIST Pattern Generator And Checker ... 48
7 Reliability ... 49
7.1 Lifetime ... 49
7.2 ESD ... 49
7.3 HTOL ... 49
7.4 EM/IR Constraints ... 49
8 Process Information ... 50
8.1 Process Flavor ... 50
8.2 Components Used ... 50
8.3 Metal Stack ... 50
8.4 Bump Pitch ... 50
8.5 Poly Orientation ... 50
8.6 Third Party Licensing Requirement / Restriction ... 50

9 Deliverables 51
Index 52

List Of Tables

Table 1: Terms and Definitions 8
Table 2: Supported PHY configurations 16
Table 3: Supported PIPE PCS configuration options 21
Table 4: PHY reference clock inputs 22
Table 5: APB clock input 22
Table 6: TAP clock input 22
Table 7: Data Path Clocks 23
Table 8: Reset Signals 23
Table 9: CMN A0 Power Specification for 0.80V/1.2V Supplies (1PLL) 26
Table 10: CMN A0 Power Specification for 0.80V/1.2V Supplies (2PLL) 27
Table 11: Lane A0 power Specification for 0.80V/1.2V Supplies 28
Table 12: CMN/Lane A0 Current on Various Supply Domains for 0.80V/1.2V Supplies 29
Table 13: CMN A1 power Specification for 0.80V/1.2V Supplies (1PLL) 30
Table 14: CMN A1 power Specification for 0.80V/1.2V Supplies (2PLL) 31
Table 15: Lane A1 power Specification for 0.80V/1.2V Supplies 32
Table 16: CMN/Lane A1 Current on Various Supply Domains for 0.80V/1.2V Supplies 33
Table 17: CMN A2 power Specification for 0.80V/1.2V Supplies (1PLL) 34
Table 18: CMN A2 power Specification for 0.80V/1.2V Supplies (2PLL) 35
Table 19: Lane A2 power Specification for 0.80V/1.2V Supplies 36
Table 20: CMN/Lane A2 Current on Various Supply Domains for 0.80V/1.2V Supplies 37
Table 21: Cmn+Lane (Total) Power Consumed in Low Power Modes 38
Table 22: Operating conditions 38
Table 23: ESD Protection Targets 49
Table 24: Deliverables 51

List Of Figures

Figure 1: Torrent 12FFC Multi-Protocol PHY 9
Figure 2: Example of a Typical System-on-a-Chip Design 10
Figure 3: Torrent 12FFC Multi-Protocol PHY block diagram 13
Figure 4: PMA macro block diagram 18
Figure 5: Common Area 24
Figure 6: Lane Area 25
Figure 7: Serial loopback 40
Figure 8: ISI generation loopback 41
Figure 9: Near end parallel loopback 42
Figure 10: Line side loopback 43
Figure 11: Far end parallel loopback 44
Figure 12: Recovered clock loopback 45
Figure 13: Receiver data eye measurement function block diagram 47

About this Document

This product datasheet provides high level information on architectural features and functional operations of Torrent 12FFC Multi-Protocol PHY IP design. The target audience for this product datasheet are the architects and procurement / engineering management looking to integrate Cadence IP in their system-on-a-chip (SoC) design environment.

This document is organized as follows:

Section 1 General Information on page 9

Section 2 Top Level Architecture on page 13

Section 3 Configuration Options on page 21

Section 4 Clocks and Reset on page 22

Section 5 Performance, Power and Area on page 24

Section 6 Testability on page 39

Section 7 Reliability on page 49

Section 8 Process Information on page 50

Section 9 Deliverables on page 51

Additional Publications

Cadence Torrent 12FFC Multi-Protocol PHY User's Guide

Cadence Torrent 12FFC Multi-Protocol PHY Programmer's Guide

Cadence Torrent 12FFC Multi-Protocol PHY Integration Guide

Table 1 lists possible acronyms and terms used in this document.

Term	Definition
AMBA™	Advanced Microcontroller Bus Architecture
APB	Advanced Peripheral Bus
ATB	Analog test bus
BIST	Built-in self test
CDB	Configuration and diagnostics bus in the PMA. (Same as the APB bus in the PHY)
CMN	Common module
CTLE	Continuous Time Linear Equalizer
DAC	Digital-to-analog converter
DFE	Decision Feedback Equalization
DSM	Delta Sigma Modulator
Gb/s	Gigabit per second
GDSII	Graphic Design System II
HVM	High Volume Manufacturing
ISI	Inter symbol interference
Lane	The digital and analog components of the PMA associated with one serial bit stream
LEC	Logic Equivalency Checking
LSB	Least significant bit
Macro	The entire PHY component being delivered
Mb/s	Megabit per second
Module	Module refers to any sub-component of the overall macro
MP-PHY	Multiprotocol PHY
PCS	Physical Coding Sub-layer
PD	Phase detector
PHY	Physical layer
PI	Phase Interpolator
PIPE	Physical Interface for the PCE Express
PLL	Phase Lock Loop
PMA	Physical Media Attachment
PPM	Parts Per Million
PRBS	Pseudo Random Binary Sequence
RX	Receiver
SDC	Synopsys™ Design Constraints
SoC	System on a Chip
SSC	Spread Spectrum Clocking
TAP	Test Access Port
TX	Transmitter
UI	Unit Interval - The amount of time taken for one serial bit of data to be transmitted
VCO	Voltage-Controlled Oscillator
VGA	Variable Gain Amplifier
XCVR	Transceiver

Table 1: Terms and Definitions

1 General Information

Cadence Design Systems' Torrent 12FFC Multi-Protocol PHY is the latest member of the Cadence family of multi-protocol SerDes (Serializer/Deserializer) IPs to introduce scalable multi-link / multi-protocol architecture and system building blocks embedded with features that deliver low power / high performance customer driven benefits.

- Demanding applications—GUI interface for eye monitoring / long reach for demanding applications.
- Automotive safety—hardware and software mechanisms to enhance automotive safety integrity level.
- Ease of integration—one PHY for fastest SoC integration.
- Versatile features—one-license unlimited instantiation on a single SoC.
- SerDes history—successful product design and integration.
- Design verification—Cadence's leading edge VIP and controller offering.

SerDes requirements for System-on-Chip (SoCs) are becoming increasingly demanding to support increasing numbers of protocols optimized for cost and power sensitive mobile, wireless IoT, consumer and automotive designs.

Engineered for high-performance networking systems and computing, the Torrent 12FFC Multi-Protocol PHY is a multi-protocol, multi-link PHY IP, supporting PCIe Gen 1/2/3, USB3.2 Gen 1/2, SATA Gen 1/2/3, DP 1.4 (Tx-only), eDP 1.4b (Tx-only), QSGMII/SGMII, XFI, USXGMII, and JESD204B (selected rates) for a flexible interconnect solution in System on Chip (SoC) designs.

Figure 1 illustrates the Torrent 12FFC Multi-Protocol PHY IP components, while *Figure 2* is an example of a typical SoC design.

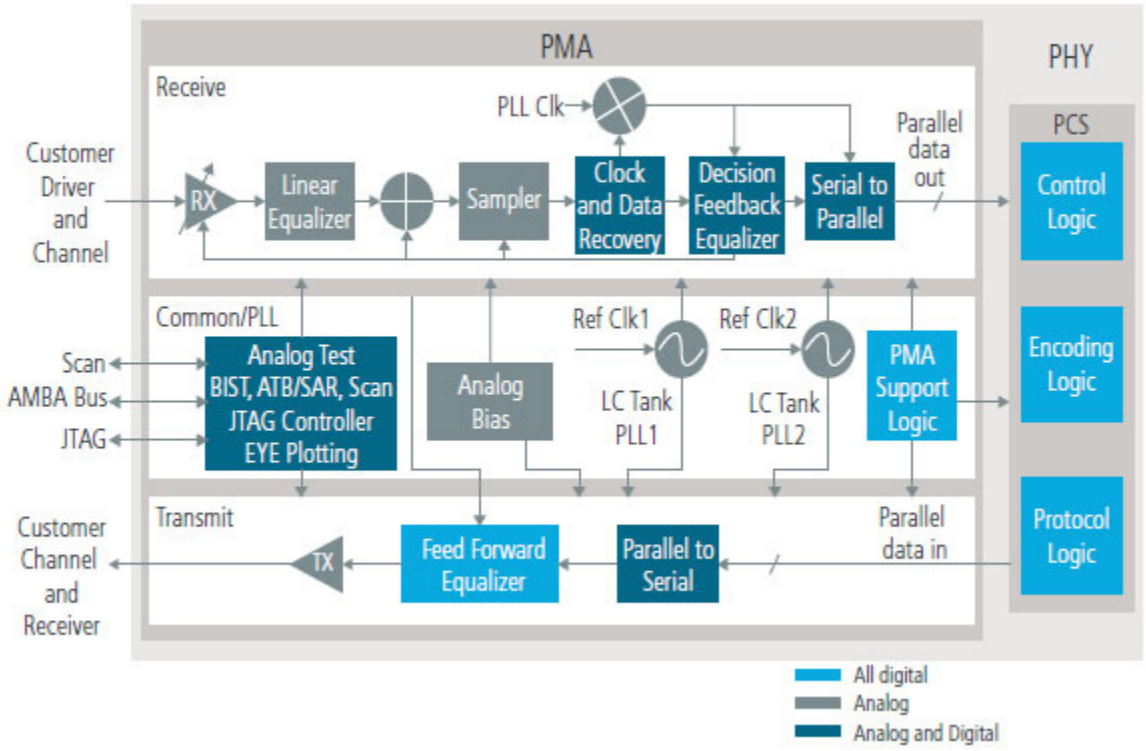

Figure 1: Torrent 12FFC Multi-Protocol PHY

1.1 Product Highlights

- Cadence Design Systems, Inc. delivers custom, synthesizable IP to support specific design requirements, and offers a comprehensive IP solution that is in volume production.
- Cadence Torrent 12FFC Multi-Protocol PHY is a hard PHY macro consisting of a Physical Media Attachment (PMA) layer and a soft Physical Coding Sublayer (PCS).
- Cadence Torrent 12FFC Multi-Protocol PHY is architected to quickly and easily integrate into any system on chip (SoC), and to connect seamlessly to Cadence, or third party, PIPE 4.4.1-compliant controllers. Cadence Torrent 12FFC Multi-Protocol PHY provides a cost-effective, protocol-versatile, and low-power solution for demanding applications. It offers SoC integrators the advanced capabilities, flexibilities, and support that meets the requirements of high-performance designs.
- Cadence Torrent 12FFC Multi-Protocol PHY is designed to support multiple protocols using a single PMA hard macro with continuous frequency range support from 1Gbps to 10Gbps, and is compliant with PCIe (Gen 1/2/3), USB 3.1 (Gen1/2), XAUI, QSGMII/SGMII, XFI, USXGMII, and SATA 3 (Gen 1/2/3) specifications. The PCS complies with the PIPE 4.4.1 standard and provides support for the dynamic equalization features of different protocols.
- Cadence Torrent 12FFC Multi-Protocol PHY comes with additional configuration options where it can be configured by Cadence not only to be a full Multi-Protocol PHY but also a PHY that supports a subset of standards.
- Cadence SerDes IP is silicon-proven and has been extensively validated with multiple hardware platforms.

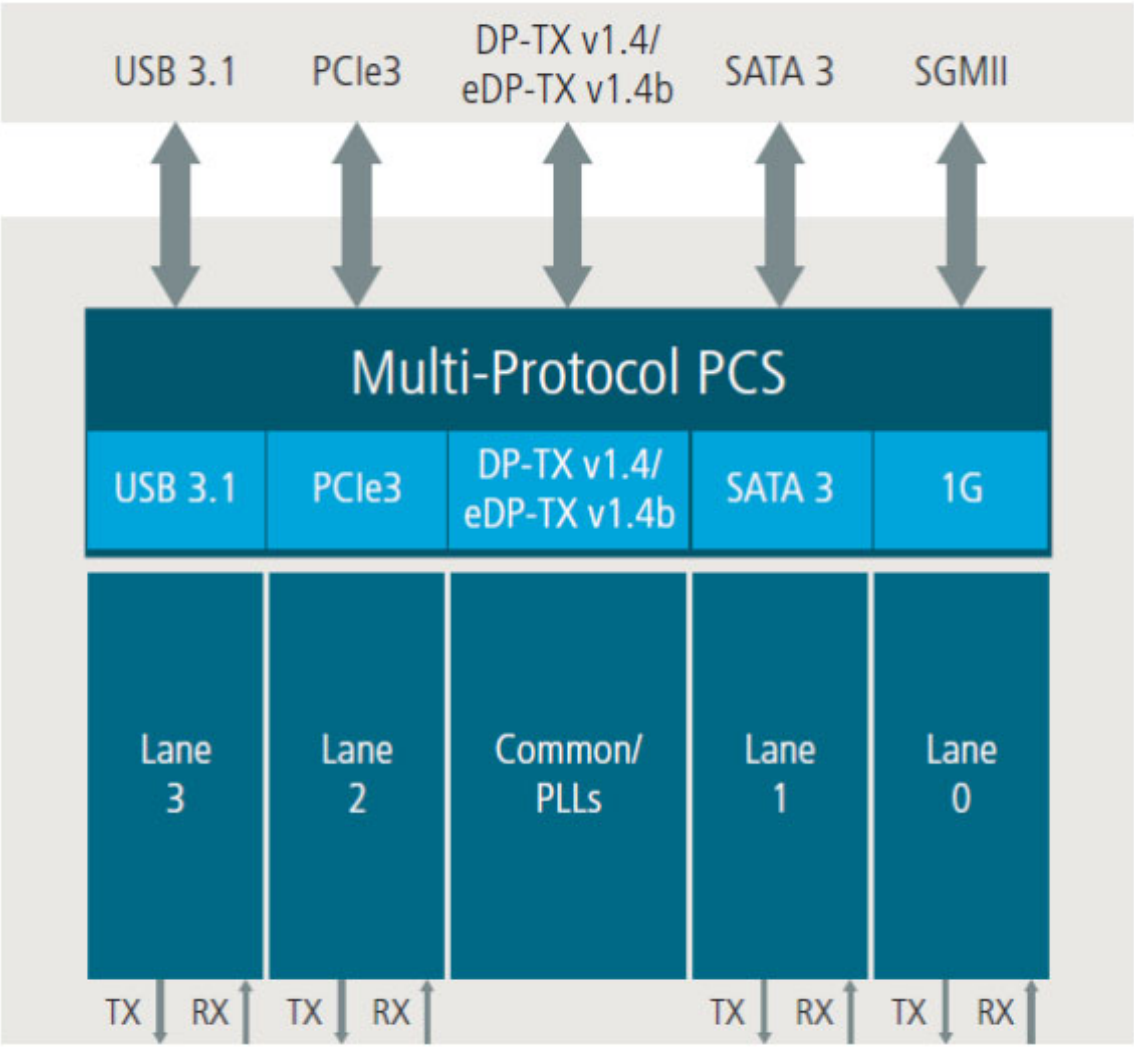

Figure 2: Example of a Typical System-on-a-Chip Design

1.2 Key Features

Multiple Interfaces

- PIPE 4.4.1 – Primary interface between PHY and controller for PCIe, USB3.2 and SATA.
  - Supports 16- or 32-bit PIPE data width.
- Raw SerDes - Provides direct connection to the PMA (bypassing the PIPE PCS) for Ethernet, DisplayPort Tx, SATA, JESD204B, and XFI.
  - 20-bit wide Tx and Rx data bus with separate Tx and Rx source synchronous clocks.
  - Data rate clock provided as separate PHY output for use as source of clock for Tx data.
- AMBA APB3 – Interface for access to PHY configuration, control and status registers.
  - 200 MHz (max) APB clock frequency.
  - 16-bit read/write data width.
  - 16-bit address width.
- JTAG – Standard TAP controller interface for silicon testing and alternate path to access APB registers.
  - Allows bypassing of APB interface (and clock) for APB register access during manufacturing test.

Diverse Functionality

- Supports the following standards
  - USB3.2 Gen 1 (5 Gbps) and Gen 2 (10 Gbps)
  - PCIe Gen 1 (2.5 Gbps), Gen 2 (5 Gbps) and Gen 3 (8 Gbps)
  - DisplayPort 1.4 RBR (1.62 Gbps), HBR (2.7 Gbps), HBR2 (5.4 Gbps) and HBR3 (8.1 Gbps)
  - Embedded DisplayPort 1.4b UI_Rate_1 through UI_Rate_8 (1.62 Gbps, 2.16 Gbps, 2.43 Gbps, 2.7 Gbps, 3.24 Gbps, 4.32 Gbps, 5.4 Gbps and 8.1 Gbps)
  - Ethernet: SGMII (1.25 Gbps), 2.5G Ethernet, 5G Ethernet, and 10G Ethernet (USXGMII)
  - SATA Gen 1 (1.5 Gbps), Gen 2 (3 Gbps) and Gen 3 (6 Gbps)
  - JESD204B (various rates from 1.25 to 10.3125 Gbps)
  - XFI(10.3125 Gbps)
- Supports lane configurations from 1 to 8 lanes.
- Multi-link support for simultaneous independent links of the same protocol:
  - Any supported combination of PCIe links with the only restriction being that lanes within a multi-lane link must be adjacent to each other. Thus, a 4-lane PHY can be configured to support 4x1 links, 1x4 link, 2x2 links, 2x1 + 1x2 links.
  - A USB3.2, SATA or Ethernet link per lane.
  - 2 DP / eDP Tx links where each link can be 1, 2 or 4 lanes per the total number of available lanes (with same restriction as PCIe that lanes in the same link must be adjacent).
  - 2 JESD204B links.
- Multi-protocol (max of 2), multi-link support for simultaneous independent links of the following combinations:
  - Single links of PCIe, DP/eDP and JESD204b (pick 2).
  - Single link of PCIe, eDP, JESD204b (pick 1) + multiple links of USB3.2, DP, SATA, Ethernet (pick 1).
  - Multiple PCIe + multiple USB3.2 links, if all PCIe and USB3.2 links use same reference clock and SSC configuration.

  - Multiple links of USB3.2, SATA and Ethernet (pick 2).
- Supports PCIExpress L1 substates.
- Robust clock/data recovery tracks static frequency offset of +/- 300 PPM, and spread spectrum up to 5000 PPM.
- 3-tap DFE and Tx FFT.
- Supports three input reference clock sources – one differential from bumps (external) and two single-ended from SoC (internal)
- External reference clock active detection.
- Supports SRIS and internal SSC generation.
  - 1 kB max payload size for PCIe.
- Single off-chip resistor required.
- Automatic calibration of on-chip termination resistors.

Testability and Debug Facilities

- IEEE 1149.1 DC JTAG boundary scan
- IEEE 1149.6 AC JTAG boundary scan
- BIST pattern generation and checking – PRBS7/15/23/31 plus user-defined pattern capability
- Programmable non-destructive receive data eye measurement
- Analog test bus with integrated 8-bit digitizer
- Digital test bus
- Jitter injection through internal loopback path
- Multiple internal loopbacks and programmable control overrides
- Separate PHY- and PMA-level signal isolation modes

1.3 PHY Architecture

The Torrent 12FFC Multi-Protocol PHY is designed with a lane-based architecture, providing greater control over floor-planning, placement, packaging, and I/O integration than other hard PHY solutions, while maintaining reliability and ease of use associated with GDSII macros.

2 Top Level Architecture

The Torrent 12FFC Multi-Protocol PHY consists of a Physical Media Attachment (PMA) layer and a Physical Coding Sub-layer (PCS). What follows is PHY level and PMA level block diagram with comprehensive description of their underlying building blocks.

2.1 PHY-Level Architecture

2.1.1 PHY Level Block Diagram

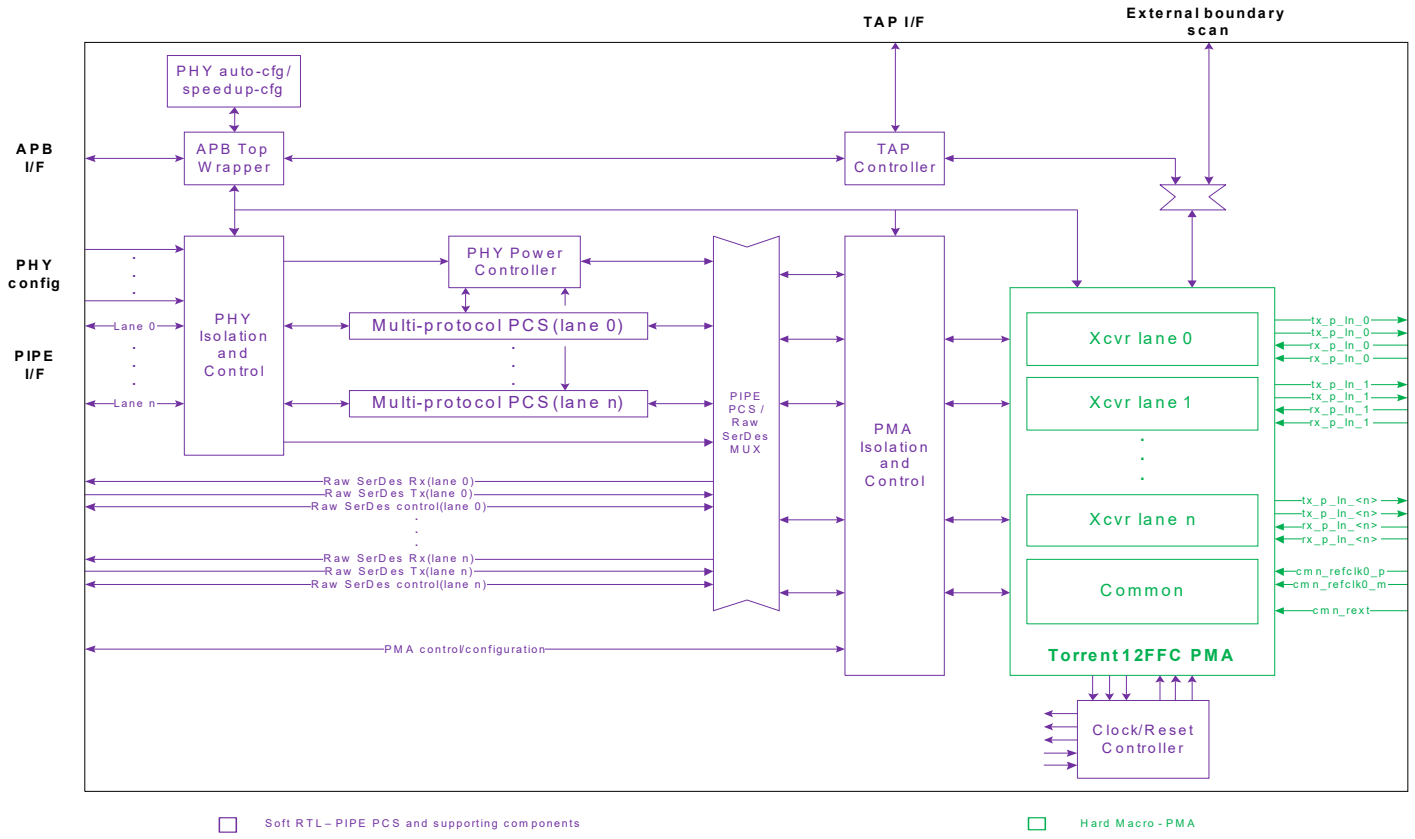

Figure 3: Torrent 12FFC Multi-Protocol PHY block diagram

2.1.2 Interfaces

2.1.2.1 PIPE and Raw SerDes interfaces

The primary functional PHY interfaces are the PIPE I/F and the Raw SerDes I/F. Each lane has a set of PIPE I/F pins and Raw SerDes I/F pins. Each lane can be configured as an independent link or as part of a multi-lane link. Each link is configured to either use the PIPE I/F or the Raw SerDes I/F (within the bounds of the supported multi-protocol configurations) for each lane in the link. The PIPE I/F is used for PCIe, USB3 and SATA links. The Raw SerDes I/F is used for DisplayPort Tx, SATA, SGMII, 2.5/5G Ethernet and JESD204B links.

The PIPE I/F is compliant to the PIPE 4.4.1 specification. The PIPE data path width is configurable between 16- or 32-bits for all supported protocols/rates. PCIe L1 sub-states are supported through separate side-band signals.

As the name implies, the Raw SerDes I/F bypasses the PIPE PCS and drives PMA pins directly from PHY top-level pins. For the data path, the Raw SerDes I/F is a simple source synchronous clock and data interface (i.e. Rx clock/data output and Tx clock/data input). The data path width is 20-bits for each of the supported protocols. Beyond the Tx and Rx data pins, the Raw SerDes interface provides pins for controlling the links power state, transmitter deemphasis/margin/swing, receiver detection, receiver equalization and far-end transmitter equalization.

2.1.2.2 APB interface

The APB interface is compliant to AMBA APB3. It has 16-bit wide data and address buses with a maximum 200 MHz clock frequency. The APB interface provides read/write access to the PHY (and PMA) APB registers for configuration, control and status.

2.1.2.3 TAP and External Boundary Scan interfaces

The TAP interface is a standard IEEE 1149.1 JTAG interface. The TAP interface provides an alternate interface for accessing PHY APB registers (primarily for the purpose of silicon manufacturing test). Additionally, it supports boundary scan of the PHY high speed Tx and Rx differential pins.

To support using an external TAP controller for boundary scan, an external boundary scan interface is available, which can be selected instead of the internal TAP controller.

2.1.3 Block Descriptions

2.1.3.1 Multi-protocol PCS

The multi-protocol PCS connects the PIPE interface to the PMA interface for a lane. It performs the following functions:

- 8b/10b encoding on Tx data and decoding on Rx data for PCIe Gen1/2, USB3 Gen1 and SATA.
- 128b/130b encoding on Tx data and decoding on Rx data for PCIe Gen 3.
- 128b/132b encoding on Tx data and decoding on Rx data for USB3 Gen2.
- COMMA symbol alignment on PMA Rx data for PCIe Gen1/2, USB3, Gen1 and SATA.
- 128b/130b block alignment on PMA Rx data for PCIe Gen 3.
- 128b/132b block alignment on PMA Rx data for USB3 Gen2.
- Elasticity buffering in the Rx data path to handle clock crossing between the Rx clock and link data rate clock and compensate for frequency differences between these clocks by inserting or deleting SKIP/ALIGN symbols/ordered sets/primitives.
- Converts between 32-bit PIPE data width to 16-bit PCS data path width.
- Rx to Tx clock compensated (i.e. after the elasticity buffer) loopback, including USB3 Gen 1 BERT operation.

2.1.3.2 PHY Power Controller

The PHY power controller performs the following functions:

- When all links are in low power states, suspends the PMA common to place the PHY in its lowest power state.
- Initiates re-calibration of the PMA PLLs for changes in PCIe data rate, for PHY configurations in which all data rates for the PCIe link are driven by the same PLL.

2.1.3.3 PIPE PCS / Raw SerDes MUX

For each lane, the PIPE PCS / Raw SerDes MUX selects between the PCS PMA-side interface and Raw SerDes interface for driving the PMA.

2.1.3.4 APB Top Wrapper

The APB top wrapper performs the arbitration between the PHY APB interface, the PHY auto-configuration/speedup block and the internal TAP controller for read/write access to PHY APB registers.

2.1.3.5 Clock/Reset controller

The Clock/Reset controller selects the data rate clock source for a lane depending on the PHY configuration and synchronizes the de-assertion of PHY resets to the appropriate clocks.

2.1.3.6 PHY and PMA Isolation and Control

The PHY and PMA Isolation and Control blocks perform the following functions: (1) enables operating the PHY or PMA in isolation mode where all signaling is driven by ‘isolation’ APB registers and (2) provides internal APB configuration and status registers.

PHY and PMA isolation allows the PHY to operate in a standalone mode. For PHY isolation, all PHY inputs are driven from APB isolation registers and all PHY (non-data) outputs are captured in APB status registers. For PMA isolation mode, all PMA inputs are driven from APB isolation registers and all PMA (non-data) outputs are captured in APB status registers. When combined with the self-test capabilities of the PMA, these modes enable silicon manufacturing tests and post-manufacturing self-test.

2.1.3.7 PHY auto-configuration/speedup

The PHY auto-configuration and speedup block enables automatic configuration of a link for a non-default mode. The default configuration for all PMA registers is PCIe. Based on the lane configuration, at initial start-up, this block will re-configure the necessary PMA registers for the selected PIPE mode of operation (Raw SerDes modes require manual PHY configuration). Additionally, when enabled, the block will configure the PHY for simulation speedup.

2.1.4 Multi-link / Multi-Protocol Support

The PHY supports simultaneous operation of independent links of the following PHY configurations.

PCIe	USB3	SATA	DP Tx	Ethernet	JESD204B eDP	Description
multiple						N[1] x1[2] links
	multiple					N links
		multiple				N links
			multiple			N x1[2] links
				multiple		N links
					multiple	2 links (max)
single	multiple					No SSC for PCIe: 1 PCIe link (1xM[3]); P[4] USB3 links.
multiple	multiple					PCIe and USB3 same SSC cfg: M x1[2] PCIe links and P USB3 links.
single		multiple				1 PCIe link (1xM) and P SATA links.
single			single			1 PCIe link (1xM) and 1 DP Tx link (1xP)
multiple				multiple		M x1[2] PCIe links and P Ethernet links
single					single	1 PCIe link (1xM) and 1 JESD204B/eDP link
	multiple	multiple				M USB3 links and P SATA links
	multiple		single			M USB3 links and 1 DP Tx link (1xP)
	multiple			multiple		M USB3 links and P Ethernet links
	multiple				single	M USB3 links and 1 JESD204B/eDP link
		multiple	single			M SATA links and 1 DP Tx link (1xP)
		multiple		multiple		M SATA links and P Ethernet links
		multiple			single	M SATA links and 1 JESD204B/eDP link
			single	multiple		1 DP link (1xM) and P Ethernet links
			single		single	1 DP link and 1 JESD204B/eDP link
				multiple	single	M Ethernet links and 1 JESD204B/eDP link

Table 2: Supported PHY configurations

Notes:
1. N = number of PHY lanes.
2. Or fewer total links of single/multi-lane PCIe/DP links.
3. M = number of PHY lanes configured for the first selected protocol (left to right in the table above).
4. P = N-M (i.e. remaining lanes)

2.2 PMA-Level Architecture

The PMA implements the functionality generally attributed to the PMA sublayer, including:

- High-speed clock generation
- Serialization of parallel data words into a single-bit stream on calibrated termination media pins with adjustable drive levels and optional pre-cursor and post-cursor emphasis capability
- Related media pin support functions such as receiver detection and idle detection.
- Reception of single-bit data streams on calibrated termination media pins with clock recovery, receiver equalization and de-serialization of this data into parallel data words.
- Support features for these functions including bias generation, automatic calibrations, and staged power down levels.
- Diagnostic features such as loopback, BIST and eye surf.

Figure 4 illustrates a high level block diagram of the common and transceiver functions of this macro. Architectural description of the blocks that make up this block diagram can be found in section 2.2.2 “PMA Block Descriptions” on page 19.

2.2.1 PMA Level Block Diagram

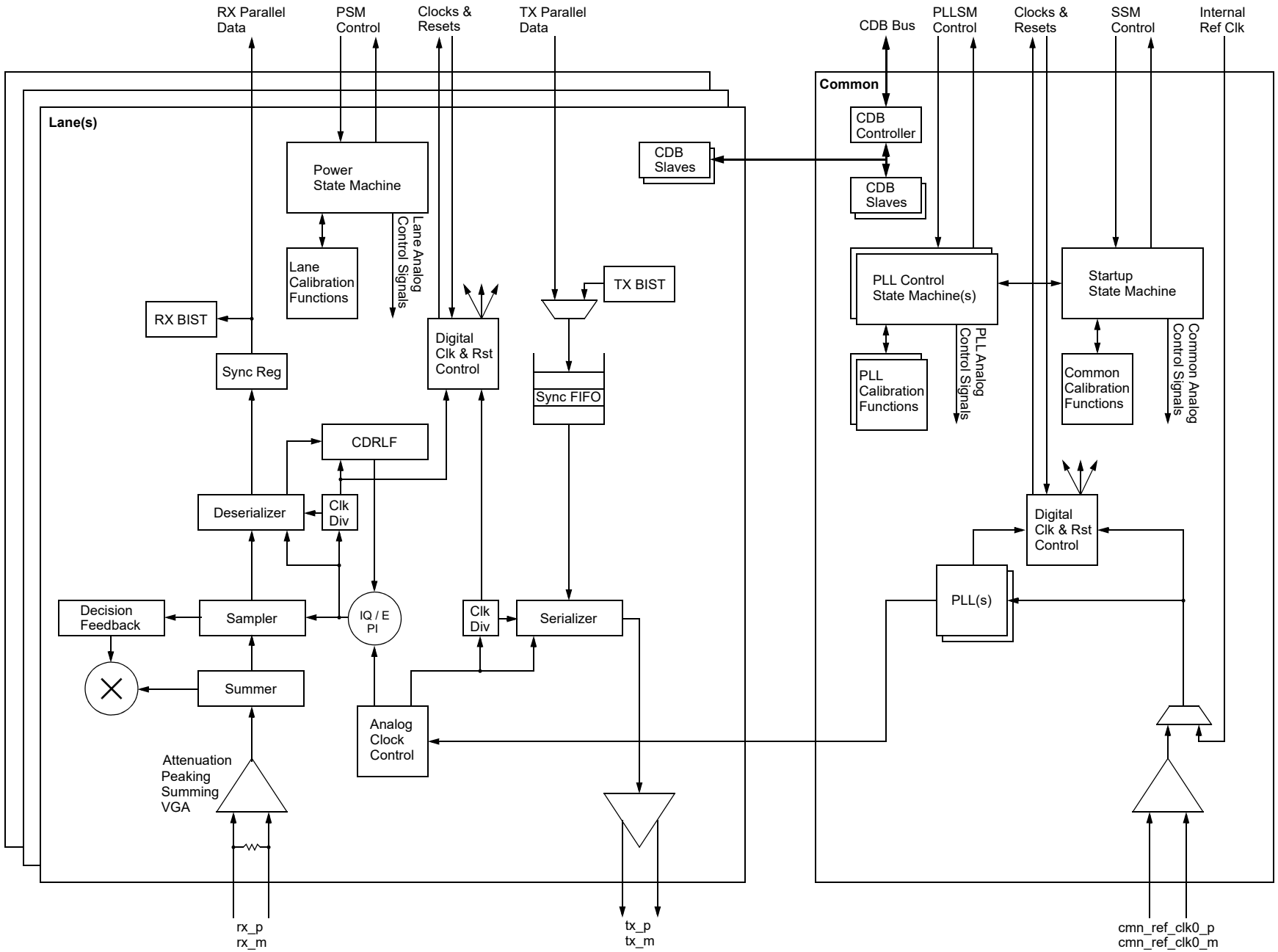

Figure 4: PMA macro block diagram

2.2.2 PMA Block Descriptions

2.2.2.1 Common

- **Control and diagnostic bus (CDB)**: The CDB is an internal version of a AMBA APB bus, that is used to access registers throughout the PMA.
- **Startup state machine**: This state machine controls the sequencing of various control and calibration functions in the PMA common. The sequences that are controlled are initial power up, low power suspend entry and low power suspend exit.
- **Common calibration functions**: These functions control the calibration of multiple analog functions that exist in the PMA common. These include the following.
  - Bandgap.
  - TX resistance.
  - RX resistance.
  - Signal detect clock.
- **PLL control state machine(s)**: This state machine controls the sequencing of control and calibration functions associated with the PLL(s) in the PMA. There is one instance of this state machine per PLL in the PMA. The sequences that are controlled are initial power up, low power suspend entry and low power suspend exit.
- **PLL calibration functions**: This controls the calibration of the PLL VCO(s) that exist in common. There is one instance of these functions per PLL in the PMA.
- **PLL(s)**: The PLL(s) in the PMA are used to generate high speed clocks from the reference clocks. These high speed clocks are used in the high speed data transmit and receive functions, as well as digital functions that require clocks at a frequency that is faster than the reference clock.
- **Reference clock receiver**: Analog receiver for the reference clock driven on the external reference clock bumps or internal core side pins. The selected received reference clock is driven to the PLL(s), digital logic, and out on core side output pins.

2.2.2.2 Lanes: Shared Across TX and RX Paths

- **Power state machine**: This state machine controls the sequencing of various control and calibration functions in a PMA lane. The sequences that are controlled are initial power up, and entry to and exit from various protocol specific low power states.
- **Lane calibration functions**: These functions control the calibration of multiple analog functions that exist in a PMA lane. These include the following.
  - Signal detect.
  - Sampler latch.

2.2.2.3 Lanes: Transmitter Path

- **TX BIST**: This generates user defined and PRBS data patterns for BIST testing.
- **Sync FIFO**: When transmitting parallel data, the input clock from the PHY is the same frequency, but not necessarily the same phase as the clock associated with the serializer function. This FIFO passes the parallel transmit data from the input clock domain to the serializer clock domain.
- **Serializer**: This function converts the parallel transmit data from the PHY interface to high speed serial data, to be driven on the differential serial transmitter pins.
- **TX driver**: Analog full swing driver supporting pre and post emphasis with margining.

2.2.2.4 Lanes: Receiver Path

- **RX receiver, attenuation, peaking, summing, VGA, summer, sampler, decision feedback:** Analog receiver that supports a combination of CTLE and DFE functions for effective channel equalization.
- **IQ / E Phase Interpolator (PI) / CDRLF**: These functions are used to align the internal high speed sampling clock with the incoming serial data stream. The IQ PI is used for the functional data path, and the E PI is used for the receiver eye measurement and receiver equalization functions.
- **Deserializer**: This function converts the high speed serial data received on the differential serial receiver pins to parallel receive data that is ultimately driven to the PHY interface.
- **Sync register**: This is a register used to synchronize the parallel receive data driven from the analog deserializer, in order to provide a consistent timing interface for the data as it is driven to the PHY interface.
- **RX BIST**: This receives and tests user defined and PRBS data patterns for BIST testing. If data mis-compares are detected, errors are reported.

3 Configuration Options

3.1 Number of lanes

The PMA hard macro (and by extension the PHY) supports from 1 to 8 lanes. The lane configuration is selected based on the number of lanes on either side of the common block (<# of lanes to left of common><# of lanes to right of common>). For example, a 4 lane macro can have 2 lanes on either side of common, which is a 22, 4 lanes to the left of common, a 40 or 4 lanes to the right of common, a 04.

3.2 Soft IP

The PHY supports various configuration options which reduce or eliminate one of the interfaces (and its related logic) for use-cases that don't require full multi-protocol functionality. Configuration options supported:

- Full multi-protocol - PIPE + full Raw SerDes interface
- Reduced multi-protocol - PIPE + reduced Raw SerDes interface (optimized for Ethernet)
- PIPE-only
- Raw SerDes only (full interface)
- Raw SerDes only (reduced)

The PIPE PCS logic can be further optimized (for any configuration supporting PIPE), such that only a subset of the PIPE protocols are supported:

PCIe Gen1/2 only	PCIe Gen1/2/3	USB Gen1 only	USB Gen1/2	SATA
x				
	x			
		x		
			x	
				x
x		x		
x				x
x		x		x
	x		x	
	x			x
		x		x
			x	x
x	x	x	x	x

Table 3: Supported PIPE PCS configuration options

4 Clocks and Reset

4.1 Clocks

4.1.1 Reference clock inputs

The PHY has the following reference clock inputs:

Name	Description
cmn_refclk_<p/m>	Differential reference clock bumps (external)
pma_cmn_refclk_int0	Single-ended SoC-side reference clock 0 (internal)
pma_cmn_refclk_int1	Single-ended SoC-side reference clock 1 (internal)

Table 4: PHY reference clock inputs

Features:

- Supports reference clock frequencies of 19.2, 24, 25, 100, 125 or 156.25 MHz.
- Supports separate reference clock input for each PLL.

4.1.2 APB clock

Name	Description
apb_pclk	APB clock input - 200 MHz (max)

Table 5: APB clock input

The APB clock input is the primary clock source for the PHY APB registers.

4.1.3 TAP clock

Name	Description
tap_tck	TAP clock input - 100 MHz (max)

Table 6: TAP clock input

The TAP clock input is the clock source for the TAP controller and an alternate clock source for the PHY APB registers.

4.1.4 Data path clocks

Name	Direction	Description
pipe_l{nn:00}_clk	output	Per-lane PIPE clock - 625 MHz (max). For PCIe multi-lane links, the master lane of the link provides the clock for all lanes in the link. • PCIe Gen 1 = 125 MHz (16-bit) / 62.5 MHz (32-bit) • PCIe Gen 2 = 250 MHz (16-bit) / 125 MHz (32-bit) • PCIe Gen 3 = 500 MHz (15-bit) / 250 MHz (32-bit) • USB3 Gen 1 = 250 MHz (16-bit) / 125 MHz (32-bit) • USB3 Gen 2 = 625 MHz (16-bit) / 312.5 MHz (32-bit) • SATA Gen 1 = 75 MHz (16-bit) / 37.5 MHz (32-bit) • SATA Gen 2 = 150 MHz (16-bit) / 75 MHz (32-bit) • SATA Gen 3 = 300 MHz (16-bit) / 150 MHz (32-bit)
pma_pllclk_datart_ln_{n:0}	output	Per-lane data rate clock - 625 MHz (max). PMA parallel data clock for the currently selected data rate for the configured protocol. For example, for PCIe, it is 125, 250 or 500 MHz for Gen 1, 2 and 3 respectively.
pma_pllclk_fullrt_ln_{n:0}	output	Per-lane full rate clock - 810 MHz (max). Fastest data rate clock for all data rates of the configured protocol. For example, for PCIe, it is 500 MHz, for USB3 it is 625 MHz and for DP Tx it is 810 MHz.
pma_tx_td_clk_ln_{n:0}	input	Raw SerDes transmit data clock. Raw SerDes transmit data is synchronous to this clock. This clock must be driven from the associated pma_pllclk_datart_ln_{n:0} PHY clock output. 405 MHz (max) corresponding to DP Tx HDR3 data rate (8.1 Gbps)
pma_rx_rd_clk_ln_{n:0}	output	Raw SerDes receive data clock. Raw SerDes receive data is synchronous to this clock. 312.5 MHz (max) corresponding to JESD204B 6.25 Gbps.
pma_rx_rd_clk2x_ln_{n:0}	output	Raw SerDes 2x receive data clock. 2x frequency of pma_rx_rd_clk_ln_{n:0}, i.e. 10-bit data rate clock. 625 MHz (max) corresponding to JESD204B 6.25 Gbps.

Table 7: Data Path Clocks

4.2 Resets

Name	Description
phy_reset_n	Resets all PHY logic except APB registers and TAP controller.
apb_reset_n	Resets all PHY APB registers.
tap_trst_n	Resets TAP controller
phy_l{00:nn}_reset_n	Link reset (1 per lane) - resets all logic for each lane in the associated link.

Table 8: Reset Signals

All PHY resets are low active with asynchronous assertion / synchronous de-assertion. The de-assertion synchronization for each reset, except for tap_trst_n, is performed in the PHY.

5 Performance, Power and Area

5.1 Area

5.1.1 Common Area Target

- 324um x 720um hard macro common block

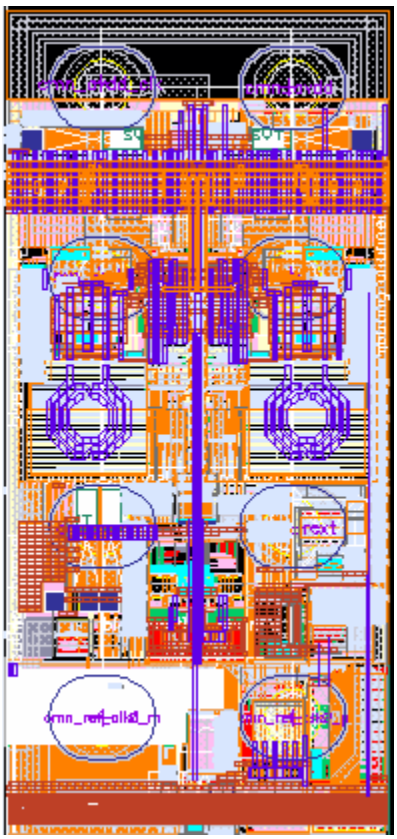

Figure 5: Common Area

5.1.2 Lane Area Target

324um x 720um hard macro transceiver block

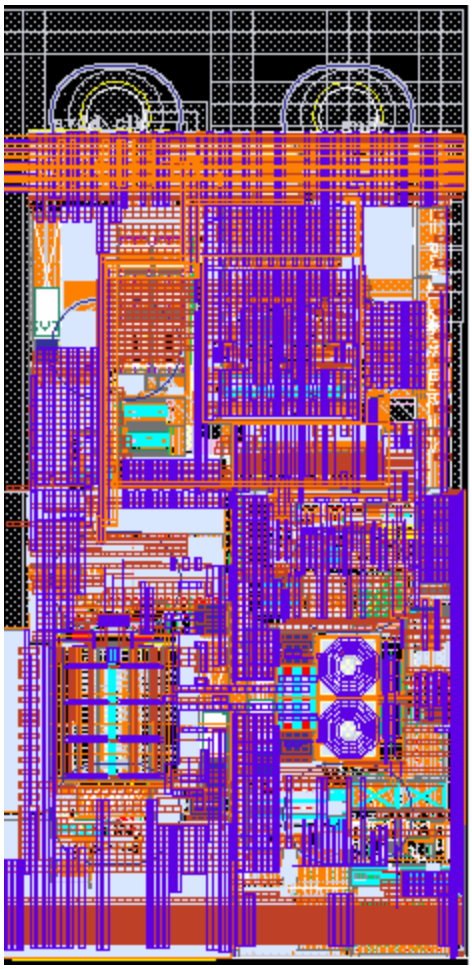

Figure 6: Lane Area

5.2 Power Targets

Name	CMN TT	CMN Max	Units	Description
PLN PCIe Gen 3	21.7	39.7	mW	CMN Power, PCIe Gen 3 A0 mode,1PLL
PLN PCIe Gen 2	20.6	40.6	mW	CMN Power, PCIe Gen 2 A0 mode,1PLL
PLN PCIe Gen 1	20.8	37.7	mW	CMN Power, PCIe Gen 1 A0 mode,1PLL
PLN USB3.1 Gen 2	20.2	38.1	mW	CMN Power,USB3.1 Gen 2 A0 mode,1PLL
PLN USB 3.1 Gen 1	20.1	40.2	mW	CMN Power,USB3.1 Gen 1 A0 mode,1PLL
PLN USXGMII	24	33	mW	CMN Power, USXGMII A0 mode, 1PLL
PLN XFI	23	27.5	mW	CMN Power, XFI A0 mode, 1PLL
PLN XAUI	20.8	31.6	mW	CMN Power, XAUI A0 mode, 1PLL
PLN SGMII	21.1	38.1	mW	CMN Power, SGMII A0 mode, 1PLL
PLN SATA Gen 3	17.2	27.4	mW	CMN Power, SATA Gen 3 A0 mode, 1PLL
PLN SATA Gen 2	16.5	27.1	mW	CMN Power, SATA Gen 2 A0 mode, 1 PLL
PLN SATA Gen 1	16.1	25.8	mW	CMN Power, SATA Gen 1 A0 mode, 1 PLL
PLN DP (8.1G)	21.7	39.7	mW	CMN Power, DP 8.1G A0 mode, 1 PLL
PLN DP (5.4G)	20.6	40.6	mW	CMN Power, DP 5.4G A0 mode, 1 PLL
PLN DP (2.7G)	20.8	37.7	mW	CMN Power, DP 2.7G A0 mode, 1 PLL
PLN DP (1.62G)	20.8	37.7	mW	CMN Power, DP 1.62G A0 mode, 1 PLL
PLN eDP (8.1G)	21.7	39.7	mW	CMN Power, eDP 8.1G A0 mode, 1 PLL
PLN eDP (5.4G)	20.6	40.6	mW	CMN Power, eDP 5.4G A0 mode, 1 PLL
PLN eDP (4.32G)	20.6	40.6	mW	CMN Power, eDP 4.32G A0 mode, 1 PLL
PLN eDP (3.24G)	20.7	39	mW	CMN Power, eDP 3.24G A0 mode, 1 PLL
PLN eDP (2.7G)	20.8	37.7	mW	CMN Power , eDP 2.7G A0 mode, 1 PLL
PLN eDP (2.43G)	20.8	37.7	mW	CMN Power ,eDP 2.43G A0 mode, 1 PLL
PLN eDP (2.16G)	20.8	37.7	mW	CMN Power ,eDP 2.16G A0 mode, 1 PLL
PLN eDP (1.62G)	20.8	37.7	mW	CMN Power ,eDP 1.62G A0 mode, 1 PLL
Note: Vtyp=0.80V/1.2V, Vmax = 0.88V/1.98V, Ttyp = 25C, Tmax = 125C, unless otherwise noted.				

Table 9: CMN A0 Power Specification for 0.80V/1.2V Supplies (1PLL)

Name	CMN TT	CMN Max	Units	Description
PLN PCIe Gen 3	35.81	65.11	mW	CMN Power,PCIe Gen 3 A0 mode,2PLL
PLN PCIe Gen 2	33.99	66.58	mW	CMN Power,PCIe Gen 2 A0 mode,2PLL
PLN PCIe Gen 1	34.32	61.83	mW	CMN Power,PCIe Gen 1 A0 mode,2PLL
PLN USB3.1 Gen 2	33.33	62.48	mW	CMN Power,USB3.1 Gen 2 A0 mode,2PLL
PLN USB 3.1 Gen 1	33.17	65.93	mW	CMN Power,USB3.1 Gen 1 A0 mode,2PLL
PLN USXGMII	39.60	54.12	mW	CMN Power, USXGMII A0 mode, 2PLL
PLN XFI	37.95	45.10	mW	CMN Power, XFI A0 mode, 2PLL
PLN XAUI	34.32	51.82	mW	CMN Power, XAUI A0 mode, 2PLL
PLN SGMII	34.82	62.48	mW	CMN Power, SGMII A0 mode, 2PLL
PLN SATA Gen 3	28.38	44.94	mW	CMN Power, SATA Gen 3 A0 mode, 2PLL
PLN SATA Gen 2	27.23	44.44	mW	CMN Power,SATA Gen 2 A0 mode, 2 PLL
PLN SATA Gen 1	26.57	42.31	mW	CMN Power,SATA Gen 1 A0 mode, 2 PLL
PLN DP (8.1G)	35.81	65.11	mW	CMN Power, DP 8.1G A0 mode, 2 PLL
PLN DP (5.4G)	33.99	66.58	mW	CMN Power, DP 5.4G A0 mode, 2 PLL
PLN DP (2.7G)	34.32	61.83	mW	CMN Power, DP 2.7G A0 mode, 2 PLL
PLN DP (1.62G)	34.32	61.83	mW	CMN Power,DP 1.62G A0 mode, 2 PLL
PLN eDP (8.1G)	35.81	65.11	mW	CMN Power , eDP 8.1G A0 mode, 2 PLL
PLN eDP (5.4G)	33.99	66.58	mW	CMN Power ,eDP 5.4G A0 mode, 2 PLL
PLN eDP (4.32G)	33.99	66.58	mW	CMN Power ,eDP 4.32G A0 mode, 2 PLL
PLN eDP (3.24G)	34.16	63.96	mW	CMN Power ,eDP 3.24G A0 mode, 2 PLL
PLN eDP (2.7G)	34.32	61.83	mW	CMN Power , eDP 2.7G A0 mode, 2 PLL
PLN eDP (2.43G)	34.32	61.83	mW	CMN Power ,eDP 2.43G A0 mode, 2 PLL
PLN eDP (2.16G)	34.32	61.83	mW	CMN Power ,eDP 2.16G A0 mode, 2 PLL
PLN eDP (1.62G)	34.32	61.83	mW	CMN Power ,eDP 1.62G A0 mode, 2 PLL
Note: Vtyp=0.80V/1.2V, Vmax = 0.88V/1.98V, Ttyp = 25C, Tmax = 125C, unless otherwise noted.				

Table 10: CMN A0 Power Specification for 0.80V/1.2V Supplies (2PLL)

Name	Typ	Max	Units	Description
PLN PCIe Gen 3	51.7	74.2	mW	Power consumed in the PCIe Gen 3 A0 mode
PLN PCIe Gen 2	34.3	54.1	mW	Power consumed in the PCIe Gen 2 A0 mode
PLN PCIe Gen 1	26	41.4	mW	Power consumed in the PCIe Gen 1 A0 mode
PLN USB3.1 Gen 2	62	82.3	mW	Power consumed in the USB3.1 Gen 2 A0 mode
PLN USB 3.1 Gen 1	39	54	mW	Power consumed in the USB3.1 Gen 1 A0 mode
PLN USXGMII	57.8	89.6	mW	Power consumed in the USXGMII A0 mode
PLN XFI	51.9	70.1	mW	Power consumed in the XFI A0 mode
PLN XAUI	29.5	49.8	mW	Power consumed in the XAUI A0 mode
PLN SGMII	19.6	31.7	mW	Power consumed in the SGMII A0 mode
PLN SATA Gen 3	31.7	45.6	mW	Power consumed in the SATA Gen 3 A0 mode
PLN SATA Gen 2	24.3	34.9	mW	Power consumed in the SATA Gen 2 A0 mode
PLN SATA Gen 1	18.6	27.1	mW	Power consumed in the SATA Gen 1 A0 mode
PLN DP (8.1G)	16.7	26.7	mW	Power consumed in the DP 8.1G A0 mode
PLN DP (5.4G)	14.7	21	mW	Power consumed in the DP 5.4G A0 mode
PLN DP (2.7G)	11.9	19.6	mW	Power consumed in the DP 2.7G A0 mode
PLN DP (1.62G)	9.6	16.6	mW	Power consumed in the DP 1.62G A0 mode
PLN eDP (8.1G)	13.6	20.6	mW	Power consumed in the eDP 8.1G A0 mode
PLN eDP (5.4G)	11.8	16.2	mW	Power consumed in the eDP 5.4G A0 mode
PLN eDP (4.32G)	11.5	15.9	mW	Power consumed in the eDP 4.32G A0 mode
PLN eDP (3.24G)	9.8	13.1	mW	Power consumed in the eDP 3.24G A0 mode
PLN eDP (2.7G)	9.4	16.1	mW	Power consumed in the eDP 2.7G A0 mode
PLN eDP (2.43G)	8.5	15	mW	Power consumed in the eDP 2.43G A0 mode
PLN eDP (2.16G)	7.8	13.6	mW	Power consumed in the eDP 2.16G A0 mode
PLN eDP (1.62G)	7.4	13.4	mW	Power consumed in the eDP 1.62G A0 mode
Note: Vtyp=0.80V/1.2V, Vmax = 0.88V/1.98V, Ttyp = 25C, Tmax = 125C, unless otherwise noted.				

Table 11: Lane A0 power Specification for 0.80V/1.2V Supplies

Name	Typical Currents (mA)					Maximum Currents (mA)					Units
	LANE		COMMON			LANE		COMMON			
	AVDD_D	AVDD_CLK	AVDD_H	AVDD_D	AVDD_CLK	AVDD_D	AVDD_CLK	AVDD_H	AVDD_D	AVDD_CLK	
PLN PCIe Gen 3	40.68	23.95	11.42	5.58	4.42	57.91	26.41	14.14	7.59	5.72	mA
PLN PCIe Gen 2	28.40	14.47	12.35	5.09	2.14	42.56	18.92	14.74	6.72	6.24	mA
PLN PCIe Gen 1	20.94	11.56	13.59	3.88	1.73	32.34	14.70	14.61	6.61	3.36	mA
PLN USB3.1 Gen 2	48.71	28.79	10.05	5.49	4.69	62.68	30.84	12.96	7.69	6.44	mA
PLN USB 3.1 Gen 1	32.27	16.48	12.05	4.96	2.09	42.48	18.88	14.60	6.66	6.18	mA
PLN USXGMII	45.41	26.84	11.92	5.75	4.93	65.86	35.95	11.94	6.52	5.57	mA
PLN XFI	40.78	24.10	9.93	4.79	4.11	51.53	28.13	11.44	6.25	5.34	mA
PLN XAUI	23.77	13.11	12.58	4.95	2.65	39.77	16.82	13.37	4.14	1.81	mA
PLN SGMII	15.79	8.71	12.96	7.69	6.44	24.36	11.66	13.61	4.15	1.81	mA
PLN SATA Gen 3	26.45	13.18	9.49	5.12	2.15	36.65	15.17	9.55	5.18	4.46	mA
PLN SATA Gen 2	19.58	10.80	9.19	4.84	2.00	27.27	12.39	9.83	4.66	4.02	mA
PLN SATA Gen 1	14.98	8.27	8.97	4.73	1.95	21.17	9.62	8.98	4.86	4.26	mA
PLN DP (8.1G)	17.54	3.34	11.42	5.58	4.42	25.79	4.55	14.34	6.92	5.93	mA
PLN DP (5.4G)	15.44	2.94	10.96	5.36	3.96	20.28	3.58	14.79	7.14	5.71	mA
PLN DP (2.7G)	12.50	2.38	11.06	5.41	4.00	18.93	3.34	13.74	6.63	5.30	mA
PLN DP (1.62G)	10.08	1.92	11.06	5.41	4.00	16.03	2.83	13.74	6.63	5.30	mA
PLN eDP (8.1G)	14.28	2.72	11.42	5.58	4.42	19.90	3.51	14.34	6.92	5.93	mA
PLN eDP (5.4G)	12.39	2.36	10.96	5.36	3.96	15.65	2.76	14.79	7.14	5.71	mA
PLN eDP (4.32G)	12.08	2.30	11.01	5.38	3.98	15.36	2.71	14.21	6.86	5.49	mA
PLN eDP (3.24G)	10.29	1.96	10.96	5.36	3.96	12.65	2.23	14.79	7.14	5.71	mA
PLN eDP (2.7G)	9.51	2.24	11.06	5.41	4.00	15.55	2.74	13.74	6.63	5.30	mA
PLN eDP (2.43G)	8.55	2.08	11.06	5.41	4.00	14.49	2.56	13.74	6.63	5.30	mA
PLN eDP (2.16G)	7.86	1.89	11.06	5.41	4.00	13.14	2.32	13.74	6.63	5.30	mA
PLN eDP (1.62G)	7.40	1.85	11.06	5.41	4.00	12.94	2.28	13.74	6.63	5.30	mA
Note: Vtyp=0.80V/1.2V, Vmax = 0.88V/1.98V, Ttyp = 25C, Tmax = 125C, unless otherwise noted.											

Table 12: CMN/Lane A0 Current on Various Supply Domains for 0.80V/1.2V Supplies

Name	CMN TT	CMN Max	Units	Description
PLN PCIe Gen 3	21.7	40.31	mW	CMN Power,PCIe Gen 3 A1 mode,1PLL
PLN PCIe Gen 2	20.8	42.27	mW	CMN Power,PCIe Gen 2 A1 mode,1PLL
PLN PCIe Gen 1	18.8	37.06	mW	CMN Power,PCIe Gen 1 A1 mode,1PLL
PLN USB3.1 Gen 2	23.1	42.3	mW	CMN Power,USB3.1 Gen 2 A1 mode,1PLL
PLN USB 3.1 Gen 1	20.8	42	mW	CMN Power,USB3.1 Gen 1 A1 mode,1PLL
PLN USXGMII	N/A	N/A	mW	CMN Power, USXGMII A1 mode, 1PLL
PLN XFI	N/A	N/A	mW	CMN Power, XFI A1 mode, 1PLL
PLN XAUI	N/A	N/A	mW	CMN Power, XAUI A1 mode, 1PLL
PLN SGMII	N/A	N/A	mW	CMN Power, SGMII A1 mode, 1PLL
PLN SATA Gen 3	17.2	30.69	mW	CMN Power, SATA Gen 3 A1 mode, 1PLL
PLN SATA Gen 2	16.5	27.1	mW	CMN Power,SATA Gen 2 A1 mode, 1 PLL
PLN SATA Gen 1	16.1	25.8	mW	CMN Power,SATA Gen 1 A1 mode, 1 PLL
PLN DP (8.1G)	N/A	N/A	mW	CMN Power, DP 8.1G A1 mode, 1 PLL
PLN DP (5.4G)	N/A	N/A	mW	CMN Power, DP 5.4G A1 mode, 1 PLL
PLN DP (2.7G)	N/A	N/A	mW	CMN Power, DP 2.7G A1 mode, 1 PLL
PLN DP (1.62G)	N/A	N/A	mW	CMN Power,DP 1.62G A1 mode, 1 PLL
PLN eDP (8.1G)	N/A	N/A	mW	CMN Power , eDP 8.1G A1 mode, 1 PLL
PLN eDP (5.4G)	N/A	N/A	mW	CMN Power ,eDP 5.4G A1 mode, 1 PLL
PLN eDP (4.32G)	N/A	N/A	mW	CMN Power ,eDP 4.32G A1 mode, 1 PLL
PLN eDP (3.24G)	N/A	N/A	mW	CMN Power ,eDP 3.24G A1 mode, 1 PLL
PLN eDP (2.7G)	N/A	N/A	mW	CMN Power , eDP 2.7G A1 mode, 1 PLL
PLN eDP (2.43G)	N/A	N/A	mW	CMN Power ,eDP 2.43G A1 mode, 1 PLL
PLN eDP (2.16G)	N/A	N/A	mW	CMN Power ,eDP 2.16G A1 mode, 1 PLL
PLN eDP (1.62G)	N/A	N/A	mW	CMN Power ,eDP 1.62G A1 mode, 1 PLL
Note: Vtyp=0.80V/1.2V, Vmax = 0.88V/1.98V, Ttyp = 25C, Tmax = 125C, unless otherwise noted.				

Table 13: CMN A1 power Specification for 0.80V/1.2V Supplies (1PLL)

Name	CMN TT	CMN Max	Units	Description
PLN PCIe Gen 3	35.59	66.11	mW	CMN Power,PCIe Gen 3 A1 mode,2PLL
PLN PCIe Gen 2	34.11	69.32	mW	CMN Power,PCIe Gen 2 A1 mode,2PLL
PLN PCIe Gen 1	30.83	60.78	mW	CMN Power,PCIe Gen 1 A1 mode,2PLL
PLN USB3.1 Gen 2	37.88	69.37	mW	CMN Power,USB3.1 Gen 2 A1 mode,2PLL
PLN USB 3.1 Gen 1	34.11	68.88	mW	CMN Power,USB3.1 Gen 1 A1 mode,2PLL
PLN USXGMII	N/A	N/A	mW	CMN Power, USXGMII A1 mode, 2PLL
PLN XFI	N/A	N/A	mW	CMN Power, XFI A1 mode, 2PLL
PLN XAUI	N/A	N/A	mW	CMN Power, XAUI A1 mode, 2PLL
PLN SGMII	N/A	N/A	mW	CMN Power, SGMII A1 mode, 2PLL
PLN SATA Gen 3	28.21	50.33	mW	CMN Power, SATA Gen 3 A1 mode, 2PLL
PLN SATA Gen 2	27.06	44.44	mW	CMN Power,SATA Gen 2 A1 mode, 2 PLL
PLN SATA Gen 1	26.40	42.31	mW	CMN Power,SATA Gen 1 A1 mode, 2 PLL
PLN DP (8.1G)	N/A	N/A	mW	CMN Power, DP 8.1G A1 mode, 2 PLL
PLN DP (5.4G)	N/A	N/A	mW	CMN Power, DP 5.4G A1 mode, 2 PLL
PLN DP (2.7G)	N/A	N/A	mW	CMN Power, DP 2.7G A1 mode, 2 PLL
PLN DP (1.62G)	N/A	N/A	mW	CMN Power,DP 1.62G A1 mode, 2 PLL
PLN eDP (8.1G)	N/A	N/A	mW	CMN Power , eDP 8.1G A1 mode, 2 PLL
PLN eDP (5.4G)	N/A	N/A	mW	CMN Power ,eDP 5.4G A1 mode, 2 PLL
PLN eDP (4.32G)	N/A	N/A	mW	CMN Power ,eDP 4.32G A1 mode, 2 PLL
PLN eDP (3.24G)	N/A	N/A	mW	CMN Power ,eDP 3.24G A1 mode, 2 PLL
PLN eDP (2.7G)	N/A	N/A	mW	CMN Power , eDP 2.7G A1 mode, 2 PLL
PLN eDP (2.43G)	N/A	N/A	mW	CMN Power ,eDP 2.43G A1 mode, 2 PLL
PLN eDP (2.16G)	N/A	N/A	mW	CMN Power ,eDP 2.16G A1 mode, 2 PLL
PLN eDP (1.62G)	N/A	N/A	mW	CMN Power ,eDP 1.62G A1 mode, 2 PLL
Note: Vtyp=0.80V/1.2V, Vmax = 0.88V/1.98V, Ttyp = 25C, Tmax = 125C, unless otherwise noted.				

Table 14: CMN A1 power Specification for 0.80V/1.2V Supplies (2PLL)

Name	Typ	Max	Units	Description
PLN PCIe Gen 3	42.9	66.5	mW	Power consumed in the PCIe Gen 3 A1 mode
PLN PCIe Gen 2	26.1	42	mW	Power consumed in the PCIe Gen 2 A1 mode
PLN PCIe Gen 1	18.2	32.6	mW	Power consumed in the PCIe Gen 1 A1 mode
PLN USB3.1 Gen 2	48.4	74.7	mW	Power consumed in the USB3.1 Gen 2 A1 mode
PLN USB 3.1 Gen 1	33	52.8	mW	Power consumed in the USB3.1 Gen 1 A1 mode
PLN USXGMII	N/A	N/A	mW	Power consumed in the USXGMII A1 mode
PLN XFI	N/A	N/A	mW	Power consumed in the XFI A1 mode
PLN XAUI	N/A	N/A	mW	Power consumed in the XAUI A1 mode
PLN SGMII	N/A	N/A	mW	Power consumed in the SGMII A1 mode
PLN SATA Gen 3	31.1	44.6	mW	Power consumed in the SATA Gen 3 A1 mode
PLN SATA Gen 2	19.5	29.2	mW	Power consumed in the SATA Gen 2 A1 mode
PLN SATA Gen 1	13.6	21	mW	Power consumed in the SATA Gen 1 A1 mode
PLN DP (8.1G)	N/A	N/A	mW	Power consumed in the DP 8.1G A1 mode
PLN DP (5.4G)	N/A	N/A	mW	Power consumed in the DP 5.4G A1 mode
PLN DP (2.7G)	N/A	N/A	mW	Power consumed in the DP 2.7G A1 mode
PLN DP (1.62G)	N/A	N/A	mW	Power consumed in the DP 1.62G A1 mode
PLN eDP (8.1G)	N/A	N/A	mW	Power consumed in the eDP 8.1G A1 mode
PLN eDP (5.4G)	N/A	N/A	mW	Power consumed in the eDP 5.4G A1 mode
PLN eDP (4.32G)	N/A	N/A	mW	Power consumed in the eDP 4.32G A1 mode
PLN eDP (3.24G)	N/A	N/A	mW	Power consumed in the eDP 3.24G A1 mode
PLN eDP (2.7G)	N/A	N/A	mW	Power consumed in the eDP 2.7G A1 mode
PLN eDP (2.43G)	N/A	N/A	mW	Power consumed in the eDP 2.43G A1 mode
PLN eDP (2.16G)	N/A	N/A	mW	Power consumed in the eDP 2.16G A1 mode
PLN eDP (1.62G)	N/A	N/A	mW	Power consumed in the eDP 1.62G A1 mode
Note: Vtyp=0.80V/1.2V, Vmax = 0.88V/1.98V, Ttyp = 25C, Tmax = 125C, unless otherwise noted.				

Table 15: Lane A1 power Specification for 0.80V/1.2V Supplies

Name	Typical Currents (mA)					Maximum Currents (mA)					Units
	LANE		COMMON			LANE		COMMON			
	AVDD_D	AVDD_CLK	AVDD_H	AVDD_D	AVDD_CLK	AVDD_D	AVDD_CLK	AVDD_H	AVDD_D	AVDD_CLK	
PLN PCIe Gen 3	28.83	24.79	11.42	5.58	4.42	45.98	29.59	14.36	7.70	5.80	mA
PLN PCIe Gen 2	17.42	15.20	12.47	5.14	2.16	26.98	20.75	15.35	7.00	6.50	mA
PLN PCIe Gen 1	10.62	12.13	12.29	3.51	1.56	20.28	16.76	14.36	6.50	3.30	mA
PLN USB3.1 Gen 2	31.37	29.13	12.15	5.94	4.71	50.26	34.62	14.35	8.59	7.19	mA
PLN USB 3.1 Gen 1	21.99	19.26	12.47	5.14	2.16	33.91	26.09	15.25	6.95	6.46	mA
PLN USXGMII	N/A	N/A	N/A	N/A	N/A	N/A	N/A	N/A	N/A	N/A	mA
PLN XFI	N/A	N/A	N/A	N/A	N/A	N/A	N/A	N/A	N/A	N/A	mA
PLN XAUI	N/A	N/A	N/A	N/A	N/A	N/A	N/A	N/A	N/A	N/A	mA
PLN SGMII	N/A	N/A	N/A	N/A	N/A	N/A	N/A	N/A	N/A	N/A	mA
PLN SATA Gen 3	25.95	12.93	9.49	5.12	2.15	35.85	14.83	10.70	5.80	5.00	mA
PLN SATA Gen 2	15.71	8.67	9.19	4.84	2.00	22.81	10.37	9.83	4.66	4.02	mA
PLN SATA Gen 1	11.26	5.74	8.97	4.73	1.95	16.41	7.46	8.98	4.86	4.26	mA
PLN DP (8.1G)	N/A	N/A	N/A	N/A	N/A	N/A	N/A	N/A	N/A	N/A	mA
PLN DP (5.4G)	N/A	N/A	N/A	N/A	N/A	N/A	N/A	N/A	N/A	N/A	mA
PLN DP (2.7G)	N/A	N/A	N/A	N/A	N/A	N/A	N/A	N/A	N/A	N/A	mA
PLN DP (1.62G)	N/A	N/A	N/A	N/A	N/A	N/A	N/A	N/A	N/A	N/A	mA
PLN eDP (8.1G)	N/A	N/A	N/A	N/A	N/A	N/A	N/A	N/A	N/A	N/A	mA
PLN eDP (5.4G)	N/A	N/A	N/A	N/A	N/A	N/A	N/A	N/A	N/A	N/A	mA
PLN eDP (4.32G)	N/A	N/A	N/A	N/A	N/A	N/A	N/A	N/A	N/A	N/A	mA
PLN eDP (3.24G)	N/A	N/A	N/A	N/A	N/A	N/A	N/A	N/A	N/A	N/A	mA
PLN eDP (2.7G)	N/A	N/A	N/A	N/A	N/A	N/A	N/A	N/A	N/A	N/A	mA
PLN eDP (2.43G)	N/A	N/A	N/A	N/A	N/A	N/A	N/A	N/A	N/A	N/A	mA
PLN eDP (2.16G)	N/A	N/A	N/A	N/A	N/A	N/A	N/A	N/A	N/A	N/A	mA
PLN eDP (1.62G)	N/A	N/A	N/A	N/A	N/A	N/A	N/A	N/A	N/A	N/A	mA
Note: Vtyp=0.80V/1.2V, Vmax = 0.88V/1.98V, Ttyp = 25C, Tmax = 125C, unless otherwise noted.											

Table 16: CMN/Lane A1 Current on Various Supply Domains for 0.80V/1.2V Supplies

Name	CMN TT	CMN Max	Units	Description
PLN PCIe Gen 3	21.7	40.31	mW	CMN Power,PCIe Gen 3 A2 mode,1PLL
PLN PCIe Gen 2	20.8	42.27	mW	CMN Power,PCIe Gen 2 A2 mode,1PLL
PLN PCIe Gen 1	18.8	37.06	mW	CMN Power,PCIe Gen 1 A2 mode,1PLL
PLN USB3.1 Gen 2	23.1	42.3	mW	CMN Power,USB3.1 Gen 2 A2 mode,1PLL
PLN USB 3.1 Gen 1	23.1	42	mW	CMN Power,USB3.1 Gen 1 A2 mode,1PLL
PLN USXGMII	N/A	N/A	mW	CMN Power, USXGMII A2 mode, 1PLL
PLN XFI	N/A	N/A	mW	CMN Power, XFI A2 mode, 1PLL
PLN XAUI	20.8	31.6	mW	CMN Power, XAUI A2 mode, 1PLL
PLN SGMII	N/A	N/A	mW	CMN Power, SGMII A2 mode, 1PLL
PLN SATA Gen 3	17.5	30.6	mW	CMN Power, SATA Gen 3 A2 mode, 1PLL
PLN SATA Gen 2	16.5	27.1	mW	CMN Power,SATA Gen 2 A2 mode, 1 PLL
PLN SATA Gen 1	16.1	25.8	mW	CMN Power,SATA Gen 1 A2 mode, 1 PLL
PLN DP (8.1G)	N/A	N/A	mW	CMN Power, DP 8.1G A2 mode, 1 PLL
PLN DP (5.4G)	N/A	N/A	mW	CMN Power, DP 5.4G A2 mode, 1 PLL
PLN DP (2.7G)	N/A	N/A	mW	CMN Power, DP 2.7G A2 mode, 1 PLL
PLN DP (1.62G)	N/A	N/A	mW	CMN Power,DP 1.62G A2 mode, 1 PLL
PLN eDP (8.1G)	N/A	N/A	mW	CMN Power , eDP 8.1G A2 mode, 1 PLL
PLN eDP (5.4G)	N/A	N/A	mW	CMN Power ,eDP 5.4G A2 mode, 1 PLL
PLN eDP (4.32G)	N/A	N/A	mW	CMN Power ,eDP 4.32G A2 mode, 1 PLL
PLN eDP (3.24G)	N/A	N/A	mW	CMN Power ,eDP 3.24G A2 mode, 1 PLL
PLN eDP (2.7G)	N/A	N/A	mW	CMN Power , eDP 2.7G A2 mode, 1 PLL
PLN eDP (2.43G)	N/A	N/A	mW	CMN Power ,eDP 2.43G A2 mode, 1 PLL
PLN eDP (2.16G)	N/A	N/A	mW	CMN Power ,eDP 2.16G A2 mode, 1 PLL
PLN eDP (1.62G)	N/A	N/A	mW	CMN Power ,eDP 1.62G A2 mode, 1 PLL
Note: Vtyp=0.80V/1.2V, Vmax = 0.88V/1.98V, Ttyp = 25C, Tmax = 125C, unless otherwise noted.				

Table 17: CMN A2 power Specification for 0.80V/1.2V Supplies (1PLL)

Name	CMN TT	CMN Max	Units	Description
PLN PCIe Gen 3	34.72	64.50	mW	CMN Power, PCIe Gen 3 A2 mode,2 PLL
PLN PCIe Gen 2	33.28	67.63	mW	CMN Power, PCIe Gen 2 A2 mode,2 PLL
PLN PCIe Gen 1	30.08	59.30	mW	CMN Power, PCIe Gen 1 A2 mode,2 PLL
PLN USB3.1 Gen 2	36.96	67.68	mW	CMN Power,USB3.1 Gen 2 A2 mode,2 PLL
PLN USB 3.1 Gen 1	36.96	67.20	mW	CMN Power,USB3.1 Gen 1 A2 mode,2 PLL
PLN USXGMII	N/A	N/A	mW	CMN Power, USXGMII A2 mode, 2 PLL
PLN XFI	N/A	N/A	mW	CMN Power, XFI A2 mode, 2 PLL
PLN XAUI	33.28	50.56	mW	CMN Power, XAUI A2 mode, 2 PLL
PLN SGMII	N/A	N/A	mW	CMN Power, SGMII A2 mode, 2 PLL
PLN SATA Gen 3	28.00	48.96	mW	CMN Power, SATA Gen 3 A2 mode, 2 PLL
PLN SATA Gen 2	26.40	43.36	mW	CMN Power, SATA Gen 2 A2 mode, 2 PLL
PLN SATA Gen 1	25.76	41.28	mW	CMN Power,SATA Gen 1 A2 mode, 2 PLL
PLN DP (8.1G)	N/A	N/A	mW	CMN Power, DP 8.1G A2 mode, 2 PLL
PLN DP (5.4G)	N/A	N/A	mW	CMN Power, DP 5.4G A2 mode, 2 PLL
PLN DP (2.7G)	N/A	N/A	mW	CMN Power, DP 2.7G A2 mode, 2 PLL
PLN DP (1.62G)	N/A	N/A	mW	CMN Power,DP 1.62G A2 mode, 2 PLL
PLN eDP (8.1G)	N/A	N/A	mW	CMN Power , eDP 8.1G A2 mode, 2 PLL
PLN eDP (5.4G)	N/A	N/A	mW	CMN Power ,eDP 5.4G A2 mode, 2 PLL
PLN eDP (4.32G)	N/A	N/A	mW	CMN Power ,eDP 4.32G A2 mode, 2 PLL
PLN eDP (3.24G)	N/A	N/A	mW	CMN Power ,eDP 3.24G A2 mode, 2 PLL
PLN eDP (2.7G)	N/A	N/A	mW	CMN Power , eDP 2.7G A2 mode, 2 PLL
PLN eDP (2.43G)	N/A	N/A	mW	CMN Power ,eDP 2.43G A2 mode, 2 PLL
PLN eDP (2.16G)	N/A	N/A	mW	CMN Power ,eDP 2.16G A2 mode, 2 PLL
PLN eDP (1.62G)	N/A	N/A	mW	CMN Power ,eDP 1.62G A2 mode, 2 PLL
Note: Vtyp=0.80V/1.2V, Vmax = 0.88V/1.98V, Ttyp = 25C, Tmax = 125C, unless otherwise noted.				

Table 18: CMN A2 power Specification for 0.80V/1.2V Supplies (2PLL)

Name	Typ	Max	Units	Description
PLN PCIe Gen 3	2.1	7.5	mW	Power consumed in the PCIe Gen 3 A2 mode
PLN PCIe Gen 2	1.9	7	mW	Power consumed in the PCIe Gen 2 A2 mode
PLN PCIe Gen 1	2	7.3	mW	Power consumed in the PCIe Gen 1 A2 mode
PLN USB3.1 Gen 2	2	13.1	mW	Power consumed in the USB3.1 Gen 2 A2 mode
PLN USB 3.1 Gen 1	2	13.1	mW	Power consumed in the USB3.1 Gen 1 A2 mode
PLN USXGMII	N/A	N/A	mW	Power consumed in the USXGMII A2 mode
PLN XFI	N/A	N/A	mW	Power consumed in the XFI A2 mode
PLN XAUI	2.2	7.7	mW	Power consumed in the XAUI A2 mode
PLN SGMII	N/A	N/A	mW	Power consumed in the SGMII A2 mode
PLN SATA Gen 3	4.3	7.75	mW	Power consumed in the SATA Gen 3 A2 mode
PLN SATA Gen 2	4.2	7.75	mW	Power consumed in the SATA Gen 2 A2 mode
PLN SATA Gen 1	4.2	7.75	mW	Power consumed in the SATA Gen 1 A2 mode
PLN DP (8.1G)	N/A	N/A	mW	Power consumed in the DP 8.1G A2 mode
PLN DP (5.4G)	N/A	N/A	mW	Power consumed in the DP 5.4G A2 mode
PLN DP (2.7G)	N/A	N/A	mW	Power consumed in the DP 2.7G A2 mode
PLN DP (1.62G)	N/A	N/A	mW	Power consumed in the DP 1.62G A2 mode
PLN eDP (8.1G)	N/A	N/A	mW	Power consumed in the eDP 8.1G A2 mode
PLN eDP (5.4G)	N/A	N/A	mW	Power consumed in the eDP 5.4G A2 mode
PLN eDP (4.32G)	N/A	N/A	mW	Power consumed in the eDP 4.32G A2 mode
PLN eDP (3.24G)	N/A	N/A	mW	Power consumed in the eDP 3.24G A2 mode
PLN eDP (2.7G)	N/A	N/A	mW	Power consumed in the eDP 2.7G A2 mode
PLN eDP (2.43G)	N/A	N/A	mW	Power consumed in the eDP 2.43G A2 mode
PLN eDP (2.16G)	N/A	N/A	mW	Power consumed in the eDP 2.16G A2 mode
PLN eDP (1.62G)	N/A	N/A	mW	Power consumed in the eDP 1.62G A2 mode
Note: Vtyp=0.80V/1.2V, Vmax = 0.88V/1.98V, Ttyp = 25C, Tmax = 125C, unless otherwise noted.				

Table 19: Lane A2 power Specification for 0.80V/1.2V Supplies

Name	Typical Currents (mA)					Maximum Currents (mA)					Units
	LANE		COMMON			LANE		COMMON			
	AVDD_D	AVDD_CLK	AVDD_H	AVDD_D	AVDD_CLK	AVDD_D	AVDD_CLK	AVDD_H	AVDD_D	AVDD_CLK	
PLN PCIe Gen 3	2.57	0.05	11.42	5.58	4.42	8.35	0.17	14.36	7.70	5.80	mA
PLN PCIe Gen 2	2.33	0.05	12.47	5.14	2.16	7.80	0.16	15.35	7.00	6.50	mA
PLN PCIe Gen 1	2.45	0.05	12.29	3.51	1.56	8.13	0.17	14.36	6.50	3.30	mA
PLN USB3.1 Gen 2	2.45	0.05	12.15	5.94	4.71	14.59	0.30	14.36	8.60	7.20	mA
PLN USB 3.1 Gen 1	2.45	0.05	13.85	5.70	2.40	14.59	0.30	15.35	7.00	6.50	mA
PLN USXGMII	N/A	N/A	N/A	N/A	N/A	N/A	N/A	N/A	N/A	N/A	mA
PLN XFI	N/A	N/A	N/A	N/A	N/A	N/A	N/A	N/A	N/A	N/A	mA
PLN XAUI	2.70	0.06	12.47	5.14	2.16	8.58	0.18	12.58	4.95	2.65	mA
PLN SGMII	N/A	N/A	N/A	N/A	N/A	N/A	N/A	N/A	N/A	N/A	mA
PLN SATA Gen 3	5.27	0.11	9.65	5.21	2.19	8.63	0.18	10.67	5.78	4.99	mA
PLN SATA Gen 2	5.15	0.11	9.19	4.84	2.00	8.63	0.18	9.83	4.66	4.02	mA
PLN SATA Gen 1	5.15	0.11	8.97	4.73	1.95	8.63	0.18	8.98	4.86	4.26	mA
PLN DP (8.1G)	N/A	N/A	N/A	N/A	N/A	N/A	N/A	N/A	N/A	N/A	mA
PLN DP (5.4G)	N/A	N/A	N/A	N/A	N/A	N/A	N/A	N/A	N/A	N/A	mA
PLN DP (2.7G)	N/A	N/A	N/A	N/A	N/A	N/A	N/A	N/A	N/A	N/A	mA
PLN DP (1.62G)	N/A	N/A	N/A	N/A	N/A	N/A	N/A	N/A	N/A	N/A	mA
PLN eDP (8.1G)	N/A	N/A	N/A	N/A	N/A	N/A	N/A	N/A	N/A	N/A	mA
PLN eDP (5.4G)	N/A	N/A	N/A	N/A	N/A	N/A	N/A	N/A	N/A	N/A	mA
PLN eDP (4.32G)	N/A	N/A	N/A	N/A	N/A	N/A	N/A	N/A	N/A	N/A	mA
PLN eDP (3.24G)	N/A	N/A	N/A	N/A	N/A	N/A	N/A	N/A	N/A	N/A	mA
PLN eDP (2.7G)	N/A	N/A	N/A	N/A	N/A	N/A	N/A	N/A	N/A	N/A	mA
PLN eDP (2.43G)	N/A	N/A	N/A	N/A	N/A	N/A	N/A	N/A	N/A	N/A	mA
PLN eDP (2.16G)	N/A	N/A	N/A	N/A	N/A	N/A	N/A	N/A	N/A	N/A	mA
PLN eDP (1.62G)	N/A	N/A	N/A	N/A	N/A	N/A	N/A	N/A	N/A	N/A	mA
Note: Vtyp=0.80V/1.2V, Vmax = 0.88V/1.98V, Ttyp = 25C, Tmax = 125C, unless otherwise noted.											

Table 20: CMN/Lane A2 Current on Various Supply Domains for 0.80V/1.2V Supplies

Name	Typ	Max	Units	Description
PLN A3	2.03	3.5	mW	Power consumed in A3 mode
PLN A4.1	0.02	0.63	mW	Power consumed in A4.1 mode
PLN A4.2	0.01	0.60	mW	Power consumed in A4.2 mode
Note: Vtyp=0.80V/1.2V, Vmax = 0.88V/1.98V, Ttyp = 25C, Tmax = 125C, unless otherwise noted.				

Table 21: Cmn+Lane (Total) Power Consumed in Low Power Modes

5.3 Performance

Name	Min	Typ	Max	Units	Description
V_{cmn_avdd}	0.76	0.8	0.88	V	Supply voltage at the PMA macro pads inside the package.
$V_{cmn_avdd_clk}$	0.76	0.8	0.88	V	Supply voltage at the PMA macro pads inside the package.
$V_{cmn_avdd_h}$	1.08	1.2	1.98	V	Supply voltage at the PMA macro pads inside the package.
V_{xcvr_avdd}	0.76	0.8	0.88	V	Supply voltage at the PMA macro pads inside the package.
$V_{xcvr_avdd_clk}$	0.76	0.8	0.88	V	Supply voltage at the PMA macro pads inside the package.
T_j	-40	25	125	^oC	Junction temperature.

Table 22: Operating conditions

5.3.1 Recommended Operating Conditions

- Operating temperature -40C to 125C

6 Testability

6.1 Analog Test Bus (ATB)

Numerous analog test points are available for measurement using an analog test bus (ATB).

The following features of this function are worth noting.

- Register programmable using the CDB bus.
- Selected ATB measurement point signals are brought to pins, for direct measurement.
- Selected ATB measurement point can be measured using an on board 8 bit digitizer.

6.2 Loopback Modes

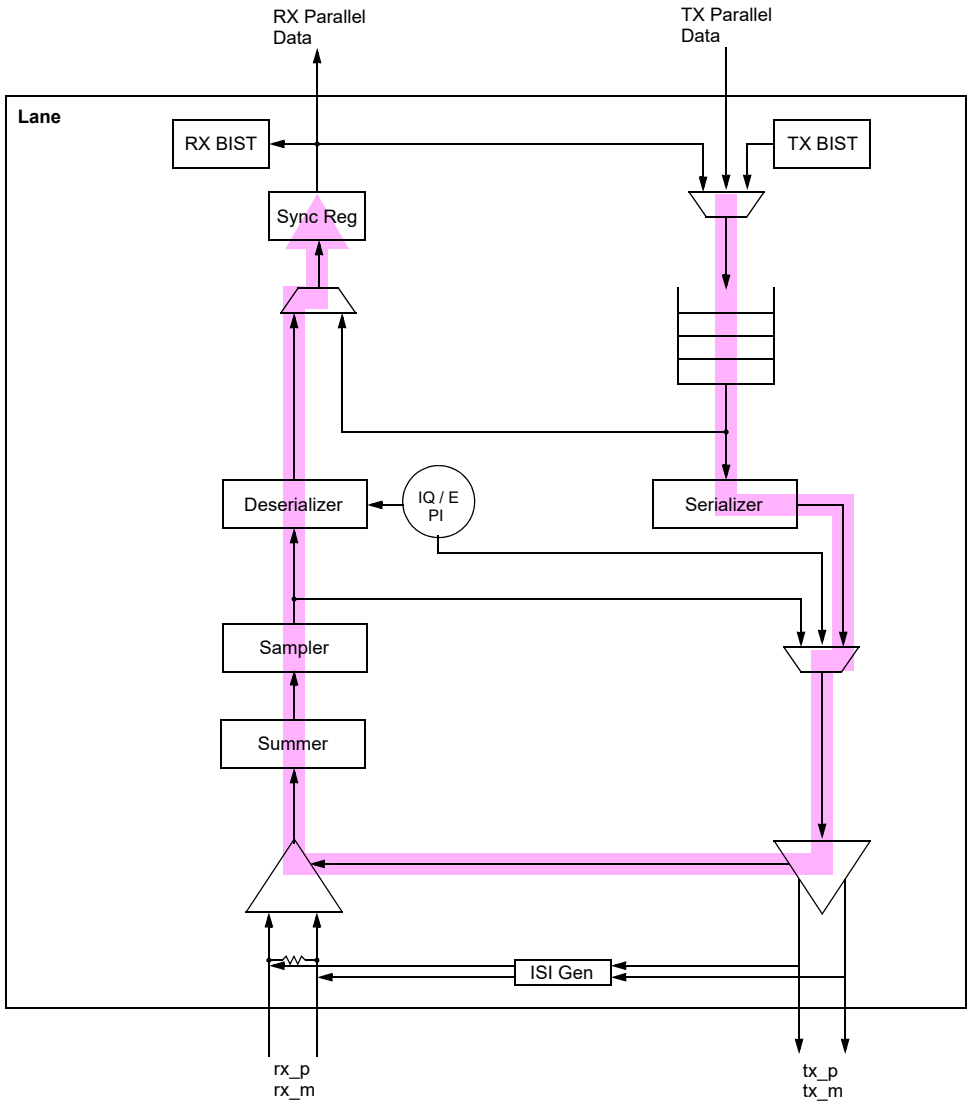

Figure 7: Serial loopback

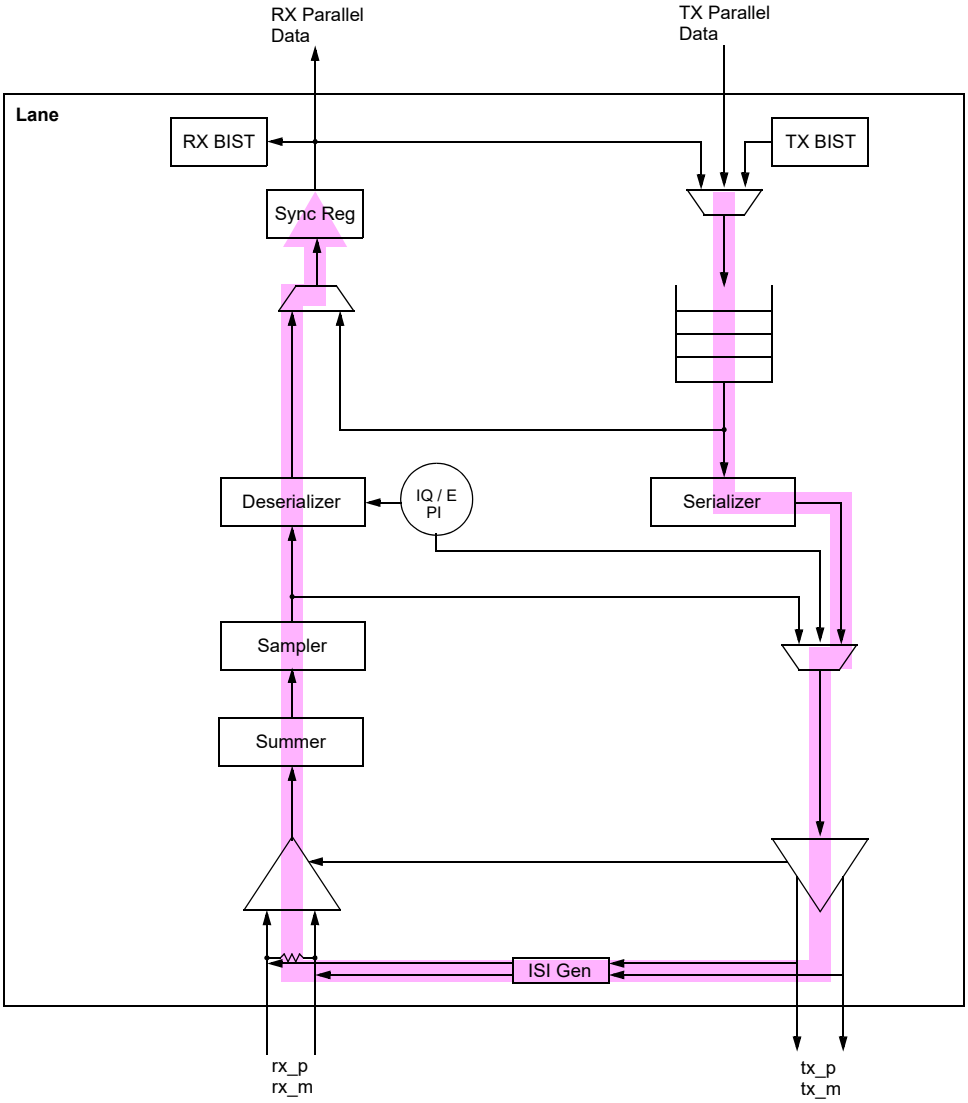

Figure 8: ISI generation loopback

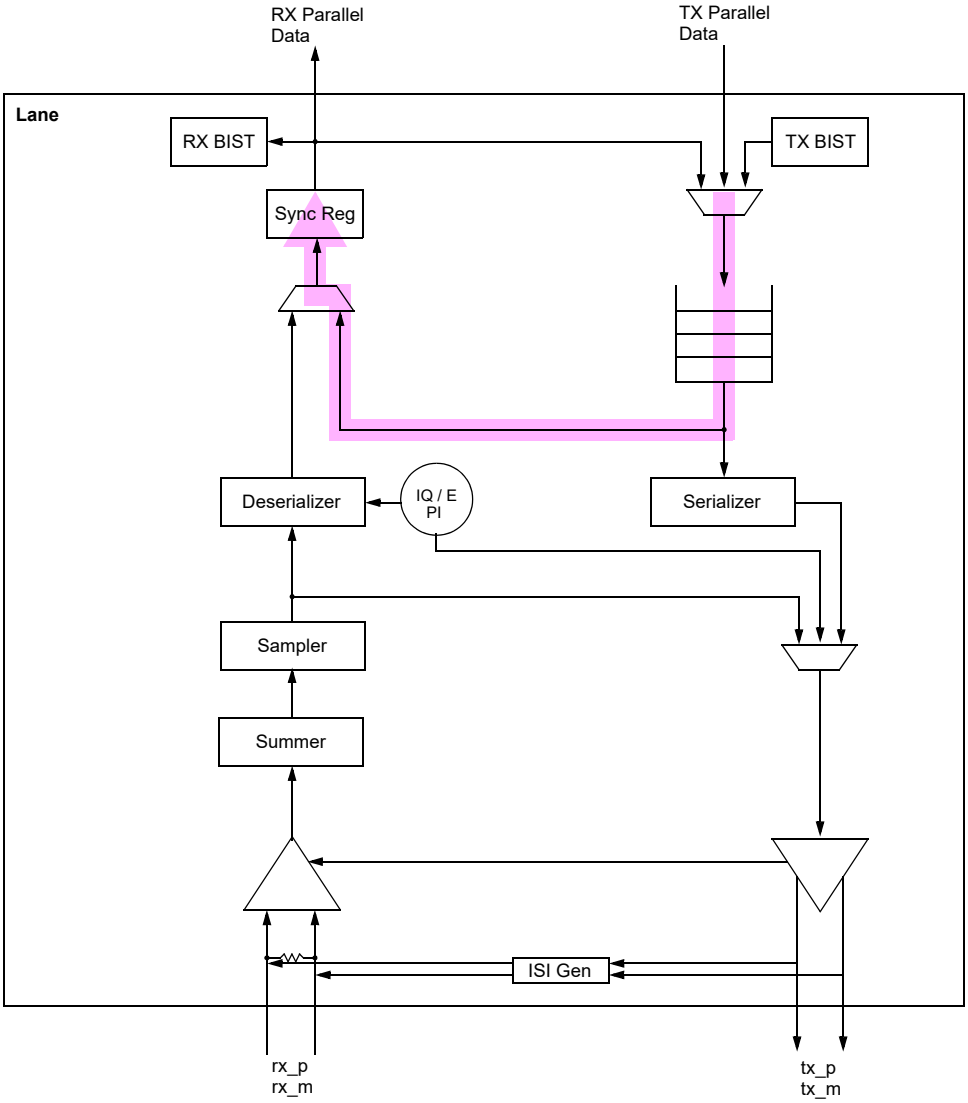

Figure 9: Near end parallel loopback

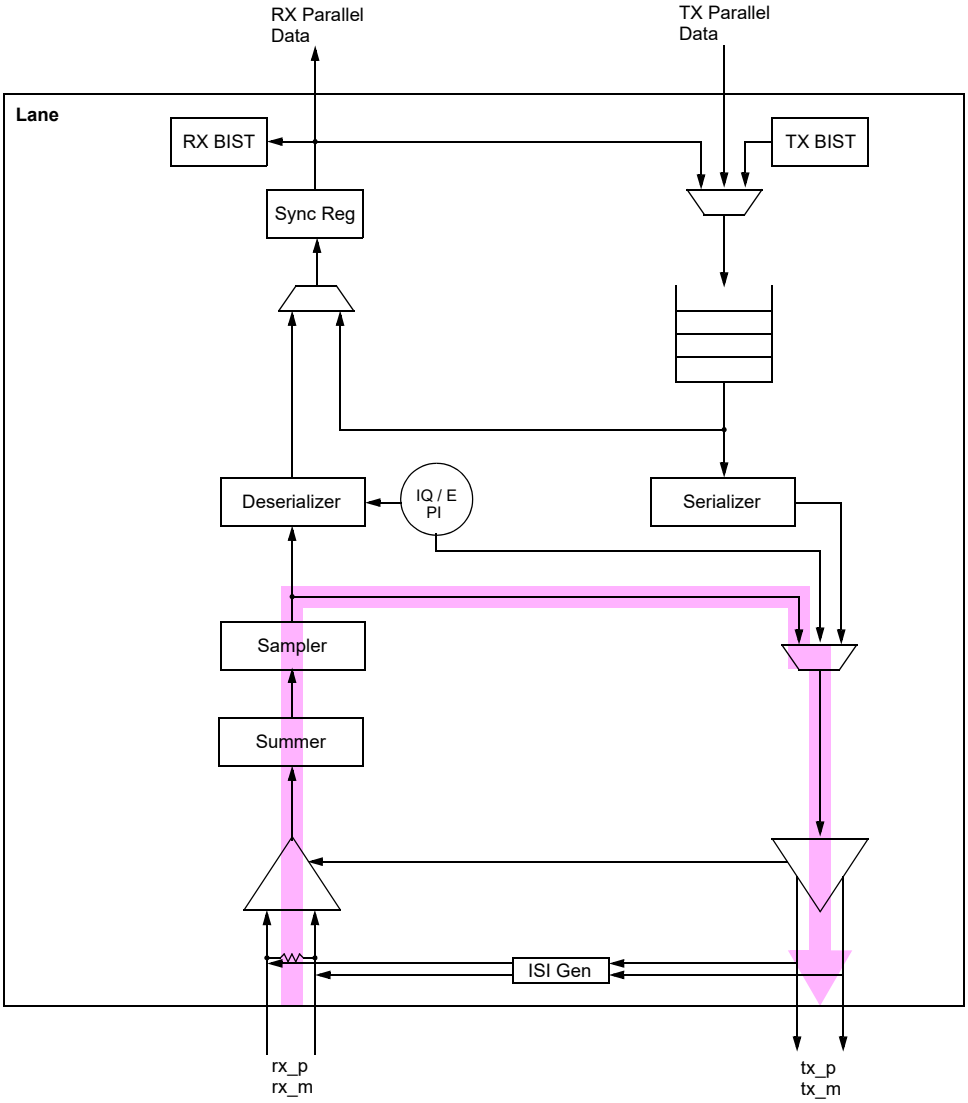

Figure 10: Line side loopback

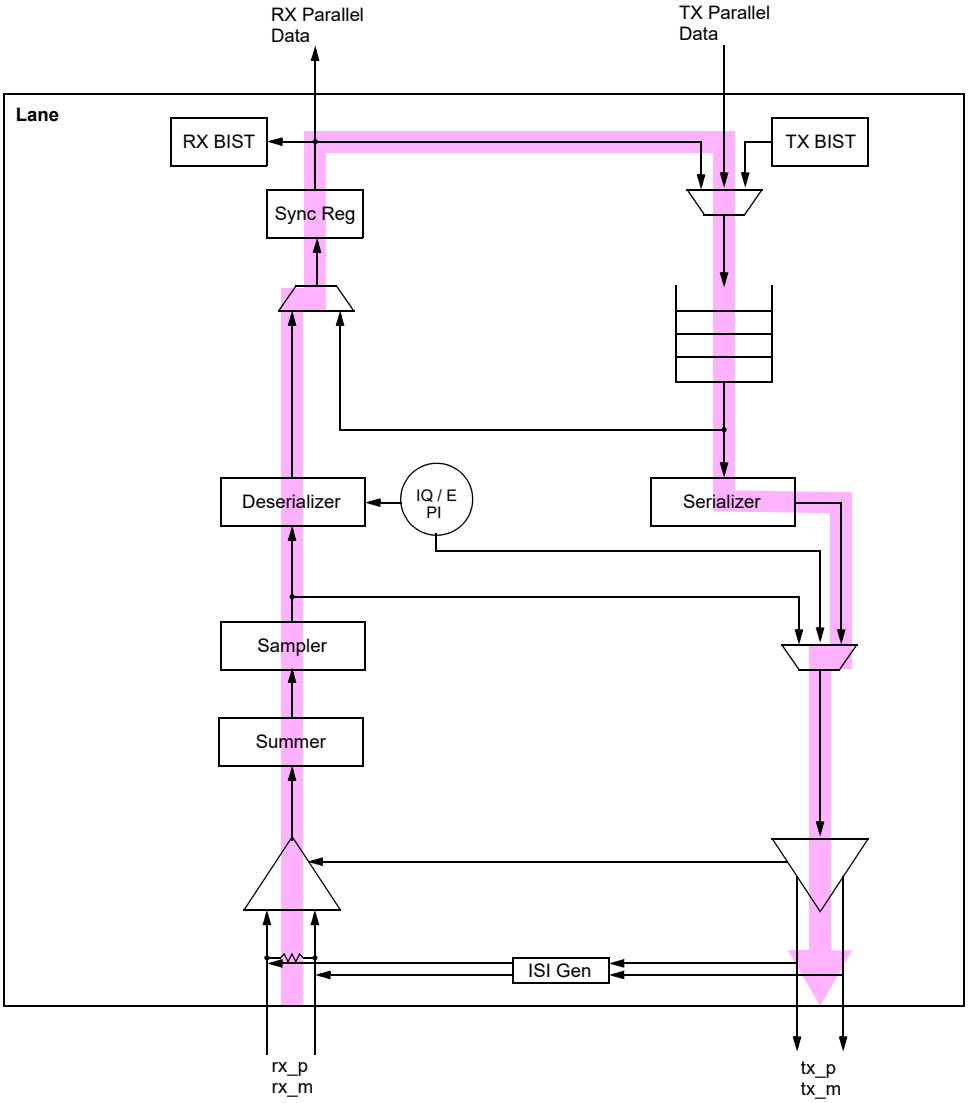

Figure 11: Far end parallel loopback

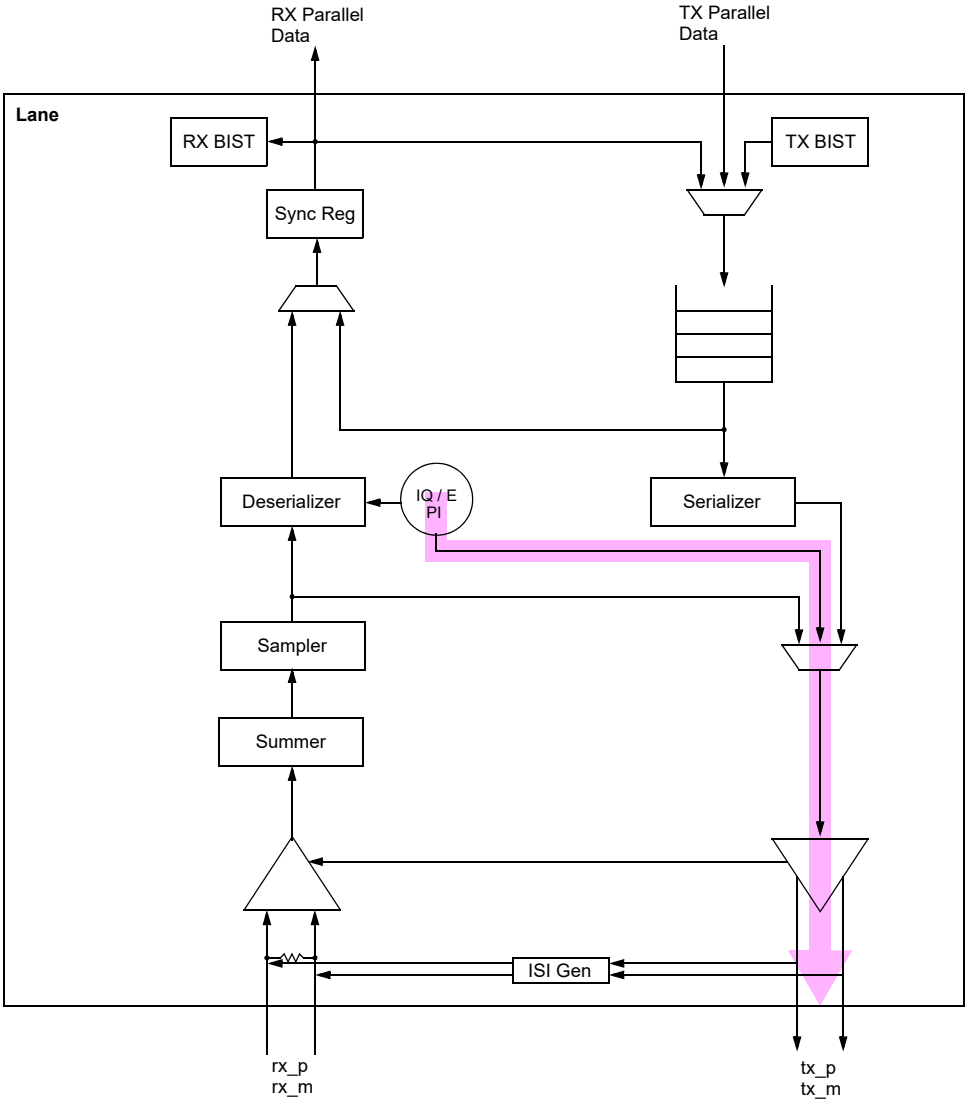

Figure 12: Recovered clock loopback

6.3 Digital Test Bus

Selected PHY internal signals are driven out on a digital test bus, for diagnostic and debug purposes.

6.4 Configuration and Status Registers

Numerous registers are accessible using the CDB bus for configuration and diagnostic purposes. Configuration registers include functions such as programming the PMA for different reference clock rates, programming the PMA for non-default protocol operation, as well as analog tuning functions. Diagnostic registers include functions such as accessing and overriding automatic calibration functions, analog diagnostic feature control, BIST control, and receiver eye measurement.

6.5 PMA Receive Data Eye Measurement

The receive data eye measurement function allows the incoming data eye to be evaluated after receiver equalization has been applied. A block diagram of this function is illustrated in figure 13. The eye measurement function is implemented such that a test sample point is specified relative to the functional center sample point. The data associated with the test sample point is compared with the data of the functional center sample point for a programmed number of receiver clock cycles. After the programmed number of clock cycles have completed, the number of bit errors between the test sample point data and the functional center sample point is reported. To measure the details of an entire receiver data eye, multiple test points can be run and the reported bit error count for each test point can be evaluated. The following additional features are worth noting.

- Register programmable using the CDB bus.
- The phase of the test sample point can be set to one of 32 steps in each direction away from the functional center sample point.
- The amplitude of the test sample point can be set to one of 128 steps in each direction away from the functional center sample point.
- The number of receiver clock cycles for testing is programmable to a maximum of 2^{32} receiver clocks.
- The bit error count for testing is a maximum of 2^{16}.

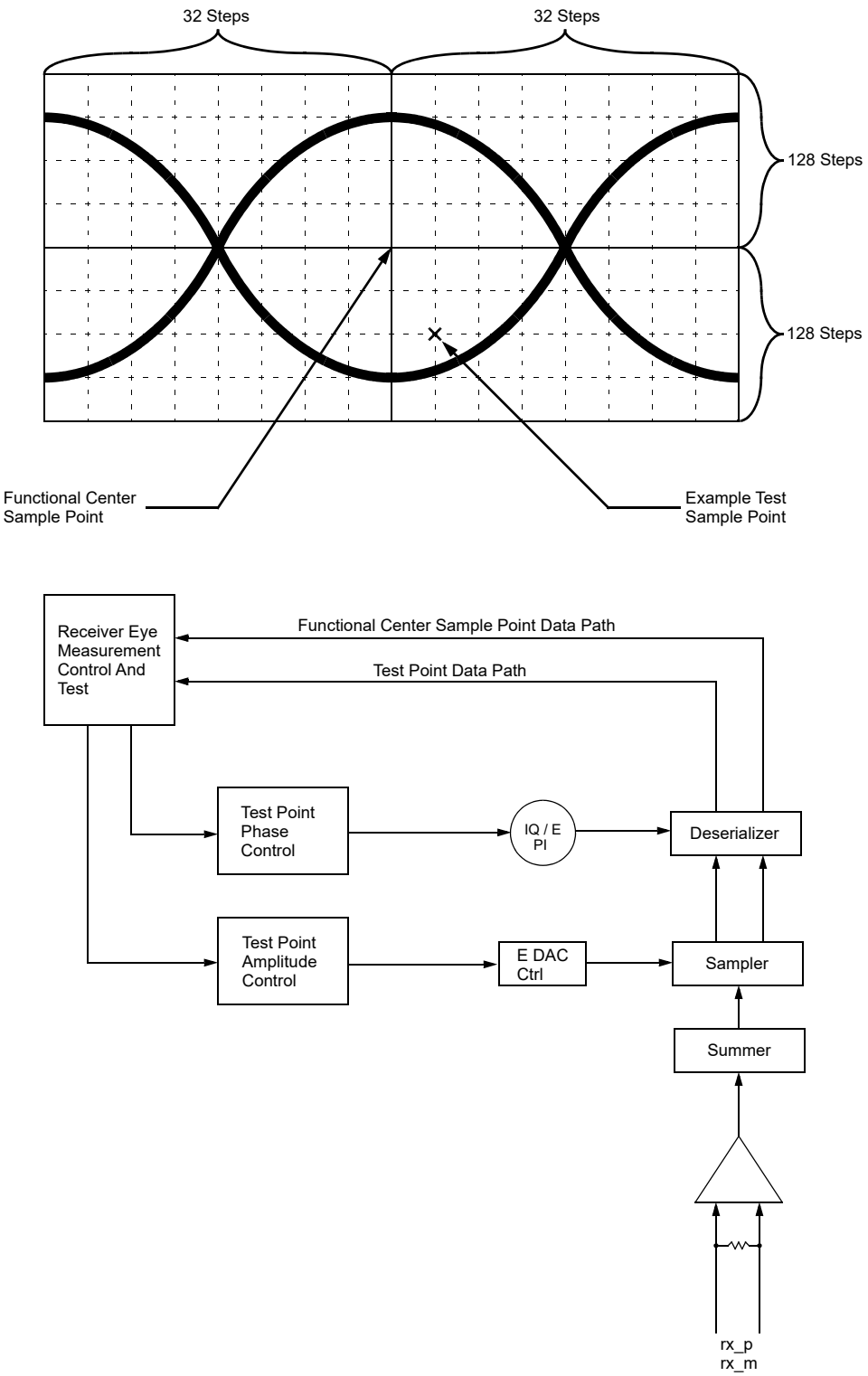

Figure 13: Receiver data eye measurement function block diagram

6.6 PMA BIST Pattern Generator And Checker

The PMA BIST pattern function includes a pattern generator in the transmitter data path and a pattern checker in the receiver data path. The following features of this function are worth noting.

- Register programmable using the CDB bus.
- Automatic generation and checking of PRBS 7, 15, 23 and 31 patterns, with a programmable seed.
- Generation and checking of a programmable user defined data pattern of size 1 to 18 words deep.
- Option to force bit errors in the generated data.
- Maximum word error count of 2^{16}.
- Capability of synchronizing the enable of the TX generation function across multiple lanes, to measure lane to lane skew.
- Checker status pin, indicating when at least one error has been detected
- Error toggle pin, that changes state each clock cycle that an error is detected.

7 Reliability

7.1 Lifetime

- Mission profile MTBF reliability of 10 years lifetime at 110C and Vdd + 10%

7.2 ESD

Supply Domain	Min	Typ	Max	Units	Description
HBM	2.0			kV	Human Body Model Target
CDM	6.0			A	Charged-Device Model Target

Table 23: ESD Protection Targets

7.3 HTOL

HTOL testing procedure designed to follow JESD22-A108D.

7.4 EM/IR Constraints

- Layout designed for EM current densities at 110C.

8 Process Information

8.1 Process Flavor

- TSMC 12FFC technology

8.2 Components Used

- RVT, LVT, and SLVT devices

8.3 Metal Stack

- 2Xa1Xd_h_3Xe_vhv_2z_UT-APRDL
- 2Xa1Xd_h_4Xe_vhvh_2r_UT-APRDL
- 2Xa1Xd_h_3Xe_vhv_2y2r_UT-APRDL

8.4 Bump Pitch

- 162 um bump pitch

8.5 Poly Orientation

- North/South poly orientation

8.6 Third Party Licensing Requirement / Restriction

- tcbn12ffcllbwp12p90 Ver. 090a
- tcbn12ffcllbwp12p90lvt Ver. 090a
- tcbn12ffcllbwp12p90pm Ver. 090a
- tcbn12ffcllbwp12p90lvl Ver. 090a
- Technology digital standard cell base and power management libraries; specific libraries and versions TBD

9 Deliverables

PHY and PCS	PMA

Documentation
• PHY specification
• PCS specification
• Programmer's guide
• Integration guide
 	
RTL
 	
Trial synthesis
• SDC constraints
• RTL Compiler synthesis script
• LEC script
• Synthesis reports (area, power, etc.)
 	
APB Register list in IPXact format
 	
Verification
• Testbench RTL
• Directed tests
 	
HVM Kit
 	
IBIS-AMI Kit
	Documentation
	• PMA Specification
	
	Verification
	• RTL
	• Netlist
	• Analog high-level behavioral models
	• SDF
	
	CDL netlists for LVS
	
	DFT
	• ATPG setup
	  • Scan abstracts/CTL
	  • Ignore lists
	  • Pin assignments
	  • JTAG BSDL
	
	GDS (physical macro)
	
	LEF (floorplanning abstract)
	
	LIB (timing model)
	
	Physical verification reports
	• Antenna checks
	• DRC

Table 24: Deliverables

Index

A

Analog Test Bus 39
APB clock 22
APB clock input 22
APB interface 14
APB Top Wrapper 15
Area Target 24
Automotive safety 9

B

Block Descriptions 14, 19
book organization 7
Bump Pitch 50

C

Clock/Reset controller 15
Clocks 22
Clocks and Reset 22
Common 19
Components Used 50
Configuration and Status Registers 46
Configuration Options 21

D

Data Path Clocks 23
Data path clocks 23
Deliverables 51
Design verification 9
Digital Test Bus 46

E

Ease of integration 9
EM/IR Constraints 49
ESD 49
ESD Protection Targets 49

F

Far end parallel loopback 44

H

HTOL 49

I

Interfaces 14
ISI generation loopback 41

L

Lanes
- Receiver Path 20
- Shared Across TX and RX Paths 19
- Transmitter Path 19

Lifetime 49
Line side loopback 43
Loopback Modes 40
Low-risk solution 9

M

Metal Stack 50
Multi-protocol PCS 14
Multi-Protocol Support 16

N

Near end parallel loopback 42
Number of lanes 21

O

operating conditions 38

P

Performance 38
PHY and PMA Isolation and Control 15
PHY auto-configuration/speedup 15
PHY Level Block Diagram 13
PHY Power Controller 15
PHY reference clock inputs 22
PHY-Level Architecture 13
PIPE and Raw SerDes interfaces 14
PMA BIST Pattern Generator And Checker 48
PMA Level Block Diagram 18
PMA Receive Data Eye Measurement 46
PMA-Level Architecture 17
Poly Orientation 50
Power Targets 26
Primary Interfaces 11
Process Flavor 50
Product Highlights 10

R

Receiver data eye measurement function block diagram 47
Recommended Operating Conditions 38
Recovered clock loopback 45
Reference Clock input 22
Reliability 49
Reset Signals 23
Resets 23

S

SerDes design history 9
Serial loopback 40
Soft IP 21
Supported PHY configurations 16
Supported PIPE PCS configuration options 21

T

TAP and External Boundary Scan interfaces 14

TAP clock 22
TAP clock input 22
Testability 39
Testability and Debug Features 12
Third Party Licensing 50

V

Versatile features 9