MT7986 Implicit Beam Forming Calibration Flow With API Flow

Version: 1.0

Release date: 2021-10-06

MediaTek Confidential
For jiangdingyong@twsz.com Use Only

Use of this document and any information contained therein is subject to the terms and conditions set forth in Exhibit 1. This document is subject to change without notice.

MediaTek Proprietary and Confidential. © 2021 MediaTek Inc. All rights reserved.
Unauthorized reproduction or disclosure of this document, in whole or in part, is strictly prohibited.

Version History

Version	Date	Author	Description
1.0	2021-10-06	Hauze Yu	Initial draft

MediaTek Confidential
For jiangdingyong@twsz.com Use Only

© 2021 MediaTek Inc. All rights reserved.
Unauthorized reproduction or disclosure of this document, in whole or in part, is strictly prohibited.

Table of Contents

Version History **2**
Table of Contents **3**
List of Figures **4**
List of Tables **4**
1 Function Description **5**
2 Calibration Environment **6**
2.1 4x4 Test Environment 6
2.2 DBDC Test Environment - Golden 6
2.3 DBDC Test Environment - Instrument 7
3 Enable iBF Setting in Web UI **8**
4 Command Introduction **10**
4.1 DUT Command for Calibration with Golden Unit 10
4.1.1 iwpriv ra0 set ATETxBfInit=xx 10
4.1.2 iwpriv ra0 set ATETxBfGdInit=xx 10
4.1.3 iwpriv ra0 set ATECHANNEL=xx:yy 10
4.1.4 iwpriv ra0 set ATETxBfChanProfileUpdate= kk:xx:gg:H11:H11_Ang:H21:H21_Ang:H31:H31_Ang:H41:H41_Ang 10
4.1.5 iwpriv ra0 set TxBfProfileData20MAllWrite=aa:bb (Trigger or End) 12
4.1.6 iwpriv ra0 set TxBfProfileData20MAllWrite=aa:bb:cc: …. :aa':bb':cc':dd':ee': ….:aa":bb":cc":dd":ee" (Feed profile) 12
4.1.7 iwpriv ra0 set ATEIBfGdCal=xx:yy:zz:kk 13
4.1.8 iwpriv ra0 set ATEIBfGdVerify=xx:yy:zz:kk:gg:ll 13
4.1.9 iwpriv ra0 set ATEIBfPhaseE2pUpdate=aa:bb:cc 14
4.1.10 iwpriv ra0 set ATE=ATESTOP 14
4.1.11 iwpriv ra0 set ATE=TXREVERT 14
4.2 DUT Command for Calibration with Instrument - QA 15
4.2.1 Calibration 15
4.2.2 Verification 17
4.3 DUT Command for Calibration with Instrument - Iwpriv 19
4.3.1 Calibration 19
4.3.2 Verification 21
4.4 DUT Command for Calibration with Golden 23
4.4.1 2G Band with Golden 23
4.4.2 5G Band with Golden 24
5 iBF Calibration Data Layout in EEPROM **26**
6 Debug SOP of iBF Calibration with Golden **28**
Exhibit 1 Terms and Conditions **30**

MediaTek Confidential
For jiangdingyong@twsz.com Use Only

© 2021 MediaTek Inc. All rights reserved.
Unauthorized reproduction or disclosure of this document, in whole or in part, is strictly prohibited.

List of Figures

Figure 1-1. Centered, bold and italicized 6

List of Tables

No table of figures entries found.

MediaTek Confidential
For jiangdingyong@ twsz.com Use Only

© 2021 MediaTek Inc. All rights reserved.
Unauthorized reproduction or disclosure of this document, in whole or in part, is strictly prohibited.

1 Function Description

This document will introduce the interface and functionality of every CMDs which will be used to do the iBF phase calibration. There are two kinds of iBF phase calibration method. One is the calibration by means of golden unit and the other is by means of instrument. This document will also introduce every step which uses what kinds of CMDs.

MediaTek Confidential
For jiangdingyong@ twsz.com Use Only

© 2021 MediaTek Inc. All rights reserved.
Unauthorized reproduction or disclosure of this document, in whole or in part, is strictly prohibited.

2 Calibration Environment

2.1 4x4 Test Environment

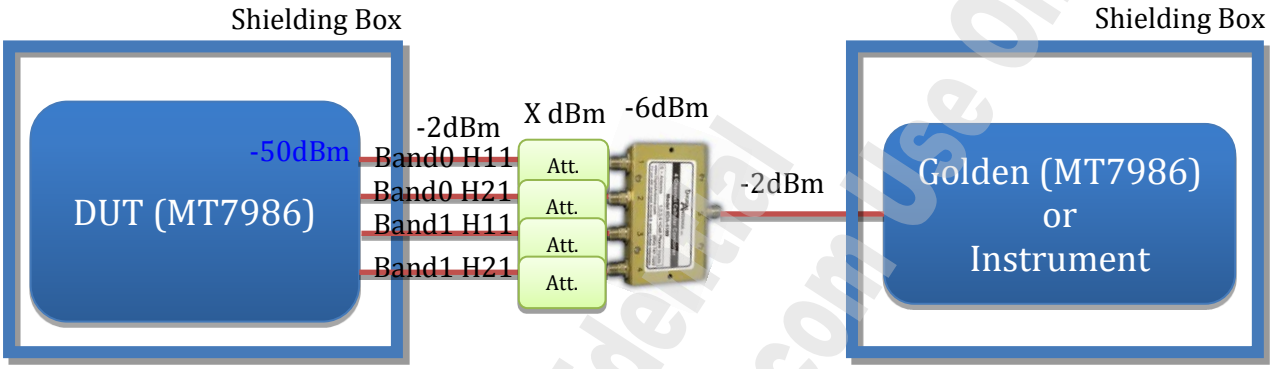

Figure 2-1. IBf Phase Calibration Test Environment Layout

Note:

1. RX Target power: -50dBm with 3dB variation both for MT7986
2. iBF DUT and Golden **MUST** be done within separated shielding boxes.
3. Assume that:
   - MT7986 Tx power is 13dBm (example)
   - All of cable loss is 3dB
   - Combiner loss is 6dB
   - Attenuator loss X is 10dB if golden is instrument; 45dB if golden is MT7986
   - Golden's TX power = 5dBm
   - Instrument's Tx power = -30dBm

2.2 DBDC Test Environment - Golden

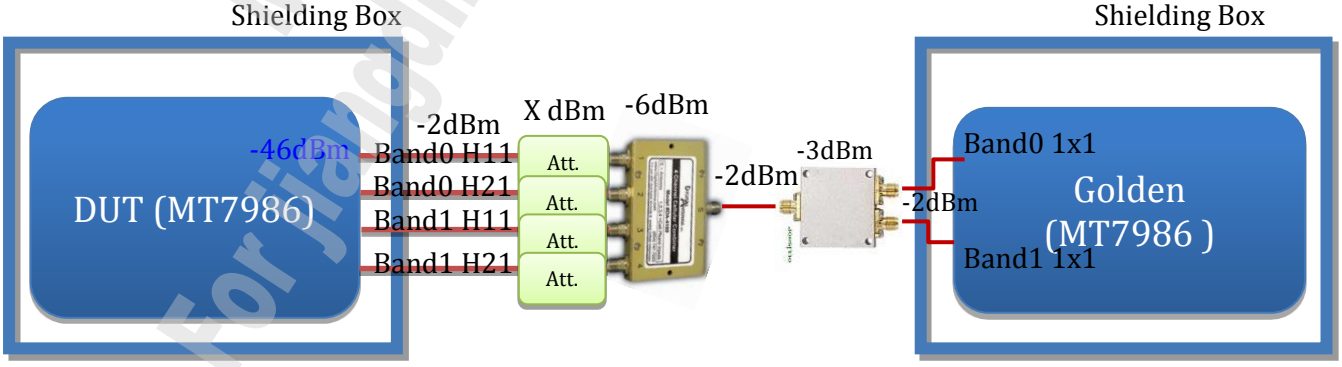

Figure 2-2. IBf Phase Golden Calibration Test Environment Layout

Note:

1. RX Target power: -46dBm with 3dB variation both for MT7986
2. iBF DUT and Golden **MUST** be done within separated shielding boxes.

MediaTek Confidential
For JiangJinyong@ cvsz.com Use Only

© 2021 MediaTek Inc. All rights reserved.
Unauthorized reproduction or disclosure of this document, in whole or in part, is strictly prohibited.

3. Assume that:
   - MT7986 Tx power is 20dBm (example)
   - All of cable loss is 6dB
   - All of combiner loss is 9dB
   - Attenuator loss X is 51dB
   - Golden's Tx power is 20dBm

2.3 DBDC Test Environment - Instrument

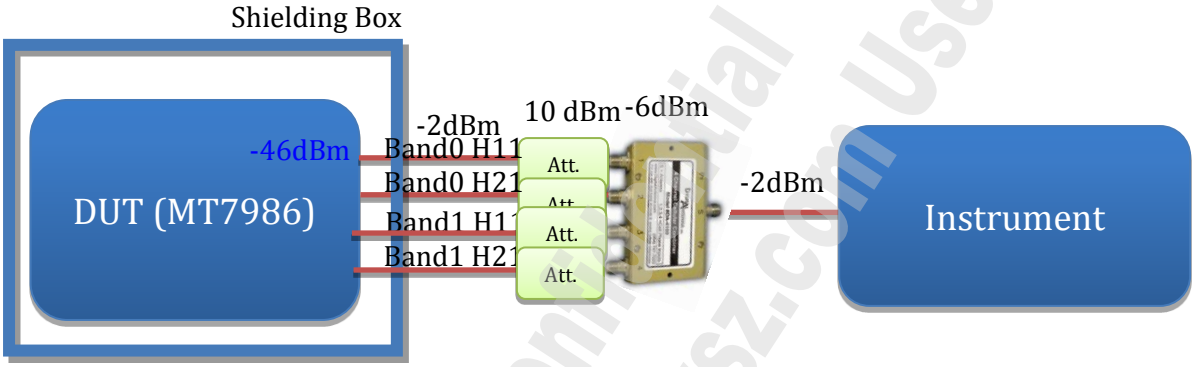

Figure 2-3. IBf Phase Instrument Calibration Test Environment Layout

Note:

1. RX Target power: -46dBm with 3dB variation for MT7986
2. iBF DUT and Golden **MUST** be done within separated shielding boxes.
3. Assume that:
   - MT7986 Tx power is 13dBm (example)
   - All of cable loss is 4dB
   - Combiner loss is 6dB
   - Attenuator loss is 10dB
   - Instrument's Tx power = -26dBm

MediaTek Confidential
For jiangdingyong@ tfvsz.com Use Only

© 2021 MediaTek Inc. All rights reserved.
Unauthorized reproduction or disclosure of this document, in whole or in part, is strictly prohibited.

3 Enable iBF Setting in Web UI

1. Wifi Configuration Page

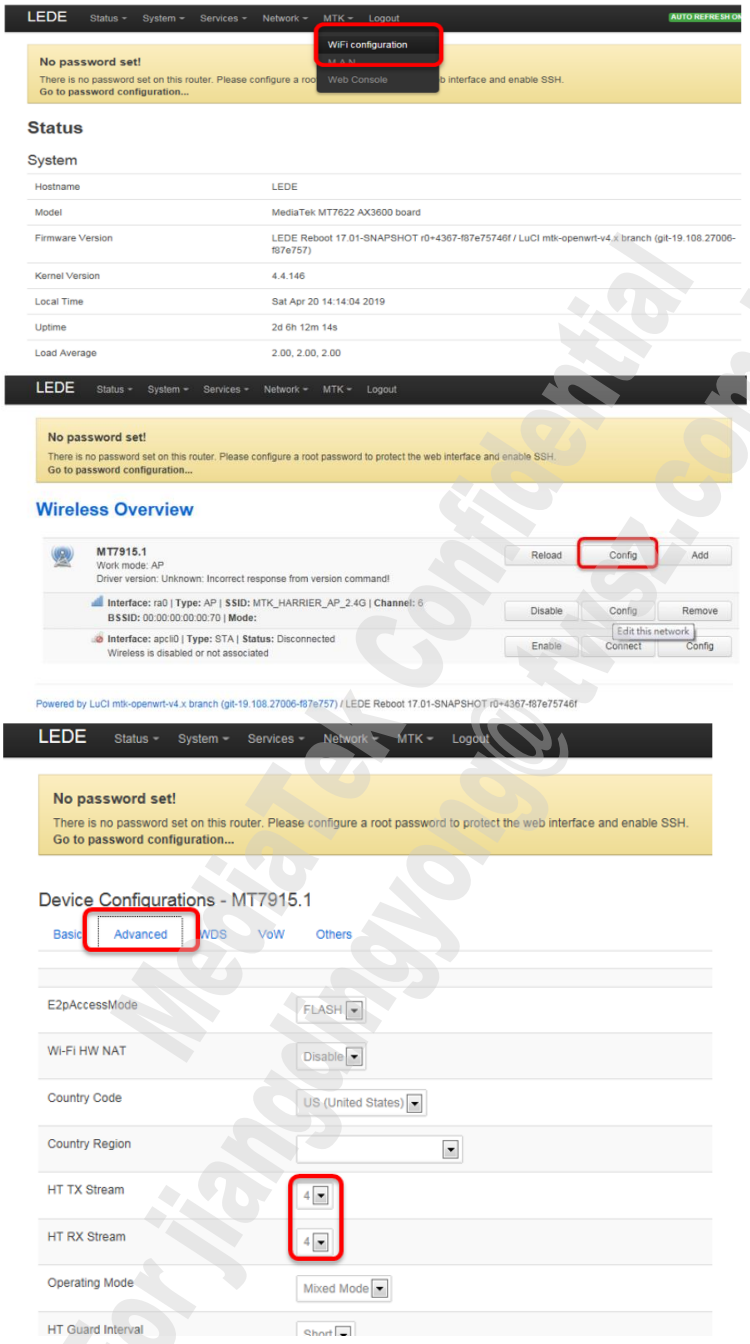

- Notes: Please make sure HT T/RxStream=4 at MT7986 DUT side and HT T/RStream=1 at MT7986 DUT side

MediaTek Confidential
For jiangdingyong@tcl.com Use Only

© 2021 MediaTek Inc. All rights reserved.
Unauthorized reproduction or disclosure of this document, in whole or in part, is strictly prohibited.

2. At the same page, please select “Other” at menu bar

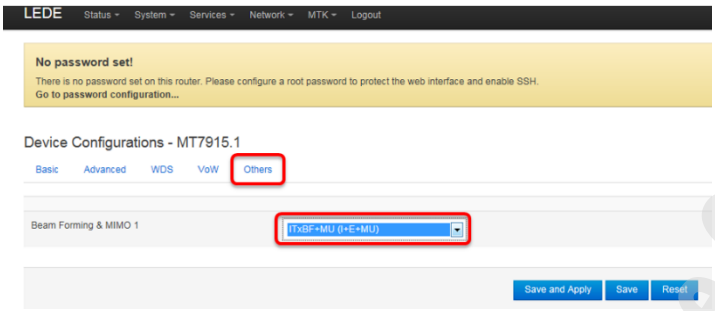

- Note: Please make sure both of ITxBF and ETxBF are enabled

MediaTek Confidential
For jiangdingyong@twsz.com Use Only

© 2021 MediaTek Inc. All rights reserved.
Unauthorized reproduction or disclosure of this document, in whole or in part, is strictly prohibited.

4 Command Introduction

4.1 DUT Command for Calibration with Golden Unit

4.1.1 iwpriv ra0 set ATETxBfInit=xx

This CMD will be used to initialize all of DUT's setting.

1. Enable ATE
2. MAC address configuration
3. Phy mode setting
4. MCS rate setting
5. Bandwidth
6. GI
7. Tx path configuration

Input Argument	Parameter description	• Value
xx	80M or less = 0; DBDC = 1	0

4.1.2 iwpriv ra0 set ATETxBfGdInit=xx

This CMD will configure the setting in golden side. It will do

1. Enable ATE
2. Set MAC address
3. Set phy mode
4. Set bandwidth
5. Set Tx/Rx path
6. Set Tx power
7. Set continuous Rxa

Input Argument	Parameter description	Value
xx	80M or less = 0; DBDC 2G/5G=0/1	0

4.1.3 iwpriv ra0 set ATECHANNEL=xx:yy

This CMD will be used to set the channel

Input Argument	Parameter description	Value
xx	Channel index	1 ~ 196
yy	11J (Group1's defined CHIDs are belong to 11J)	0 : not 11J; 1 : 11J

4.1.4 iwpriv ra0 set ATETxBfChanProfileUpdate= kk:xx:gg:H11:H11_Ang:H21:H21_Ang:H31:H31_Ang:H41:H41_Ang

This CMD can trigger DUT to update channel profile

Input Argument	Parameter description	Value
kk (8bit)	Pfmu ID	0 ~ 63

MediaTek Confidential
For jiangdingyong@twsz.com Use Only

© 2021 MediaTek Inc. All rights reserved.
Unauthorized reproduction or disclosure of this document, in whole or in part, is strictly prohibited.

Input Argument	Parameter description	Value
xx (8bit)	Subcarrier index	0 ~ 31 for positive 63 ~ 32 for negative (-1 ~ -32)
gg	When you finish update, this value should be 01, otherwise it should be 00	0: Not done 1: Done
H11 (12bit)	Amplitude of H11 (0 ~ 1)	S0.9 (10bits)
H11_Ang (12bit)	Angle of H11 (-pi ~ pi mapping to -0.5 ~ 0.5)	S-1.9
H21 (12bit)	Amplitude of H21 (0 ~ 1)	S0.9
H21_Ang (12bit)	Angle of H21 (-pi ~ pi mapping to -0.5 ~ 0.5)	S-1.9
H31 (12bit)	Amplitude of H31 (0 ~ 1)	S0.9
H31_Ang (12bit)	Angle of H31 (-pi ~ pi mapping to -0.5 ~ 0.5)	S-1.9
H41(12bit)	Amplitude of H41 (0 ~ 1)	S0.9
H41_Ang(12bit)	Angle of H41 (-pi ~ pi mapping to -0.5 ~ 0.5)	S-1.9

	$\lvert H_{11}\rvert$	□ H_{11}	$\lvert H_{21}\rvert$	□ H_{21}	$\lvert H_{31}\rvert$	□ H_{31}	$\lvert H_{41}\rvert$	□ H_{41}
Sc_-32	xx	xx	xx	xx	xx	xx	xx	xx
Sc_-31	xx	xx	xx	xx	xx	xx	xx	xx
⋮								
Sc_-1	xx	xx	xx	xx	xx	xx	xx	xx
Sc_0	xx	xx	xx	xx	xx	xx	xx	xx
Sc_1	xx	xx	xx	xx	xx	xx	xx	xx
⋮								
Sc_31	xx	xx	xx	xx	xx	xx	xx	xx

- Amplitude format is defined by instrument vendor
- Angle is normalized to -0.5 ~0.5. FXP format is S-1.9

How to normalize estimated channel's amplitude and phase?

➔ Hmax = Max (H'11, H'21, H'31, H'41)
H11 = H'11/Hmax, H21 = H'21/Hmax, H31 = H'31/Hmax, H41 = H'41/Hmax

➔ ∠H11 = ∠H'11/PI and etc. –PI <= ∠H'11 <= PI

➔ Divided by 2PI

Format translation S(0,9):

Amplitude is normalized to 0 <= H < 1. FXP format is S0.9

Mapping 方式如下: [input=x; output=y]

Y = round(x*512)

Note: 12bits is CMD input format, therefore need to do sign extension from 10~12 bits

Format translation S(-1,9):

Mapping 方式如下: [input=x; output=y]

MediaTek Confidential
For jiangdingyong@twsz.com Use Only

© 2021 MediaTek Inc. All rights reserved.
Unauthorized reproduction or disclosure of this document, in whole or in part, is strictly prohibited.

```
If x<0
      Y= round((x+2)*512)
Else
      Y = round(x*512)
End
```

Eg. 1. Input = 0.3 => output = 154(DEC) or 9A (HEX)
2. Input = -0.3 => output = 870(DEC) or 366(HEX)

4.1.5 iwpriv ra0 set TxBfProfileData20MAllWrite=aa:bb (Trigger or End)

Input Argument	Parameter description	Value
aa (8bit)	Pfmu ID	0 ~ 63
bb (8bit)	Profile update trigger	0xF0 (Start to trigger update) 0xFF (Stop to update)

4.1.6 iwpriv ra0 set TxBfProfileData20MAllWrite=aa:bb:cc: …. :aa':bb':cc':dd':ee': ….:aa":bb":cc":dd":ee" (Feed profile)

Input Argument	Parameter description	Value
aa (8bit)	Subcarrier ID	Group * 8, Group=0~7
bb (16bit)	Angle of H11	(-pi ~ pi mapping to -0.5 ~ 0.5), S-1.9, bit15~10 sign extension
cc (16bit)	Angle of H21	(-pi ~ pi mapping to -0.5 ~ 0.5), S-1.9, bit15~10 sign extension
dd (16bit)	Angle of H31	(-pi ~ pi mapping to -0.5 ~ 0.5), S-1.9, bit15~10 sign extension
ee (16bit)	Angle of H41	(-pi ~ pi mapping to -0.5 ~ 0.5), S-1.9, bit15~10 sign extension
aa' (8bit)	Subcarrier ID	Group * 8 + 1
bb' (16bit)	Angle of H11	(-pi ~ pi mapping to -0.5 ~ 0.5), S-1.9, bit15~10 sign extension
cc' (16bit)	Angle of H21	(-pi ~ pi mapping to -0.5 ~ 0.5), S-1.9, bit15~10 sign extension
dd' (16bit)	Angle of H31	(-pi ~ pi mapping to -0.5 ~ 0.5), S-1.9, bit15~10 sign extension

MediaTek Confidential
For jingdingyong@ twsz.com use Only

© 2021 MediaTek Inc. All rights reserved.
Unauthorized reproduction or disclosure of this document, in whole or in part, is strictly prohibited.

Input Argument	Parameter description	Value
ee' (16bit)	Angle of H41	(-pi ~ pi mapping to -0.5 ~ 0.5), S-1.9, bit15~10 sign extension
……. Repeat		
aa'' (8bit)	Subcarrier ID	Group * 8 + 7
bb'' (16bit)	Angle of H11	(-pi ~ pi mapping to -0.5 ~ 0.5), S-1.9, bit15~10 sign extension
cc'' (16bit)	Angle of H21	(-pi ~ pi mapping to -0.5 ~ 0.5), S-1.9, bit15~10 sign extension
dd'' (16bit)	Angle of H31	(-pi ~ pi mapping to -0.5 ~ 0.5), S-1.9, bit15~10 sign extension
ee'' (16bit)	Angle of H41	(-pi ~ pi mapping to -0.5 ~ 0.5), S-1.9, bit15~10 sign extension

4.1.7 iwpriv ra0 set ATEIBfGdCal=xx:yy:zz:kk

DUT is calibrated with golden UT and CMD will do

1. Set the sounding type (Only NDPA)
2. Set the sounding packet's MCS rate
3. Send sounding packet
4. Calculate the phase difference between i/e BF profiles

Input Argument	Parameter description	Value
xx	Group index	0~8
yy	L/M/H channel in group	1
zz	Band index	0 for 2.4G band0, 1 for 5G band1
kk	Phase calibration type	0: Do nothing 1: Calibration 2: Verification 3: Calibration with instrument

4.1.8 iwpriv ra0 set ATEIBfGdVerify=xx:yy:zz:kk:gg:ll

This CMD will verify the accuracy of calibrated phase. It will do

1. Set the sounding type (Only NDPA)
2. Set the sounding packet's MCS rate
3. Enable Tx/Rx phase compensation
4. Send sounding packet
5. Calculate the phase difference between i/e BF profiles

MediaTek Confidential
For jiangdingyong@twsz.com Use Only

© 2021 MediaTek Inc. All rights reserved.
Unauthorized reproduction or disclosure of this document, in whole or in part, is strictly prohibited.

6. Report pass/fail status

Input Argument	Parameter description	Value
xx	Group index	0~8
yy	L/M/H channel in group	1
zz	Band index	0 for 2.4G band0, 1 for 5G band1
kk	Phase calibration type	0: Do nothing 1: Calibration 2. Verification
gg	LNA gain level	0: Low gain 1: Middle gain 2. High gain
ll	Calibrated phase is coming from buf or EEPROM	0: Buf 1: EEPROM

4.1.9 iwpriv ra0 set ATEIBfPhaseE2pUpdate=aa:bb:cc

This CMD will write calibrated phase into EEPROM

Input Argument	Parameter description	Value
aa	Group index	0~8
bb	00 : Update all, 01 : Update BW160, 10 : Update 2G only, 20 : Update 5G only	00,01,10,20
cc	Update types	0: just one group 1: update all of groups 2. Erase memory for all of groups 3.Read calibrated phases from E2P

4.1.10 iwpriv ra0 set ATE=ATESTOP

This CMD will STOP ATE mode.

4.1.11 iwpriv ra0 set ATE=TXREVERT

This CMD will free buffer packets, when change wifi band.

MediaTek Confidential
For Jiangdingyong@ twsz.com Use Only

© 2021 MediaTek Inc. All rights reserved.
Unauthorized reproduction or disclosure of this document, in whole or in part, is strictly prohibited.

4.2 DUT Command for Calibration with Instrument - QA

4.2.1 Calibration

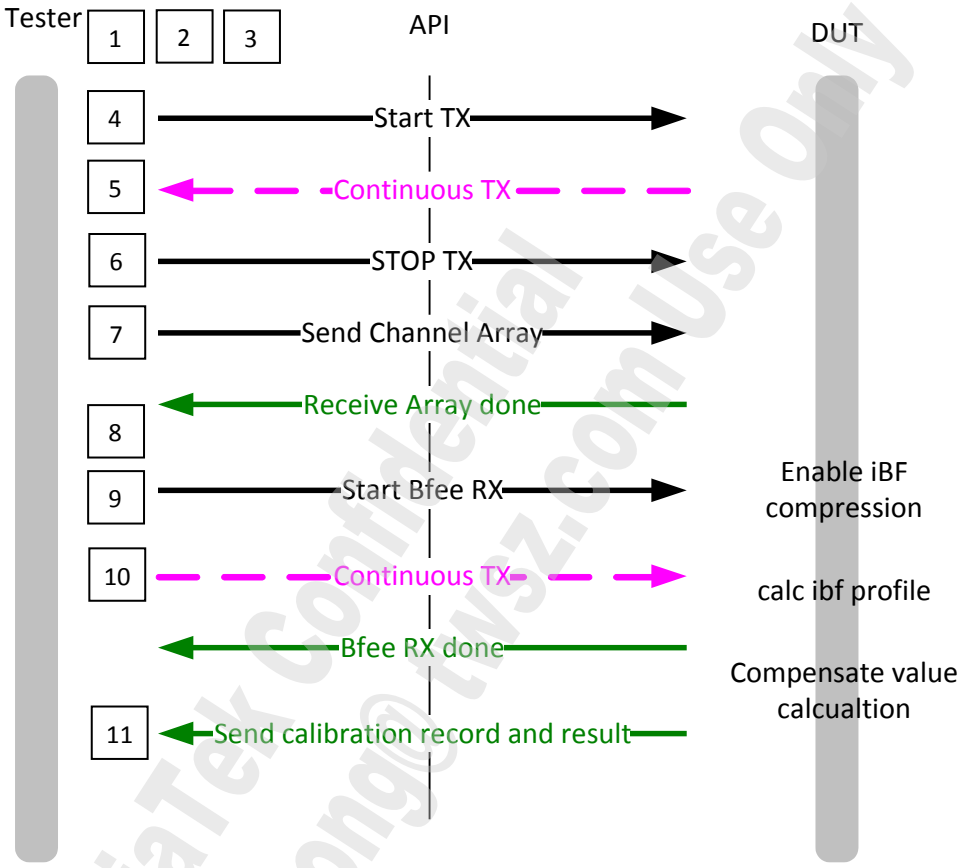

	CMD Script

1	HQA_iBFSetValue(1, 0, xx) // Dut initialization and start to send CMD (xx's bit0 = 0 for band0 and bit0 = 1 for band1; xx's bit4 = 0 for 1st group and xx's bit4 = 1 for next group or same group retrying)
	HQA_iBFSetValue(3, 0, 31) // MCS31

2	HQA_iBFSetValue(2, 1, xx) // xx-channel number and start to send CMD
	HQA_iBFSetValue(2, 2, 0) // For Group0/2/3/4/5/6/7/8
	HQA_iBFSetValue(2, 2, 1) // For Group1
	HQA_iBFSetValue(2, 0, 0) // Start to send CMD

3	// Clear compensate Tx/Rx phases
	HQA_iBFSetValue(9,1,0) // BW 20M
	HQA_iBFSetValue(9,2,aa) // aa : 0 for 2.4G band0 or 4x4 single band, 1 for 5G band1
	HQA_iBFSetValue(9,3,bb) // bb : Group ID

MediaTek Confidential
For jiangdingyong@twsz.com Use Only

© 2021 MediaTek Inc. All rights reserved.
Unauthorized reproduction or disclosure of this document, in whole or in part, is strictly prohibited.

	CMD Script

	HQA_iBFSetValue(9,4,0) // 0 for reading calibrated phases from local memory;
	// 1 for reading calibrated phases from EEPROM
	HQA_iBFSetValue(9,5,1) // 0 for nothing, 1 for clear CRs' compensated phases
	HQA_iBFSetValue(9,0,0)

4	// Configure eBF PFMU profile to ready to update channel profile
	HQA_iBFSetValue(12, 1, 1) // PFMU ID = 1
	HQA_iBFSetValue(12, 2, 3) // Nr = 4
	HQA_iBFSetValue(12, 3, 0) // Nc = 1
	HQA_iBFSetValue(12, 0, 0) // Start to send CMD
	
	// Tx data packet
	HQA_iBFSetValue(10, 1, 0) // BF off
	HQA_iBFSetValue(10, 2, 1) // Wlan ID = 1
	HQA_iBFSetValue(10, 3, 0) // Continuous Tx packet
	HQA_iBFSetValue(10, 4, 0) // Tx commit is required ? 0 : None; 1 : Required
	HQA_iBFSetValue(10, 0, 0) // Start to send CMD

5	Instrument start to calculate channel profile

6	// Stop Tx
	HQA_iBFSetValue(10, 1, 0) // BF off
	HQA_iBFSetValue(10, 2, 1) // Wlan ID = 1
	HQA_iBFSetValue(10, 3, 1) // Stop Tx
	HQA_iBFSetValue(10, 4, 0) // Tx commit is required ? 0 : None; 1 : Required
	HQA_iBFSetValue(10, 0, 0) // Start to send CMD

7	HQA_iBFChanAllProfUpdate (12, 1, profile data)

8	// Configure iBF PFMU profile to ready to update channel profile
	HQA_iBFSetValue(11, 1, 2) // PFMU ID = 2
	HQA_iBFSetValue(11, 2, 3) // Nr = 4
	HQA_iBFSetValue(11, 3, 0) // Nc = 1
	HQA_iBFSetValue(11, 0, 0) // Start to send CMD
	
	// Set Dut as Rx
	HQA_iBFSetValue(6, 0, 0)

9	Equipment start to Tx data packet (OFDM 54M)

10	// Start to do the iBF phase calibration
	HQA_iBFSetValue(13, 1, gg) // gg : Group0~8
	HQA_iBFSetValue(13, 2, 1) // 1: middle channel
	HQA_iBFSetValue(13, 3, aa) // aa : 0 for DBDC band0 or 4x4 single band, 1 for DBDC band1

MediaTek Confidential
For jiangdingyong@twsz.com Use Only

© 2021 MediaTek Inc. All rights reserved.
Unauthorized reproduction or disclosure of this document, in whole or in part, is strictly prohibited.

	CMD Script

	HQA_iBFSetValue(13, 4, 3) // Calibration with instrument
	HQA_iBFSetValue(13, 0, 1) // Middle gain

11	// Read done status of iBF phase calibration
	
	Do
	{
	    HQA_iBFGetStatus(9,0,&iBF_Cal_Status,0,0);
	    Delay (10ms)
	    LoopCnt++
	} While ((iBF_cal_Status == FALSE) && (LoopCnt < 100))

12	Step2: xx = 1 (middle channel) Step3 ~ Step6 Step7: Equipment should set channel[xx] and then Tx, xx = 1 (middle channel) Step8: xx = 1 (middle channel) Step9

4.2.2 Verification

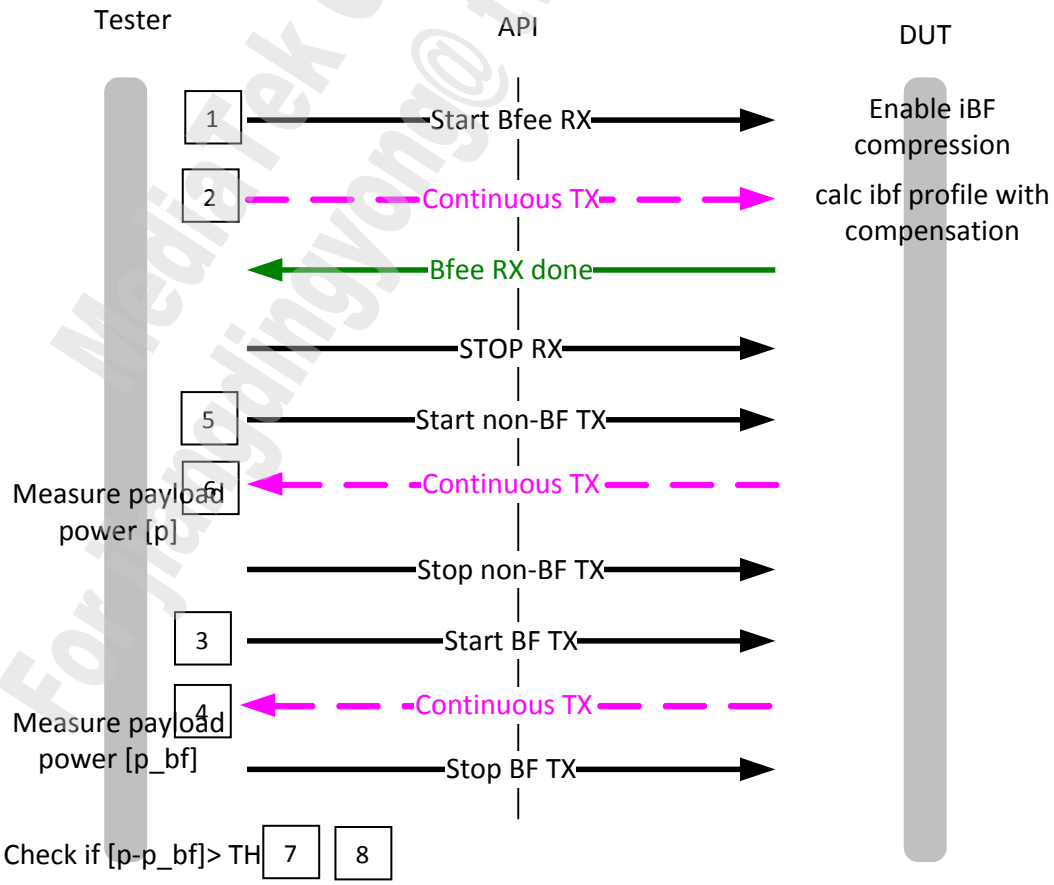

MediaTek Confidential
For Tingdingyong@twsz.com Use Only

© 2021 MediaTek Inc. All rights reserved.
Unauthorized reproduction or disclosure of this document, in whole or in part, is strictly prohibited.

	CMD script

1	// Compensate Tx/Rx phases
	HQA_iBFSetValue(9,1,0) // BW 20M
	HQA_iBFSetValue(9,2,aa) // aa : 0 for 2.4G band0 or 4x4 single band, 1 for 5G band1
	HQA_iBFSetValue(9,3,gg) // gg : Group0~8
	HQA_iBFSetValue(9,4,0)
	HQA_iBFSetValue(9,5,0) // 0 for reading calibrated phases from local memory;
	1 for reading calibrated phases from EEPROM
	HQA_iBFSetValue(9,0,0)
	
	// Set Dut as Rx
	HQA_iBFSetValue(6, 0, 0)

2	Equipment start to Tx packets (OFDM 54M)

3	// Set MCS rate
	HQA_iBFSetValue(3,0,0) // Set MCS0 for Tx data packets
	
	// BF Tx
	HQA_iBFSetValue(10,1,1) // BF on
	HQA_iBFSetValue(10,2,1)
	HQA_iBFSetValue(10,3,0)
	HQA_iBFSetValue(10,4,1) // Tx commit is required ? 0 : None; 1 : Required
	HQA_iBFSetValue(10,0,0)

4	Equipment start to measure averaged Tx power P_Bf

5	// None-BF Tx
	HQA_iBFSetValue(10,1,0) // BF off
	HQA_iBFSetValue(10,2,1)
	HQA_iBFSetValue(10,3,0)
	HQA_iBFSetValue(10,4,1) // Tx commit is required ? 0 : None;
	HQA_iBFSetValue(10,0,0)

6	Equipment start to measure averaged Tx power P_NBf
7	BF gain = P_Bf – P_NBf > 4dB for 2x2 AP to 1x1 STA

8	When all of groups are calibrated and can pass criterion, start to write the calibrated phases of groups into EEPROM
	HQA_iBFSetValue(16,1,0)
	HQA_iBFSetValue(16,2,0)
	HQA_iBFSetValue(16,3,1) // Write the calibrated phase of all of group into EEPROM
	HQA_iBFSetValue(16,0,0)

☺ Once all of calibration is done and will close adaptor, please add following three CMDs to release wdev's allocation before close adaptor

iwpriv rai0 set ATE=TXSTOP

MediaTek Confidential
longyong@twsz.com Use Only

© 2021 MediaTek Inc. All rights reserved.
Unauthorized reproduction or disclosure of this document, in whole or in part, is strictly prohibited.

iwpriv rai0 set ATE=RXSTOP
iwpriv rai0 set ATE=TXREVERT

4.3 DUT Command for Calibration with Instrument - Iwpriv

4.3.1 Calibration

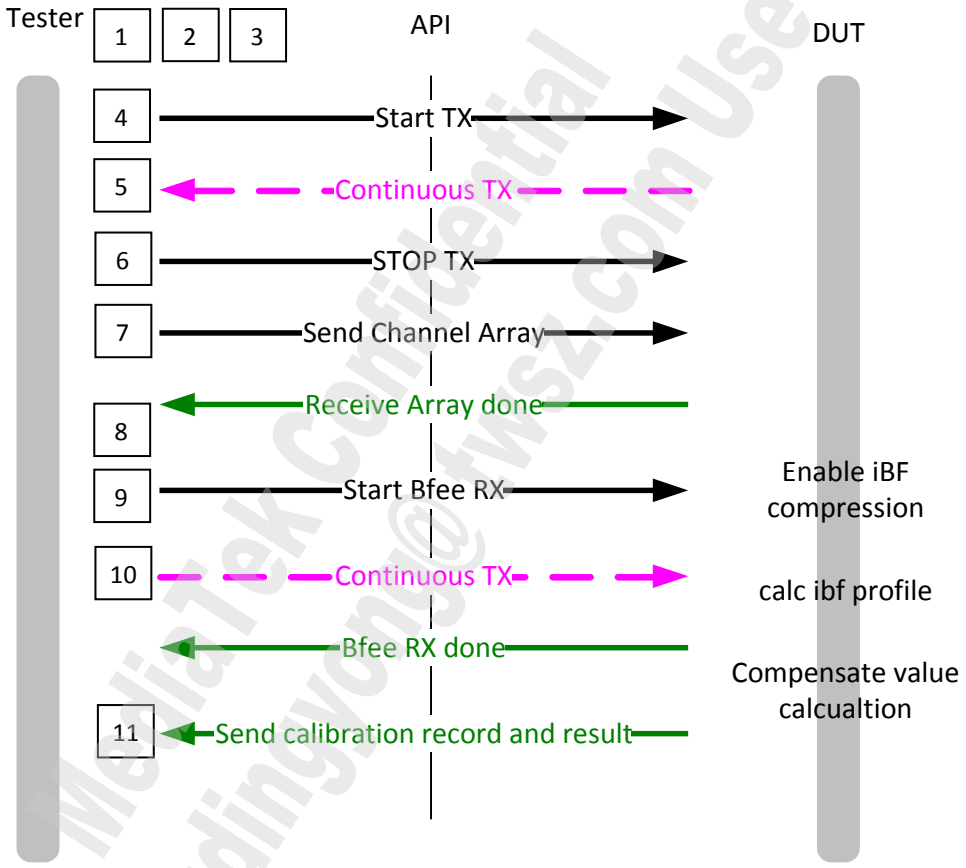

	CMD Script
1	iwpriv ra0 set ATE=ATESTART iwpriv ra0 set ATECTRLBANDIDX=0 (2G), 1 (5G) iwpriv ra0 set ATETxBfInit=0 (2G), 1(5G)
2	iwpriv ra0 set ATECHANNEL=xx:yy (xx: Channel index; yy: 0 for none-JP channel, 1 for JP channel)
3	`// Clear compensate Tx/Rx phases` iwpriv ra0 set ATEIBFPhaseComp=00:00:aa:00:01 (aa : Group ID)

4	`// Configure eBF PFMU profile to ready to update channel profile`
	iwpriv ra0 set ATEEBfProfileConfig=01:xx:00 (xx : 3 for Nr = 4)
	
	`// Tx data packet`

MediaTek Confidential
For Jiangdingyong@twsz.com Use Only

© 2021 MediaTek Inc. All rights reserved.
Unauthorized reproduction or disclosure of this document, in whole or in part, is strictly prohibited.

	CMD Script
	iwpriv ra0 set ATETXMCS=31 iwpriv ra0 set TxBfTxApply=01:01:00:00:01 iwpriv ra0 set ATETxPacketWithBf=00:01:00 // Start continuous Tx
5	Instrument start to calculate channel profile
6	// Stop Tx iwpriv ra0 set ATETxPacketWithBf=00:01:01
7	Instrument writes channel profile to DUT iwpriv ra0 set TxBfProfileData20MAllWrite=00:Ang11:Ang21:Ang31:Ang41:01:Ang11:Ang21: Ang31:Ang41: ……07:Ang11:Ang21:Ang31:Ang41 iwpriv ra0 set TxBfProfileData20MAllWrite=08:Ang11:Ang21:Ang31:0000:09:Ang11:Ang21: Ang31:Ang41: ……0F:Ang11:Ang21:Ang31:Ang41 iwpriv ra0 set TxBfProfileData20MAllWrite=10:Ang11:Ang21:Ang31:Ang41:11:Ang11:Ang21: Ang31:Ang41: ……17:Ang17:Ang21:Ang31:Ang41 iwpriv ra0 set TxBfProfileData20MAllWrite=18:Ang11:Ang21:Ang31:Ang41:19:Ang11:Ang21: Ang31:Ang41: ……1F:Ang11:Ang21:Ang31:Ang41 iwpriv ra0 set TxBfProfileData20MAllWrite=20:Ang11:Ang21:Ang31:Ang41:21:Ang11:Ang21: Ang31:Ang41: ……27:Ang11:Ang21:Ang31:Ang41 iwpriv ra0 set TxBfProfileData20MAllWrite=28:Ang11:Ang21:Ang31:Ang41:29:Ang11: Ang21: Ang31:Ang41: ……2F:Ang11:Ang21:Ang31:Ang41 iwpriv ra0 set TxBfProfileData20MAllWrite=30:Ang11:Ang21:Ang31:Ang41:31:Ang11: Ang21: Ang31:Ang41: ……37:Ang11:Ang21:Ang31:Ang41 iwpriv ra0 set TxBfProfileData20MAllWrite=38:Ang11:Ang21:Ang31:Ang41:39:Ang11: Ang21: Ang31:Ang41: ……3F:Ang11:Ang21:Ang31:Ang41 iwpriv ra0 set TxBfProfileData20MAllWrite=01:FF // Stop to update
8	// Configure iBF PFMU profile to ready to update channel profile iwpriv ra0 set ATEIBfProfileConfig=02:xx:00 (xx : 3 for Nr = 4)

9	// Enable DUT's Rx
	iwpriv ra0 set ATE=RXFRAME
	
	//Equipment start to Tx data packet (OFDM 54M)
	Note: The packet format request,
	Source Address=00:11:11:11:11:11
	Destination Address=00:22:22:22:22:22
	BSSID=00:22:22:22:22:22
	Length=1024

10	// Enable iBF Rx
	iwpriv ra0 set TxBfTxApply=01:00:01:00:01
	
	// Start to do the iBF phase calibration
	iwpriv ra0 set ATEIBfInstCal=aa:01:bb:03:01 (aa : Group index, bb: 00 for 2G, 11 for 5G)

11	// Read done status of iBF phase calibration dmesg -c

MediaTek Confidential
For Yuqing Ying@WSC.com Use Only

© 2021 MediaTek Inc. All rights reserved.
Unauthorized reproduction or disclosure of this document, in whole or in part, is strictly prohibited.

	CMD Script
	Do { dmesg -c Parsing UART log () “Calibration == 1? or Verification == 2? : 1” && “Calibrated result = 1” Counter++ Delay(10ms) } While ((iBF_cal_Status == FALSE) && (LoopCnt < 100))
12	Instrument stops to Tx

4.3.2 Verification

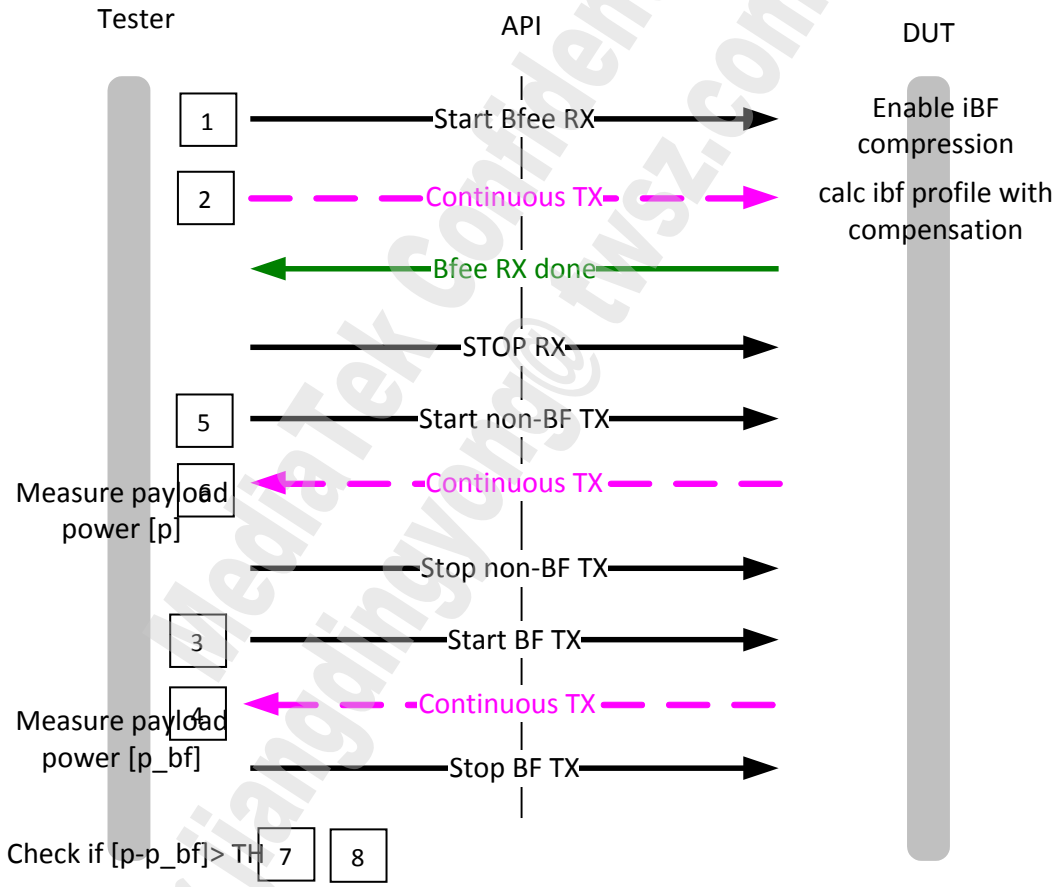

	CMD Script
1	// Compensate Tx/Rx phases

MediaTek Confidential
For liangdingyong@ twsz.com Use Only

© 2021 MediaTek Inc. All rights reserved.
Unauthorized reproduction or disclosure of this document, in whole or in part, is strictly prohibited.

	CMD Script
	iwpriv ra0 set ATEIBFPhaseComp=00:00:aa:00:00 (aa : group idx)

2	// Enable DUT's Rx
	iwpriv ra0 set ATE=RXFRAME
	
	//Equipment start to Tx packets (OFDM 54M)
	Note: The packet format request,
	Source Address=00:11:11:11:11:11
	Destination Address=00:22:22:22:22:22
	BSSID=00:22:22:22:22:22
	Length=1024

3	// Set MCS rate
	iwpriv ra0 set ATETXMCS=4
	
	// BF Tx
	iwpriv ra0 set ATETxPacketWithBf=01:01:00

4	Equipment start to measure averaged Tx power P_Bf
5	// None-BF Tx iwpriv ra0 set ATETxPacketWithBf=00:01:00
6	Equipment start to measure averaged Tx power P_NBf

7	//Stop DUT's Tx
	iwpriv ra0 set ATE=TXSTOP
	
	// Calculate iBF gain
	BF gain = P_Bf – P_NBf > 10dB for 4x4 AP to 1x1 STA

8	When all of groups are calibrated and can pass criterion, start to write the calibrated phases of groups into EEPROM iwpriv ra0 set ATEIBFPhaseE2pUpdate=00:00:01 // For 2+5G ated -i ra0 -c "sync eeprom all" // Stop all of Tx and Rx and then go back to normal mode iwpriv ra0 set ATE=RXSTOP iwpriv ra0 set ATE=TXSTOP iwpriv ra0 set ATE=TXREVERT iwpriv ra0 set ATE=ATESTOP

MediaTek Confidential
For jiangdingyong@twsz.com Use Only

© 2021 MediaTek Inc. All rights reserved.
Unauthorized reproduction or disclosure of this document, in whole or in part, is strictly prohibited.

4.4 DUT Command for Calibration with Golden

4.4.1 2G Band with Golden

Action	DUT command (7986)	Golden command (7986)	
		iwpriv ra0 set ATE=ATESTART iwpriv ra0 set ATECTRLBANDIDX=0 iwpriv ra0 set ATETxBfGdInit=0	Init Golden
Init DUT	iwpriv ra0 set ATE=ATESTART iwpriv ra0 set ATECTRLBANDIDX=0 iwpriv ra0 mac 820E3030=301 iwpriv ra0 set ATETxBfInit=0		
CH index initialization	CH_Idx = 1 (Group1~8)		
Loop for iBF calibration per channel XX = 8 channel index	iwpriv ra0 set ATEIBFPhaseComp =00:00:00:00:01		
	iwpriv ra0 set ATECHANNEL=XX		Loop for iBF calibration per channel XX = 5G
		iwpriv ra0 set ATECHANNEL=XX	
	iwpriv ra0 set ATE=RXFRAME		
		iwpriv ra0 set ATE=RXFRAME iwpriv ra0 set ATETXCNT=1 iwpriv ra0 set ATE=TXFRAME	
	iwpriv ra0 set ATEEBfProfileConfig= 01:03:00		
	iwpriv ra0 set TxBfTxApply=01:01:00:00:01		
	iwpriv ra0 set TriggerSounding= 02:01:0C:01:00:00:00		
	Sleep 0.1s		
	iwpriv ra0 set StopSounding=1		
	iwpriv ra0 set ATEIBfProfileConfig= 02:03:00		
	iwpriv ra0 set TxBfTxApply=01:00:01:00:01		
		iwpriv ra0 set ATE=TXSTOP iwpriv ra0 set ATETXCNT=0 iwpriv ra0 set ATE=TXFRAME	
	iwpriv ra0 set ATEIBfGdCal=00:00:01:01		

MediaTek Confidential
For jiaqiang.yong@mtk.com Use Only

© 2021 MediaTek Inc. All rights reserved.
Unauthorized reproduction or disclosure of this document, in whole or in part, is strictly prohibited.

Loop for iBF verification at channel 8	iwpriv ra0 set ATEIBFPhaseVerify=00:01:00:02:01:00		Loop for iBF verification at channel XX
		iwpriv ra0 set ATE=TXSTOP	

Note: Please re-calibration when you adjust the calibration environment.

4.4.2 5G Band with Golden

Action	DUT command (7986 4x4)	Golden command (7986 1x1)	
		iwpriv ra0 set ATE=ATESTART iwpriv ra0 set ATECTRLBANDIDX=1 iwpriv ra0 set ATETxBfGdInit=1	Init Golden
Init DUT	iwpriv ra0 set ATE=ATESTART iwpriv ra0 set ATECTRLBANDIDX=1 iwpriv ra0 mac 820E3030=301 iwpriv ra0 set ATETxBfInit=1		
CH index initialization	CH_Idx = 1 (Group1~8)		
Loop for iBF calibration per channel XX = 5G channel index	iwpriv ra0 set ATEIBFPhaseComp =00:00:00:00:01		
	iwpriv ra0 set ATECHANNEL=XX		Loop for iBF calibration per channel XX = 5G
		iwpriv ra0 set ATECHANNEL=XX	
	iwpriv ra0 set ATE=RXFRAME		
		iwpriv ra0 set ATE=RXFRAME iwpriv ra0 set ATETXCNT=1 iwpriv ra0 set ATE=TXFRAME	
	iwpriv ra0 set ATEEBfProfileConfig= 01:03:00		
	iwpriv ra0 set TxBfTxApply=01:01:00:00:01		
	iwpriv ra0 set TriggerSounding= 02:01:0C:01:00:00:00		
	Sleep 0.1s		
	iwpriv ra0 set StopSounding=1		
	iwpriv ra0 set ATEIBfProfileConfig= 02:03:00		
	iwpriv ra0 set TxBfTxApply=01:00:01:00:01		
		iwpriv ra0 set ATE=TXSTOP iwpriv ra0 set ATETXCNT=0	

MediaTek Confidential
For liqingyong@ iwsz.com Use Only

© 2021 MediaTek Inc. All rights reserved.
Unauthorized reproduction or disclosure of this document, in whole or in part, is strictly prohibited.

		iwpriv ra0 set ATE=TXFRAME	
	iwpriv ra0 set ATEIBfGdCal=CH_Idx:01:01:01		
	CH_Idx = CH_Idx + 1		
Loop for iBF verification at channel XX			Loop for iBF verification at channel XX
	iwpriv ra0 set ATEIBFPhaseVerify=CH_Idx:01:01:02:01:00		
		iwpriv ra0 set ATE=TXSTOP	
Update phase to EEPROM and STOP ATE Mode	iwpriv ra0 set ATEIBFPhaseE2pUpdate=00:00:01 (Update 2+5G) iwpriv ra0 set ATE=RXSTOP iwpriv ra0 set ATE=TXSTOP iwpriv ra0 set ATE=TXREVERT iwpriv ra0 set ATE=ATESTOP ated -i ra0 -c "sync eeprom all"		

Note: Please re-calibration when you adjust the calibration environment.

MediaTek Confidential
For jiangdingyong@ tvsz.com Use Only

© 2021 MediaTek Inc. All rights reserved.
Unauthorized reproduction or disclosure of this document, in whole or in part, is strictly prohibited.

5 iBF Calibration Data Layout in EEPROM

EEPROM Address	iBF Channel Group
0x651~0x678	2.4G band/ Group0/ Channel8/ Freq. 2447MHz
0x679~0x6A0	5G band/ Group1/ Channel196/ Freq. 4980MHz
0x6A1~0x6C8	5G band/ Group2/ Channel44/ Freq. 5220MHz
0x6C9~0x6F0	5G band/ Group3/ Channel60/ Freq. 5300MHz
0x6F1~0x718	5G band/ Group4/ Channel84/ Freq. 5420MHz
0x719~0x740	5G band/ Group5/ Channel104/ Freq. 5520MHz
0x741~0x768	5G band/ Group6/ Channel124/ Freq. 5620MHz
0x769~0x790	5G band/ Group7/ Channel149/ Freq. 5745MHz
0x791~0x7B8	5G band/ Group8/ Channel173/ Freq. 5865MHz

Group0

Channel	Frequency (MHz)
1	2412
2	2417
3	2422
4	2427
5	2432
6	2437
7	2442
8	**2447**
9	2452
10	2457
11	2462
12	2467
13	2472
14	2484

Group1~8

	BW20		BW40	
group1	11A_CH184	4920	BW40_CH186	4930
	11A_CH188	4940	BW40_CH194	4970
	11A_CH192	4960	BW40_CH10	5050
	11A_CH196	**4980**		

	BW20		BW40	
group5	11A_CH96	5480	BW40_CH102	5510
	11A_CH100	5500	BW40_CH110	5550
	11A_CH104	**5520**		
	11A_CH108	5540		

MediaTek Confidential
For jiangdingyong@ twsz.com Use Only

© 2021 MediaTek Inc. All rights reserved.
Unauthorized reproduction or disclosure of this document, in whole or in part, is strictly prohibited.

	11A_CH8	5040		
	11A_CH12	5060		
	11A_CH16	5080		
Group2	11A_CH36	5180	BW40_CH38	5190
	11A_CH40	5200	BW40_CH46	5230
	11A_CH44	**5220**		
	11A_CH48	5240		
group3	11A_CH52	5260	BW40_CH54	5270
	11A_CH56	5280	BW40_CH62	5310
	11A_CH60	**5300**	BW40_CH70	5350
	11A_CH64	5320		
	11A_CH68	5340		
group4	11A_CH72	5360	BW40_CH78	5390
	11A_CH76	5380	BW40_CH86	5430
	11A_CH80	5400	BW40_CH94	5470
	11A_CH84	**5420**		
	11A_CH88	5440		
	11A_CH92	5460		

	11A_CH112	5560		
Group6	11A_CH116	5580	BW40_CH118	5590
	11A_CH120	5600	BW40_CH126	5630
	11A_CH124	**5620**	BW40_CH134	5670
	11A_CH128	5640		
	11A_CH132	5660		
	11A_CH136	5680		
group7	11A_CH140	5700	BW40_CH142	5710
	11A_CH144	5720	BW40_CH151	5755
	11A_CH149	**5745**	BW40_CH159	5795
	11A_CH153	5765		
	11A_CH157	5785		
group8	11A_CH161	5805	BW40_CH167	5835
	11A_CH165	5825	BW40_CH175	5875
	11A_CH169	5845		
	11A_CH173	**5865**		
	11A_CH177	5885		
	11A_CH181	5905		

Note: After iBF calibration has done, please make sure the iBF data is stored in EEPROM.

MediaTek Confidential
For jiangjingyong@tyhsz.com use only

© 2021 MediaTek Inc. All rights reserved.
Unauthorized reproduction or disclosure of this document, in whole or in part, is strictly prohibited.

6 Debug SOP of iBF Calibration with Golden

1. If you encounter all the calibration phase is 0. Please check whether ITxBF and ETxBF is enabled, and make sure the topology is follow Chapter 2.) Calibration Environment

```
Group : 0
Calibration == 1? or Verification == 2? : 1
Calibrated result = 0
0 : Means failed
 1: means pass
 2: means on-going
C0_H : 0, C1_H : 0, C2_H : 0
 C0_M : 0, C1_M : 0, C2_M : 0
 C0_L : 0, C1_L : 0, C2_L : 0
 C3_M : 0, C3_L : 0
iBFPhaseCalReport :: Calibrated iBF phases
Group : 0
Calibration == 1? or Verification == 2? : 2
Calibrated result = 0
0 : Means failed
 1: means pass
 2: means on-going
C0_H : 0, C1_H : 0, C2_H : 0
 C0_M : 0, C1_M : 0, C2_M : 0
 C0_L : 0, C1_L : 0, C2_L : 0
 C3_M : 0, C3_L : 0
```

2. If you encounter the calibration phase is not 0 but still calibration fail. Please check whether DUT and Golden within Shield box, and make sure the topology is follow Chapter 2.) Calibration Environment.

MediaTek Confidential
For jiangdingyong@twsz.com Use Only

© 2021 MediaTek Inc. All rights reserved.
Unauthorized reproduction or disclosure of this document, in whole or in part, is strictly prohibited.

```
Group : 0
Calibration == 1? or Verification == 2? : 1
Calibrated result = 1
0 : Means failed
 1: means pass
 2: means on-going
C0_H : 117, C1_H : 21, C2_H : 227
 C0_M : 126, C1_M : 245, C2_M : 244
 C0_L : 118, C1_L : 220, C2_L : 228
 C3_M : 96, C3_L : 100
SetATEIBfPhaseVerify
iBFPhaseCalReport :: Calibrated iBF phases
Group : 0
Calibration == 1? or Verification == 2? : 2
Calibrated result = 0
0 : Means failed
 1: means pass
 2: means on-going
C0_H : 0, C1_H : 0, C2_H : 0
 C0_M : 0, C1_M : 0, C2_M : 0
 C0_L : 12, C1_L : 24, C2_L : 8
 C3_M : 0, C3_L : 0
```

MediaTek Confidential
For jiangdingyong@ twsz.com Use Only

© 2021 MediaTek Inc. All rights reserved.
Unauthorized reproduction or disclosure of this document, in whole or in part, is strictly prohibited.

Exhibit 1 Terms and Conditions

Your access to and use of this document and the information contained herein (collectively this "Document") is subject to your (including the corporation or other legal entity you represent, collectively "You") acceptance of the terms and conditions set forth below ("T&C"). By using, accessing or downloading this Document, You are accepting the T&C and agree to be bound by the T&C. If You don't agree to the T&C, You may not use this Document and shall immediately destroy any copy thereof.

This Document contains information that is confidential and proprietary to MediaTek Inc. and/or its affiliates (collectively "MediaTek") or its licensors and is provided solely for Your internal use with MediaTek's chipset(s) described in this Document and shall not be used for any other purposes (including but not limited to identifying or providing evidence to support any potential patent infringement claim against MediaTek or any of MediaTek's suppliers and/or direct or indirect customers). Unauthorized use or disclosure of the information contained herein is prohibited. You agree to indemnify MediaTek for any loss or damages suffered by MediaTek for Your unauthorized use or disclosure of this Document, in whole or in part.

MediaTek and its licensors retain titles and all ownership rights in and to this Document and no license (express or implied, by estoppels or otherwise) to any intellectual propriety rights is granted hereunder. This Document is subject to change without further notification. MediaTek does not assume any responsibility arising out of or in connection with any use of, or reliance on, this Document, and specifically disclaims any and all liability, including, without limitation, consequential or incidental damages.

THIS DOCUMENT AND ANY OTHER MATERIALS OR TECHNICAL SUPPORT PROVIDED BY MEDIATEK IN CONNECTION WITH THIS DOCUMENT, IF ANY, ARE PROVIDED "AS IS" WITHOUT WARRANTY OF ANY KIND, WHETHER EXPRESS, IMPLIED, STATUTORY, OR OTHERWISE. MEDIATEK SPECIFICALLY DISCLAIMS ALL WARRANTIES OF MERCHANTABILITY, NON-INFRINGEMENT, FITNESS FOR A PARTICULAR PURPOSE, COMPLETENESS OR ACCURACY AND ALL WARRANTIES ARISING OUT OF TRADE USAGE OR OUT OF A COURSE OF DEALING OR COURSE OF PERFORMANCE. MEDIATEK SHALL NOT BE RESPONSIBLE FOR ANY MEDIATEK DELIVERABLES MADE TO MEET YOUR SPECIFICATIONS OR TO CONFORM TO A PARTICULAR STANDARD OR OPEN FORUM.

Without limiting the generality of the foregoing, MediaTek makes no warranty, representation or guarantee regarding the suitability of its products for any particular purpose, nor does MediaTek assume any liability arising out of the application or use of any product, circuit or software. You agree that You are solely responsible for the designing, validating and testing Your product incorporating MediaTek's product and ensure such product meets applicable standards and any safety, security or other requirements.

The above T&C and all acts in connection with the T&C or this Document shall be governed, construed and interpreted in accordance with the laws of Taiwan, without giving effect to the principles of conflicts of law.

MediaTek Confidential
For jiangdingyong@tcl.com Use Only

© 2021 MediaTek Inc. All rights reserved.
Unauthorized reproduction or disclosure of this document, in whole or in part, is strictly prohibited.