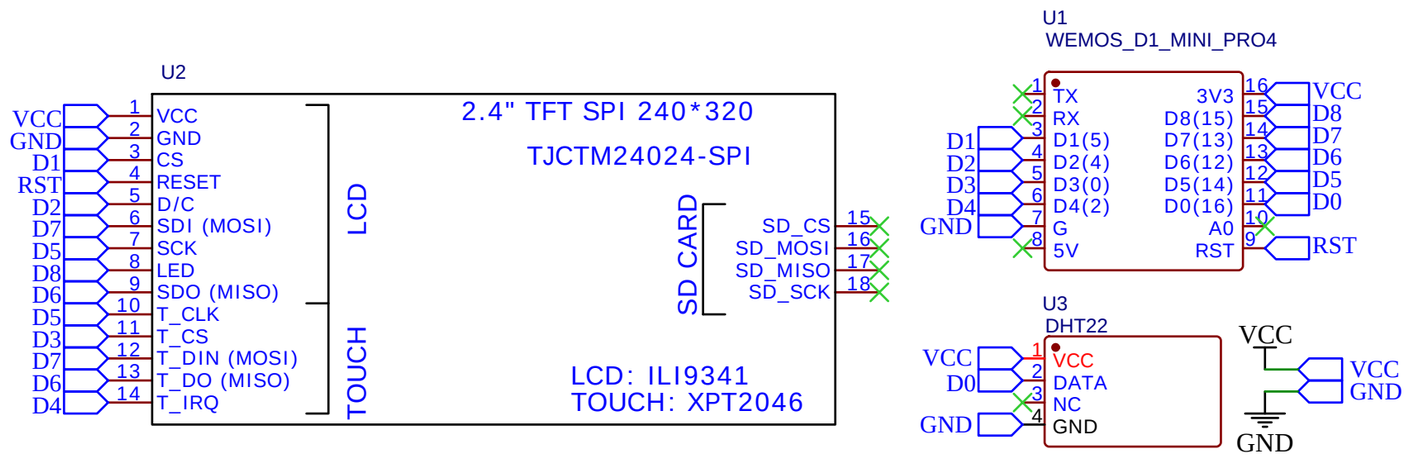

TITLE: esp8266 weather color station		REV: 1.0
EasyEDA	Company: afreisinger@gmail.com	Sheet: 1/1
	Date: 2021-08-03 Drawn By: Adrián Freisinger	