144/430MHz FM DUAL BANDER

TM-721A/E

SERVICE MANUAL

KENWOOD

©1988-2 PRINTED IN JAPAN
B51-3476-00(T)864

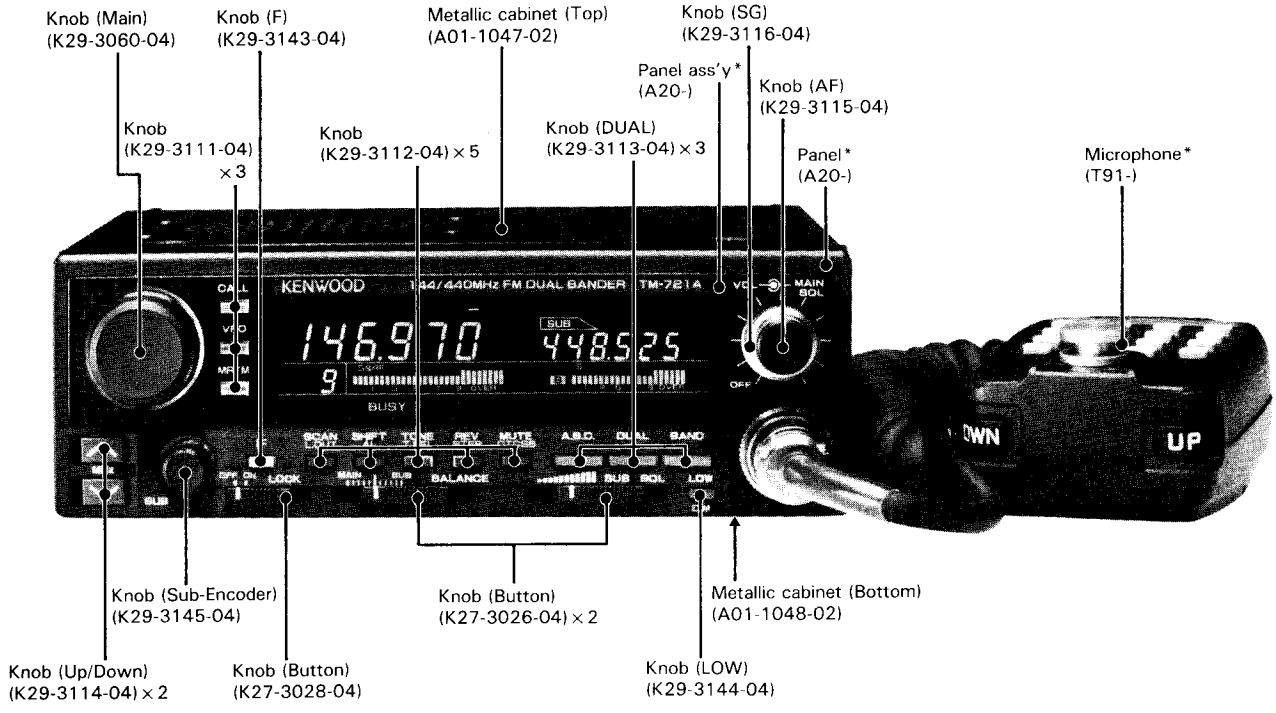

*Refer to parts list on page 25.
Photo is TM-721A.

CONTENTS

CIRCUIT DESCRIPTION 2
DESCRIPTION OF ELEMENTS 17
PARTS LIST 25
EXPLODED VIEW 46
PACKING 48
ADJUSTMENT 49
TERMINAL FUNCTIONS 56
PC BOARD VIEW/SCHEMATIC DIAGRAM
144 MHz VCO UNIT (X58-3340-00) 59
430 MHz VCO UNIT (X58-3330-00) 60
CONTROL UNIT (X53-3130-XX) 61
144 MHz TX-RX UNIT (X57-3230-XX) 63
430 MHz TX-RX UNIT (X57-3210-XX) 65
FINAL UNIT (430 MHz) (X45-3180-XX) 67
FINAL UNIT (144 MHz) (X45-3180-XX) 68
SCHEMATIC DIAGRAM 69
LEVEL DIAGRAM 73
BLOCK DIAGRAM 75
TSU-6 (CTCSS UNIT) 76
SPECIFICATIONS ..... Back cover

CIRCUIT DESCRIPTION

Frequency Configuration

The TM-721A/E uses a synthesized PLL and includes a variablefrequency oscillator that enables selection of 5 kHz, 10 kHz, 12.5 kHz, 20 kHz, or 25 kHz channel steps. (**See Fig. 1.**)

Signals received in the 144 MHz band are down-converted to a first intermediate frequency of 10.7 MHz (M.T.W) and 16.9 MHz (K) by mixing with the first local oscillator frequency (133.3 MHz to 135.3 MHz (T.W), 172.1 MHz to 131.100 MHz (K), 131.1 MHz to 137.30 MHz (M)), and then to the second intermediate frequency of 455 kHz by mixing with the second local oscillator frequency of 10.245 MHz (M.T.W) and 17.355 MHz (K).

Signals received in the 430 MHz band are down-converted to the first intermediate frequency of 30.825 MHz (M.T.W) and 21.6 MHz (K) by mixing with the first local oscillator frequency (399.175 MHz to 409.175 MHz (M.T.W), 416.400 MHz to 428.400 MHz (K)), and then to the second intermediate frequency of 455 kHz by mixing with the second local oscillator frequency of 30.37 MHz (M.T.W) and 21.145 MHz (K). Double conversion is thus used for both the 144 MHz and 430 MHz bands.

The transmitted signal for both bands is generated direct oscillation and direct frequency division in the phaselocked loop. The signal is amplified by a linear amplifier before being applied for the antenna.

Unit \ Model	TM-721A (K.M)	TM-721E (T.W)
Final Unit	X45-3180-11 (K) X45-3180-21 (M)	X45-3180-51
Control Unit	X53-3130-11 (K) X53-3130-21 (M)	X53-3130-51 (T) X53-3130-61 (W)
430 MHz TX-RX Unit	X57-3210-11 (K) X57-3210-01 (M)	X57-3210-01
144 MHz TX-RX Unit	X57-3230-11 (K) X57-3230-21 (M)	X57-3230-21

Table 1 Comparison of TM-721A and TM-721E

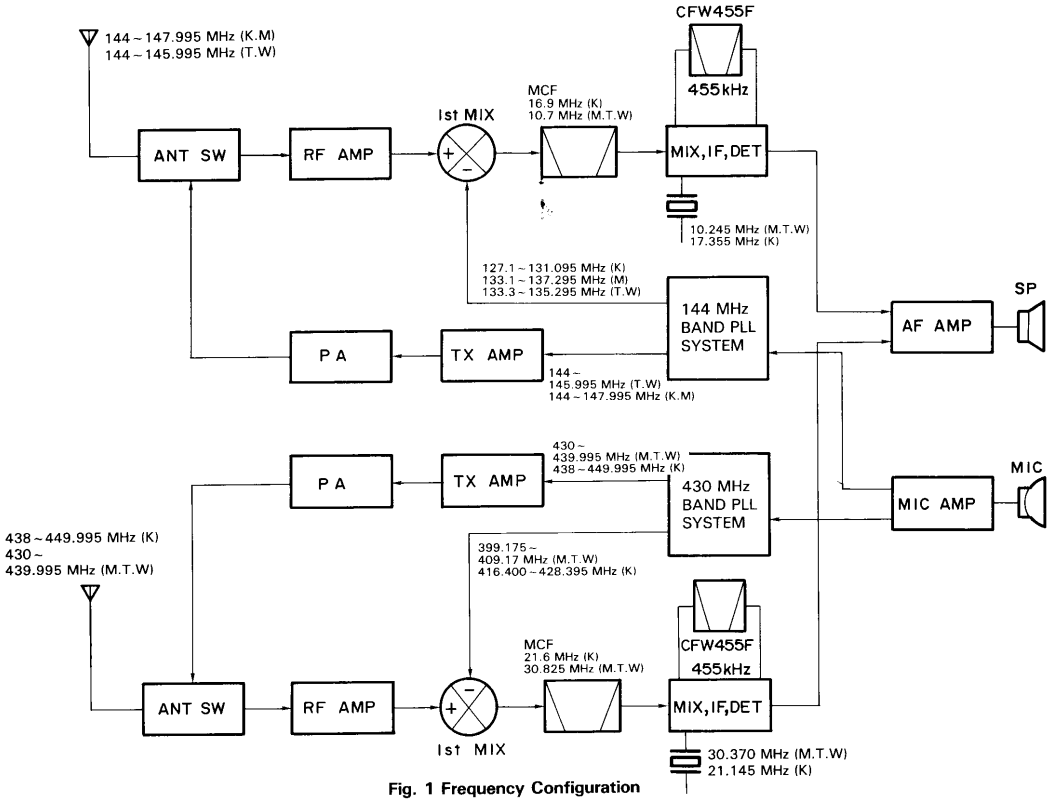

Fig. 1 Frequency Configuration

CIRCUIT DESCRIPTION

Receiver Circuits

• General

This set uses seperate receiver circuits for the 144 MHz and 430 MHz bands. These circuits extend from the antenna input section to the IF detector.

• 144 MHz

The incoming two meter band signal passes thru the transmit/receive switching diode in the final unit. And then through the antenna matching coil in the front unit. It is then amplified by a GaAs FET radio-frequency amplifier, Filtered by a three-stage bandpass filter that uses varicap tuning to reject unwanted signal components, and is fed to the first mixer. There it is mixed with the first local oscillator signal from the PLL to generate the first IF signal (10.7 MHz (M.T.W), 16.9 MHz (K)). Spurious adjacent-channel signals are removed in a two-stage MCF (Monolithic Crystal Filter).

The first IF signal is amplified and fed to the FM IF IC:MC3361D. This IF signal is mixed with the second local oscillator frequency of 10.245 MHz (M.T.W) and 17.355 MHz (K) which results in a second IF signal of 455 kHz.

Spurious adjacent-channel signals are removed from the second IF signal by ceramic filter. Then the signal is amplified and detected to generate the audio signal.

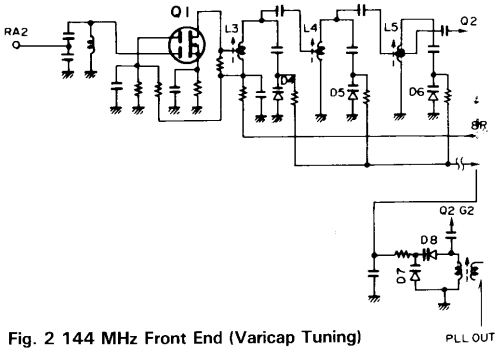

Fig. 2 144 MHz Front End (Varicap Tuning)

• 430 MHz band

The incoming 70 cm signal passes thru the transmit/receive antenna switching diodes in the final unit and then passes through the antenna matching coil. The signal is then fed to a two-stage radio-frequency amplifier consisting of a GaAs FET and a junction-type FET. It then passes through a two-stage two-cauity helical resonator and enters the first mixer, where it is mixed with the first local oscillator signal from the PLL to generate the first IF signal (30.825 MHz (M.T.W), 21.6 MHz (K)). Spurious adjacent-channel signals are removed by a two-stage MCF.

The first IF signal is amplified and fed to the FM IF IC (MC3361D). This IF signal is mixed with a second local oscillator frequency of 30.37 MHz (M.T.W) and 21.145 MHz (K) which converts it to a second IF signal of 455 kHz.

Spurious adjacent-channel signals are removed from the second IF signal by an ceramic filter. The signal is then amplified and detected to generate the audio signal.

Item	Specification
Nominal center frequency	30.825 MHz
Pass bandwidth	Max. ±7.5 kHz at 3 dB
Attenuation band width	Max. ±28 kHz at 40 dB
Ripple	Max. 1.5 dB
Insertion loss	Max. 3 dB
Guaranteed attenuation	60 dB or greater at ±1 MHz; 40 dB or greater for spurious signal
Terminating impedance	1.4 kΩ/1 pF

Table 2 MCF (L71-0270-05) Characteristics (430 MHz TX-RX Unit XF1) (M.T.W)

Item	Rating
Nominal center frequency (fo)	21.600 kHz
3 dB bandwidth	±7.5 kHz or more
Attenuation bandwidth	±25 kHz or less at 40 dB ±45 kHz or less at 60 dB
Guaranteed attenuation	70 dB or more within ±1 MHz (Sprious response 35 dB or more) 80 dB or more within ± (910 kHz ±20 kHz)
Ripple	1.0 dB or less
Loss	2.0 dB or less
Input and output impedance	1 kΩ/1 pF

Table 3 MCF (L71-0227-05) (430 MHz TX-RX unit XF1) (K)

Item	Specification
Nominal center frequency	455 kHz±1 kHz
6 dB bandwidth	Min. ±6 kHz (above 455 kHz)
50 dB bandwidth	Min. ±12.5 kHz (above 455 kHz)
Ripple (455 ±4 kHz)	Max. 3 dB
Insertion loss	Max. 6 dB
Guaranteed attenuation (455 ±100 kHz)	Max. 35 dB
Input-output matching impedance	2.0 kΩ

Table 4 Ceramic Filter CFW455F (L72-0315-05) Characteristics (430 MHz TX-RX Unit CF1, 144MHz TX-RX-Unit CF1)

Item	Rating
Nominal center frequency (fo)	16.900 kHz
3 dB bandwidth	±7.5 kHz or more
Attenuation bandwidth	±25 kHz or less at 40 dB ±45 kHz or less at 60 dB
Guaranteed attenuation	70 dB or more within ±1 MHz (Sprious response 40 dB or more) 80 dB or more within fo − (900 ~ 920 kHz)
Ripple	1.0 dB or less
Loss	1.5 dB or less
Input and output impedance	1.8 kΩ/0 pF

Table 5 MCF (L71-0279-05) Characteristics

CIRCUIT DESCRIPTION

Item	Specification
Nominal center frequency (fo)	10.7 MHz
Pass bandwidth	Max. fo ±7.5 kHz at 3 dB
Attenuation bandwidth	1) Max. ±25 kHz at 40 dB 2) Max. ±45 kHz at 60 dB
Guaranteed attenuation	70 dB or more within ±1 MHz 40 dB or more spurious 80 dB or more within −900 kHz to −920 kHz
Ripple	Max. 1 dB
Insertion loss	Max. 1.5 dB
Terminating impedance	3 kΩ/0 pF

Table 6 MCF (L71-0228-05) Characteristics (144 MHz TX-RX Unit XF1)

• AF Unit

The path from the detector output to the AF power amplifier input consists of two seperate identical circuits for the main band and the subband. The audio signal is first switched by an analog switch into the AF preamplifier for its corresponding band. After amplification, the signal level is adjusted by a two-channel electronic volume control IC:M51523 which is controlled by the MAIN VOLUME and BALANCE controls on the front panel. An AF low-pass filter then removes unwanted high-frequency components. Next the two audio signals are combined to create a single audio signal which is amplified by the audio power amplifier before being applied the speaker. **(See Fig. 3.)**

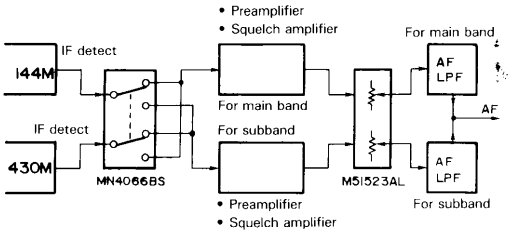

Fig. 3 AF Section

• Squelch Circuits

Independent squelch circuits are provided for the main band and subband. These circuits receive the output from the detector, remove the 50 kHz noise component, amplify the signal with two transistor stages, and rectify it by means of a diode to generate the squelch control signal. After DC amplification, the control signal is used to switch the main and sub preamplifiers on and off.

• S Meter Circuits

Independent S meter circuits for the 144 MHz and 430 MHz bands receive signals from the 455 kHz ceramic filter, amplify if in two-stage meter amplifier, and rectify the resulting signal to generate a DC voltage. The microprocessor converts the analog DC voltage to a digital output that is used to drive an LCD bar meter.

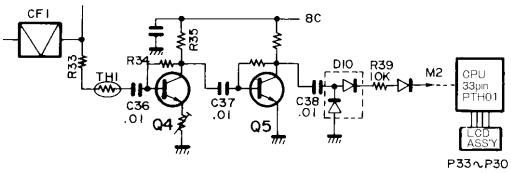

Fig. 4 144 MHz S-meter circuit

• Switching of Balance Range

To disable the BALANCE control in the single mode, the control voltage range of the BALANCE control is switched. This switching is done by a Low signal from the INH (Inhibit) pin of the microprocessor that turns on transistor Q7 in the single mode. Since the center voltage of the balance control resistor is held to approximately 4 V, the voltage at the BAL pin cannot exceed 4 V, so even if the balance VR is moved to the SUB position, the main band remains unattenuated. **(See Fig. 5 and 6.)**

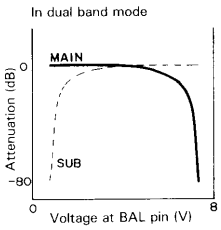

Fig. 5

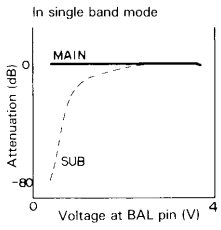

Fig. 6

During normal operation, the two electronic volume controllers in the set operate using the M51523AL, but when the remote control unit (RC-10) is connected and used to adjust the output level, they are controlled by the LC7532M.

When the remote control unit is connected, a High switch control signal is sent from the CE pin of shift register IC4 to force the attenuation of the M51523AL to zero. (Normally the CE output is Low.) The UP and DOWN signals from the shift register then vary the attenuation of the LC7532M. **(See Fig. 7.)**

CIRCUIT DESCRIPTION

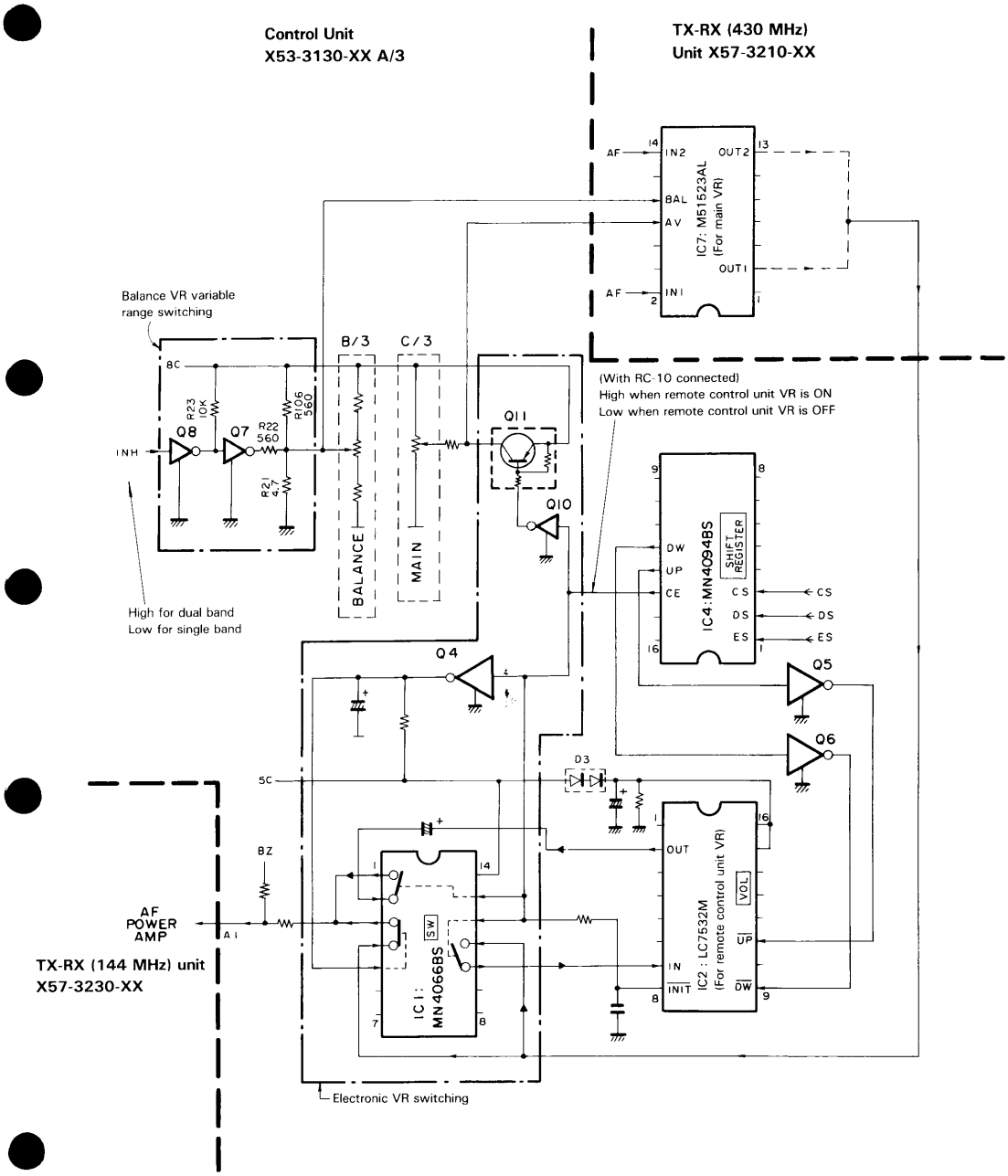

Fig. 7 AF Volume Switching Diagram

CIRCUIT DESCRIPTION

• Muting Circuit

There are three types of audio muting:

MU1 : Mutes the main band momentarily during memory scan etc. And during transmission.

MU2 : Mutes the subband when the CTCSS key is pressed.

MU3 : Operates when the MUTE key is pressed on the front panel.

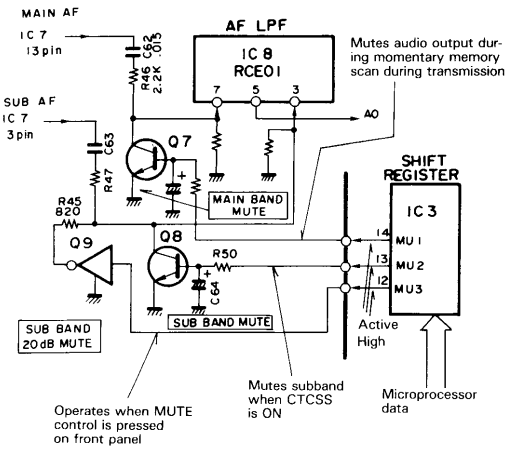

Fig. 8 Mute Circuit

CIRCUIT DESCRIPTION

Transmitter Circuits

• General

Except for the microphone amplifier and APC (Automatic Power Control) circuits, the transmitting circuits are independent.

• Modulation Circuit

The audio signal from the microphone is fed to three operational amplifiers which perform preemphasis, amplification, and limiting, and form a splatter filter that removes unwanted high-frequency components.

The modulation circuit directly modulates the VCO (Voltage control oscillator) for the 144 MHz and 430 MHz bands by using a varicap. (**See Fig. 9.**)

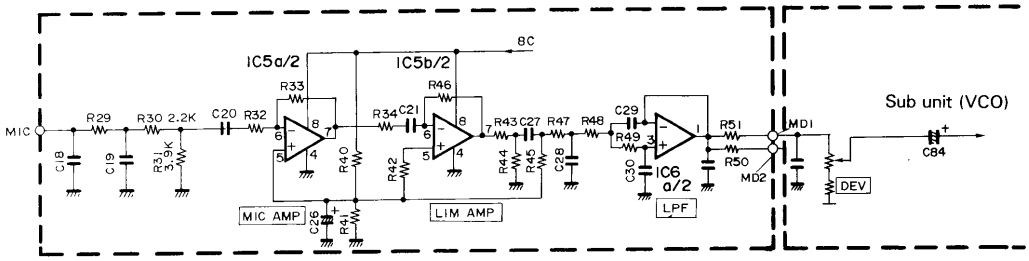

Control Unit (X53-3130-XX)

TX-RX Unit (144 MHz and 430 MHz)

Fig. 9 Modulation Circuit

• Preamplifier Stage Circuit

A three-stage linear amplifier is used in both the 144 MHz and 430 MHz bands. Due to its wideband design, this linear amplifier provides stable drive output without adjustment.

• Power Amplifier Circuit

The drive signal is fed to the power modules and amplified to the required levels. It then passes through the TX/RX switching diode and a filter and is transmitted via the antenna.

Item	Symbol	Tc (°C)	Unit	Conditions	Rating	
					M57726	M57788M
Operating voltage	Vcc	25	V		17	17
Current consumption	Icc	25	A		14	14
Input power	Pin	25	W	$Z_G = Z_L = 50\ \Omega$	0.6	0.6 ($V_{CC1} \geq 13.8$ V)
Output power	Po	25	W	$Z_G = Z_L = 50\ \Omega$	55	55
Operating case temperature	Tc (op)		°C		−30 ~ +110	−30 ~ +110
Storage temperature	Tstg		°C		−40 ~ +110	−40 ~ +110

Table 7 Maximum Ratings of Power Modules

• APC and SWR (Standing Wave Retio) Protection Circuits

The APC (automatic transmit output control) circuit and protection circuit have independent detectors in both bands. The control circuit is a common hybrid IC.

The APC detects the output from the power module and feeds the result to the hybrid IC. The SWR protection circuit extracts a portion of the reflected wave generated by antenna mismatching at the CM (Capacitance Matching) coupler, detects it, and feeds the result to the hybrid IC.

The hybrid IC controls the power transistor Q5 : 2SD1406 (Y) in the drive stage, controls the drive transistor and the second pin of the power module, and thus varies the transmitter output.

CIRCUIT DESCRIPTION

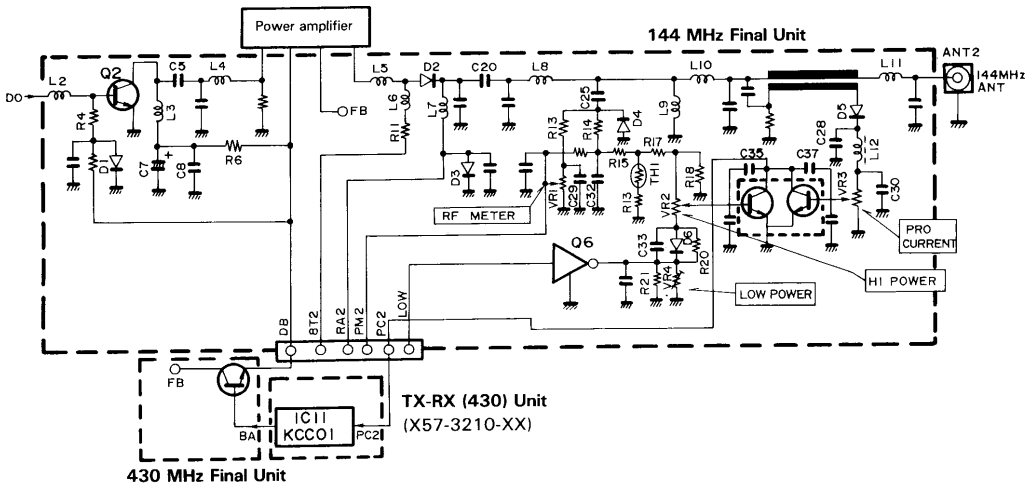

Fig. 10 APC and SWR Protection Circuits

PLL Synthesizer

Fig. 12 is a block diagram of the PLL and VCO sections of the 144 MHz and 430 MHz circuits. A feature of the PLL system in the TM-721A/E is that there are independent subunits for the 144 MHz and 430 MHz bands, each consisting of an upper VCO section and a lower PLL section. Both sections are enclosed in a sturdy case that shields them from external signals.

To provide 5 kHz, 10 kHz, 12.5 kHz, 20 kHz, and 25 kHz steps, the 12.8 MHz frequency of the reference oscillator in both the 144 MHz and 430 MHz bands is divided by 2048 and 2056 according to the step count to yield frequencies of 6.25 kHz and 5 kHz. Each VCO oscillates directly at the target frequency. After single-stage amplification, the frequency is applied to a pulse-swallow PLL IC which divides it, performs phase comparison, and locks the frequency.

The PLL system for the 144 MHz band locks without switching between TX and RX. The lock-up time of the PLL is shortened by using pin 10 of the PLL IC (M54959FP), which is Low in TX, to turn off the low-pass filter Q1 and Q2 in Fig. 13, only at the instant when the set is switched to TX, thus shortening. The time it takes the transmitter to lock.

The PLL system for the 430 MHz band locks on a single VCO, with band switching for TX and RX performed inside the VCO.

• 8T2 (Transmit 8V) and Unlock Circuit

Dueing receive, 0.7 V desional is applied to the base of Q8 which turns Q8 on, Q7 off, and Q10 off, so no voltage is output at the collector (8T2) (TX +8 V) of Q10.

When the PTT (Push-to Talk) switch is depressed, serial data is sent from the microprocessor to IC1 (the phase-locked loop) causing pin 10 of IC1 to go Low. This switches Q8 off, Q7 on, and Q10 on, so that 8 V is applied to 8T2. (In transmission, 8 V is applied to 8T2 from 8C.)

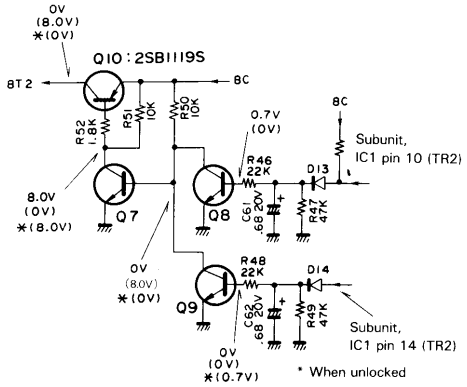

Fig. 11 8T2 (Transmit 8 V) and Transmit Unlock Circuits

CIRCUIT DESCRIPTION

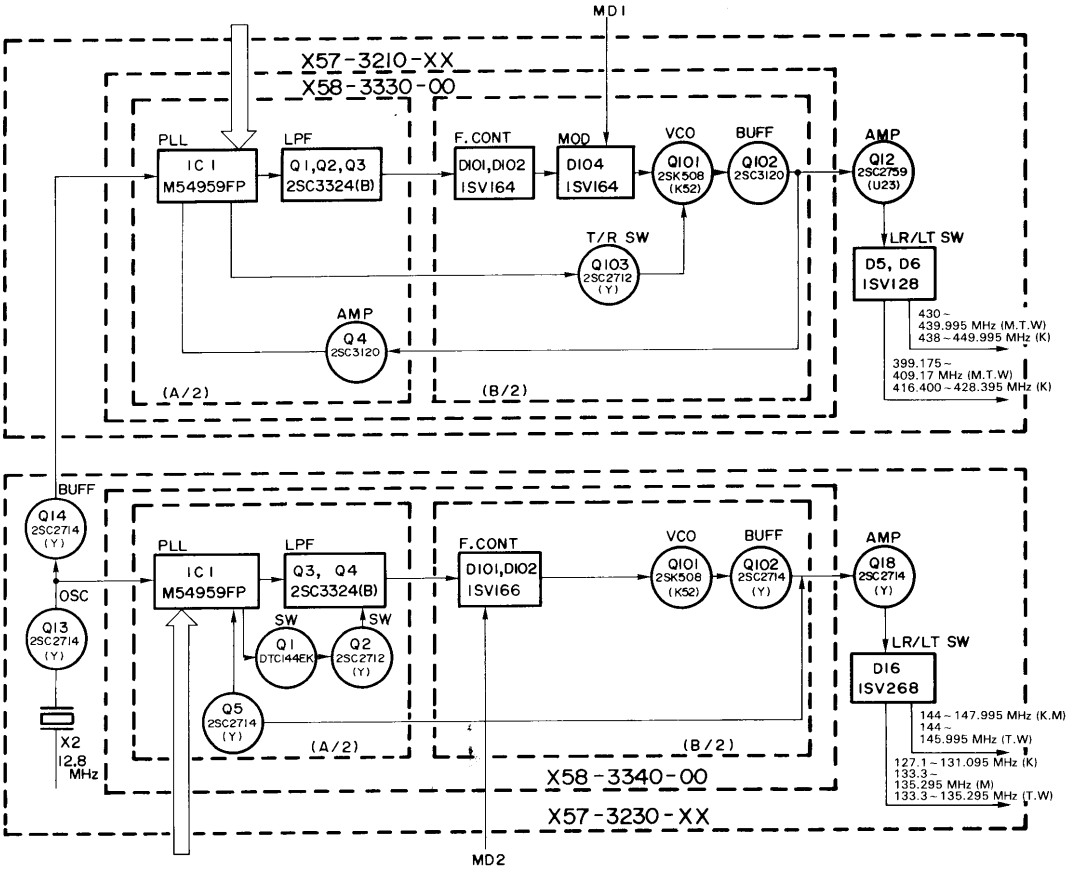

Fig. 12 PLL and VCO Block Diagram

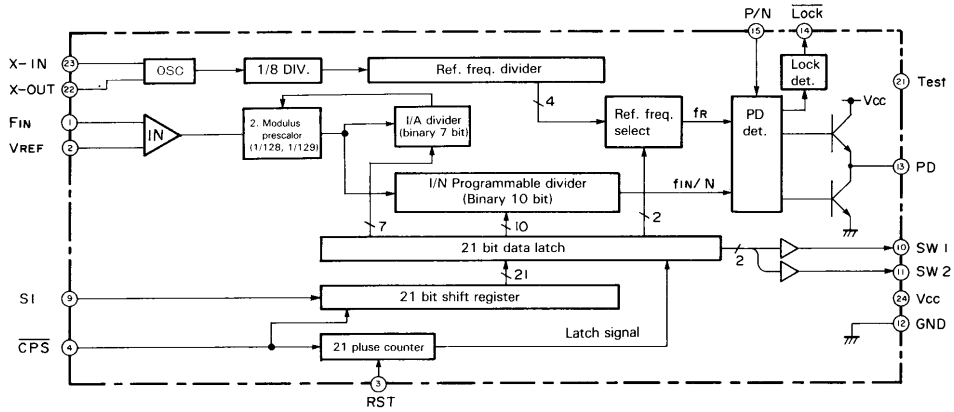

Fig. 13 M54959 Pulse Swallow Control Circuit

CIRCUIT DESCRIPTION

The unlock circuit operates only in the transmitter circuit. A description of the 430 MHz unlock circuit follows. Q9 is the PLL unlock switching transistor. Normally the base of Q9 is Low (0 V) and the collector of Q9 is High (8 V).
When the PLL unlocks 0.7 V dc is applied to the base of Q9, Turning Q9 on forcing the collector to 0 V (Low). This switches Q7 off. When the PLL unlocks (during transmission), the collector of Q7 goes to 8 V (instead of the normal 0 V) and Q10 turns off. Therefore the 8T switching transistor Q10 turns off and the transmit bias voltage goes dead. This prevents transmitter output when the PLL is unlocked.

• 8R (Receive 8 V) Stop Circuit

In receiving, the base of Q12 receives an 5 V dcsignal that turns Q12 on (so the collector of Q12 goes to 0 V). Q11 then turns on and provides 8 V at its collector. (In receiving, 8 V is supplied from 8C (Common +8 V) to 8R.)
During transmit, serial data from the microprocessor is passed thru shift register IC4. The output from IC4 at pin 11 goes Low. Q12 therefore turns off (its collector voltage going to 8 V), Q11 turns off, and no 8R output is provided from the collector of Q11.
The PLL IC (M54959FP) can be controlled for its two reference division ratios and single comparison division ratio. The pulse-swallow PLL circuit is contained on a single chip and consists of a built-in dual-modulus (1/128 and 1/129) prescaler.
The switch function (pin 10) of the PLL IC controls the 8T1 (TX +8 V (430 MHz)) and 8T2 (TX +8 V (144 MHz)) lines.

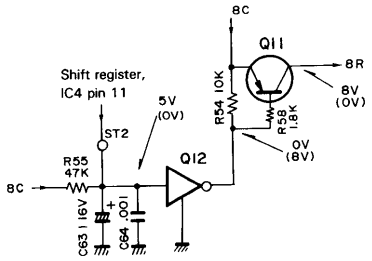

Fig. 14 8R Stop Circuit

In the 144 MHz band, the relation ship between F_{VCO1} and the division ratios is:

$F_{VCO1} = (144 - 10.7) = \{(n1 \times 128) + A1\} \times F_{OSC} + R$

F_{VCO1} : Output frequency of 144 MHz-band VCO
n1 : Value to which binary 10-bit programmable counter is set
A1 : Value to which binary 7-bit programmable counter is set
F_{OSC} : Reference oscillator frequency, 12.8 MHz
R : Value to which binary 14-bit programmable counter is set
R = 2560 for 5 kHz, 10 kHz, 20 kHz, and 25 kHz steps
R = 2048 for 12.5 kHz steps

If n1 = 208, A1 = 36, then with 5 kHz, 10 kHz, 20 kHz, or 25 kHz steps:

$\therefore F_{VCO1} = \{(208 \times 128) + 36\} \times 12800 \div 2560$
$= (26624 + 36) \times 5$
$= 133300 = 133.3$ MHz

In the 430 MHz band the relation between F_{VCO2} (RX) and the division ratios is:

$F_{VCO2} = (430 - 30.825) = \{(n2 \times 128) + A2\} \times F_{OSC} \div R$

F_{VCO2}: Output frequency of 430 MHz-band VCO
R and F_{OSC}: Same step frequencies as in the 144 MHz band
In this case n2 = 623 and A2 = 91, so:

$\therefore F_{VCO2} = \{(623 \times 128) + 91\} \times 12800 \div 2560$
$= (79744 + 91) \times 5$
$= 399175 = 399.175$ MHz

CIRCUIT DESCRIPTION

Digital Control Section

• General

The digital control section contains a single microprocessor (CPU) that controls all transceiver functions. As shown in the block diagram in **Fig. 15**, it also includes the key, switch, and rotary encoder input circuits, display circuit, reset and backup circuits, and tone output circuit.

Table 8 lists the pin functions of IC103.

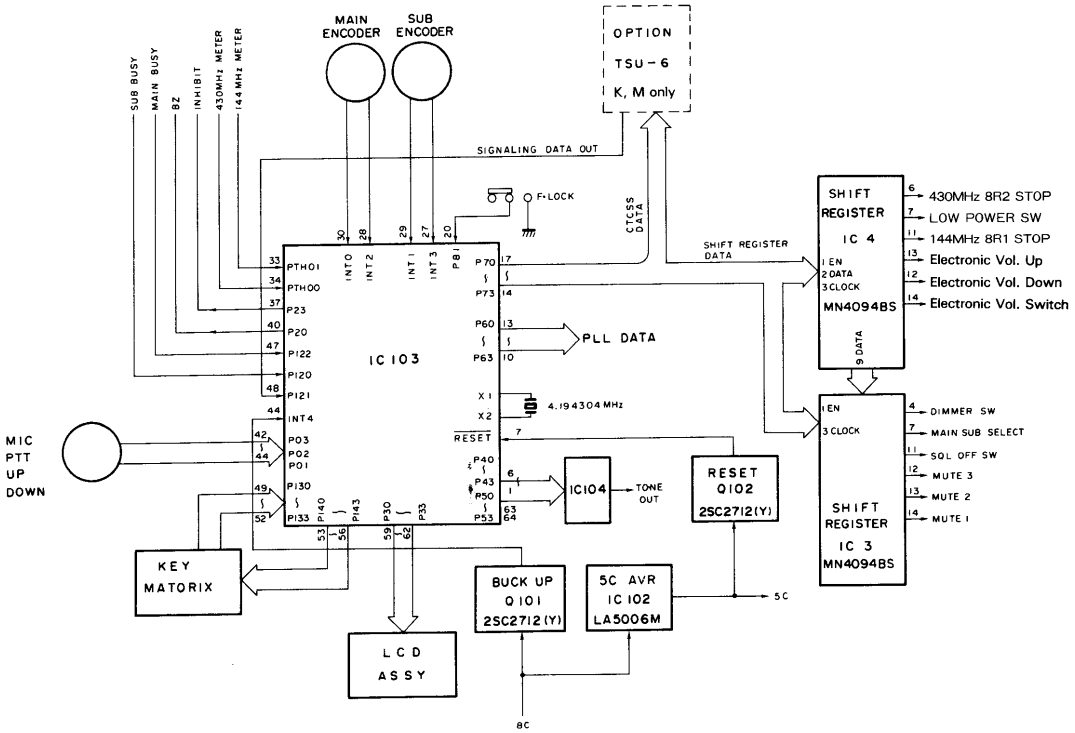

Fig. 15 Control Section Block Diagram

CIRCUIT DESCRIPTION

Pin No.	Name	I/O	Logic	Function	Pin No.	Name	I/O	Logic	Function
1	P41	O	–	D-A converter digital output	33	PTH01	I	–	144 MHz S/RF meter analog input
2	P40	O	–		34	PTH00	I	–	430 MHz S/RF meter analog input
3	P53	O	–		35	T11	–	L	Not connected
4	P52	O	–		36	T10	–	L	
5	P51	O	–		37	P23	O	L	Output during single operation
6	P50	O	–		38	P22	O	–	Not connected
7	RESET	I	L	Reset input	39	P21	O	–	Not connected
8	X2	–	–	4.194304 MHz crystal oscillator	40	P20	O	–	Beep tone generator
9	X1	–	–		41	P03/S1	I/I	L/–	Microphone DOWN switch input/serial data input
10	P63	O	L	PLL IC (144 MHz) enable output	42	P02/S0	I/O	L/–	Microphone PTT switch input/serial data output
11	P62	O	L	PLL IC (430 MHz) enable output	43	P01/SCK	I/–	L/–	Microphone UP switch input/serial clock input/ output
12	P61	O	–	PLL IC data output	44	INT4	I	H	Backup detector input
13	P60	O	–	PLL IC clock output	45	P123	I	H	Remote control unit connection-detect input (Only when connected)
14	P73	O	H	CTCSS enable output	46	P122	I	L	Main band BUSY input
15	P72	O	H	Shift register enable output	47	P121	I	H	CTCSS tone count input
16	P71	O	–	Shift register and CTCSS (Continuous Tone Coded Squelch System) lock output	48	P120	I	L	Subband BUSY input
17	P70	O	–	Shift register and CTCSS data output	49	P133	I	L	Key input
18	P83	I	L	Not connected	50	P132	I	L	
19	P82	–	–		51	P131	I	L	
20	P81	I	L	LOCK switch input	52	P130	I	L	
21	P80	I	L	Not connected	53	P143	O	L	Key output
22	P93	I	H	Destination input	54	P142	O	L	
23	P92	I	H		55	P141	O	L	
24	P91	I	H		56	P140	O	L	
25	P90	I	L	Not connected	57	NC	–	–	
26	Vss	–	–	Ground (0 V)	58	VDD	–	–	Power pin (5 V)
27	INT3	I	–	Sub encoder data input	59	P33	O	–	LCD driver data output
28	INT2	I	–	Main encoder data input	60	P32	O	–	LCD driver clock output
29	INT1	I	–	Sub encoder clock input	61	P31	O		Sub LCD driver enable output
30	INT0	I	–	Main encoder clock input	62	P30	O		Main LCD driver enable output
31	PTH03	I	H	Not connected	63	P43	O	–	D-A converter digital output
32	PTH02	I	H		64	P42	O	–	

Table 8 μPD75108G-620-1B/μPD75108G-621-1B Pin Functions (Control Unit IC)

• **Key and Rotary Encoder Input Circuit**

Fig. 16 shows the key and rotary encoder input circuit. The keys on the front panel form a matrix which the microprocessor reads by scanning. Signals from the two rotary encoders (MAIN and SUB), the microswitches (PTT, UP, DOWN) and the F.LOCK switch are applied to the CPU directly.

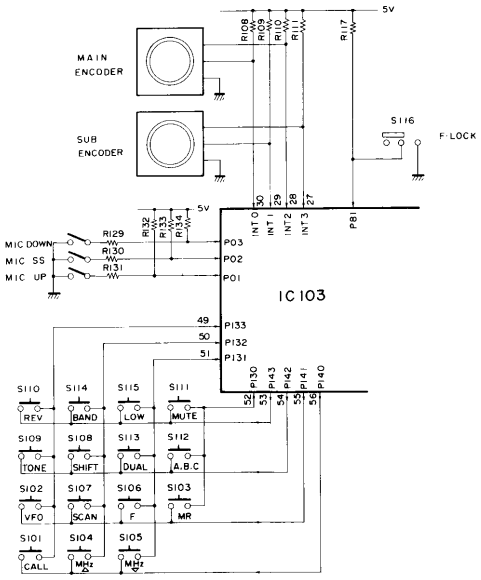

Fig. 16 Key, Switch, and Rotary Encoder Input Circuit

CIRCUIT DESCRIPTION

• Reset and Backup Circuits

Fig. 17 shows the reset and backup circuits.
When power is switched on, the reset circuit applies a Low pulse with a duration of approximately 3 mS to the RESET input of the microprocessor. This causes a power-on reset.
When power is switched off, the backup circuit detects the voltage drop on the 8 V line and applies a High signal to the INT4 input of the microprocessor. This places the microprocessor in the backup state.

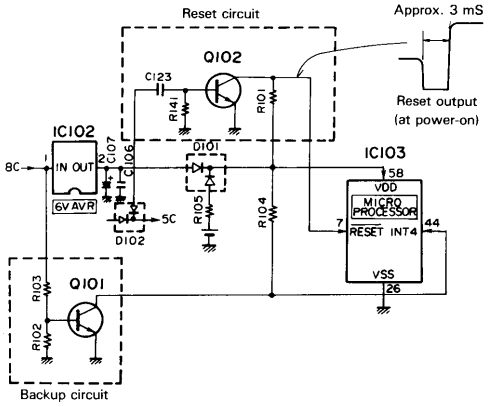

Fig. 17 Reset and Backup Circuits

• Display Circuit

Located on the LCD assembly, the display circuit consists of two LCD drivers, one for the main band and one for the subband, together with their supporting circuits and the liquid crystal display. (**See Fig. 18.**) The LCD is driven dynamically with a 50% duty cycle. The data to be displayed is sent as serial data to the LCD from pins P30 to P33 of the microprocessor.
In single operation, the microprocessor sends the subband LCD driver an inhibit signal to suppress the subband display.

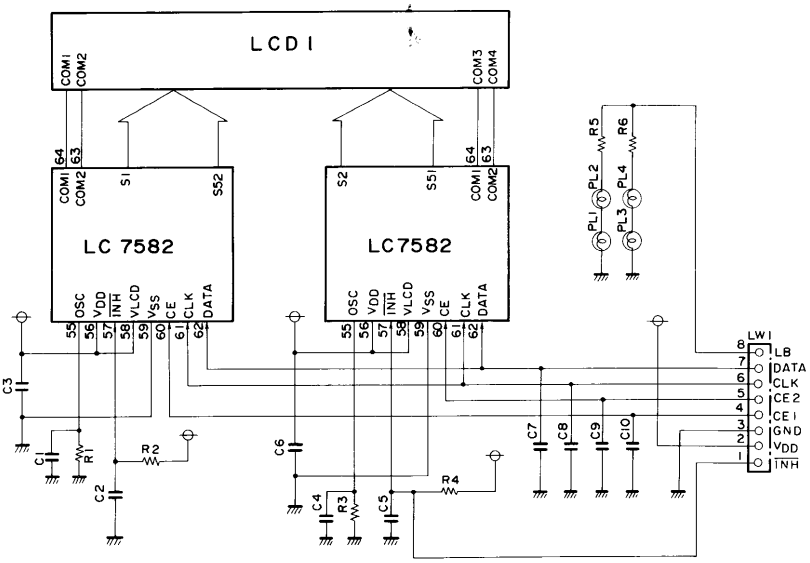

Fig. 18 LCD Assembly (B38-0306-05)

CIRCUIT DESCRIPTION

• PLL Data Output

Pins P60 (CP (PLL Clock)), P61 (DP (DLL Data)), P62 (EP1 (430 MHz PLL Enable)), and P63 (EP2 (144 MHz PLL Enable)) of the microprocessor supply the PLL data.

Fig. 19 indicates the bit structure of the data.

Fig. 20 indicates the timing of the data transfer.

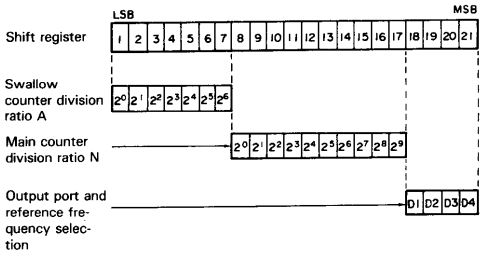

Fig. 19 PLL Data Structure

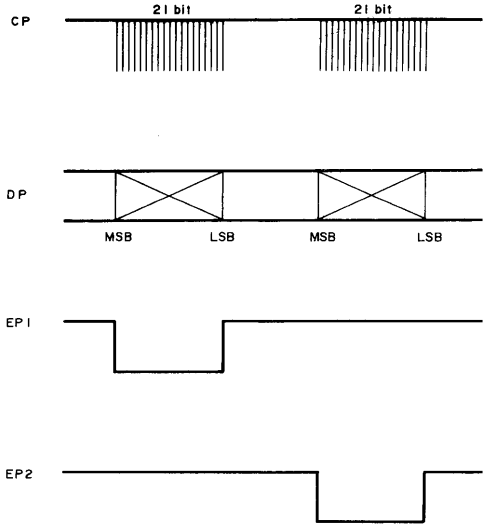

Fig. 20 PLL Data Transfer Timing

144 MHz Band

The 21 data bits are obtained as follows:

1. Division data A and N (17 bits)

F (displayed value − 10.7 MHz in RX)

$= \{(N \times 128) + A\} \times 12.8\ \text{MHz} \div \text{ref}$

N: 10-bit binary value; division ratio of main counter

A: 7-bit binary value; division ratio of swallow counter

2. Reference frequency (ref) selection (2 bits)

Data		Phase reference frequency	
D1	D2		
L	L	5 kHz	With 5 kHz, 10 kHz, 20 kHz, or 25 kHz steps
H	L	6.25 kHz	With 12.5 kHz steps

3. Switch selection (2 bits)

Data		Output port			
D3	D4	SW1	SW2		
H	H	H	H	At RX	With ACC OFF
L	H	L	H	At TX	With ACC OFF
H	L	H	L	At RX	With ACC ON
L	H	L	H	At TX	With ACC ON

430 MHz Band

The 21 data bits are derived as follows:

1. Division data A and N (17 bits)

F (displayed value − 30.825 MHz in RX)

$= \{(N \times 128) + A\} \times 12.8\ \text{MHz} \div \text{ref}$

N: 10-bit binary value; division ratio of main counter

A: 7-bit binary value; division ratio of swallow counter

2. Reference frequency (ref) selection (2 bits)

Data		Phase reference frequency	
D1	D2		
L	L	5 kHz	With 5 kHz, 10 kHz, 20 kHz, or 25 kHz steps
H	L	6.25 kHz	With 12.5 kHz steps

3. Switch selection (2 bits)

Data		Output port		
D3	D4	SW1	SW2	
H	H	H	H	At RX
L	H	L	H	At TX

CIRCUIT DESCRIPTION

• Shift Register Circuit

By shifting serial data from the microprocessors, the two shift registers (IC3 and IC4) perform the following control functions:

- Main and sub standby control
- Muting control
- Low power control
- Electronic volume control, UP/DOWN switching
- Dimmer control
- Main/sub select
- Squelch off control

• Dimmer Control Circuit

Fig. 21 shows the AVR circuit in the LB. The LB (Lamp +B) voltage is lowered by switching the reference voltage zener diodes.

Normally the base voltage of Q2 is held to approximately 11 V by the 11 V zener diode D1:02CZ11Y, and the pilot lamp voltage LB is approximately 10.5 V. When the DIM switch is set to the ON position, 5 V dc is obtained from pin 4 of shift register IC3, causing Q3 DCT 114EK to go from High to Low, thereby connecting zener diode D2:02Z8ZY in parallel to D1.

Therefore, the base voltage of Q2 is held to the zener voltage (8.2 V) of D2, resulting in a drop to approximately 8.5 V. The pilot lamp voltage LB then drops to approximately 7.8 V and the pilot lamp dims.

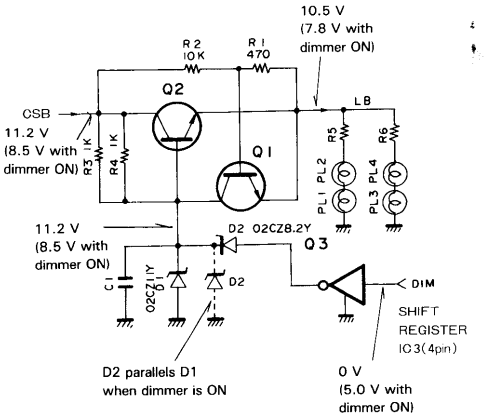

Fig. 21 LB (Lamp +B) AVR Circuit

• Squelch-Off Circuit (When RC-10 is Connected)

Fig. 22 shows the squelch-off circuit. This circuit opens the squelch gate for the main band from the remote controller when the remote control unit is used.

When the RC-10 is connected, it communicates with the microprocessor in the set via pins 2, 3, and 4 of the microphone connector. When the RC-10 is connected, the exchange of data with the microprocessor causes pin 11 of shift register IC3 to provide a High switch control signal, so transistor Q9 goes Low and the SQL pin is dropped to ground level.

The result is that the squelch VR for the main band is left open. Part of the main noise amplifier output is fed from the RD (Remote Data) pin to pin 6 of the microphone connector, and from there to the RC-10.

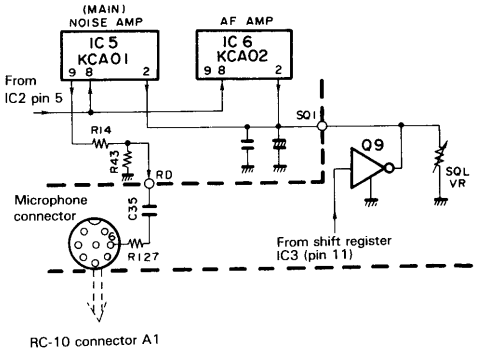

Fig. 22 Squelch Off Circuit

• Beep Tone

The microprocessor generates a beep tone of approximately 1.2 kHz at pin P20. This signal is reshaped into a rectangular wave by an C, R wave-shaping circuit.

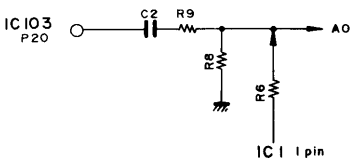

Fig. 23

CIRCUIT DESCRIPTION

• Tone Output

Signals from pins P40 to P43 and P50 to P53 of the microprocessor are fed to a ladder resistor network (IC104) which performs D-A conversion and provides 38 signals ranging from 67.0 to 250.3.

Fig. 24 shows the internal structure of IC104.

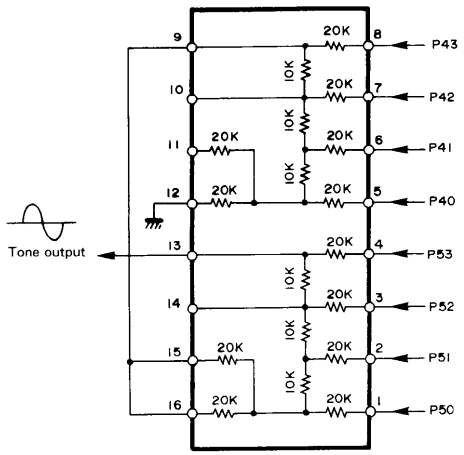

Fig. 24 Ladder Network: Internal Structure of KRR-C001 (Control Unit IC104)

• S meter and RF meter input

The S meter and RF meter voltages are coupled separately for the main band and subband and are provided as the M1 and M2 inputs to the PTH00 and PTH01 pins of the microprocessor.

The input voltage is converted internally to a 4-bit digital value (16 levels) and sent to the display.

• Busy Input

BUSY signals are supplied separately to the microprocessor for the main band and subband. If squelch is on, the microprocessor receives a Low input when the received signal is present, and lights the BUSY indicator.

• Input and Output for CTCSS Unit (Option)

The microprocessor provides data for the CTCSS unit from pins P70, P71, and P73. This data specifies the CTCSS tone frequency and CTCSS unit on/off information.

When a tone is detected from the CTCSS unit, the microprocessor receives a High input at P121 and opens the squelch gate.

• Input and Output for Remote Control Unit (RC-10, Option)

When the remote control unit is connected, the microprocessor receives a High input at P123 and switches the following pin functions:

P03 → SI : Serial data input pin
P02 → SO : Serial data output pin
P01 → SCK : Serial clock input/output pin

Data transfer between the microprocessor in the set and the microprocessor in the remote control unit takes place over these lines.

DESCRIPTION OF ELEMENTS

Final Unit (X45-3180-11:K, -21:M, -51:T, W)

Components	Use/Function	Operation/Condition/Compatibility
Q1	Power amplifier	144 MHz M57726:52 W or more (with APC set OFF)
Q2	Transmitter driver	144 MHz DO2 pin:0.12 W, Q2's collector:0.55 W (with APC OFF for M57726)
Q3	144 MHz protection, APC control	Power control with VR2, Protection adjustment wqith VR3
Q4	Power amplifier	430 MHz M57788:42 W or more (with APC OFF)
Q5	Drive stage + B control	
Q6	Low Power switch	Turns OFF when operating with 144 MHz Low Power
D1	Q2 idling	Anode voltage:0.6 V (in transmission)
D2, 3	Transmission/Reception select	UM940 for 144 MHz
D4	144 MHz APC, RF meter detection	RF meter adjustment with VR1, APC adjustment with VR2, 144 MHz
D5	144 MHz reflected wave detection	Adjust with VR3, 15 W:ANT is open
D7, 8	430 MHz APC, RF meter detection	UM401
D9	430 MHz APC, RF meter detection	Adjust with VR 7 on 430 MHz TX-RX unit, Adjust with VR 5 on 430 MHz TX-RX unit
D10	430 MHz reflected wave detection	Adjust VR4 on 430 MHz TX-RX unit
D11	Relay surge absorption	
D12	Power supply reverse connection protection	

Control Unit (X53-3130-11:K, -21:M, -51:T, -61:W)

Components	Use/Function	Operation/Condition/Compatibility
IC1	Electronic volume (IC2) select 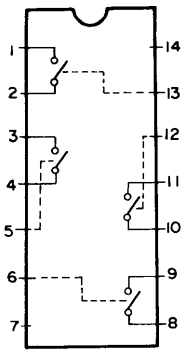 	**In normal Operation** ⑤ goes high, ⑫⑬ goes low level Between ③ and ④ turns ON Between ① and ②, between ⑩ and ⑪ turn OFF **Remote operated condition with RC-10** ⑤ goes high, ⑫⑬ goes low level Between ③ and ④ turns ON Between ① and ②, between ⑩ and ⑪ turns OFF
IC2	Electronic volume control	② Output ⑦ Input ⑧ Initial pin, "L" level volume step 6 ⑨ "L" level volume up ⑪ "L" level volume down

DESCRIPTION OF ELEMENTS

Components	Use/Function	Operation/Condition/Compatibility
IC3	Shift register	① Enable input ② Data input ③ Clock input ④ At high level in DIM mode ⑦ Band select output Goes low when main 430 MHz band ⑪ Squelch switch Goes high when squelch is turned OFF with RC-10 ⑫ Goes high when ⑭ mute output is activated ⑫ Goes high in memory scan, momentarily on transmission ⑬ Goes high when sub band CTCSS is ON ⑭ Goes high when MUTE key on the front panel is engaged
IC4	Shift register	① Enable input ② Data input ③ Clock input ⑥ Stops 430 MHz band 8R. Goes high on reception mode. ⑦ LOW power switch output. Goes high when LOW power is ON. ⑨ Data output to IC3 ⑪ Stops 144 MHz band 8R. Goes high on reception mode. ⑫ Electronic volume UP output Goes low in UP operation. ⑬ Electronic volume DOWN output Goes low in DOWN operation. ⑭ Electronic volume select output Goes high when electronic volume (IC2) is engaged
IC5	Microphone amp	⑥ MIC (microphone) input ⑦ Output 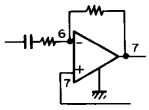
IC6	Limiting amp (1/2) Low pass filter (2/2)	⑥ Input, ⑦ Output ① Output 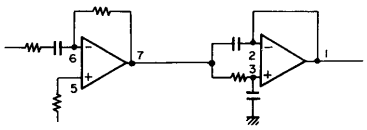
IC7	8 V AVR 3-pin regulator	Input 13.5 V, output 8 V
IC103	Microcomputer	refer to "Circuit Description"
IC104	DA conversion for tone	① – ⑧ Input ⑬ Output
Q1	IR AVR protection	When AVR output is short-circuited 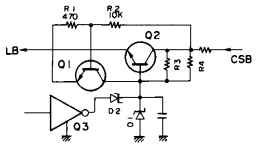
Q2	LB AVR	
Q3	Dimmer switch	Turns ON when dimmer is engaged
Q4	Electronic volume select switch	Turns ON when operated with RC-10 remote control. 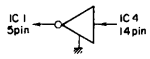

DESCRIPTION OF ELEMENTS

Components	Use/Function	Operation/Condition/Compatibility
Q5	Electronic volume down switch	Turns ON when electronic volume down operation 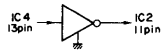
Q6	Electronic volume up switch	Turns ON when electronic volume up operation 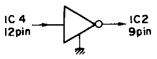
Q7	Balance volume switch	Turns ON in single operation
Q8	Balance volume switch	Turns OFF in single operation 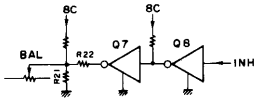
Q9	Squelch OFF switch	Turns ON when squelch function is turned OFF with RC-10 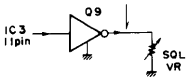
Q10, 11	Electronic volume select switch	Turns ON when operated with RC-10 remote control 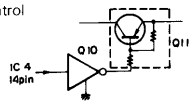
Q12	Buffer amp for tone	
Q101	Backup switch	Turns OFF when the 5 V line shows below the rated value when the power is turned ON/OFF. 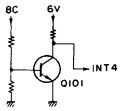
Q102	Reset switch	Turns ON during 3 ms when the power is turned ON. Normally OFF. 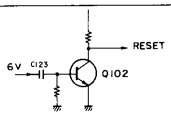
D1	LB AVR reference	11 V Zener diode
D2	LB AVR reference in dimmer mode	8.2 V Zener diode
D3	Voltage drop	
D101	Reverse current protection lithium battery select	Lithium battery turns ON when the power is turned OFF.
D102	Reverse current protection, microcomputer protection	
D103	Reverse current protection	
D104	Microcomputer protection	

DESCRIPTION OF ELEMENTS

435 MHz Transmission/Reception Unit (X57-3210-11:K, -01:M,T,W)

Components	Use/Function	Operation/Condition/Compatibility
IC1	2nd local oscillator, mixer IF amplifier, detector	Operation in reception ⑯ 2nd IF input 30.825 MHz ①② 2nd local oscillator 30.37 MHz ⑨ Detector output
IC2	Band select switch	③ At low level: Input → output → ③ At high level: Input → output →
IC3	Sub band: Noise amplifier, detector, SDT buffer	⑧ Detect signal input ⑨ SDT output ② Noise detect voltage output (DC)
IC5	Main band: Noise amplifier, detector, RD buffer	⑧ Detect signal input ⑨ RD output ② Noise detect voltage output (DC)
IC4, 6 IC4 sub, IC6 main	SQL switch, AF amp	② At low level: AF output is ON low level ② At high level: AF output is OFF high level
IC7	Electronic volume balance	⑧ When 8 V: AF volume MAX 0 V: AF volume Min. 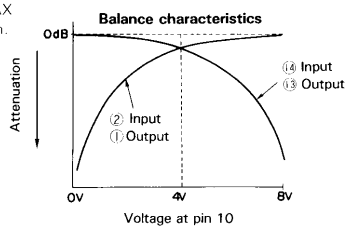
IC8	AF IPF Main/sub mix	Input ⑦, ③ are mixed and to output
IC9	PLL 8 V AVR	3-pin regulator 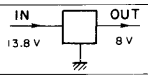
IC10	8T, 8R select	③ high level, ② low level, ④ +8 V ③ low level, ② low level, ④ 0 V ③ high level, ② low level, ④ 0 V ③ low level, ② high level, ④ 0 V 8 R ⑨ high level, ⑧ 8 V ⑨ low level, ⑧ 0 V
IC11	APC	

DESCRIPTION OF ELEMENTS

Components	Use/Function	Operation/Condition/Compatibility
Q1, 2	Radio-frequency amplifier	Operation in reception
Q3	First mixer	Operation in correction 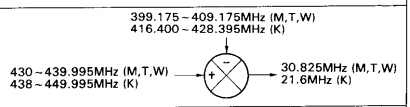
Q4	First IF amplifier	Operation in reception 30.025 MHz 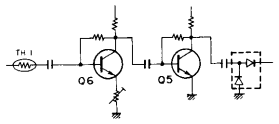
Q5, 6	S-meter amplifier	
Q7	Main band mute	Main band mute when ON 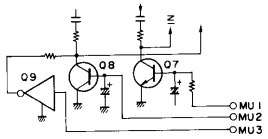
Q8	Sub band mute	Sub band mute when ON
Q9	Sub band mute	Sub band mute by 20 dB when ON
Q10	PLL 8 V ripple filter	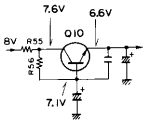
Q11	PLL 5 V AVR	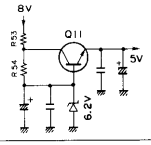
Q12	PLL output amplifier	On reception: 399.175—409.175 MHz (M,T,W), 416.400—428.395 MHz (K) On transmission: 430—440 MHz (M,T,W), 440—450 MHz (K)
Q13	PLL modulation input mute	On reception: When ON, turns C13 ON by 8R, and grounds the mic line. 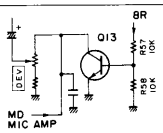
Q14	Low Power switch	430 MHz band: Turns OFF when LOW POWER is activated. 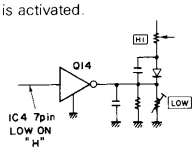
Q15, 16	Radio-frequency amplifier	Operation in reception 430—440 MHz, 440—450 MHz
Q17	Transmission driver	Operation in reception 430—440 MHz, 440—450 MHz
D1	Reverse current protection	
D2	S-meter detection	
D3	Reverse current protection	
D4	PLL 5 V AVR reference	0.2 V Zener diode
D5	PLL output switch	Turns ON on reception
D6	PLL output switch	Turns ON on transmission

DESCRIPTION OF ELEMENTS

Components	Use/Function	Operation/Condition/Compatibility
D7	Reverse current protection	
D8	Reverse current protection	
D9	POWER control temperature compensation	
D10	Reverse current protection	
D11	Limitter	
D12	Idling of Q16	
D13	Idling of Q17	

144 MHz Transmission/Reception Unit (X57-3230-11:K, -21:M, T, W)

Components	Use/Function	Operation/Condition/Compatibility
IC1	Second local oscillator, mixer PLL 8 V ripple filter	Operation in reception ⑯ First IF input 10.7 MHz (M,T,W), 16.9 MHz (K) ①② Second local oscillator 10.240 MHz (M,T,W), 17.355 MHz (K) ⑨ Detector output
IC2	AF amplifier	⑥ AF IN ① AF OUT
IC3	DC-DC converter	① DC IN 8 V ② DC OUT 24 V
Q1	Radio-frequency amplifier	Operation in reception
Q2	First mixer	Operation in reception 127.1~131.095MHz (K) 131.1~137.295MHz (M) 133.3~135.295MHz (T,W) 144~147.995MHz (K,M) 144~145.995MHz (T,W) 16.9MHz (K) 10.7MHz (M,T,W)
Q3	First IF amplifier	Operation in reception 10.7 MHz
Q4, 5	S-meter amplifier	
Q6	IC2 mute	Turns ON during approx. 300 ms when power is turned ON. In normal operation, it is OFF. IC2 7pin C60 Q6
Q7	BT switching control	Turns ON in transmission
Q8	BT switching control	Turns OFF in reception
Q9	BT switching control	PLL lock OFF
Q10	BT switching control	Turns ON in transmission Q10 BT2 BC (8.0V) *0V R52 R51 R50 0.7V (0V) Q8 R46 D13 8.0V (0V) *8.0V Q7 0V *(0.7V) When unlocked D14 0V (8V) *(0V) Q9

DESCRIPTION OF ELEMENTS

Components	Use/Function	Operation/Condition/Compatibility
Q11 Q12	8R switching 8R switching control	Turns ON in transmission Turns ON in reception
Q13	PLL reference oscillator	12.8 MHz
Q14	Buffer	12.8 MHz
Q15	PLL 5 V AVR	12.8 MHz
Q17	PLL modulation input mute	Turns ON in reception When receiving, turns Q17 ON, and grounds the mic line
Q18	PLL output amplifier	On reception 127.1 ~ 131.095 MHz (K), 133.1 ~ 137.295 MHz (M), 133.3 ~ 135.295 MHz (T,W) On transmit 144 ~ 147.995 MHz (K), 144 ~ 145.995 MHz (M,T,W)
Q19, 20	Radio-frequency amplifier	Activates when transmitting
D1	Reverse current protection	
D4 ~ 8	Varicap tuning	
D9	Reverse current protection	
D10	S-meter detection	
D11	Reverse current protection	
D12	Limitter	
D13, 14	Reverse current protection	
D15	PLL 5 V AVR reference	
D16	PLL output switch	
D17	Q20 idling	

DESCRIPTION OF ELEMENTS

144 MHz VCO unit (X58-3340-00)

Components	Use/Function	Operation/Condition/Compatibility
IC1	PLL	ⓘ VCO input When receiving: 127.1 ~ 131.095 MHz (K) 133.1 ~ 137.295 MHz (M) 133.3 ~ 135.295 MHz (T,W) When transmitting: 144 ~ 147.995 MHz (K,M) 144 ~ 145.995 MHz (T,W) ⑩ At low level when transmitting ⑭ At high level when unlocked ㉓ Reference oscillator input 12.8 MHz
Q1	Transmission select switch	Turns OFF when transmitting
Q2	Transmission select switch	Turns ON at the moment when transmission starts
Q3, 4	LPF	
Q5	VCO output amplifier	When receiving: 127.1 ~ 131.095 MHz (K) 133.1 ~ 137.295 MHz (M) 133.3 ~ 135.295 MHz (T,W) When transmitting: 144 ~ 147.995 MHz (K,M) 144 ~ 145.995 MHz (T,W)
Q101	VCO	When receiving: 127.1 ~ 131.095 MHz (K) 133.1 ~ 137.295 MHz (M) 133.3 ~ 135.295 MHz (T,W) When transmitting: 144 ~ 147.995 MHz (K,M) 144 ~ 145.995 MHz (T,W)
Q102	VCO output buffer	When receiving: 127.1 ~ 131.095 MHz (K) 133.1 ~ 137.295 MHz (M) 133.3 ~ 135.295 MHz (T,W) When transmitting: 144 ~ 147.995 MHz (K,M) 144 ~ 145.995 MHz (T,W)
D101	Varicap for transmission modulation	
D102	VCO voltage control	

430 MHz VCO Unit (X58-3330-00)

Components	Use/Function	Operation/Condition/Compatibility
IC1	PLL	ⓘ VCO input When receiving 416.400 ~ 428.395 MHz (K) 399.175 ~ 409.170 MHz (M,T,W) When transmitting 438 ~ 449.995 MHz (K) 430 ~ 439.995 MHz (M,T,W) ⑩ At low level when transmitting ⑭ At high level when unlocked ㉓ Reference oscillator input 12.8 MHz
Q1 ~ 3	LPF	
Q4	VCO output buffer	When receiving 416.400 ~ 428.395 MHz (K) 399.175 ~ 409.170 MHz (M,T,W) When transmitting 438 ~ 449.995 MHz (K) 430 ~ 439.995 MHz (M,T,W)
Q101	VCO	When receiving 416.400 ~ 428.395 MHz (K) 399.175 ~ 409.170 MHz (M,T,W) When transmitting 438 ~ 449.995 MHz (K) 430 ~ 439.995 MHz (M,T,W)
Q102	VCO output buffer	When receiving 416.400 ~ 428.395 MHz (K) 399.175 ~ 409.170 MHz (M,T,W) When transmitting 438 ~ 449.995 MHz (K) 430 ~ 439.995 MHz (M,T,W)
Q103	Transmission select switch	Turns OFF during transmitting
D101, 102	VCO voltage control	
D103	Transmission select switch	Turns OFF during transmitting
D104	Varicap for transmission modulation	

PARTS LIST

CAPACITORS CC 45 TH 1H 220 J
1 2 3 4 5 6

1 = Type ..... ceramic, electrolytic, etc.
2 = Shape .....round, square, etc.
3 = Temp. coefficient
4 = Voltage rating
5 = Value
6 = Tolerance

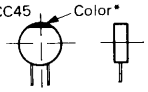

• **Capacitor value**

0 1 0 = 1pF
1 0 0 = 10pF
1 0 1 = 100pF
1 0 2 = 1000pF = 0.001μF
1 0 3 = 0.01μF
2 2 0 = 22pF
1st number | Multiplier
2nd number

• **Temperature Coefficient**

1st Word	C	L	P	R	S	T	U
Color•	Black	Red	Orange	Yellow	Green	Blue	Violet
ppm/°C	0	−80	−150	−220	−330	−470	−750

2nd Word	G	H	J	K	L
ppm/°C	± 30	± 60	± 120	± 250	± 500

Example CC45TH = −470 ± 60 ppm/°C

• **Tolerance**

Code	C	D	G	J	K	M	X	Z	P	No code
(%)	± 0.25	± 0.5	± 2	± 5	± 10	± 20	+ 40 −20	+ 80 −20	+ 100 −0	More than 10μF −10~ + 50; Less than 4.7μF −10~ + 75

Less than 10 pF

Code	B	C	D	F	G
(pF)	± 0.1	± 0.25	± 0.5	± 1	± 2

• **Rating voltage**

1st word \ 2nd word	A	B	C	D	E	F	G	H	J	K	V
0	1.0	1.25	1.6	2.0	2.5	3.15	4.0	5.0	6.3	8.0	–
1	10	12.5	16	20	25	31.5	40	50	63	80	35
2	100	125	160	200	250	315	400	500	630	800	–
3	1000	1250	1600	2000	2500	3150	4000	5000	6300	8000	–

• **Chip capacitors**

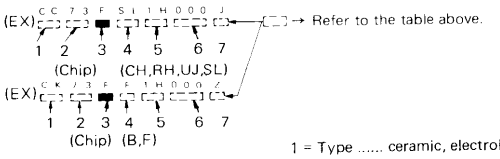

1 = Type ..... ceramic, electrolytic, etc.
2 = Shape ..... round, square, etc.
3 = Dimension
4 = Temp. coefficient
5 = Voltage rating
6 = Value
7 = Tolerance.

Dimension

Dimension code	L	W	T
Empty	5.6 ± 0.5	5.0 ± 0.5	Less than 2.0
E	3.2 ± 0.2	1.6 ± 0.2	Less than 1.25
F	2.0 ± 0.3	1.25 ± 0.2	Less than 1.25

Dimension

Dimension code	L	W	T	Wattage
E	3.2 ± 0.2	1.6 ± 0.2	0.57	2B
F	2.0 ± 0.3	1.25 ± 0.2	0.45	2A

RESISTORS

• **Chip resistor (Carbon)**

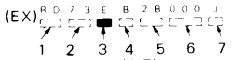

• **Carbon resistor (Normal type)**

Rating wattage

Cord	Wattage	Cord	Wattage	Cord	Wattage
2A	1 /10W	2E	1/ 4W	3A	1W
2B	1/ 8W	2H	1/ 2W	3D	2W
2C	1/ 6W				

Dimension

PARTS LIST

SEMICONDUCTOR

N : New parts

Item	Remarks	Parts NO.
Diode		1S1587
		1SS101
		1N60PSPA
		DSA3A1
		RLS73
		MI308
		UM9401
Chip vari-cap diode		1SV164
		1SV166
Chip diode		1SS128
		1SS181
		1SS184
		1SS196
		1SS226
		1SS268
		HSM88AS
Zenner diode		02CZ6.2(X, Y)
		02CZ8.2Y
		02CZ11Y
		02CZ4.3(X, Y)
Thermister		112-103-02
		112-501-02
Transistor		2SC2538-22-A
		2SC3326(A)
		2SC3357
		2SC3369
		2SC3419(Y)
		2SD1406(Y)
Chip TR		2SB1119S
		2SC2407(1)
		2SC2712(Y)
		2SC2714(Y)
		2SC2759(U23)
		2SC2954
		2SC3120
		2SC3324(B)
		2SC3369
		FMW1

Item	Remarks	Parts NO.
Digital TR		DTA114EK
		DTA143EK
		DTC114EK
		DTC114TK
		DTC114EK
		DTC124EK
Chip FET		2SK125
		2SK508(K52)
		2SK179(L)
		3SK184(S)
Power module		M57726
		M57788M
IC	N	KCA01
	N	KCA02
	N	KCC01
	N	KCE01
	N	KCS01
	N	KCS02
		KRR-C001
		LA5006M
		LC7532M
	N	M51523AL
		M54959FP
		MB3713
		MC3361D
		MN4066BS
		MN4094BS
		NJM4558M
		NJM78L08UA
		μPC78M08H
Microprossesor IC	N	75108G-620-1B
	N	75108G-621-1B

PARTS LIST

* New Parts
Parts without **Parts No.** are not supplied.
Les articles non mentionnes dans le **Parts No.** ne sont pas fournis.
Teile ohne **Parts No.** werden nicht gellefert.

Ref. No. 参照番号	Address 位置	New Parts 新	Parts No. 部品番号	Description 部品名／規格	Destination 仕向	Remarks 備考
			TM-721A/E			
1	1B	*	A01-1047-02	METALLIC CABINET(TOP)		
2	3A	*	A01-1048-02	METALLIC CABINET(BOTTOM)		
4	2C	*	A20-2648-03	PANEL	KM	
4	2C	*	A20-2651-03	PANEL	TW	
5	2B	*	A23-1499-04	REAR PANEL (MODEL NAME PLATE)		
-		*	A20-2652-02	PANEL ASSY	K	
-		*	A20-2653-02	PANEL ASSY	M	
-		*	A20-2654-02	PANEL ASSY	TW	
9	2C	*	B10-1108-03	FRONT GLASS	K	
9	2C	*	B10-1109-03	FRONT GLASS	M	
9	2C	*	B10-1110-03	FRONT GLASS	TW	
12	1E	*	B38-0306-05	DISPLAY ASSY		
13	2B	*	B40-3809-04	MODEL NAME PLATE	K	
13	2B	*	B40-3810-04	MODEL NAME PLATE	M	
13	2B	*	B40-3811-04	MODEL NAME PLATE	TW	
-		*	B11-0451-04	REFRACTOR (SMALL)		
-		*	B11-0452-02	REFRACTOR (LARGE)		
-		*	B30-0865-05	PILOT LAMP FOR LCD ASSY		
-			B46-0410-20	WARRANTY CARD (ACSY)	K	
-			B46-0419-00	WARRANTY CARD (ACSY)	W	
-		*	B50-8225-00	INSTRUCTION MANUAL		
		*	E30-2111-05	DC CORD ASSY		
		*	E31-3343-05	RIBBON CABLE (12 PIN)		
		*	E31-3344-05	CABLE WITE CONNECTOR(5P)		
		*	E31-3345-05	CABLE WITE CONNECTOR(6P)		
		*	E31-3346-05	CABLE WITE CONNECTOR(2P.SP)		
		*	E31-3347-05	CABLE WITE CONNECTOR(2P.DET)		
		*	E31-3348-05	CABLE WITE CONNECTOR(2P.SF)		
			F05-1031-05	FUSE (10A)		
			F05-2036-05	FUSE (20A FOR DC CORD)		
31	1D	*	F15-0660-04	SHADE (SLIDE)		
32	1D.1E	*	F15-0661-04	SHADE (SLIDE VR)		
33	1E		F20-0521-04	INSULATING PLATE(LITHUM BATT)		
34	1D		F29-0431-05	INSULATOR (SUB ENCODER)		
			G11-0623-04	SOFT TAPE (SUB-ENCODER)		
			G11-0624-04	SOFT TAPE (BAND KNOB)		
			G11-0625-04	SOFT TAPE (MAIN-ENCODER)		
			G13-0649-04	CUSHION (16X12)		
			G13-0855-04	CUSHION (FOR MIC)	MTW	
			G13-0871-04	CUSHION (LCD)		
37	1A.3A		G10-0630-04	FELT (CASE)		
38	2C		G02-0505-05	KNOB FITTING SPRING (AF)		
39	2C		G09-0405-05	KNOB FITTING SPRING (MAIN)		
40	1A		G10-0651-04	FELT (SP)		
45	1D	*	G13-0868-04	CUSHION (3 KEY)		
46	2D	*	G13-0869-04	CUSHION (10 KEY)		
47	1D	*	G13-0870-04	CUSHION (UP/DOWN)		
-		*	H01-8178-04	ITEM CARTON BOX(TM-721A)	K	
-		*	H01-8179-04	ITEM CARTON BOX(TM-721A)	M	
-		*	H01-8180-04	ITEM CARTON BOX(TM-721E)	TW	
-		*	H10-2642-02	POLYSTYRENE FOAMED FIXTURE		

E: Scandinavia & Europe K: USA P: Canada W:Europe
U: PX(Far East, Hawaii) T: England M: Other Areas
UE: AAFES(Europe) X: Australia

⚠ indicates safety critical components.

PARTS LIST

* New Parts
Parts without **Parts No.** are not supplied.
Les articles non mentionnes dans le **Parts No.** ne sont pas fournis.
Telle ohne **Parts No.** werden nicht gellefert.

Ref. No. 参照番号	Address 位置	New Parts 新	Parts No. 部品番号	Description 部品名／規格	Destination 仕向	Remarks 備考
-		*	H12-1345-14	PACKING FIXTURE(TOP)		
-			H25-0029-04	PROTECTION BAG(MIC HOOK,SCREW)	K	
-			H25-0117-04	PROTECTION BAG(DC CORD)		
-			H25-0706-04	PROTECTION BAG(RADIO)		
			J20-0319-24	MIC HOOK (ACSY)	K	
			J29-0418-03	MOUNTING BRACKET		
61	2D	*	J21-4226-04	MOUNTING HARDWARE(SUB PANEL)		
62	1A	*	J21-4232-04	MOUNTING HARDWARE(SPEAKER)		
64	2D		J31-0141-04	COLLAR (MIC)		
68	2C	*	K27-3026-04	KNOB(BUTTON) SLIDE VOLUME		
69	2C	*	K27-3028-04	KNOB(BUTTON) SLIDE SWITCH		
70	2C		K29-3060-04	KNOB (MAIN)		
71	1D	*	K29-3111-04	KNOB		
72	1D	*	K29-3112-04	KNOB		
73	2D	*	K29-3113-04	KNOB (DUAL)		
74	2C	*	K29-3114-04	KNOB (UP/DOWN)		
75	2C	*	K29-3115-04	KNOB (AF)		
76	2C	*	K29-3116-04	KNOB (SQ)		
77	1D	*	K29-3143-04	KNOB (F)		
78	2D	*	K29-3144-04	KNOB (LOW)		
79	2C	*	K29-3145-04	KNOB (SUB-ENCODER)		
		*	N09-2035-05	SCREW(M2.6X4) REAR PANEL		
			N32-2604-46	FLAT HEAD SCREW(PANEL)		
			N46-3010-46	PAN HEAD TAPPING SCREW(ACSY)	K	
			N99-0318-05	SCREW SET		
A	2A,3A		N09-0666-05	SCREW (SUB PANEL,CHASSIS)		
B	2A,2B		N09-2030-05	SCREW (HEAT SINK,CHASSIS)		
C	1A	*	N09-2032-05	SCREW(M2.6X4) SPEAKER		
E	1E,2E		N32-2606-46	FLAT HEAD SCREW(MOUNT HRDWR)		
G	1D,1E		N35-2004-46	BINDING HEAD SCREW(DISPLAY)		
H	3A,3B		N35-3006-45	BINDING HEAD SCREW(CABINET)		
J	1A,1B		N87-2606-46	BRAZIER HEAD TAPTITE SCREW(PCB		
K	2A		N87-2608-46	BRAZIER HEAD TAPTITE SCREW		
			S50-1406-05	TACT SWITCH (FOR MIC)	MTW	
			T91-0359-05	MICROPHONE	K	
			T91-0365-15	MICROPHONE	MTW	
94	1A		T07-0246-05	LOUDSPEAKER(FULLRANGE)		
			LC7582	IC(LCD DRIVER)Y(LCD DRIVER)		
99	1E		W09-0326-05	LITHUM BATTERY		
104	2B	*	X45-3180-11	FINAL UNIT	K	
104	2B	*	X45-3180-21	FINAL UNIT	M	
104	2B	*	X45-3180-51	FINAL UNIT	TW	
105	2A,1D	*	X53-3130-11	CONTROL UNIT	K	
105	2A,1D	*	X53-3130-21	CONTROL UNIT	M	
105	2A,1D	*	X53-3130-51	CONTROL UNIT	T	
105	3A,1D	*	X53-3130-61	CONTROL UNIT	W	
106	3A	*	X57-3210-01	430MHZ TX-RX UNIT	MTW	
106	3A	*	X57-3210-11	440MHZ TX-RX UNIT	K	
108	2A	*	X57-3230-11	144MHZ TX-RX UNIT	K	
108	2A	*	X57-3230-21	144MHZ TX-RX UNIT	MTW	

E: Scandinavia & Europe **K:** USA **P:** Canada **W:**Europe
U: PX(Far East, Hawaii) **T:** England **M:** Other Areas
UE : AAFES(Europe) **X:** Australia

⚠ indicates safety critical components.

PARTS LIST

* New Parts
Parts without **Parts No.** are not supplied.
Les articles non mentionnes dans le **Parts No.** ne sont pas fournis.
Teile ohne **Parts No.** werden nicht geliefert.

Ref. No. 参照番号	Address 位置	New Parts 新	Parts No. 部品番号	Description 部品名／規格	Destination 仕向	Remarks 備考
FINAL UNIT (X45-3180-XX) -11:K, -21:M, -51:T, W						
		*	B42-3322-04	LABEL (FOR ANT CABLE 144MHZ)		
		*	B42-3323-04	LABEL (FOR ANT CABLE 430MHZ)	MTW	
		*	B42-3324-04	LABEL (FOR ANT CABLE 440MHZ)	K	
C1			CK73FB1H102K	CHIP C 1000PF K		
C2			CC73FCH1H620J	CHIP C 62PF J		
C3			CC73FCH1H910J	CHIP C 91PF J		
C4 ,5			CK73FB1H102K	CHIP C 1000PF K		
C6			CC73FCH1H200J	CHIP C 20PF J		
C7			CE04CW1C100M	ELECTRO 10UF 16WV		
C8 -12			CK73FB1H102K	CHIP C 1000PF K		
C13 ,14			CE04CW1C100M	ELECTRO 10UF 16WV		
C16			CC45SL2H100D	CERAMIC 10PF D		
C17 ,18			CK73FB1H102K	CHIP C 1000PF K		
C19			CC45SL2H080D	CERAMIC 8.0PF D		
C20			CK45B2H102K	CERAMIC 1000PF K		
C21			CC45SL2H150J	CERAMIC 15PF J		
C22			CC41FCH1H180J	CYLND CHIP C 18PF J		
C23 ,24			CC45SL2H220J	CERAMIC 22PF J		
C25			CC73FCH1H0R5C	CHIP C 0.5PF C		
C26			CC45SL2H270J	CERAMIC 27PF J		
C27			CC41FCH1H010C	CYLND CHIP C 1.0PF C		
C28			CK73FB1H102K	CHIP C 1000PF K		
C29			CC45SL2H180J	CERAMIC 18PF J		
C30 -32			CK73FB1H102K	CHIP C 1000PF K		
C34			CK73FB1H102K	CHIP C 1000PF K		
C35			CK73FB1H472K	CHIP C 4700PF K		
C36			CK73FB1H102K	CHIP C 1000PF K		
C37			CK73FB1H472K	CHIP C 4700PF K		
C38 -43			CK73FB1H102K	CHIP C 1000PF K		
C44			CK73FB1H471K	CHIP C 470PF K		
C45			CE04CW1C100M	ELECTRO 10UF 16WV		
C46 ,47			CK73FB1H471K	CHIP C 470PF K		
C48			CE04CW1C100M	ELECTRO 10UF 16WV		
C49			CM73F2H050C	CHIP C 5.0PF C		
C50			CC45SL2H030C	CERAMIC 3.0PF C		
C51			CC73FCH1H040C	CHIP C 4.0PF C		
C52			CC73FCH1H0R5C	CHIP C 0.5PF C		
C53			CC45SL2H050C	CERAMIC 5.0PF C		
C54			CC73FCH1H0R5C	CHIP C 0.5PF C		
C55			CM73F2H160J	CHIP C 16PF J		
C56			CC73FCH1H120J	CHIP C 12PF J		
C57			CM73F2H220J	CHIP C 22PF J		
C58			CC45SL2H080D	CERAMIC 8.0PF D		
C59			CM73F2H160J	CHIP C 16PF J		
C60			CC45SL2H050C	CERAMIC 5.0PF C		
C61			CC73FCH1H0R5C	CHIP C 0.5PF C		
C62			CM73F2H020C	CHIP C 2.0PF C		
C63 ,64			CK73FB1H471K	CHIP C 470PF K		
C68			CK73FB1H471K	CHIP C 470PF K		
C69 ,70			CK73FB1H102K	CHIP C 1000PF K		
C71 -74			CK73FB1H471K	CHIP C 470PF K		
C75 -77			CK73FB1H102K	CHIP C 1000PF K		
C78			CE04EW1C102M	ELECTRO 1000UF 16WV		

E: Scandinavia & Europe K: USA P: Canada W: Europe
U: PX(Far East, Hawaii) T: England M: Other Areas
UE: AAFES(Europe) X: Australia

⚠ indicates safety critical components.

PARTS LIST

* New Parts
Parts without **Parts No.** are not supplied.
Les articles non mentionnes dans le **Parts No.** ne sont pas fournis.
Teile ohne **Parts No.** werden nicht gellefert.

Ref. No. 参照番号	Address 位置	New Parts 新	Parts No. 部品番号	Description 部品名／規格	Destination 仕向	Remarks 備考
CN1			E40-3246-05	PIN ASSY (2P)		
CN8		*	E31-3349-05	COAX CABLE WITH PLUG(DO 55MM)		
CN9		*	E31-3215-15	COAX CABLE WITH PLUG(RA 85MM)		
J1	1A		E11-0425-05	3.5D PHONE JACK		
J2	1B	*	E30-2106-05	ANT CABLE (430MHZ N TYPE)	TW	
J2	1B	*	E30-2107-05	ANT CABLE (430/440MHZ M TYPE)	KM	
J3	2B	*	E30-2105-05	ANT CABLE (144MHZ)		
J4	2B	*	E30-2113-05	DC CORD (REAR PANEL)		
TP1 -3			E23-0465-05	TERMINAL		
W1		*	E31-3350-05	CONNECTING WIRE		
W4			E23-0435-05	TERMINAL (FB)		
W5		*	E31-3353-05	CONNECTING WIRE(9P)		
W6		*	E31-3352-05	CONNECTING WIRE(5P)		
W7		*	E31-3351-05	CONNECTING WIRE(6P)		
A1	2B		F01-0957-02	HEAT SINK		
A2	1B		F11-1090-03	SHIELDING COVER(144MHZ)		
A3	3B		F11-1091-03	SHIELDING COVER(430/440MHZ)		
F1	2B		F05-1031-05	FUSE (10A)		
A4	2B		G02-0576-04	LEAF SPRING		
A5			J42-0453-05	POWER CORD BUSHING		
L1			L40-2272-80	SMALL FIXED INDUCTOR(22NH)		
L2			L40-1072-80	SMALL FIXED INDUCTOR(10NH)		
L3			L34-0895-05	COIL (6T)		
L4			L34-1017-05	COIL (3T)		
L5			L34-1039-05	COIL (1.5T)		
L6			L34-0908-05	COIL (9.5T)		
L7			L34-1153-05	COIL (7T)		
L8			L34-0452-05	COIL (6T)		
L9			L34-0908-05	COIL (9.5T)		
L10			L34-0742-05	COIL (5T)		
L11			L34-1208-05	COIL (3T)		
L12			L40-1092-16	SMALL FIXED INDUCTOR(1UH.5MM)		
L13			L34-1113-05	COIL (1.5T)		
L14			L34-0904-05	COIL		
L15			L34-1185-05	COIL (2.5T)		
L16			L34-1032-05	COIL (3.5T)		
L17			L34-1226-05	COIL (1.5T)		
L18			L34-1040-05	COIL (1T)		
L19			L40-1092-16	SMALL FIXED INDUCTOR(1UH.5MM)		
L21			L15-0306-05	LOW-FREQUENCY CHOKE COIL		
F	1B.3B		N09-0650-05	SCREW (SHIELD COVER)		
J	2B.2B		N87-2606-46	TAPTITE SCREW (PC BOARD)		
L	1B.3B		N09-0626-04	SCREW (POWER MODULE)		
M	1B.2B		N87-2606-41	TAPTITE SCREW (ANT)		
R1			RD41FB2B271J	CYLND CHIP R 270 J 1/8W		
R2			RD41FB2B180J	CYLND CHIP R 18 J 1/8W		
R3			RD41FB2B271J	CYLND CHIP R 270 J 1/8W		
R4			RK73FB2A470J	CHIP R 47 J 1/10W		
R5			RK73FB2A152J	CHIP R 1.5K J 1/10W		
R6			RD14DB2H220J	SMALL-RD 22 J 1/2W		
R10			R92-0687-05	CHIP R 0 OHM		
R11			RD14DB2H151J	SMALL-RD 150 J 1/2W		
R13 ,14			RK73FB2A223J	CHIP R 22K J 1/10W		

E: Scandinavia & Europe K: USA P: Canada W:Europe
U: PX(Far East, Hawaii) T: England M: Other Areas
UE : AAFES(Europe) X: Australia

⚠ indicates safety critical components.

PARTS LIST

* New Parts
Parts without **Parts No.** are not supplied.
Les articles non mentionnes dans le **Parts No.** ne sont pas fournis.
Telle ohne **Parts No.** werden nicht geliefert.

Ref. No. 参照番号	Address 位置	New Parts 新	Parts No. 部品番号	Description 部品名／規格	Destination 仕向	Remarks 備考
R15			R92-0687-05	CHIP R 0 OHM		
R16			RK73FB2A223J	CHIP R 22K J 1/10W		
R17			RK73FB2A333J	CHIP R 33K J 1/10W		
R19			RD41FB2B330J	CYLND CHIP R 33 J 1/8W		
R20			R92-0687-05	CHIP R 0 OHM		
R25			RD14DB2H151J	SMALL-RD 150 J 1/2W		
R26			RK73FB2A103J	CHIP R 10K J 1/10W		
R27			RD41FB2B330J	CYLND CHIP R 33 J 1/8W		
R28			RK73FB2A334J	CHIP R 330K J 1/10W		
VR1			R12-3457-05	TRIMMING POT. (47K) RF.PRO		
VR2			R12-1440-05	TRIMMING POT. (4.7K) APC		
VR3			R12-3457-05	TRIMMING POT. (47K) RF.PRO		
VR4			R12-3464-05	TRIMMING POT. (22K) LOW		
D1			1SS184	DIODE		
D2			UM9401	DIODE (TX SW)		
D3			MI308	DIODE		
D4			1SS101	DIODE		
D5			1SS184	DIODE		
D7			UM9401	DIODE (TX SW)		
D8			MI308	DIODE		
D9 ,10			1SS101	DIODE		
D12			DSA3A1	DIODE		
Q1			M57726	POWER MODULE (144MHZ)		
Q2			2SC2538-22-A	TRANSISTOR		
Q3			FMW1	TRANSISTOR		
Q4			M57788M	POWER MODULE (430/440MHZ)		
Q5			2SD1406(Y)	TRANSISTOR		
Q6			DTC114EK	DIGITAL TRANSISTOR		
TH1			112-503-2	THERMISTOR (10K)		
CONTROL UNIT (X45-3130-XX) -11:K, -21:M, -51:T, -61:W						
C1			CK41FY1E102M	CYLND CHIP C 1000PF M		
C2			CC73FSL1H101J	CHIP C 100PF J		
C3			C92-0004-05	CHIP TAN 1UF 16WV		
C5			CK41FB1H471K	CYLND CHIP C 470PF K		
C6			CK73EB1E104K	CHIP C 0.10UF K		
C7 ,8			C92-0005-05	CHIP-TAN 2.2UF 6.3WV		
C9			C92-0004-05	CHIP TAN 1UF 16WV		
C10			CK73FB1E223K	CHIP C 0.022UF K		
C11			CK41FY1E102M	CYLND CHIP C 1000PF M		
C12			CE04CW1C100M	ELECTRO 10UF 16WV		
C13			CE04CW1A101M	ELECTRO 100UF 10WV		
C14 ,15			CK41FY1E102M	CYLND CHIP C 1000PF M		
C16			CK73FB1H103K	CHIP C 0.010UF K		
C18 ,19			CC73FSL1H101J	CHIP C 100PF J		
C20 ,21			CK73EB1E333K	CHIP C 0.033UF K		
C22			CK73FB1E223K	CHIP C 0.022UF K		
C23 ,24			CK41FY1E222M	CYLND CHIP C 2200PF M		
C25			CK73FB1E223K	CHIP C 0.022UF K		
C26			C92-0004-05	CHIP TAN 1UF 16WV		
C27			CK73EF1C105Z	CHIP C 1.0UF Z		
C28			CK41FW1H821M	CYLND CHIP C 820PF M		
C29			CK73FB1H272K	CHIP C 2700PF K		
C30 ,31			CC73FSL1H101J	CHIP C 100PF J		
C33			CK73EB1E473K	CHIP C 0.047UF K		

E: Scandinavia & Europe K: USA P: Canada W: Europe
U: PX(Far East, Hawaii) T: England M: Other Areas
UE: AAFES(Europe) X: Australia

⚠ indicates safety critical components.

PARTS LIST

* New Parts
Parts without **Parts No.** are not supplied.
Les articles non mentionnes dans le **Parts No.** ne sont pas fournis.
Teile ohne **Parts No.** werden nicht geliefert.

Ref. No. 参照番号	Address 位置	New Parts 新	Parts No. 部品番号	Description 部品名／規格	Destination 仕向	Remarks 備考
C34 ,35			CK73EB1E104K	CHIP C 0.10UF K	KM	
C35			CK73EB1E104K	CHIP C 0.10UF K	TW	
C36			CK73FB1E223K	CHIP C 0.022UF K		
C101			CK73EF1C105Z	CHIP C 1.0UF Z		
C102			CK73FB1H103K	CHIP C 0.010UF K		
C103,104			CK41FY1E102M	CYLND CHIP C 1000PF M		
C105			CK73EF1C105Z	CHIP C 1.0UF Z		
C106			CK73FB1E223K	CHIP C 0.022UF K		
C108-112			CK41FY1E102M	CYLND CHIP C 1000PF M		
C113			CK73FB1E223K	CHIP C 0.022UF K		
C114-117			CK41FY1E102M	CYLND CHIP C 1000PF M		
C118,119			CK73FB1H103K	CHIP C 0.010UF K		
C120,121			CC73FCH1H330J	CHIP C 33PF J		
C123			CK73FB1E223K	CHIP C 0.022UF K		
C124			CK73FB1H102K	CHIP C 1000PF K		
CN1			E40-3264-05	PIN CONNECTOR (6P)		
CN2			E40-3263-05	PIN CONNECTOR (5P)		
CN3			E40-3264-05	PIN CONNECTOR (6P)		
CN4			E40-3263-05	PIN CONNECTOR (5P)		
CN5 ,6		*	E40-5154-05	PIN CONNECTOR (12P)		
CN101,102		*	E40-5154-05	PIN CONNECTOR (12P)		
J101			E06-0858-05	8P METAL SOCKET(MIC)		
W1		*	E31-3354-05	CONNECTING WIRE(2P)		
W2		*	E31-3355-05	CONNECTING WIRE(5P)		
W3		*	E31-3356-05	CONNECTING WIRE(6P)		
W4		*	E31-3357-05	CONNECTING WIRE(5P)		
W5		*	E31-3358-05	CONNECTING WIRE(8P)		
W6		*	E31-3359-05	CONNECTING WIRE(3P)		
W7		*	E31-3360-05	CONNECTING WIRE(CTCSS)	KM	
W101		*	E31-3361-05	CONNECTING WIRE(5P)		
W102		*	E31-3362-05	CONNECTING WIRE(6P)		
A1		*	J30-0552-04	SPACER		
X1			L77-1333-05	CRYSTAL RESONATOR(4.194304MHZ)		
R1			RK73FB2A471J	CHIP R 470 J 1/10W		
R2			RK73FB2A103J	CHIP R 10K J 1/10W		
R3 ,4			RK73EB2B102J	CHIP R 1.0K J 1/8W		
R5			R92-0679-05	CHIP R 0 OHM		
R6			RK73FB2A102J	CHIP R 1.0K J 1/10W		
R7			RK73FB2A473J	CHIP R 47K J 1/10W		
R8			RK73FB2A333J	CHIP R 33K J 1/10W		
R9			RK73FB2A473J	CHIP R 47K J 1/10W		
R10 ,11			RK73FB2A104J	CHIP R 100K J 1/10W		
R12			RK73FB2A392J	CHIP R 3.9K J 1/10W		
R13			RK73FB2A103J	CHIP R 10K J 1/10W		
R14			RK73FB2A104J	CHIP R 100K J 1/10W		
R15			R92-0670-05	CHIP R 0 OHM	MK	
R16			R92-0679-05	CHIP R 0 OHM		
R17			R92-0670-05	CHIP R 0 OHM		
R18 ,19			R92-0679-05	CHIP R 0 OHM		
R20 ,21			RK73FB2A472J	CHIP R 4.7K J 1/10W		
R22			RK73FB2A561J	CHIP R 560 J 1/10W		
R23			RK73FB2A103J	CHIP R 10K J 1/10W		
R24			RK73FB2A222J	CHIP R 2.2K J 1/10W		

E: Scandinavia & Europe K: USA P: Canada W:Europe
U: PX(Far East, Hawaii) T: England M: Other Areas
UE: AAFES(Europe) X: Australia

⚠ indicates safety critical components.

PARTS LIST

✱ New Parts
Parts without **Parts No.** are not supplied.
Les articles non mentionnes dans le **Parts No.** ne sont pas fournis.
Teile ohne **Parts No.** werden nicht geliefert.

Ref. No. 参照番号	Address 位置	New Parts 新	Parts No. 部品番号	Description 部品名／規格	Destination 仕向	Remarks 備考
R26 -28			R92-0670-05	CHIP R 0 OHM		
R29			RK73FB2A102J	CHIP R 1.0K J 1/10W		
R30			RK73FB2A392J	CHIP R 3.9K J 1/10W		
R31			RK73FB2A152J	CHIP R 1.5K J 1/10W		
R32			RK73FB2A103J	CHIP R 10K J 1/10W		
R33			RK73FB2A334J	CHIP R 330K J 1/10W		
R34			RK73FB2A561J	CHIP R 560 J 1/10W		
R35			RK73FB2A223J	CHIP R 22K J 1/10W		
R36			RK73FB2A683J	CHIP R 68K J 1/10W		
R37			RK73FB2A474J	CHIP R 470K J 1/10W		
R38			RK73FB2A393J	CHIP R 39K J 1/10W		
R39			RK73FB2A101J	CHIP R 100 J 1/10W		
R40			RK73FB2A184J	CHIP R 180K J 1/10W		
R41			RK73FB2A224J	CHIP R 220K J 1/10W		
R42			RK73FB2A473J	CHIP R 47K J 1/10W		
R43			RK73FB2A333J	CHIP R 33K J 1/10W		
R44			RK73FB2A473J	CHIP R 47K J 1/10W		
R45			RK73FB2A224J	CHIP R 220K J 1/10W		
R46			RK73FB2A334J	CHIP R 330K J 1/10W		
R47 -49			RK73FB2A823J	CHIP R 82K J 1/10W		
R50 ,51			RK73FB2A103J	CHIP R 10K J 1/10W		
R52			RK73FB2A683J	CHIP R 68K J 1/10W	TW	
R53			RK73FB2A474J	CHIP R 470K J 1/10W	KM	
R54			RK73FB2A472J	CHIP R 4.7K J 1/10W	KM	
R55			RK73FB2A104J	CHIP R 100K J 1/10W	K	
R55 ,56			RK73FB2A104J	CHIP R 100K J 1/10W	M	
R57 ,58			R92-0150-05	JUMPER REST 0 OHM		
R59			RK73FB2A104J	CHIP R 100K J 1/10W	K	
R101			RK73FB2A474J	CHIP R 470K J 1/10W		
R102			RK73FB2A103J	CHIP R 10K J 1/10W		
R103			RK73FB2A823J	CHIP R 82K J 1/10W		
R104			RK73FB2A474J	CHIP R 470K J 1/10W		
R105			RK73FB2A473J	CHIP R 47K J 1/10W		
R106,107			RK73FB2A561J	CHIP R 560 J 1/10W		
R108-120			RK73FB2A473J	CHIP R 47K J 1/10W		
R118			R92-0670-05	CHIP R 0 OHM		
R121-125			R92-0670-05	CHIP R 0 OHM	W	
R121,122			R92-0670-05	CHIP R 0 OHM	MKT	
R124			R92-0670-05	CHIP R 0 OHM	M	
R124,125			R92-0670-05	CHIP R 0 OHM	K	
R125			R92-0670-05	CHIP R 0 OHM	T	
R126			R92-0679-05	CHIP R 0 OHM		
R127			RK73FB2A102J	CHIP R 1.0K J 1/10W		
R129-131			RK73FB2A102J	CHIP R 1.0K J 1/10W		
R138,139			R92-0670-05	CHIP R 0 OHM		
R140			RK73FB2A103J	CHIP R 10K J 1/10W		
R141			RK73FB2A563J	CHIP R 56K J 1/10W		
R156			RK73FB2A124J	CHIP R 120K J 1/10W	K	
VR101			R13-4403-05	SLIDE TYPE POT(50KB)CNTR CLICK		
VR102			R13-4402-05	SLIDE TYPE POT(50KB)		
VR201			R23-9405-05	POTENTIOMETER (AF.SQ)		
S101-115			S40-1086-05	TACT SWITCH		
S116			S31-1409-05	SLIDE SWITCH (F.CLOCK SW)		

E: Scandinavia & Europe **K:** USA **P:** Canada **W:** Europe
U: PX(Far East, Hawaii) **T:** England **M:** Other Areas
UE: AAFES(Europe) **X:** Australia

⚠ indicates safety critical components.

PARTS LIST

* New Parts
Parts without **Parts No.** are not supplied.
Les articles non mentionnes dans le **Parts No.** ne sont pas fournis.
Teile ohne **Parts No.** werden nicht gellefert.

Ref. No. 参照番号	Address 位置	New Parts 新	Parts No. 部品番号	Description 部品名／規格	Destination 仕向	Remarks 備考
D1			02CZ11Y	ZENER DIODE (11V)		
D2			02CZ8.2Y	ZENER DIODE (8.2V)		
D3			1SS226	CHIP DIODE		
D101,102			1SS184	CHIP DIODE		
D103			RLS73	DIODE		
D104			1SS184	CHIP DIODE		
IC1			MN4066BS	IC(QUAD ANALOG SWITCH)		
IC2			LC7532M	IC(BILATERAL SWITCH)		
IC3 ,4			MN4094BS	IC(8BIT SHIFT,STORE BASS R)		
IC5 ,6			NJM4558M	IC(OP AMP X2)		
IC7			UPC78M08H	IC(VOLTAGE REGULATOR/ +8V)		
IC102			LA5006M	IC(LOW SATURATION REGULATOR)		
IC103			75108G-620-1B	IC(MICROPROCESSOR)	KM	
IC103			75108G-621-1B	IC(MICROPROCESSOR)	TW	
IC104			KRR-C001	IC(CHIP NETWORK)		
Q1			2SC2712(Y)	CHIP TRANSISTOR		
Q3 ,4			DTC114EK	DIGITAL TRANSISTOR		
Q5 ,6			DTA114EK	DIGITAL TRANSISTOR		
Q7			DTC114EK	DIGITAL TRANSISTOR		
Q8			DTC114TK	DIGITAL TRANSISTOR		
Q9 ,10			DTC114EK	DIGITAL TRANSISTOR		
Q11			DTA114EK	DIGITAL TRANSISTOR		
Q12			2SC2712(Y)	CHIP TRANSISTOR	KM	
Q13 ,14			DTC114EK	DIGITAL TRANSISTOR		
Q101,102			2SC2712(Y)	CHIP TRANSISTOR		
S117			W02-0388-05	MAIN ROTARY ENCOSER		
S118		*	W02-0810-05	SUB ROTARY ENCODER		
430 MHz TX-RX UNIT (X57-3210-XX) -01:M, T, W, -11:K						
C1			CC73FCH1H100D	CHIP C 10PF D		
C2			CC73FCH1H030C	CHIP C 3.0PF C		
C3			CC73FSL1H101J	CHIP C 100PF J		
C4 -6			CK41FY1E102M	CYLND CHIP C 1000PF M		
C7			CC73FCH1H010C	CHIP C 1.0PF C		
C8			CC73FCH1H390J	CHIP C 39PF J		
C9 -11			CK41FY1E102M	CYLND CHIP C 1000PF M		
C12			CC73FCH1H010C	CHIP C 1.0PF C		
C13			CC73FCH1H330J	CHIP C 33PF J		
C14			CK41FY1E102M	CYLND CHIP C 1000PF M		
C15			CC73FSL1H101J	CHIP C 100PF J		
C16			CK41FY1E102M	CYLND CHIP C 1000PF M		
C17 ,18			CC73FCH1H050C	CHIP C 5.0PF C		
C19			CC73FCH1H100D	CHIP C 10PF D		
C20			CK41FY1E102M	CYLND CHIP C 1000PF M		
C21			CC73FCH1H060D	CHIP C 6.0PF D	MTW	
C21			CC73FCH1H100D	CHIP C 10PF D	K	
C22			CC73FSL1H101J	CHIP C 100PF J		
C23 -25			CK41FY1E102M	CYLND CHIP C 1000PF M		
C26			CC73FCH1H100D	CHIP C 10PF D	MTW	
C26			CC73FCH1H330J	CHIP C 33PF J	K	
C27			CK41FY1E102M	CYLND CHIP C 1000PF M		
C28			CC73FCH1H330J	CHIP C 33PF J	K	
C28			CC73FCH1H390J	CHIP C 39PF J	MTW	
C29			CK73FB1E223K	CHIP C 0.022UF K		
C30 -32			CK73EB1E104K	CHIP C 0.10UF K		

E: Scandinavia & Europe K: USA P: Canada W:Europe
U: PX(Far East, Hawaii) T: England M: Other Areas
UE: AAFES(Europe) X: Australia

⚠ indicates safety critical components.

PARTS LIST

* New Parts
Parts without **Parts No.** are not supplied.
Les articles non mentionnes dans le **Parts No.** ne sont pas fournis.
Teile ohne **Parts No.** werden nicht geliefert.

Ref. No. 参照番号	Address 位置	New Parts 新	Parts No. 部品番号	Description 部品名／規格	Destination 仕向	Remarks 備考
C33			CK41FY1E102M	CYLND CHIP C 1000PF M		
C34			CE04EW1C470M	ELECTRO 47UF 16WV		
C35 ,36			CK73FB1H103K	CHIP C 0.010UF K		
C37			CK73EB1E104K	CHIP C 0.10UF K		
C38			CK73FB1H103K	CHIP C 0.010UF K		
C39			C92-0003-05	CHIP TAN 0.47UF 25WV		
C40			CK41FY1E102M	CYLND CHIP C 1000PF M		
C41			CE04EW1C470M	ELECTRO 47UF 16WV		
C42			CK41FY1E102M	CYLND CHIP C 1000PF M		
C43 ,44			CE04EW1C470M	ELECTRO 47UF 16WV		
C45			CK73EB1E104K	CHIP C 0.10UF K		
C46			CK41FY1E102M	CYLND CHIP C 1000PF M		
C47			C92-0005-05	CHIP-TAN 2.2UF 6.3WV		
C48			CK41FY1E102M	CYLND CHIP C 1000PF M		
C49			CK73EB1E104K	CHIP C 0.10UF K		
C50			CE04EW1C470M	ELECTRO 47UF 16WV		
C51			C92-0005-05	CHIP-TAN 2.2UF 6.3WV		
C52 -55			CK41FY1E102M	CYLND CHIP C 1000PF M		
C56			CE04EW1C470M	ELECTRO 47UF 16WV		
C57			CK73EB1E104K	CHIP C 0.10UF K		
C58			CK41FY1E102M	CYLND CHIP C 1000PF M		
C59 ,60			CE04EW1C220M	ELECTRO 22UF 16WV		
C61			CE04EW1A101M	ELECTRO 100UF 10WV		
C62 ,63			CK73EB1H153K	CHIP C 0.015UF K		
C64 ,65			C92-0005-05	CHIP-TAN 2.2UF 6.3WV		
C66			CK41FY1E102M	CYLND CHIP C 1000PF M		
C67			CE04EW1C470M	ELECTRO 47UF 16WV		
C68 ,69			CK41FY1E102M	CYLND CHIP C 1000PF M		
C70			CK73EB1H103K	CHIP C 0.010UF K		
C72			CE04EW1H2R2M	ELECTRO 2.2UF 50WV		
C73			CK73EB1H103K	CHIP C 0.010UF K		
C74			CK41FY1E102M	CYLND CHIP C 1000PF M		
C75			C92-0004-05	CHIP TAN 1UF 16WV		
C76			CK41FY1E102M	CYLND CHIP C 1000PF M		
C77 ,78			CK73FB1H103K	CHIP C 0.010UF K		
C79			CE04EW1C470M	ELECTRO 47UF 16WV		
C80 ,81			CK41FY1E102M	CYLND CHIP C 1000PF M		
C82 ,83			CE04EW1A221M	ELECTRO 220UF 10WV		
C84			C92-0004-05	CHIP TAN 1UF 16WV		
C85			CK73FB1H103K	CHIP C 0.010UF K		
C86 ,87			CK41FY1E102M	CYLND CHIP C 1000PF M		
C88 -90			CC73FSL1H101J	CHIP C 100PF J		
C91			CK41FY1E102M	CYLND CHIP C 1000PF M		
C92			CC73FCH1H030C	CHIP C 3.0PF C		
C93			CK41FY1E102M	CYLND CHIP C 1000PF M		
C94			CC73FCH1H050C	CHIP C 5.0PF C		
C95 ,96			C92-0504-05	CHIP-TAN 0.68UF 20WV		
C97 -102			CK41FY1E102M	CYLND CHIP C 1000PF M		
C103			CE04CW1C470M	ELECTRO 47UF 16WV		
C119			CE04EW1C101M	ELECTRO 100UF 16WV		
C120			CK41FY1E102M	CYLND CHIP C 1000PF M		
C121		*	C90-2040-05	ELECTRO 10UF 16WV		
C122-124			CK73FB1H471K	CHIP C 470PF K		
C125			CC73FCH1H050C	CHIP C 5.0PF C		
C126-127			CK73FB1H471K	CHIP C 470PF K		

E: Scandinavia & Europe **K**: USA **P**: Canada **W**:Europe
U: PX(Far East, Hawaii) **T**: England **M**: Other Areas
UE : AAFES(Europe) **X**: Australia

⚠ indicates safety critical components.

PARTS LIST

⁎ New Parts
Parts without **Parts No.** are not supplied.
Les articles non mentionnes dans le **Parts No.** ne sont pas fournis.
Teile ohne **Parts No.** werden nicht geliefert.

Ref. No. 参照番号	Address 位置	New Parts 新	Parts No. 部品番号	Description 部品名／規格	Destination 仕向	Remarks 備考
C128			CE04EW1C100M	ELECTRO 10UF 16WV		
C129,130			CK73FB1H471K	CHIP C 470PF K		
C131			CC73FCH1H180J	CHIP C 18PF J		
C132			CC73FCH1H030C	CHIP C 3.0PF C		
C133			CC73FCH1H220J	CHIP C 22PF J	MTW	
C133			CK73FB1H471K	CHIP C 470PF K	K	
C134			CC73FCH1H100D	CHIP C 10PF D	MTW	
C134			CC73FCH1H150J	CHIP C 15PF J	K	
C135,136			CK73FB1H471K	CHIP C 470PF K		
C137			CE04EW1C100M	ELECTRO 10UF 16WV		
C139			CK73FB1H471K	CHIP C 470PF K		
C140			CE04EW1C470M	ELECTRO 47UF 16WV		
TC1			C05-0345-05	TRIMMING CAP (10PF)		
TC2 ,3			C05-0346-05	TRIMMING CAP (6PF)		
CN1			E04-0157-05	MINI-PIN JACK A (RA,DA1)		
CN2			E40-3246-05	PIN CONNECTOR (2P)		
CN3			E40-3249-05	PIN CONNECTOR (5P)		
CN4			E40-3252-05	PIN CONNECTOR (8P)		
CN5			E40-3247-05	PIN CONNECTOR (3P)		
CN6			E40-3249-05	PIN CONNECTOR (5P)		
CN7			E40-3246-05	PIN CONNECTOR (2P)		
CN8			E04-0157-05	MINI-PIN JACK A (RA,DA1)		
CN9			E40-3250-05	PIN CONNECTOR (6P)		
CN10			E40-3249-05	PIN CONNECTOR (5P)		
CN11			E40-3250-05	PIN CONNECTOR (6P)		
TPA ,B			E23-0465-05	TERMINAL	MTW	
TP1			E40-0211-05	PIN CONNECTOR (2P)		
TP2 ,3			E23-0465-05	TERMINAL		
A1 ,2			F11-0836-05	SHIELDING COVER		
CF1			L72-0315-05	CERAMIC FILTER (CFW455F)		
L1			L34-1051-05	COIL (0.6TCW)		
L2			L34-1052-05	COIL (3,1.5T)		
L3 ,4			L79-0690-05	HELICAL BROCK		
L5			L40-1072-80	SMALL FIXED INDUCTOR(10NH)		
L6			L34-1051-05	COIL (0.6TCW)		
L7			L40-2281-80	SMALL FIXED INDUCTOR(220NH)		
L8			L34-2157-05	COIL (30.825MHZ)	MTW	
L8 ,9			L30-0508-05	IFT (21.6MHZ)	K	
L9			L34-2045-05	COIL (30.825MHZ)	MTW	
L10			L40-1092-81	SMALL FIXED INDUCTOR(1UH)	MTW	
L11			L34-4015-05	COIL (455KHZ)		
L12			L40-2272-80	SMALL FIXED INDUCTOR(22NH)		
L13			L40-3372-80	SMALL FIXED INDUCTOR(33NH)		
L14 -16			L40-1072-80	SMALL FIXED INDUCTOR(10NH)		
L17			L34-1058-05	COIL (3,2.5T)	MTW	
L17 ,18			L34-1079-05	COIL (3,1.5T)	K	
L18			L34-1079-05	COIL (3,1.5T)	MTW	
X1			L77-0997-05	CRYSTAL RESONATOR(21.145MHZ)	K	
X1			L77-1312-05	CRYSTAL RESONATOR(30.37MHZ)	MTW	
XF1			L71-0227-05	MCF (21.6MHZ)	K	
XF1			L71-0270-05	MCF (30.825MHZ)	MTW	
R1			RK73FB2A101J	CHIP R 100 J 1/10W		
R2			RK73FB2A333J	CHIP R 33K J 1/10W		

E: Scandinavia & Europe **K:** USA **P:** Canada **W:** Europe
U: PX(Far East, Hawaii) **T:** England **M:** Other Areas
UE : AAFES(Europe) **X:** Australia

⚠ indicates safety critical components.

PARTS LIST

⁎ New Parts
Parts without **Parts No.** are not supplied.
Les articles non mentionnes dans le **Parts No.** ne sont pas fournis.
Telle ohne **Parts No.** werden nicht geliefert.

Ref. No. 参照番号	Address 位置	New Parts 新	Parts No. 部品番号	Description 部品名／規格				Destination 仕向	Remarks 備考
R3			RK73FB2A104J	CHIP R	100K	J	1/10W		
R4			RK73FB2A101J	CHIP R	100	J	1/10W		
R5			RK73FB2A470J	CHIP R	47	J	1/10W		
R6			R92-0670-05	CHIP R	0 OHM				
R7			RK73FB2A270J	CHIP R	27	J	1/10W		
R8			R92-0670-05	CHIP R	0 OHM				
R9			RK73FB2A102J	CHIP R	1.0K	J	1/10W		
R12			RK73FB2A221J	CHIP R	220	J	1/10W		
R13			RK73FB2A332J	CHIP R	3.3K	J	1/10W		
R14			RK73FB2A470J	CHIP R	47	J	1/10W		
R15			RK73FB2A222J	CHIP R	2.2K	J	1/10W		
R16			RK73FB2A332J	CHIP R	3.3K	J	1/10W		
R17			R92-0670-05	CHIP R	0 OHM				
R18			RK73FB2A182J	CHIP R	1.8K	J	1/10W	K	
R18			RK73FB2A222J	CHIP R	2.2K	J	1/10W	MTW	
R19			RK73FB2A334J	CHIP R	330K	J	1/10W		
R20			RK73FB2A102J	CHIP R	1.0K	J	1/10W		
R22			RK73FB2A683J	CHIP R	68K	J	1/10W		
R23			RK73FB2A103J	CHIP R	10K	J	1/10W	MTW	
R24			RK73FB2A333J	CHIP R	33K	J	1/10W		
R25			RK73FB2A332J	CHIP R	3.3K	J	1/10W		
R26			RK73FB2A472J	CHIP R	4.7K	J	1/10W		
R27			RK73FB2A334J	CHIP R	330K	J	1/10W		
R28			RK73FB2A392J	CHIP R	3.9K	J	1/10W		
R29			RK73FB2A334J	CHIP R	330K	J	1/10W		
R30			RK73FB2A392J	CHIP R	3.9K	J	1/10W		
R31			RK73FB2A471J	CHIP R	470	J	1/10W		
R32			RK73FB2A103J	CHIP R	10K	J	1/10W		
R33			RK73FB2A681J	CHIP R	680	J	1/10W		
R34			RK73FB2A471J	CHIP R	470	J	1/10W		
R35			RK73FB2A390J	CHIP R	39	J	1/10W		
R36			RK73FB2A471J	CHIP R	470	J	1/10W		
R37			RK73FB2A222J	CHIP R	2.2K	J	1/10W		
R38			RK73FB2A102J	CHIP R	1.0K	J	1/10W		
R39			R92-0670-05	CHIP R	0 OHM				
R40			RK73FB2A390J	CHIP R	39	J	1/10W		
R41			RK73FB2A222J	CHIP R	2.2K	J	1/10W		
R42			RK73FB2A102J	CHIP R	1.0K	J	1/10W		
R43 ,44			RK73FB2A332J	CHIP R	3.3K	J	1/10W		
R45			RK73FB2A821J	CHIP R	820	J	1/10W		
R46 ,47			RK73FB2A222J	CHIP R	2.2K	J	1/10W		
R49			RK73FB2A333J	CHIP R	33K	J	1/10W		
R49			RK73FB2A473J	CHIP R	47K	J	1/10W		
R51			RK73FB2A473J	CHIP R	47K	J	1/10W		
R52			RK73FB2A102J	CHIP R	1.0K	J	1/10W		
R53			RK73FB2A270J	CHIP R	27	J	1/10W		
R54			RK73FB2A222J	CHIP R	2.2K	J	1/10W		
R55			RK73FB2A270J	CHIP R	27	J	1/10W		
R56			RK73FB2A152J	CHIP R	1.5K	J	1/10W		
R57 ,58			RK73FB2A103J	CHIP R	10K	J	1/10W		
R59			R92-0670-05	CHIP R	0 OHM				
R60			RK73FB2A103J	CHIP R	10K	J	1/10W		
R61 ,62			R92-0679-05	CHIP R	0 OHM				
R64			RK73FB2A103J	CHIP R	10K	J	1/10W		
R65 ,66			RK73FB2A101J	CHIP R	100	J	1/10W		

E: Scandinavia & Europe K: USA P: Canada W: Europe
U: PX(Far East, Hawaii) T: England M: Other Areas
UE: AAFES(Europe) X: Australia

⚠ indicates safety critical components.

PARTS LIST

* New Parts
Parts without **Parts No.** are not supplied.
Les articles non mentionnes dans le **Parts No.** ne sont pas fournis.
Teile ohne **Parts No.** werden nicht geliefert.

Ref. No. 参照番号	Address 位置	New Parts 新	Parts No. 部品番号	Description 部品名／規格	Destination 仕向	Remarks 備考
R67			RK73FB2A222J	CHIP R 2.2K J 1/10W		
R68			RK73FB2A103J	CHIP R 10K J 1/10W		
R70			RK73FB2A473J	CHIP R 47K J 1/10W		
R72			R92-0670-05	CHIP R 0 OHM		
R74			R92-0670-05	CHIP R 0 OHM		
R75			R92-0679-05	CHIP R 0 OHM		
R76			RK73FB2A473J	CHIP R 47K J 1/10W		
R77			RK73FB2A331J	CHIP R 330 J 1/10W		
R79			R92-0679-05	CHIP R 0 OHM		
R80			RK73FB2A104J	CHIP R 100K J 1/10W		
R81			RK73FB2A102J	CHIP R 1.0K J 1/10W		
R83			RK73FB2A102J	CHIP R 1.0K J 1/10W		
R84			RK73FB2A470J	CHIP R 47 J 1/10W		
R85			RK73FB2A101J	CHIP R 100 J 1/10W		
R86			RK73FB2A470J	CHIP R 47 J 1/10W		
R87			RK73FB2A152J	CHIP R 1.5K J 1/10W		
R88			RK73FB2A100J	CHIP R 10 J 1/10W		
R89			RK73FB2A151J	CHIP R 150 J 1/10W	K	
R89			RK73FB2A221J	CHIP R 220 J 1/10W	MTW	
R90			RK73FB2A220J	CHIP R 22 J 1/10W	MTW	
R90			RK73FB2A390J	CHIP R 39 J 1/10W	K	
R91			RK73FB2A221J	CHIP R 220 J 1/10W	MTW	
R91 ,92			RK73FB2A151J	CHIP R 150 J 1/10W	K	
R92			RK73FB2A151J	CHIP R 150 J 1/10W	MTW	
R93			RK73FB2A152J	CHIP R 1.5K J 1/10W		
R94			R92-0685-05	RD 22 J 1/2W		
VR1		*	R12-5424-05	TRIMMING POT. (220K) TIGHT SQ		
VR2			R12-0439-05	TRIMMING POT. (470) S-METER		
VR3			R12-3458-05	TRIMMING POT. (10K) DEV.LOW		
VR4			R12-3457-05	TRIMMING POT. (47K) PRO.RF		
VR5			R12-1440-05	TRIMMING POT. (4.7K) APC		
VR6			R12-3457-05	TRIMMING POT. (47K) PRO.RF		
VR7			R12-3458-05	TRIMMING POT. (10K) DEV.LOW		
D1			1SS184	CHIP DIODE		
D2			HSM88AS	DIODE		
D3			1SS184	CHIP DIODE		
D4			02CZ6.2(X,Y)	ZENER DIODE (6.2V)		
D5 ,6			1SV128	CHIP DIODE		
D7 ,8			1SS184	CHIP DIODE		
D10 ,11			1SS184	CHIP DIODE		
D12 ,13			1SS181	CHIP DIODE		
D14			02CZ4.3(X,Y)	ZENER DIODE (4.3V)		
IC1			MC3361D	IC(FM IF SYSTEM)		
IC2		*	KCS02	IC(BAND SW)		
IC3		*	KCA01	IC(NOISE AMP)		
IC4		*	KCA02	IC(AF AMP)		
IC5		*	KCA01	IC(NOISE AMP)		
IC6		*	KCA02	IC(AF AMP)		
IC7		*	M51523AL	IC(2H ELECTRIC VOLUME)		
IC8		*	KCE01	IC(AF LPF)		
IC9			NJM78L08UA	IC(VOLTAGE REGULATOR/ +8V)		
IC10		*	KCS01	IC(TR SW)		
IC11		*	KCC01	IC(APC)		
Q1 ,3			3SK184(S)	CHIP FET		

E: Scandinavia & Europe K: USA P: Canada W: Europe
U: PX(Far East, Hawaii) T: England M: Other Areas
UE: AAFES(Europe) X: Australia

⚠ indicates safety critical components.

PARTS LIST

* New Parts
Parts without **Parts No.** are not supplied.
Les articles non mentionnes dans le **Parts No.** ne sont pas fournis.
Teile ohne **Parts No.** werden nicht geliefert.

Ref. No. 参照番号	Address 位置	New Parts 新	Parts No. 部品番号	Description 部品名／規格	Destination 仕向	Remarks 備考
Q2			2SK125	FET		
Q4			2SC2714(Y)	CHIP TRANSISTOR		
Q5 ,6			2SC2712(Y)	CHIP TRANSISTOR		
Q7 ,8			2SC3326(A)	CHIP TRANSISTOR		
Q9			DTC124EK	DIGITAL TRANSISTOR		
Q10 ,11			2SC2712(Y)	CHIP TRANSISTOR		
Q12			2SC2759(U23)	CHIP TRANSISTOR		
Q13			2SC3326(A)	CHIP TRANSISTOR		
Q14			DTC124EK	DIGITAL TRANSISTOR		
Q15			2SC2759(U23)	CHIP TRANSISTOR		
Q16			2SC3357	CHIP TRANSISTOR		
Q17			2SC3369	TRANSISTOR		
TH1			112-501-2	CHIP THERMISTOR		
		*	X58-3330-00	SUB UNIT (VCO)	MTW	
		*	X58-3330-11	SUB UNIT (VCO)	K	
144 MHz TX-RX UNIT (X57-3230-XX) -11:K, -21:M, T, W						
C6			CC73FCH1H470J	CHIP C 47PF J		
C7			CC41FCH1H120J	CYLND CHIP C 12PF J		
C8 ,9			CK41FY1E102M	CYLND CHIP C 1000PF M		
C10			CK73FB1H103K	CHIP C 0.010UF K		
C11			CK41FY1E102M	CYLND CHIP C 1000PF M		
C12			CC73FCH1H470J	CHIP C 47PF J		
C13			CK73FB1H103K	CHIP C 0.010UF K		
C14			CC41FCH1H0R5C	CYLND CHIP C 0.5PF C		
C15			CC73FCH1H470J	CHIP C 47PF J		
C16			CC41FCH1H0R5C	CYLND CHIP C 0.5PF C		
C17			CC73FCH1H680J	CHIP C 68PF J		
C18			CK73FB1H103K	CHIP C 0.010UF K		
C19			CC41FCH1H040C	CYLND CHIP C 4.0PF C	K	
C19			CC41FCH1H150J	CYLND CHIP C 15PF J	MTW	
C20			CC41FCH1H030C	CYLND CHIP C 3.0PF C		
C21 ,22			CK41FY1E102M	CYLND CHIP C 1000PF M		
C23			CK73FB1H103K	CHIP C 0.010UF K		
C24			CC41FCH1H050C	CYLND CHIP C 5.0PF C	MTW	
C24			CC41FCH1H070D	CYLND CHIP C 7.0PF D	K	
C25			CC73FSL1H101J	CHIP C 100PF J		
C26 -28			CK41FY1E102M	CYLND CHIP C 1000PF M		
C29			CC73FCH1H390J	CHIP C 39PF J	MTW	
C29			CC73FSL1H101J	CHIP C 100PF J	K	
C30			CC73FCH1H560J	CHIP C 56PF J	K	
C30			CC73FSL1H101J	CHIP C 100PF J	MTW	
C31 ,32			CK73EB1E104K	CHIP C 0.10UF K		
C33			CK41FY1E102M	CYLND CHIP C 1000PF M		
C34			CK73EB1E104K	CHIP C 0.10UF K		
C35			CK73FB1E223K	CHIP C 0.022UF K		
C36 -38			CK73FB1H103K	CHIP C 0.010UF K		
C40			CE04CW1C470M	ELECTRO 47UF 16WV		
C41			CK73EB1E104K	CHIP C 0.10UF K		
C42			C92-0003-05	CHIP TAN 0.47UF 25WV		
C43 ,44			CK41FY1E102M	CYLND CHIP C 1000PF M		
C45			CK73FB1E223K	CHIP C 0.022UF K		
C46			CK41FY1E102M	CYLND CHIP C 1000PF M		
C47			CK73FB1H471K	CHIP C 470PF K		
C48			CK73FB1H103K	CHIP C 0.010UF K		

E: Scandinavia & Europe **K:** USA **P:** Canada **W:** Europe
U: PX(Far East, Hawaii) **T:** England **M:** Other Areas
UE: AAFES(Europe) **X:** Australia

⚠ indicates safety critical components.

PARTS LIST

* New Parts
Parts without **Parts No.** are not supplied.
Les articles non mentionnes dans le **Parts No.** ne sont pas fournis.
Teile ohne **Parts No.** werden nicht gellefert.

Ref. No. 参照番号	Address 位置	New Parts 新	Parts No. 部品番号	Description 部品名／規格	Destination 仕向	Remarks 備考
C49			CE04CW1C470M	ELECTRO 47UF 16WV		
C50		*	C90-2083-05	ELECTRO 22UF 6.3WV		
C51			C92-0004-05	CHIP TAN 1UF 16WV		
C52			CE04CW1C470M	ELECTRO 47UF 16WV		
C53			CK41FY1E102M	CYLND CHIP C 1000PF M		
C54			CC73FSL1H101J	CHIP C 100PF J		
C55			CK41FY1E102M	CYLND CHIP C 1000PF M		
C56			CQ92M1H104K	MYLAR 0.10UF K		
C57			CK41FY1E102M	CYLND CHIP C 1000PF M		
C58 ,59			CE04EW1C471M	ELECTRO 470UF 16WV		
C60			CE04CW1E4R7M	ELECTRO 4.7UF 25WV		
C61 ,62			C92-0504-05	CHIP-TAN 0.68UF 20WV		
C63			C92-0004-05	CHIP TAN 1UF 16WV		
C64			CK41FY1E102M	CYLND CHIP C 1000PF M		
C65			CC41FCH1H150J	CYLND CHIP C 15PF J		
C66			CC73FSL1H101J	CHIP C 100PF J		
C67			CC73FSL1H221J	CHIP C 220PF J		
C68			CK73FB1H103K	CHIP C 0.010UF K		
C69			CK41FY1E102M	CYLND CHIP C 1000PF M		
C70			CC41FCH1H050C	CYLND CHIP C 5.0PF C		
C71 ,72			CK41FY1E102M	CYLND CHIP C 1000PF M		
C73			C92-0004-05	CHIP TAN 1UF 16WV		
C74			CK41FY1E102M	CYLND CHIP C 1000PF M		
C75 -79			CK73FB1H103K	CHIP C 0.010UF K		
C78			CK41FY1E102M	CYLND CHIP C 1000PF M		
C80			CK41FY1E102M	CYLND CHIP C 1000PF M		
C81			CK73FB1H103K	CHIP C 0.010UF K		
C82 ,83			CK41FY1E102M	CYLND CHIP C 1000PF M		
C84			CE04EW1C470M	ELECTRO 47UF 16WV		
C85			CK41FY1E102M	CYLND CHIP C 1000PF M		
C86 -88			CC73FSL1H101J	CHIP C 100PF J		
C89			CC41FCH1H030C	CYLND CHIP C 3.0PF C		
C90			CE04EW1A221M	ELECTRO 220UF 10WV		
C91 ,92			CK41FY1E102M	CYLND CHIP C 1000PF M		
C93			CE04EW1E101M	ELECTRO 100UF 25WV		
C94			CK73FB1H471K	CHIP C 470PF K		
C95			CK41FY1E102M	CYLND CHIP C 1000PF M		
C96			CK73FB1H471K	CHIP C 470PF K		
C97 ,98			CK41FY1E102M	CYLND CHIP C 1000PF M		
C99			CC41FCH1H120J	CYLND CHIP C 12PF J		
C100			CE04CW1E100M	ELECTRO 10UF 25WV		
C101			CK73FB1H471K	CHIP C 470PF K		
C102,103			CK41FY1E102M	CYLND CHIP C 1000PF M		
C104			CK73FB1H471K	CHIP C 470PF K		
C105			CK41FY1E102M	CYLND CHIP C 1000PF M		
C106			CC41FCH1H220J	CYLND CHIP C 22PF J		
C107-111			CK41FY1E102M	CYLND CHIP C 1000PF M		
C139			CC41FCH1H100D	CYLND CHIP C 10PF D		
TC1			C05-0346-05	TRIMMING CAP		
CN2			E40-3247-05	PIN CONNECTOR (3P)		
CN3			E40-3246-05	PIN CONNECTOR (2P)		
CN4			E40-3249-05	PIN CONNECTOR (5P)		
CN5			E40-0273-05	PIN CONNECTOR (2P)		
CN6			E40-3250-05	PIN CONNECTOR (6P)		

E: Scandinavia & Europe **K**: USA **P**: Canada **W**: Europe
U: PX(Far East, Hawaii) **T**: England **M**: Other Areas
UE: AAFES(Europe) **X**: Australia

⚠ indicates safety critical components.

PARTS LIST

* New Parts
Parts without **Parts No.** are not supplied.
Les articles non mentionnes dans le **Parts No.** ne sont pas fournis.
Teile ohne **Parts No.** werden nicht geliefert.

Ref. No. 参照番号	Address 位置	New Parts 新	Parts No. 部品番号	Description 部品名／規格	Destination 仕向	Remarks 備考
CN7			E40-3246-05	PIN CONNECTOR (2P)		
CN8			E40-3248-05	PIN CONNECTOR (4P)		
CN9			E40-3246-05	PIN CONNECTOR (2P)		
TP1 ,2			E23-0465-05	TERMINAL		
CF1			L72-0315-05	CERAMIC FILTER (CFW455F)		
L6			L34-0956-05	COIL		
L7 ,8			L30-0005-05	IFT	MTW	
L7 ,8			L34-2208-05	TUNING COIL	K	
L9			L34-4015-05	COIL (455KHZ)		
L10			L33-0695-05	CHOKE COIL (1MH)		
L11			L40-3982-81	SMALL FIXED INDUCTOR(0.39UH)		
L12			L40-6872-80	SMALL FIXED INDUCTOR(68NH)		
L12 -15		*	L34-4080-05	COIL		
L13			L40-1081-80	SMALL FIXED INDUCTOR(100NH)		
L14			L40-3972-80	SMALL FIXED INDUCTOR(39NH)		
X1			L77-0946-15	CRYSTAL RESONATOR(10.245MHZ)	MTW	
X1		*	L77-1369-05	CRYSTAL RESONATOR(17.355MHZ)	K	
X2			L77-1311-05	CRYSTAL RESONATOR(12.8MHZ)		
XF1			L71-0228-05	MCF (10.7MHZ)	MTW	
XF1		*	L71-0279-05	MCF (16.9MHZ)	K	
R6			RK73FB2A103J	CHIP R 10K J 1/10W		
R7			RK73FB2A274J	CHIP R 270K J 1/10W		
R8			RK73FB2A101J	CHIP R 100 J 1/10W		
R9			RK73FB2A103J	CHIP R 10K J 1/10W		
R10			RK73FB2A101J	CHIP R 100 J 1/10W		
R11 -14			RK73FB2A104J	CHIP R 100K J 1/10W		
R15			RK73FB2A102J	CHIP R 1.0K J 1/10W		
R16 ,17			RK73FB2A473J	CHIP R 47K J 1/10W		
R18			RK73FB2A470J	CHIP R 47 J 1/10W		
R19			RK73FB2A274J	CHIP R 270K J 1/10W		
R20			RK73FB2A470J	CHIP R 47 J 1/10W	MTW	
R22			RK73FB2A222J	CHIP R 2.2K J 1/10W		
R23			RK73FB2A332J	CHIP R 3.3K J 1/10W		
R24			RK73FB2A182J	CHIP R 1.8K J 1/10W	MTW	
R24			R92-0670-05	CHIP R 0 OHM	K	
R25			RK73FB2A101J	CHIP R 100 J 1/10W		
R26			RK73FB2A222J	CHIP R 2.2K J 1/10W	K	
R26			RK73FB2A472J	CHIP R 4.7K J 1/10W	MTW	
R27			RK73FB2A334J	CHIP R 330K J 1/10W		
R28			RK73FB2A102J	CHIP R 1.0K J 1/10W		
R29			RK73FB2A683J	CHIP R 68K J 1/10W		
R31			RK73FB2A333J	CHIP R 33K J 1/10W		
R32			RK73FB2A332J	CHIP R 3.3K J 1/10W		
R33			RK73FB2A682J	CHIP R 6.8K J 1/10W		
R34			RK73FB2A334J	CHIP R 330K J 1/10W		
R35			RK73FB2A392J	CHIP R 3.9K J 1/10W		
R36			RK73FB2A334J	CHIP R 330K J 1/10W		
R37			RK73FB2A392J	CHIP R 3.9K J 1/10W		
R38			RK73FB2A331J	CHIP R 330 J 1/10W		
R39			RK73FB2A103J	CHIP R 10K J 1/10W		
R43			RK73FB2A333J	CHIP R 33K J 1/10W		
R44			RK73FB2A103J	CHIP R 10K J 1/10W		
R45			RK73FB2A473J	CHIP R 47K J 1/10W		
R46			RK73FB2A223J	CHIP R 22K J 1/10W		

E: Scandinavia & Europe **K**: USA **P**: Canada **W**:Europe
U: PX(Far East, Hawaii) **T**: England **M**: Other Areas
UE: AAFES(Europe) **X**: Australia

⚠ indicates safety critical components.

PARTS LIST

* New Parts
Parts without **Parts No.** are not supplied.
Les articles non mentionnes dans le **Parts No.** ne sont pas fournis.
Teile ohne **Parts No.** werden nicht geliefert.

Ref. No. 参照番号	Address 位置	New Parts 新	Parts No. 部品番号	Description 部品名／規格	Destination 仕向	Remarks 備考
R47			RK73FB2A334J	CHIP R 330K J 1/10W		
R48			RK73FB2A223J	CHIP R 22K J 1/10W		
R49			RK73FB2A473J	CHIP R 47K J 1/10W		
R50 ,51			RK73FB2A103J	CHIP R 10K J 1/10W		
R52 ,53			RK73FB2A182J	CHIP R 1.8K J 1/10W		
R54			RK73FB2A103J	CHIP R 10K J 1/10W		
R55 ,56			RK73FB2A473J	CHIP R 47K J 1/10W		
R57			RK73FB2A103J	CHIP R 10K J 1/10W		
R58			RK73FB2A223J	CHIP R 22K J 1/10W		
R59			RK73FB2A222J	CHIP R 2.2K J 1/10W		
R60			RK73FB2A101J	CHIP R 100 J 1/10W		
R61			RK73FB2A334J	CHIP R 330K J 1/10W		
R62			RK73FB2A222J	CHIP R 2.2K J 1/10W		
R63			RK73FB2A101J	CHIP R 100 J 1/10W		
R64			RK73FB2A270J	CHIP R 27 J 1/10W		
R65			RK73FB2A222J	CHIP R 2.2K J 1/10W		
R66			RK73FB2A101J	CHIP R 100 J 1/10W		
R67			RK73FB2A102J	CHIP R 1.0K J 1/10W		
R69			R92-0679-05	CHIP R 0 OHM		
R71 -73			RK73FB2A103J	CHIP R 10K J 1/10W		
R74			RK73FB2A223J	CHIP R 22K J 1/10W		
R75 ,76			RK73FB2A101J	CHIP R 100 J 1/10W		
R77			RK73FB2A222J	CHIP R 2.2K J 1/10W		
R78			RK73FB2A102J	CHIP R 1.0K J 1/10W		
R79			RK73FB2A223J	CHIP R 22K J 1/10W		
R80			RK73FB2A472J	CHIP R 4.7K J 1/10W		
R81			RK73FB2A680J	CHIP R 68 J 1/10W		
R82			RK73FB2A101J	CHIP R 100 J 1/10W		
R84			RK73FB2A152J	CHIP R 1.5K J 1/10W		
R85			RK73FB2A470J	CHIP R 47 J 1/10W		
R86			RK73FB2A100J	CHIP R 10 J 1/10W		
R88 -90			R92-0670-05	CHIP R 0 OHM	K	
R91			RK73FB2A472J	CHIP R 4.7K J 1/10W	K	
R92			RK73FB2A103J	CHIP R 10K J 1/10W	K	
R93			RK73FB2A104J	CHIP R 100K J 1/10W		
R120			RK73FB2A221J	CHIP R 220 J 1/10W	K	
VR1			R12-5424-05	TRIMMING POT. (220K)		
VR2			R12-0439-05	TRIMMING POT. (470)		
VR3			R12-3458-05	TRIMMING POT. (10K)		
D4 -6			1SV164	CHIP DIODE		
D7			1SV166	CHIP DIODE		
D8			1SV164	CHIP DIODE		
D9			1SS184	CHIP DIODE		
D10			HSM88AS	CHIP DIODE		
D11 -14			1SS184	CHIP DIODE		
D15			02CZ6.2(X,Y)	ZENER DIODE (6.2V)		
D16			1SS268	DIODE		
D17			1SS181	CHIP DIODE		
D18			02CZ4.3(X,Y)	ZENER DIODE (4.3V)		
IC1			MC3361D	IC(FM IF SYSTEM)		
IC2			MB3713	IC(AF POWER AMP)		
Q1			3SK184(S)	CHIP FET		
Q2			3SK179(L)	CHIP FET		
Q3			2SC2714(Y)	CHIP TRANSISTOR		

E: Scandinavia & Europe K: USA P: Canada W: Europe
U: PX(Far East, Hawaii) T: England M: Other Areas
UE: AAFES(Europe) X: Australia

⚠ indicates safety critical components.

PARTS LIST

* New Parts
Parts without **Parts No.** are not supplied.
Les articles non mentionnes dans le **Parts No.** ne sont pas fournis.
Teile ohne **Parts No.** werden nicht geliefert.

Ref. No. 参照番号	Address 位置	New Parts 新	Parts No. 部品番号	Description 部品名／規格	Destination 仕向	Remarks 備考
Q4 ,5			2SC2712(Y)	CHIP TRANSISTOR		
Q6			DTC144EK	DIGITAL TRANSISTOR		
Q7 -9			2SC2712(Y)	CHIP TRANSISTOR		
Q10 ,11			2SB1119S	CHIP TRANSISTOR		
Q12			DTC144EK	DIGITAL TRANSISTOR		
Q13 ,14			2SC2714(Y)	CHIP TRANSISTOR		
Q15			2SC2712(Y)	CHIP TRANSISTOR		
Q17			2SC3326(A)	CHIP TRANSISTOR		
Q18 ,19			2SC2714(Y)	CHIP TRANSISTOR		
Q20			2SC2954	CHIP TRANSISTOR		
Q21			2SK208(O)	CHIP FET		
TH1			112-501-2	THERMISTOR (500 OHM)		
IC3		*	W02-0818-05	DC-DC CONVERTER		
		*	X58-3340-00	SUB UNIT (VCO)	MTW	
		*	X58-3340-11	SUB UNIT (VCO)	K	
430 MHz VCO UNIT (X58-3330-00)						
C1			CK73FB1E223K	CHIP C 0.022UF K		
C2			CK73FB1H102K	CHIP C 1000PF K		
C3			CK73FB1E223K	CHIP C 0.022UF K		
C4			CK73FB1E223K	CHIP C 0.022UF K		
C5			CK73EB1H473K	CHIP C 0.047UF K		
C6			CK73FB1E223K	CHIP C 0.022UF K		
C7 ,8			C92-0005-05	CHIP-TAN 2.2UF 6.3WV		
C9			C92-0001-05	CHIP TAN 0.1UF 35WV		
C10			CK73FB1H471K	CHIP C 470PF K		
C11			CK73FB1H103K	CHIP C 0.010UF K		
C12			CK73FB1H102K	CHIP C 1000PF K		
C13 ,14			CC73FCH1H100D	CHIP C 10PF D		
C101			CK73FB1H471K	CHIP C 470PF K		
C102			CC73FCH1H100D	CHIP C 10PF D		
C103			CK73FB1H102K	CHIP C 1000PF K		
C104			CC73FCH1H090D	CHIP C 9.0PF D	K	
C104			CC73FCH1H100D	CHIP C 10PF D	MTW	
C105			CC73FCH1H040C	CHIP C 4.0PF C	K	
C105			CC73FCH1H050C	CHIP C 5.0PF C	MTW	
C106			CC73FCH1H0R5C	CHIP C 0.5PF C		
C107			CC73FCH1H020C	CHIP C 2.0PF C	K	
C107			CC73FCH1H030C	CHIP C 3.0PF C	MTW	
C108			CC73FCH1H090D	CHIP C 9.0PF D		
C109			CC73FCH1H080D	CHIP C 8.0PF D		
C110			CK73FB1H102K	CHIP C 1000PF K		
C111			CC73FCH1H010C	CHIP C 1.0PF C		
C112			CK73FB1H102K	CHIP C 1000PF K		
C113			CK73FB1H471K	CHIP C 470PF K		
TC101,102			C05-0346-05	TRIMMING CAP (6PF)		
CN1		*	E40-5158-05	PIN CONNECTOR (4P RE)		
CN2		*	E40-5159-05	PIN CONNECTOR (7P RE)		
CN101			E40-0611-05	PIN CONNECTOR (6P)		
CN102			E40-0211-05	PIN CONNECTOR (2P)		
A1		*	F11-1089-04	SHIELDING COVER		
L1			L40-3972-80	SMALL FIXED INDUCTOR		
L101,102			L40-2281-80	SMALL FIXED INDUCTOR		

E: Scandinavia & Europe K: USA P: Canada W: Europe
U: PX(Far East, Hawaii) T: England M: Other Areas
UE: AAFES(Europe) X: Australia

⚠ indicates safety critical components.

PARTS LIST

* New Parts
Parts without **Parts No.** are not supplied.
Les articles non mentionnes dans le **Parts No.** ne sont pas fournis.
Teile ohne **Parts No.** werden nicht geliefert.

Ref. No. 参照番号	Address 位置	New Parts 新	Parts No. 部品番号	Description 部品名／規格	Destination 仕向	Remarks 備考
L103		*	L34-2310-05	COIL (5CBL)		
L104			L40-2281-80	SMALL FIXED INDUCTOR		
L105			L40-3982-81	SMALL FIXED INDUCTOR		
R1 -5			RK73FB2A473J	CHIP R 47K J 1/10W		
R6			RK73FB2A221J	CHIP R 220 J 1/10W		
R7			RK73FB2A272J	CHIP R 2.7K J 1/10W		
R8			RK73FB2A822J	CHIP R 8.2K J 1/10W		
R9			RK73FB2A103J	CHIP R 10K J 1/10W		
R10			RK73FB2A222J	CHIP R 2.2K J 1/10W		
R11			RK73FB2A474J	CHIP R 470K J 1/10W		
R12			RK73FB2A103J	CHIP R 10K J 1/10W		
R13			RK73FB2A331J	CHIP R 330 J 1/10W		
R14			RK73FB2A472J	CHIP R 4.7K J 1/10W		
R15			RK73FB2A222J	CHIP R 2.2K J 1/10W		
R16			RK73FB2A103J	CHIP R 10K J 1/10W		
R17			RK73FB2A473J	CHIP R 47K J 1/10W		
R101			R92-0670-05	CHIP R 0 OHM		
R102			RK73FB2A473J	CHIP R 47K J 1/10W		
R103,104			RK73FB2A472J	CHIP R 4.7K J 1/10W		
R105			RK73FB2A822J	CHIP R 8.2K J 1/10W		
R106			RK73FB2A472J	CHIP R 4.7K J 1/10W		
R107			RK73FB2A470J	CHIP R 47 J 1/10W		
R108,109			RK73FB2A101J	CHIP R 100 J 1/10W		
R111			RK73FB2A471J	CHIP R 470 J 1/10W		
D101,102			1SV164	VARI-CAP DIODE		
D103			HSK277	DIODE		
D104			1SV164	VARI-CAP DIODE		
IC1			M54959FP	IC(FREQ SYNTHESIZER PLL)		
Q1 -3			2SC3324(B)	CHIP TRANSISTOR		
Q4			2SC3120	CHIP TRANSISTOR		
Q101			2SK508(K52)	CHIP FET		
Q102			2SC3120	CHIP TRANSISTOR		
Q103			2SC2712(Y)	CHIP TRANSISTOR		
144 MHz VCO UNIT (X58-3340-00)						
C1			CK73FB1E223K	CHIP C 0.022UF K		
C2			CK73FB1H102K	CHIP C 1000PF K		
C3			CK73FB1E223K	CHIP C 0.022UF K		
C4			CK73EB1E104K	CHIP C 0.10UF K	K	
C4			CK73EB1E683K	CHIP C 0.068UF K	MTW	
C5			CC73FSL1H101J	CHIP C 100PF J		
C6			CK73FB1E223K	CHIP C 0.022UF K		
C7			CK73FB1H471K	CHIP C 470PF K		
C8 ,9			C92-0007-05	CHIP TAN 2.2UF 20WV		
C10			CK73FB1H102K	CHIP C 1000PF K		
C11			C92-0003-05	CHIP TAN 0.47UF 25WV		
C12			CK73FB1H103K	CHIP C 0.010UF K		
C13			CK73FB1H102K	CHIP C 1000PF K		
C14			CC73FCH1H050C	CHIP C 5.0PF C		
C15			CK73FB1H102K	CHIP C 1000PF K		
C101			CK73FB1H102K	CHIP C 1000PF K		
C102			CK73FB1H472K	CHIP C 4700PF K		
C103			CK73FB1H102K	CHIP C 1000PF K		
C104			CC73FCH1H0R5C	CHIP C 0.5PF C		
C105,106			CK73FB1H472K	CHIP C 4700PF K		

E: Scandinavia & Europe K: USA P: Canada W: Europe
U: PX(Far East, Hawaii) T: England M: Other Areas
UE: AAFES(Europe) X: Australia

⚠ indicates safety critical components.

PARTS LIST

⁎ New Parts
Parts without **Parts No.** are not supplied.
Les articles non mentionnes dans le **Parts No.** ne sont pas fournis.
Teile ohne **Parts No.** werden nicht geliefert.

Ref. No. 参照番号	Address 位置	New Parts 新	Parts No. 部品番号	Description 部品名／規格	Destination 仕向	Remarks 備考
C107-109			CK73FB1H102K	CHIP C 1000PF K		
C110			CC73FCH1H010C	CHIP C 1.0PF C		
C111			CC73FCH1H220J	CHIP C 22PF J		
CN1			E40-5158-05	PIN CONNECTOR (4P RE)		
CN2			E40-5159-05	PIN CONNECTOR (7P RE)		
CN101			E40-0611-05	PIN CONNECTOR (6P)		
CN102			E40-0211-05	PIN CONNECTOR (2P)		
A1			F11-1089-04	SHIELDING COVER		
L1			L40-3391-19	SMALL FIXED INDUCTOR		
L101-103			L40-3391-19	SMALL FIXED INDUCTOR		
L104			L34-2311-05	COIL (5 CBL)	MTW	
L104			L34-2312-05	COIL (5 CBL)	K	
L105			L40-1581-80	SMALL FIXED INDUCTOR		
R1 -5			RK73FB2A473J	CHIP R 47K J 1/10W		
R6			RK73FB2A223J	CHIP R 22K J 1/10W		
R7			RK73FB2A472J	CHIP R 4.7K J 1/10W		
R8			RK73FB2A473J	CHIP R 47K J 1/10W		
R9			RK73FB2A102J	CHIP R 1.0K J 1/10W	K	
R9			RK73FB2A472J	CHIP R 4.7K J 1/10W	MTW	
R10			RK73FB2A682J	CHIP R 6.8K J 1/10W	K	
R10 ,11			RK73FB2A103J	CHIP R 10K J 1/10W	MTW	
R11			RK73FB2A103J	CHIP R 10K J 1/10W	KTW	
R12			RK73FB2A472J	CHIP R 4.7K J 1/10W		
R13			R92-0670-05	CHIP R 0 OHM		
R14			RK73FB2A221J	CHIP R 220 J 1/10W		
R15			RK73FB2A223J	CHIP R 22K J 1/10W		
R16			RK73FB2A103J	CHIP R 10K J 1/10W		
R17			R92-0670-05	CHIP R 0 OHM		
R101			RK73FB2A103J	CHIP R 10K J 1/10W	MTW	
R101			RK73FB2A822J	CHIP R 8.2K J 1/10W	K	
R102-104			RK73FB2A470J	CHIP R 47 J 1/10W		
R105			R92-0670-05	CHIP R 0 OHM		
R106			RK73FB2A101J	CHIP R 100 J 1/10W		
R107			RK73FB2A472J	CHIP R 4.7K J 1/10W		
R108			RK73FB2A561J	CHIP R 560 J 1/10W		
R109			RK73FB2A101J	CHIP R 100 J 1/10W		
R110			RK73FB2A470J	CHIP R 47 J 1/10W		
D101,102			1SV166	VARI-CAP DIODE		
IC1			M54959FP	IC(FREQ SYNTHESIZER PLL)		
Q1			DTC144EK	DIGITAL TRANSISTOR		
Q2			2SC2712(Y)	CHIP TRANSISTOR		
Q3 ,4			2SC3324(B)	CHIP TRANSISTOR		
Q5			2SC2714(Y)	CHIP TRANSISTOR		
Q101			2SK508(K52)	CHIP FET		
Q102			2SC2714(Y)	CHIP TRANSISTOR		

E: Scandinavia & Europe **K**: USA **P**: Canada **W**:Europe
U: PX(Far East, Hawaii) **T**: England **M**: Other Areas
UE: AAFES(Europe) **X**: Australia

⚠ indicates safety critical components.

EXPLODED VIEW

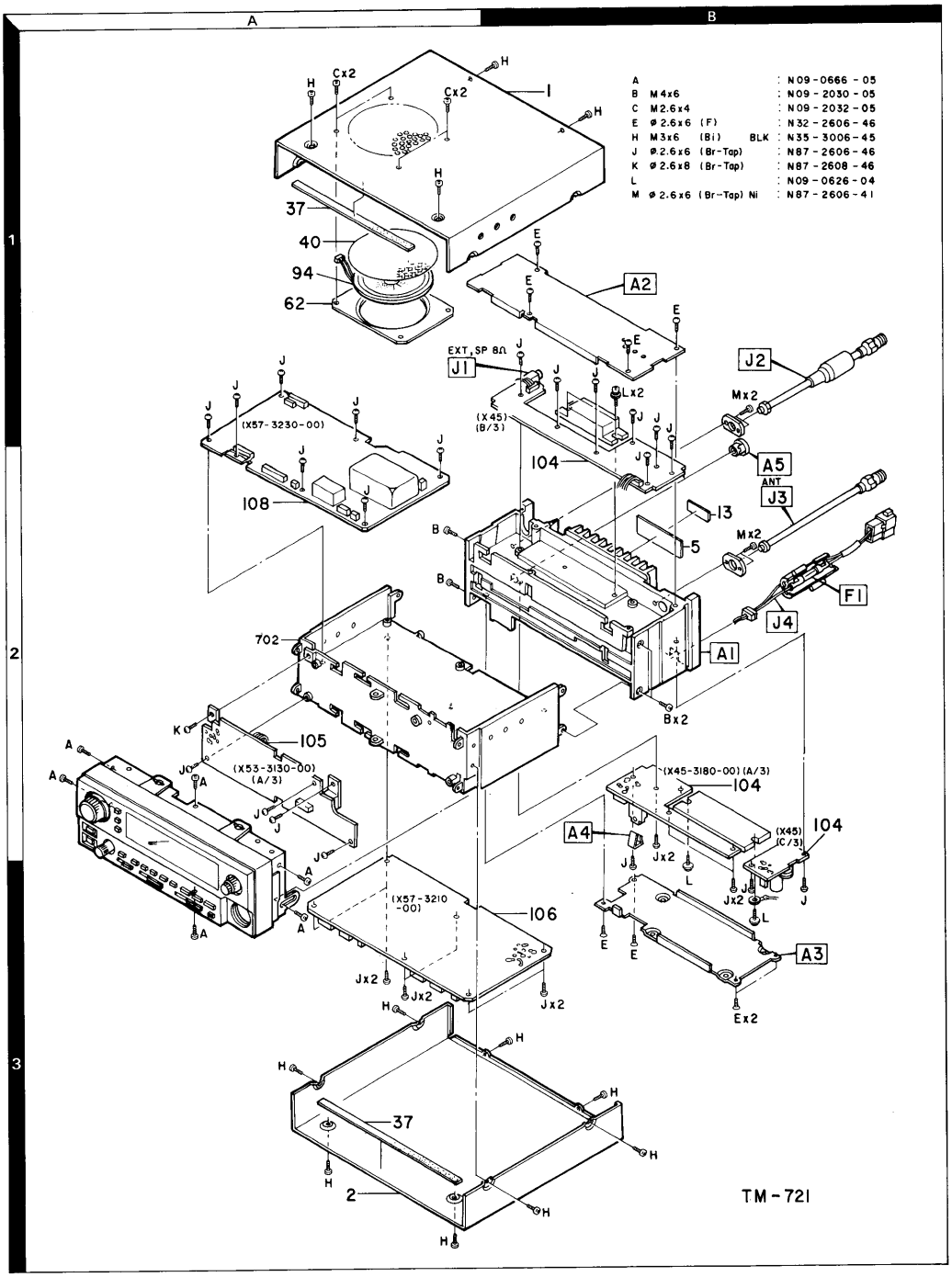

EXPLODED VIEW

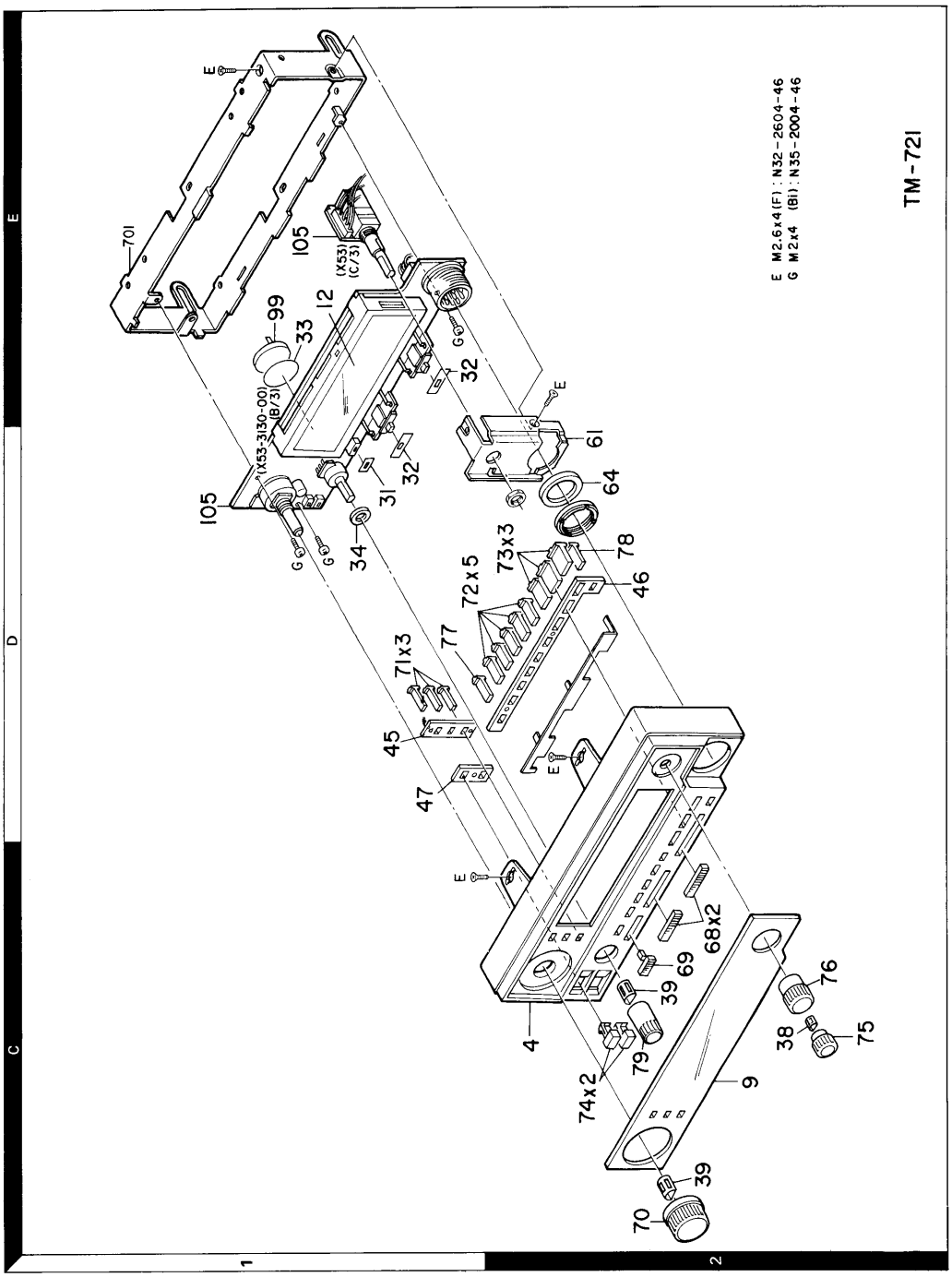

PACKING

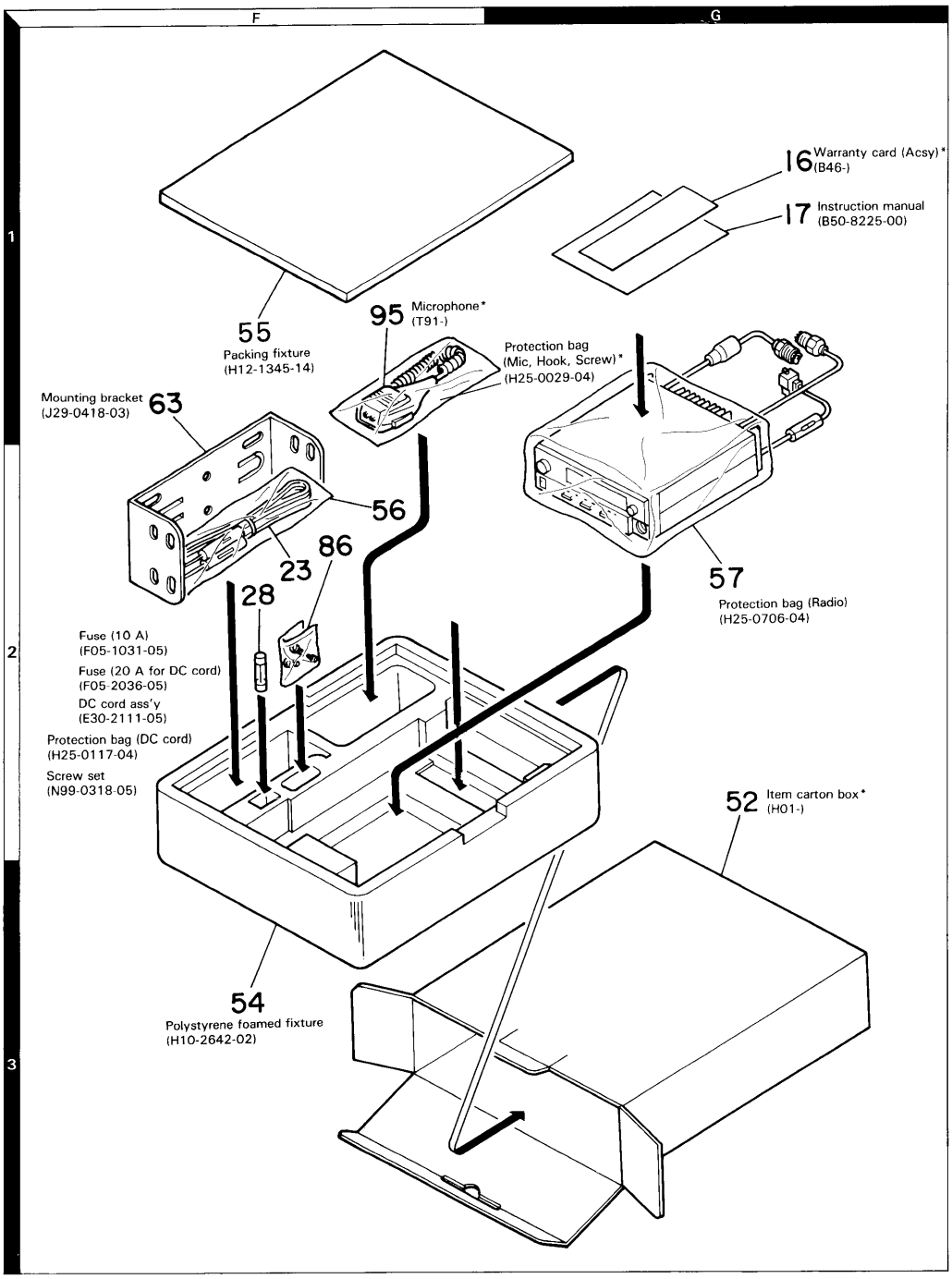
F
G
1
2
3
16 Warranty card (Acsy)* (B46-)
17 Instruction manual (B50-8225-00)
55
Packing fixture
(H12-1345-14)
95 Microphone* (T91-)
Protection bag
(Mic, Hook, Screw)*
(H25-0029-04)
Mounting bracket
(J29-0418-03)
63
56
86
23
28
57
Protection bag (Radio)
(H25-0706-04)
Fuse (10 A)
(F05-1031-05)
Fuse (20 A for DC cord)
(F05-2036-05)
DC cord ass'y
(E30-2111-05)
Protection bag (DC cord)
(H25-0117-04)
Screw set
(N99-0318-05)
52 Item carton box* (H01-)
54
Polystyrene foamed fixture
(H10-2642-02)

ADJUSTMENT

REQUIRED TEST EQUIPMENT

1. **DC V.M**
   1) High input impedance
2. **RF VTVM (RF V.M)**
   1) Input impedance : 1 MΩ min., 2 pF max.
   2) Voltage range : F.S = 10 mV ~ 300 V
3. **Frequency Counter (f. counter)**
   1) Input sensitivity : Approx. 50 mV
   2) Frequency range : Up to 450 MHz
4. **DC Power Supply**
   1) Voltage : 10 V ~ 17 V, variable
   2) Current : 15 A min.
5. **Power Meter**
   1) Measurement range Approx. : 50 W, 3 W, 1 W
   2) Input impedance : 50 Ω
   3) Frequency range : 450 MHz
6. **AF VTVM (AF V.M)**
   1) Input impedance : 1 MΩ min.
   2) Voltage range : F.S = 1 mV ~ 30 V
   3) Frequency range : 50 Hz ~ 10 kHz
7. **AF Generator (AG)**
   1) Output frequency : 100 Hz ~ 10 kHz
   2) Output voltage : 0.5 mV ~ 1 V
8. **Linear Detector**
   1) Frequency range : 450 MHz
9. **Field Strength Meter**
   1) Frequency range : 450 MHz
10. **Directional Coupler**
11. **Oscilloscope**
    1) High sensitivity oscilloscope with horizontal input terminal
12. **SSG**
    1) Frequency range : 144 MHz and 430 MHz bands
    2) Modulation : AM and FM MOD.
    3) Output level : −20 dB to 100 dB
13. **Dummy Load**
    1) 8 Ω, 50 W (approx.)
14. **Noise Generator**
    1) Must generate ignition-like noise containing harmonics beyond 450 MHz.
15. **Sweep Generator**
    1) Sweep range : 1440 MHz and 430 MHz bands
16. **Tracking Generator**

PREPARATION

1) Unless otherwise specified, knobs and switches should be set as follows **Table 7**.

POWER SW	ON	SUB SQ VR	OFF
AF VOL VR	MIN	SCAN/L. OUT	OFF
MAIN SQ VR	MIN	SHIFT/AL	OFF
LOW SW	HI	TONE/T. SEL	OFF
CALL SW	OFF	REV/STEP	OFF
VFO SW	ON	MUTE/CTCSS	OFF
F. LOCK SW	OFF	A, B, C	OFF
BALANCE VR	MAIN	DUAL SW	OFF
		BAND ACC	OFF

Table 7

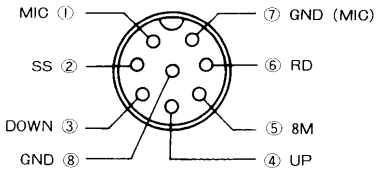

Fig. 26 MIC terminals (view from front panel side)

2) Use an insulated adjusting rod to adjust trimmers and coils.
3) To prevent damaging SSG, never connect the microphone to mic jack while adjusting the receiver section.
4) Be sure to turn the power switch OFF, before connecting the power cable to a power source.
5) SSG output levels are those at the time the output terminal is open.
6) Meter and display section should be set as follows **Fig. 15**.

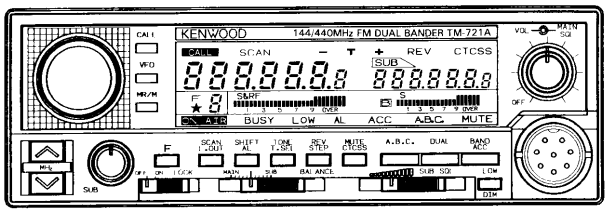

Fig. 27

ADJUSTMENT

Common Section Adjustments

Item	Condition	Measurement			Adjustment			Specification/Remarks
		Test equipment	Unit	Terminal	Unit	Part	Method	
1. Setting	DC 13.8 V POWER OFF MAIN SQL. MIN. BALANCE CENTER SUB SQL. MAX. LOCK OFF * Standard modulation (MOD. 1 kHz, DEV. ±3 kHz) when modulation of SSG is not specified.							
2. Reset	Turn POWER ON while pressing F key							MAIN 433.000 (M,T,W) 440.000 (K)
								SUB 144.000
	DUAL PUSH							

PLL Adjustments

Item	Condition	Measurement			Adjustment			Specification/Remarks
		Test equipment	Unit	Terminal	Unit	Part	Method	
1. VCO voltage	FREQ. 439.975 MHz (M,T,W), 449.975 MHz (K) (for both transmission and reception)	Digital voltmeter Dummy load × 2	TX-RX (430)	TP3	TX-RX (430)	Transmission TC101	6.0 V	6.0 ± 0.2 V
						Reception TC102		
	FREQ. 145.975 MHz (M,T,W), 147.995 MHz (K) (for both transmission and reception)		TX-RX (144)	TP2				3.5 ± 0.5 V (M,T,W) 4.2 ± 0.5 V (K)

144 MHz Receiver Adjustments

Item	Condition	Measurement			Adjustment			Specification/Remarks
		Test equipment	Unit	Terminal	Unit	Part	Method	
1. Receiving sensitivity	FREQ. 145.950 MHz (T,W) 146.040 MHz (K,M) SSG 0 dBμ MOD : OFF	Tester	TX-RX (144)	TP1	TX-RX (144)	L2,3,4 5,6,7,8	MAX.	
2. Discriminator	FREQ. 145.050 MHz (T,W) 146.040 MHz (K,M) SSG 0 dBμ	Oscilloscope, Millivoltmeter Dummy load (8 ohms)	Rear	ANT2	TX-RX (144)	L9	AF indication max.	Maximum sensitivity: 4 V or more.
3. Squelch (Tight squelch)	FREQ. 145.050 MHz (T,W) 146.040 MHz (K,M) MAIN SQL. MAX. SSG −6 dBμ	Oscilloscope, Millivoltmeter Dummy load (8 ohms)	ANT2	TX-RX	VR1 (144)		Set to the position where noise is not heard.	
	SSG −4 dB							Squelch should be opened.
	SSG OFF Rotate SGL to the position where noise is not heard.							8:00 – 9:30
	SSG −14 dBμ							Squelch should be opened.

ADJUSTMENT

Item	Condition	Measurement			Adjustment			Specification/Remarks
		Test equipment	Unit	Terminal	Unit	Part	Method	
4. S-meter	FREQ. 145.050 MHz (T,W) 146.040 MHz (K,M) SSG −3 dBμ	SSG SP	Rear panel, Front panel	TX-RX (144)	TX-RX (144)	VR2	Set to to S.1 position.	
	SSG 30 dBμ							All LED light up.
5. Receiving sensitivity	145.050 MHz (T,W) 146.040 MHz (K,M) SSG −10 dBμ	Oscilloscope Millivoltmeter Distortion meter						SINAD 12 dB or more
	Adjust the band edge in the same way. FREQ. 144.050 MHz, 145.950 MHz (T,W) 144.040 MHz, 147.940 MHz (K,M)							
6. Signal-to-noise (S/N) ratio with high-level signal	145.050 MHz (T,W) 146.040 MHz (K,M) SSG 60 dBμ AF 0.63 V/8 Ω							S/N ratio of 46 dB or better

Common Transmitter Adjustments

Item	Condition	Measurement			Adjustment			Specification/Remarks
		Test equipment	Unit	Terminal	Unit	Part	Method	
Transmission frequency	435.000 MHz (M,T,W) 445.000 MHz (K) LO : ON Make transmission.	F.counter Dummy load	Rear panel	ANT2	TX-RX (144)	TC1	435.000 MHz (M,T,W) 445.000 MHz (K)	±100 Hz

144 MHz Transmitter Adjustments

Item	Condition	Measurement			Adjustment			Specification/Remarks
		Test equipment	Unit	Terminal	Unit	Part	Method	
1-1. Transmission output (HI power)	FREQ. 144.975 MHz (T,W) 146.000 MHz (K,M) HI/LO switch: HI Make transmission.	Power meter Ammeter (Use DC power supply having ammeter)	Rear panel	ANT1 (144)	Final (144)	VR2	POWER MAX.	50 W or more
							46 W	40 W ±1 W, less than 8.5 A
1-2. Transmission output (LO power)	FREQ. 144.975 MHz (T,W) 146.000 MHz (K,M) HI/LO switch : LO (When "LOW" appears on the display, start transmitting.)				Final (144)	VR4	5 W	Check ±0.5 W
	FREQ. 144.000 MHz, 145.975 MHz (T,W) 144.000 MHz, 147.980 MHz (K,M) HI/LO switch : HI Make transmission.							44−52 W, less than 6.5 A
2. RF meter	FREQ. 144.975 MHz (T,W) 146.000 MHz (K,M) Make transmission.	Power meter or dummy load (50 ohms)	TX-RX (144)	TP1	Final (144)	VR1	1.5 V	±0.1 V

ADJUSTMENT

Item	Condition	Measurement				Adjustment		Specification/Remarks
		Test equipment	Unit	Terminal	Unit	Part	Method	
3-1. DEV	FREQ. 144.975 MHz (T,W) 146.000 MHz (K,M) AG 1 kHz, 60 mV Make transmission.	Linear detector Dummy (50 ohms) Divider Oscilloscope	Rear	ANT1 (144)	TX-RX (144)	VR3	±4.6 kHz (either + or − value which is larger)	±200 Hz There should be no abnormal within detecting range. Linear detector condition: LPF: OFF HPF: 20 kHz Deemphasis: OFF
3-2. MIC GAIN	AG 1 kHz 6 mV Make transmission.							±2.4 kHz– ±3.6 kHz Check above
4. Protection (CURRENT)	FREQ. 144.975 MHz (T,W) 146.000 MHz (K,M) ANT open Make transmission	Ammeter			Final (144)	VR3	5.5 A	±0.2 A
5. TONE	FREQ. 145.100 MHz (K,M) Make transmission	Linear detector, Dummy load (50 ohms)		ANT (144)			f: 88~89 Hz DEV.: ±0.5~1 kHz Linear detector condition	LPF : 3 kHz HPF : 20 kHz Deemphasis : OFF
	FREQ. 145.100 MHz (T) Make transmission Tone push (W)						f:1750 Hz ±10 Hz DEV. ±2.5 kHz or more	

430 MHz Receiver Adjustments

Item	Condition	Measurement				Adjustment		Specification/Remarks
		Test equipment	Unit	Terminal	Unit	Part	Method	
1. BPF (430 MHz) (440 MHz)	FREQ. 435.050 (T,W) 445.050 (K,M) Connect a sweep generator or tracking generator to ANT1 (430 MHz, ANT terminal) Connect spectrum analyzer to the test point (TP1).	Tracking generator		ANT1	TX-RX (430)	TC1,2 L3,4	The specified range should be secured with the GAIN set to MAX position.	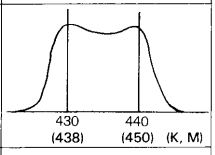
		Spectrum analyzer	TX-RX (430)	TP1				
2. Receiving sensitivity	FREQ. 435.050 MHz (M,T,W) 445.050 MHz (K) SSG 0 dBμ MOD : OFF	Tester	TX-RX (430)	TP2	TX-RX (430)	TC3 L8, 9	MAX.	
3. Discriminator	FREQ. 435.050 MHz (M,T,W) 445.050 MHz (K) SSG 0 dBμ	Oscilloscope Millivoltmeter	Rear panel	EXT. SP	TX-RX (430)	L11	MAX.	
4. Squelch (tight squelch)	FREQ. 435.050 MHz (M,T,W) 445.050 MHz (K) MAIN SQL. MAX. SSG −5 dBμ	Oscilloscope Millivoltmeter		EXT. SP	TX-RX (430)	VR1	Set to the position where noise is not heard.	
	SSG −4 dBμ							Squelch open
	SSG OFF Rotate SQL to set to the position where noise is not heard.							8:00~9:30
S-meter	FREQ. 435.050 MHz (M,T,W) 445.050 MHz (K) SSG −4 dBμ	SSG SP	Rear panel Front panel	ANT1 S-meter	TX-RX (430)	VR2	Set to S1.	
	SSG 20 dBμ							All LED light up.
Sensitivity	FREQ. 435.050 MHz (M,T,W) 445.050 MHz (K) SSG −10 dBμ	Oscilloscope Millivoltmeter Distortion meter		SP				12 dB SINAD or more
	Set the band edge in the same way. FREQ. 430.050 MHz, 439.950 MHz (M,T,W) 438.050 MHz, 449.950 MHz (K)							

ADJUSTMENT

Item	Condition	Measurement			Adjustment			Specification/Remarks
		Test equipment	Unit	Terminal	Unit	Part	Method	
7. Signal-to-noise (S/N) ratio with high level input	FREQ. 435.050 MHz (M,T,W) 445.050 MHz (K) SSG 60 dBμ AF 0.63 V/8 Ω	Oscilloscope Millivoltmeter Distortion meter		SP				S/N ratio of 46 dB or better

430 MHz Transmission Adjustments

Item	Condition	Measurement			Adjustment			Specification/Remarks
		Test equipment	Unit	Terminal	Unit	Part	Method	
1-1. Transmission output (HI power)	FREQ. 435.000 MHz (M,T,W) 445.000 MHz (K) HI/LO switch : HI Make transmission.	Power meter Ammeter (Use DC power supply having ammeter)	Rear panel	ANT1 (430)	TX-RX (430MHz)	VR5	POWER MAX.	40 W or more
							36 W	36 W ±1 W, less than 8.5 A
1-2. Transmission output (LO power)	FREQ. 435.000 MHz (M,T,W) 445.000 MHz (K) HI/LO switch : LO ("LOW" is shown on the display)				TX-RX (430MHz)	VR7	5 W	Check 5 W ±0.5 W
	FREQ. 430.000 MHz, 439.975 MHz (M,T,W); 438.000 MHz, 449.975 MHz (K) HI/LO switch : HI Make transmission.							34—40 W, less than 8.5 A
2. RF meter	FREQ. 435.000 MHz (M,T,W) 445.000 MHz (K) Make transmission.	Digital voltmeter	TX-RX (430)	TP2	TX-RX (430)	VR6	1.5 V (TM-721S)	1.5 V ±0.1 V
3. DEV	FREQ. 435.000 MHz (M,T,W) 445.000 MHz (K) AG 1 kHz, 60 mV Make transmission	Direct dummy (0 ohms) oscilloscope Divider	Rear	ANT	TX-RX (430)	VR3	±4.6 kHz (either + or − value which is larger)	±200 Hz There should be no abnormality in detection waveforms. Direct condition LPF : OFF HPF : 20 kHz Deemphasis : OFF
3-2. MIN BAIN	AG 1 kHz 6 mV Make transmission							±2.4 kHz ~ ±3.6 kHz
4. Protection	FREQ. 435.000 MHz (M,T,W) 445.000 MHz (K) ANT short Make transmission	Ammeter			TX-RX (430)	VR4	4.5 A (M,T,W) 3.5 A (K)	±0.2 A
5. TONE	1) 435.100 MHz (M,W) 445.100 MHz (K) Make transmission	Direct Dummy load (50 ohms) Oscilloscope	Rear panel	ANT			f: 88 ~ 89 MHz DEV.: ±0.6 ~ 1 kHz Linear detector condition	LPF : 50 MHz HPF : 3 kHz Deemphasis : OFF
	2) 435.100 MHz (T) Make transmission 3) 435.100 MHz (W) Tone push: ON						f : 1750 Hz ±10 Hz DEV.: ±2.5 kHz or more	

ADJUSTMENT

Top of the Set

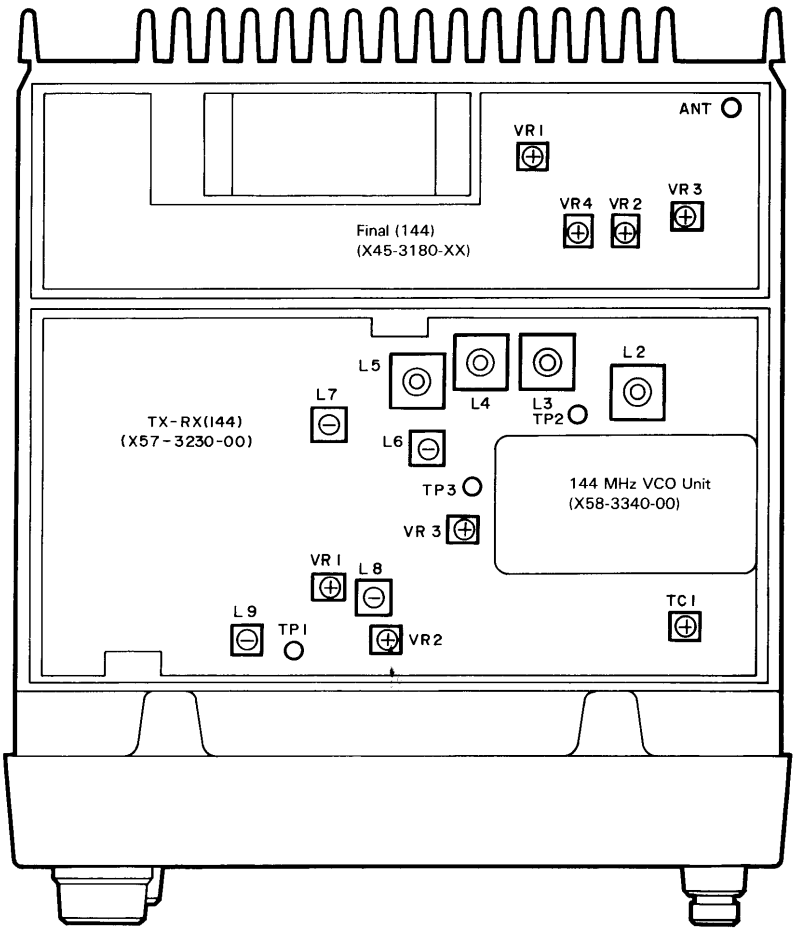

Final Unit (X45-3180-XX)

VR1 : 144 MHz RF meter adjustment
VR2 : 144 MHz HI power (APC) adjustment
VR3 : 144 MHz protection adjustment
VR4 : 144 MHz LOW power adjustment

TX-RX Unit (144 MHz)
(X-57-3230-00)

VR1 : 144 MHz squelch (tight squelch) adjustment
VR2 : 144 MHz S-meter adjustment
VR3 : 144 MHz DEV. adjustment
TC1 : TX f.adjustment
L2 ~ 8 : 144 MHz receiving gain adjustment
L9 : Discriminator adjustment

ADJUSTMENT

Bottom of the Set

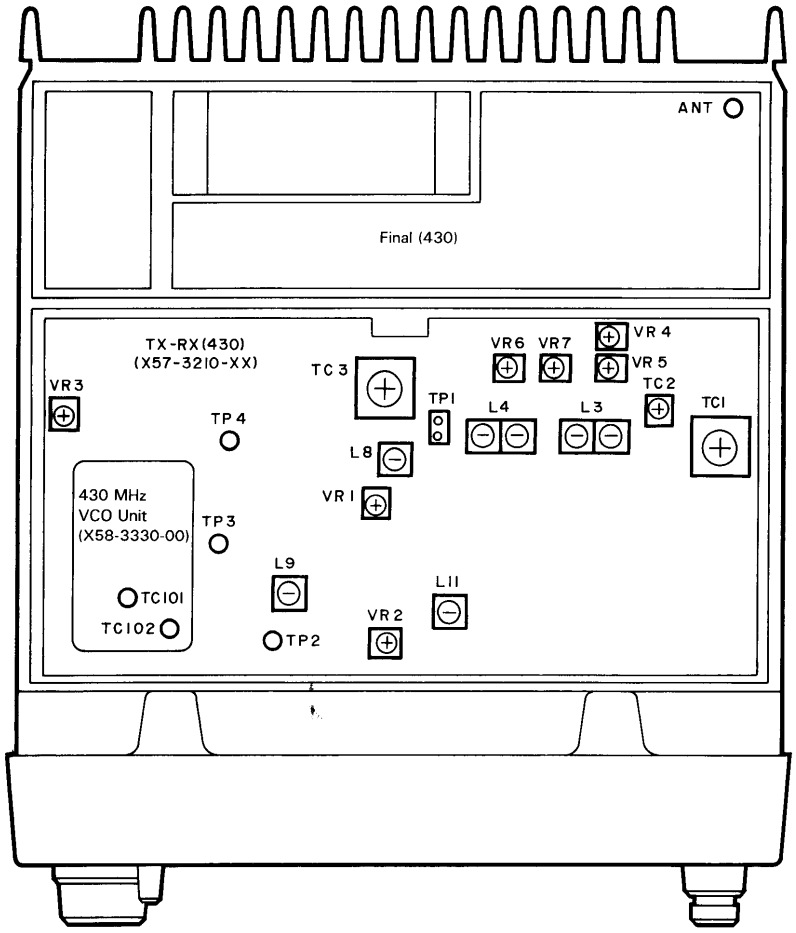

TX-RX unit (430 MHz)

VR1 : 430 MHz squelch (tight squelch) adjustment
VR2 : 430 MHz S-meter adjustment
VR3 : 430 MHz DEV. adjustment
VR4 : 430 MHz protection adjustment
VR5 : 430 MHz HI power adjustment
VR6 : 430 MHz RF meter adjustment

VR7 : 430 MHz LOW power adjustment
L3, 4 : 430 MHz helical adjustment
L8, 9 : 430 MHz receiving gain adjustment
L11 : 430 MHz discriminator adjustment
TC1,2 : 430 MHz helical adjustment
TC3 : 430 MHz receiving gain adjustment

TERMINAL FUNCTIONS

Connector No.	Terminal No.	Terminal name	Funtion
430 MHz TX-RX UNIT (X57-3210-XX)			
CN1		RA1	RX ANT (430MHz)
		E	GND
CN2	1	E	GND
	2	DET	Detect (144MHz)
CN3	1	SC1	SCAN Control (Main)
	2	RD	Remote Data
	3	E	GND
	4	SC2	SCAN Control (SUB)
	5	SQ2	Squelch Volume (SUB)
CN4	1	SDT	Sub Band Data
	2	E	GND
	3	SEL	MAIN SUB Select
	4	SQ1	Squelch Volume (Main)
	5	BAL	Balance Volume
	6	AV	Audio Volume
	7	E	GND
	8	AO	Audio Output
CN5	1	MU1	Mute 1 (MAIN)
	2	MU2	Mute 2 (SUB)
	3	MU3	Mute 3 (SUB)
CN6	1	MD1	Modulation (430MHz)
	2	E	GND
	3	DP1	PLL Data (430MHz)
	4	CP1	PLL Clock (430MHz)
	5	EP1	PLL Enable (430MHz)
CN7	1	E	GND
	2	SF	Standard Freq'
CN8		DO1	Drive Out (430MHz)
		E	GND
CN9	1	ST1	Stanby (430MHz)
	2	E	GND
	3	LOW	Low Power Switch
	4	M1	Meter (430MHz)
	5	CSB	Common Switched +B
	6	8C	Common +8V
CN10	1	DB	Drive +B
	2	8T2	TX +8V (144MHz)
	3	E	GND
	4	PC2	Power Control (144MHz)
	5	LOW	Low Power Switch
CN11	1	PC1	Power Control (430MHz)
	2	PRO	Protection
	3	E	GND
	4	8T1	TX +8V (430MHz)
	5	BA	Base
	6	DB	Drive +B

Connector No.	Terminal No.	Terminal name	Funtion
144 MHz TX-RX UNIT (X57-3230-XX)			
CN1	1	E	GND
	2	RA4	RX ANT (DW-1)
CN2	1	E	GND
	2	RA2	RX ANT (144MHz)
	3	E	GND
CN3	1	RM2	RF Meter (144MHz)
	2	8T2	TX +8V (144MHz)
CN4	1	DO2	Drive Out (144MHz)
	2	E	GND
	3	SP	Speaker
	4	AP	Audio Power Output
	5	E	GND
CN5	1	E	GND
	2	SP	Speaker
CN6	1	CSB	Common Switched +B
	2	AI	Audio IN
	3	E	GND
	4	8C	Common +8V
	5	ST2	Stanby (144MHz)
	6	M2	Meter (144MHz)
CN7	1	E	GND
	2	DET	Detect (144MHz)
CN8	1	MD2	Modulation (144MHz)
	2	DP2	PLL Data (144MHz)
	3	CP2	PLL Clock (144MHz)
	4	EP2	PLL Enable (144MHz)
CN9	1	E	GND
	2	SF	Standard Freq'
CONTROL UNIT (X53-3130-XX)			
CN1	1	B	+B (13.8V)
	2	CSB	Common Switched +B
	3	AV2	Audio Volume 2
	4	8C	Common +8V
	5	SQ1	Squelch Vol. (MAIN)
	6	E	GND
CN2	1	EP2	PLL Enable (144MHz)
	2	CP2	PLL Clock (144MHz)
	3	DP2	PLL Data (144MHz)
	4	E	GND
	5	MD2	Modulation (144MHz)
CN3	1	CSB	Common Switched +B
	2	AI	Audio Input
	3	E	GND
	4	8C	Common +8V
	5	ST2	Stanby (144MHz)
	6	M2	Meter (144MHz)

TERMINAL FUNCTIONS

Connector No.	Terminal No.	Terminal name	Funtion
CN4	1	RD	Remote Data (Main)
	2	E	GND
	3	E	GND
	4	MIC	MIC AF Input
	5	TO	Tone Input
CN5	1	BZ	Beep
	2	SC1	Squelch Control (MAIN)
	3	SDO	Signaling Data Out
	4	SC2	Scan Control (SUB)
	5	BAL	Balance Volume
	6	SQ2	Squelch Volume (SUB)
	7	INH	Inhibit (SUB)
	8	M1	Meter (MAIN)
	9	M2	Meter (SUB)
	10	E	GND
	11	5C	Common +5V
	12	8C	Common +8V
CN6	1	LB	Lamp +B
	2	E	GND
	3	P90	Port P90
	4	P82	Port P82
	5	DS	Shift Register Data
	6	CS	Shift Register Clock
	7	ES	Shift Register Enable
	8	ET	Tone Enable
	9	CP	PLL Clock
	10	DP	PLL Data
	11	EP1	PLL Enable (430MHz)
	12	EP2	PLL Enable (144MHz)
CN101	1	BZ	Beep
	2	SC1	Squelch Control (MAIN)
	3	SDO	Signaling Data Out
	4	SC2	Scan Control (SUB)
	5	BAL	Balance Volume
	6	SQ2	Squelch Volume (SUB)
	7	INH	Inhibit (SUB)
	8	M1	Meter (MAIN)
	9	M2	Meter (SUB)
	10	E	GND
	11	5C	Common +5V
	12	8C	Common +8V

Connector No.	Terminal No.	Terminal name	Funtion
CN102	1	LB	Lamp +B
	2	E	GND
	3	P90	Port P90
	4	P82	Port P82
	5	DS	Shift Register Data
	6	CS	Shift Register Clock
	7	ES	Shift Register Enable
	8	ET	Tone Enable
	9	CP	PLL Clock
	10	DP	PLL Data
	11	EP1	PLL Enable (430MHz)
	12	EP2	PLL Enable (144MHz)
W1	1	E	GND
	2	B	+B (13.8V)
W2	1	MD1	Modulation (430MHz)
	2	E	GND
	3	DP1	PLL Data (430MHz)
	4	CP1	PLL Clock (430MHz)
	5	EP1	PLL Enable (430MHz)
W3	1	ST1	Stanby (430MHz)
	2	E	GND
	3	LOW	Low Power Switch
	4	M1	Meter (MAIN)
	5	CSB	Common Switched +B
	6	8C	Common +8V
W4	1	SQ2	Squelch Volume (SUB)
	2	SC2	Scan Control (SUB)
	3	E	GND
	4	RD	Remote Data (MAIN)
	5	SC1	Squelch Control (MAIN)
W5	1	SDT	Sub Band Data
	2	E	GND
	3	SEL	MAIN SUB Select
	4	SQ1	Squelch Volume (MAIN)
	5	BAL	Balance Volume
	6	AV	Audio Volume
	7	E	GND
	8	AO	Audio Output
W6	1	MU3	Mute 3 (SUB)
	2	MU2	Mute 2 (SUB)
	3	MU1	Mute 1 (MAIN)
W7	1	E	GND
	2	CI	CTCSS IN
	3	5C	Common +5V
	4	E	GND
	5	SDO	Signaling Data Out
	6	CT	Tone Clock
	7	DT	Tone Data
	8	ET	Tone Enable

TERMINAL FUNCTIONS

Connector No.	Terminal No.	Terminal name	Funtion
W101	1	TO	Tone Input
	2	MIC	MIC AF Input
	3	E	GND
	4	E	GND
	5	RD	Remote Data (Main)
W201	1	B	+B (13.8V)
	2	CSB	Common Switched +B
	3	AV2	Audio Volume 2
	4	8C	Common +8V
	5	SQ1	Squelch Control (MAIN)
	6	E	GND
FINAL UNIT (X45-3180-XX)			
CN1	1	E	GND
	2	B	+B (13.8V)
CN2		RA3	RX ANT (DW-1)
		E	GND
W1		FB	FINAL +B
W5	1	DB	Drive +B
	2	8T2	TX +8V (144MHz)
	3	8T2	TX +8V (144MHz)
	4	E	GND
	5	RA2	RX ANT (144MHz)
	6	E	GND
	7	RM2	RF Meter (144MHz)
	8	PC2	Power Control (144MHz)
	9	LOW	Low Power Switch
W6	1	DO2	Drive Out (144MHz)
	2	E	GND
	3	SP	Speaker
	4	AP	Audio Power Output
	5	E	GND
W7	1	DB	Drive +B
	2	BA	Base
	3	8T1	TX +8V (430MHz)
	4	E	GND
	5	PRO	Protection
	6	PC1	Power Control (430MHz)
W8		DO1	Drive Out (430MHz)
		E	GND

TM-721A/E SCHEMATIC DIAGRAM/PC BOARD VIEW

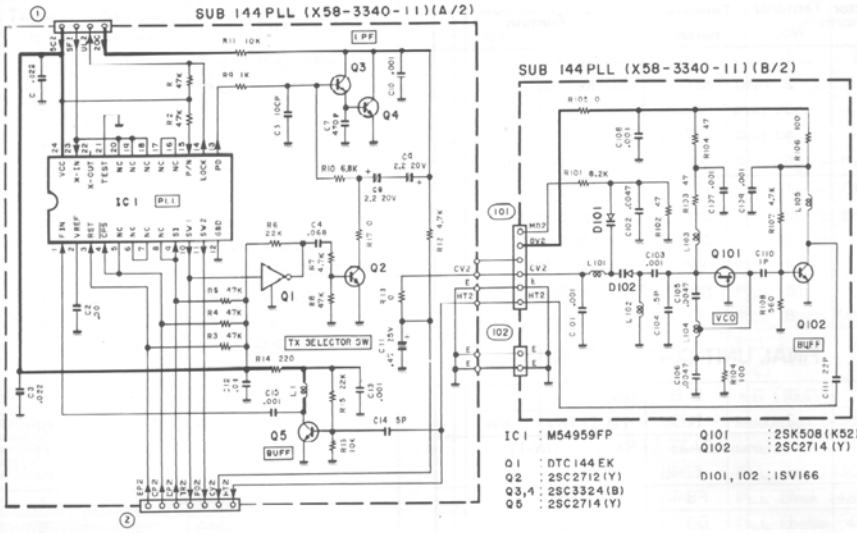

▼144 MHz VCO UNIT A (X58-3340-00)
[Component side view]

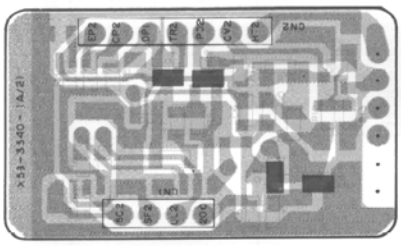

▼144 MHz VCO UNIT A (X58-3340-00)
[Foil side view]

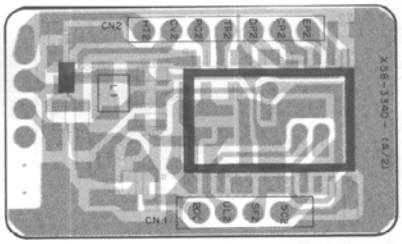

2SC3324

2SK508

DTC144EK
2SC2712
2SC2714

M54959FP

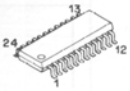

▼144 MHz VCO UNIT B (X58-3340-00)
[Component side view]

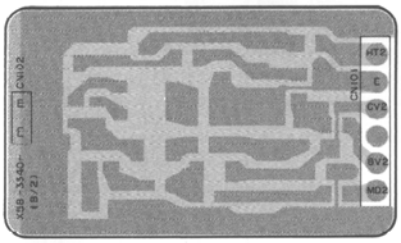

▼144 MHz VCO UNIT B (X58-3340-00)
[Foil side view]

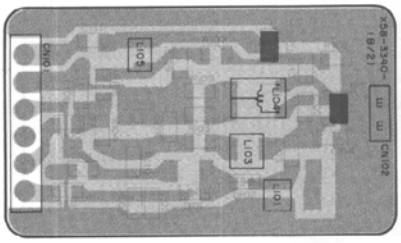

IC1 : M54959EP Q1 : DTC144EK Q2 : 2SC2712(Y) Q3,4 : 2SC3324(B) Q5,102 : 2SC2714(Y) Q101 : 2SK508(K52)
D101,102 : 1SV166

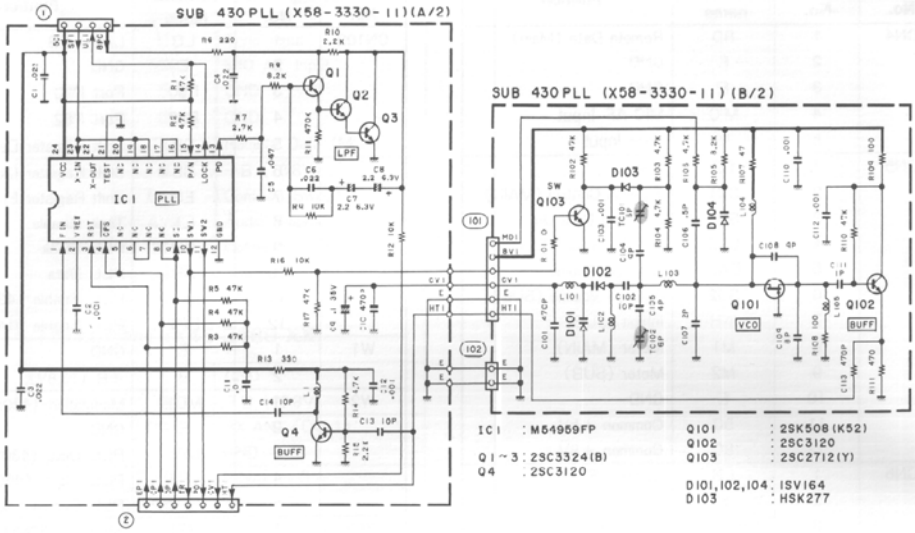

▼430 MHz VCO UNIT A (X58-3330-00)
[Component side view]

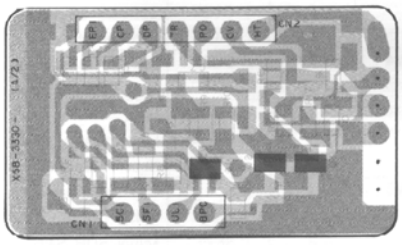

▼430 MHz VCO UNIT A (X58-3330-00)
[Foil side view]

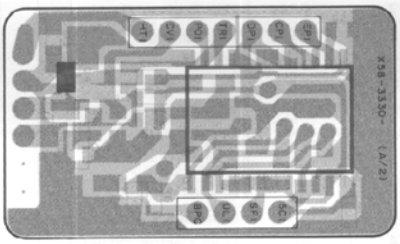

2SC3324

2SK508

2SC2712
2SC3120

M54959FP

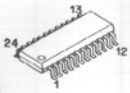

▼430 MHz VCO UNIT B (X58-3330-00)
[Component side view]

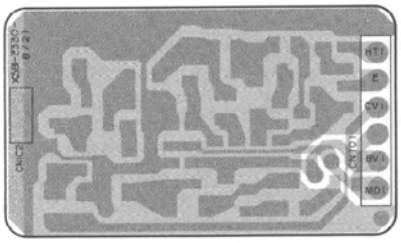

▼430 MHz VCO UNIT B (X58-3330-00)
[Foil side view]

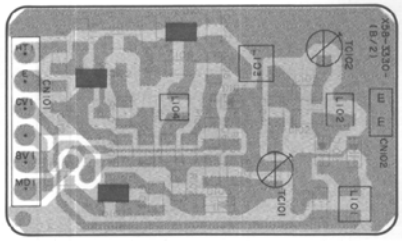

IC1 : M54959EP Q1 ~ 3 : 2SC3324(B) Q4,102 : 2SC3120 Q101 : 2SK508(K52) Q103 : 2SC2712(Y)
D101,102,104 : 1SV164 D103 : HSK277

▼CONTROL UNIT (X53-3130-XX) -11:K, -21:M, -51:T, -61:W

[Component side view]

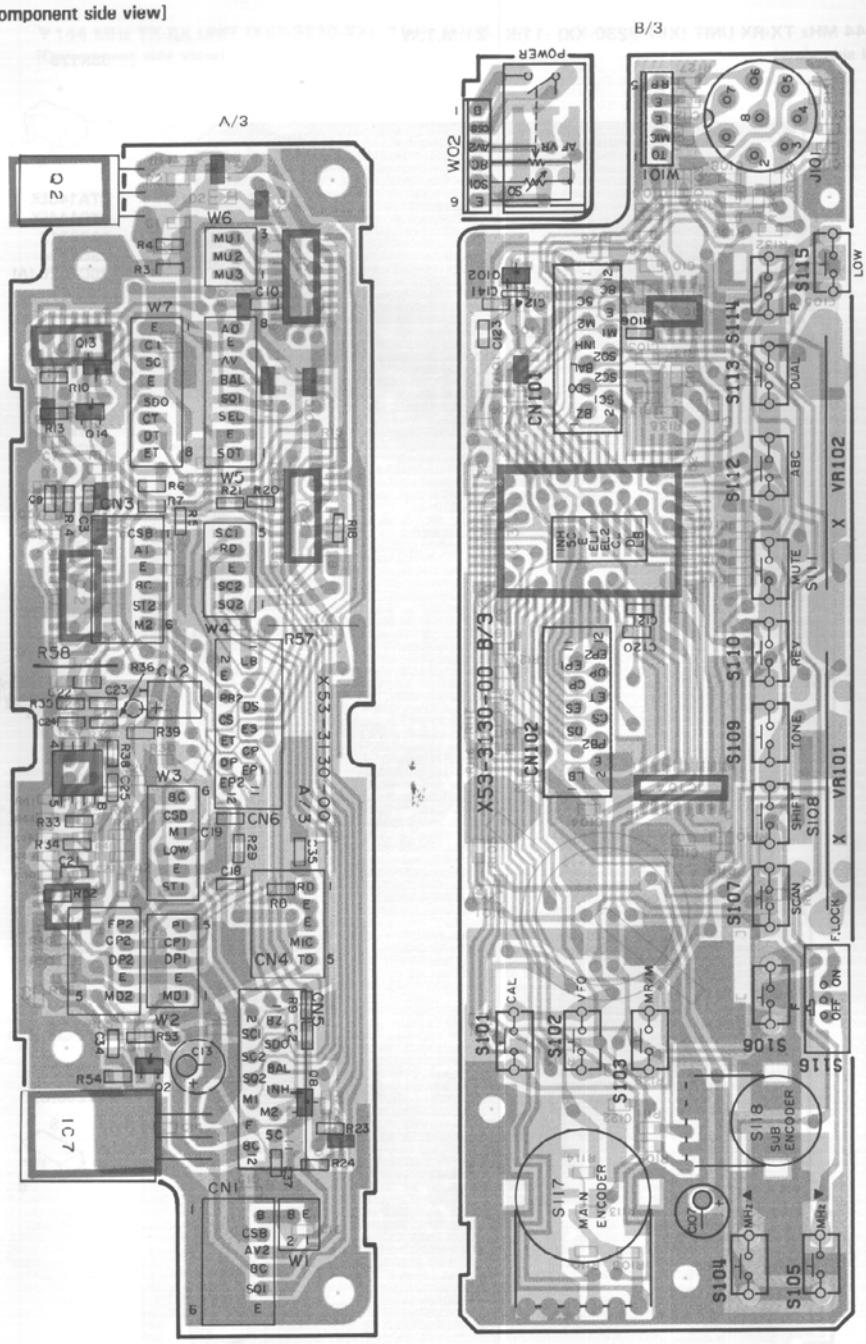

IC1 : MN4066BS IC2 : LC7532M IC3,4 : MN4094BS IC5,6 : NJM4558M IC7 : μPC78M08H IC102 : LA5006M
IC103 : 75108G-620-1B(TM-721A), 75108G-621-1B(TM-721E) IC104 : KRR-C001 Q1, 101, 102, 12(TM-721A) : 2SC2712(Y)
Q2 : 2SC3419(Y) Q3, 4, 7, 9, 10, 13, 14 : DTC114EK Q5, 6 : DTA114EK Q8 : DTC114TK D1 : 02CZ11Y D2 : 02CZ8.2Y
D3 : 1SS226 D101, 102, 104 : 1SS184 D103 : RLS73

PC BOARD VIEW

TM-721A/E

▼CONTROL UNIT (X53-3130-XX) -11:K, -21:M, -51:T, -61:W

[Foil side view]

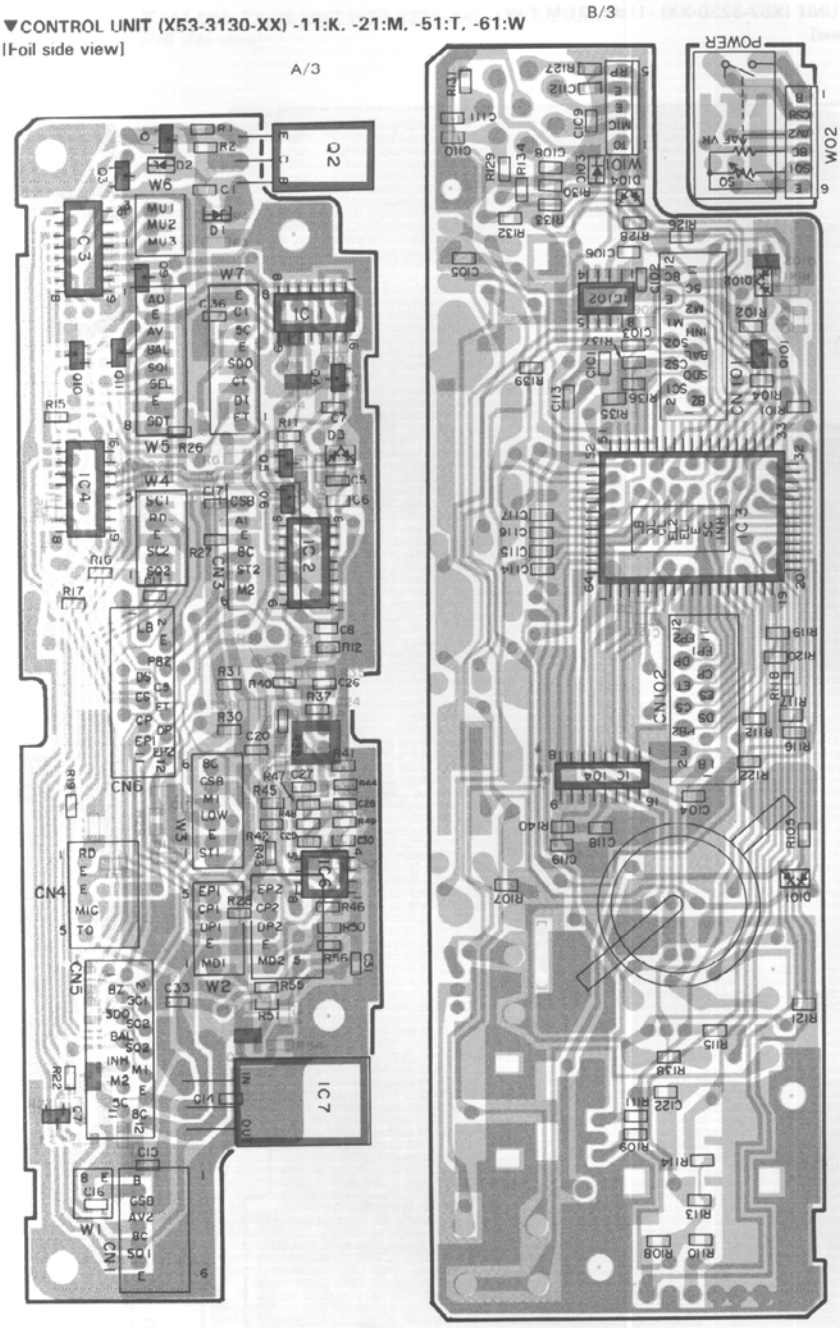

KRR-C001

MN4094BS

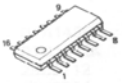

DTA114EK
DTC114EK
DTC114TK
2SC2712

2SC3419

LA5006M
NJM4558M

μPC78M08H

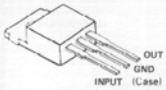

LC7532M

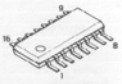

MN4066BS

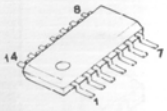

75108G-620-1B

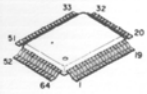

TM-721A/E PC BOARD VIEW

▼144 MHz TX-RX UNIT (X57-3230-XX) -11:K, -21:M,T,W
[Component side view]

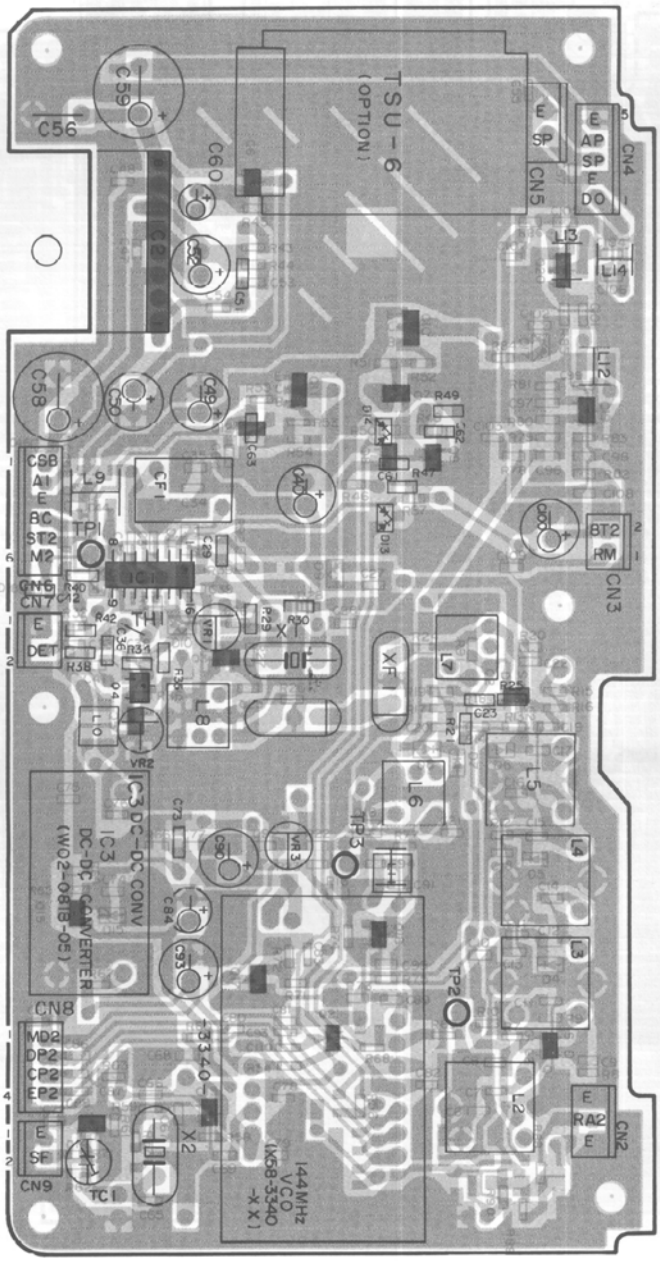

IC1 : MC3361D IC2 : HB3713 IC3 : W02-0818-05 Q1 : 3SK184(S) Q2 : 3SK179(L) Q3,13,14,18,19 : 2SC2714(Y)
Q4,5,7~9,15 : 2SC2712(Y) Q6,12 : DTC144EK Q10,11 : 2SB1119S Q17 : 2SC3326(A) Q20 : 2SC2954 Q21 : 2SK208(O)
D9,11~14 : 1SS184 D16 : 1SS268 D4~6,8 : 1SV164 D7 : 1SV166 D10 : HSM88AS D15 : 02CZ6.2(X,Y) D17 : 1SS181
D18 : 02CZ4.3(X,Y)

▼144 MHz TX-RX UNIT (X57-3230-XX) -11:K, -21:M,T,W
[Foil side view]

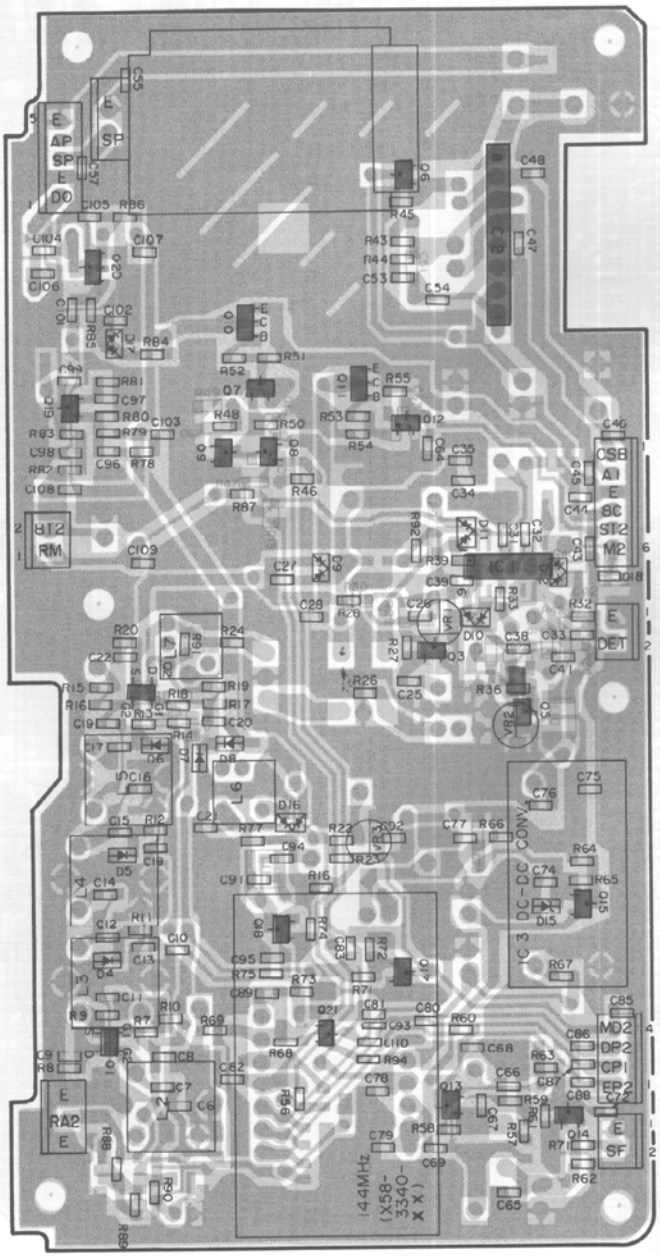

3SK179

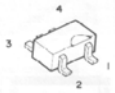

DTA143EK
DTC144EK
2SC2712
2SC2714
2SC3326 (A)

2SB1119S
2SC2954

MC3361D

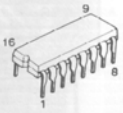

MB3713

3SK184

2SK208(O)

▼430 MHz TX-RX UNIT (X57-3210-XX) -11:K, -01:M,T,W
[Component side view]

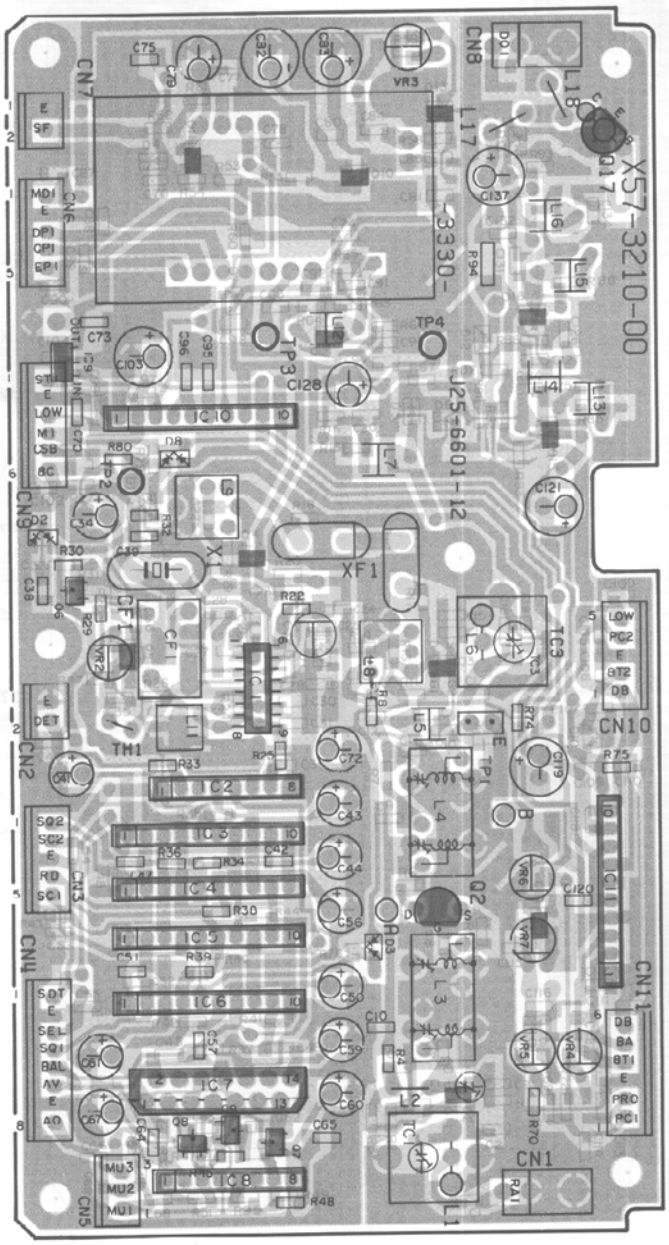

IC1 : MC3361D IC2 : KCS02 IC3,5 : KCA01 IC4,6 : KCA02 IC7 : M51523AL IC8 : KCE01 IC9 : NJM78L08UA
IC10 : KCS01 IC11 : KCC01

Q1,3 : 3SK184(S) Q2 : 2SK125 Q4 : 2SC2714(Y) Q5,6,10,11 : 2SC2712(Y) Q7,8,13 : 2SC3326(A)
Q9,14 : DTC124EK Q12,15 : 2SC2759(U23) Q16 : 2SC3357 Q17 : 2SC3369

D1,3,7,8,10,11 : 1SS184 D2 : HSM88AS D4 : 02CZ6.2(X,Y) D5,6 : 1SV128 D9,12,13 : 1SS181 D14 : 02Z4.3(X,Y)

PC BOARD VIEW

▼430 MHz TX-RX UNIT (X57 3210-XX) -11:K, -01:M.T.W
[Foil side view]

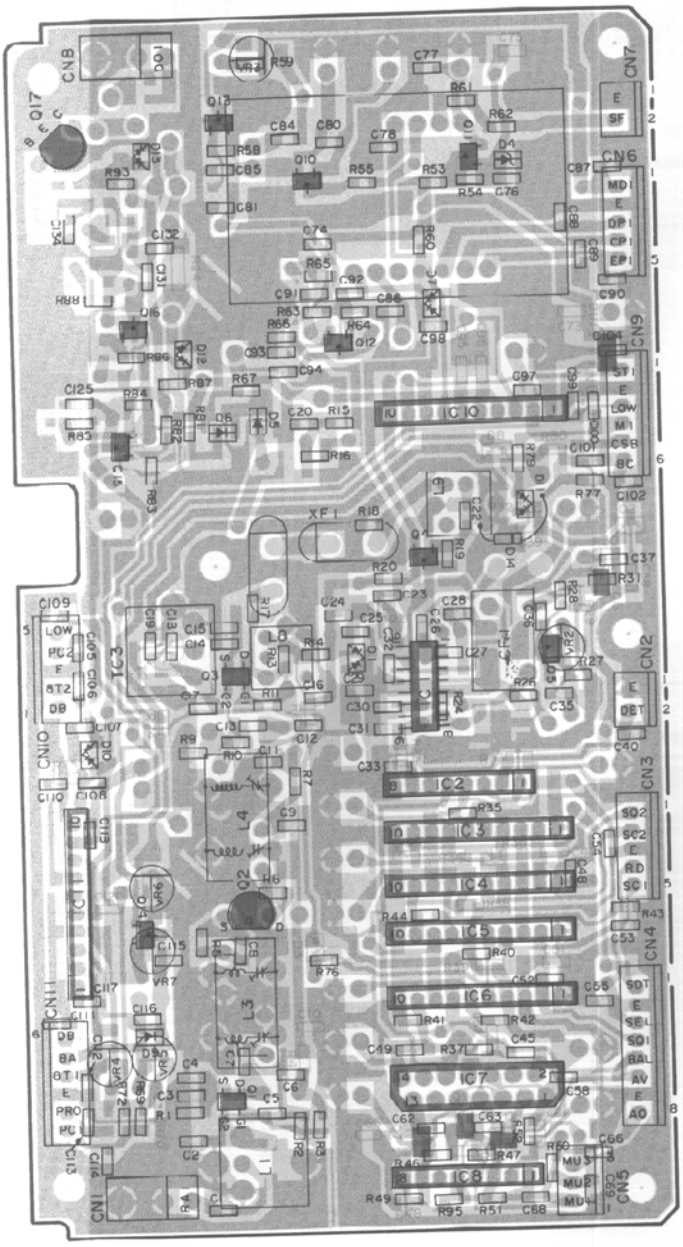

2SC3357

KCA01
KCA02
KCC01
KCS01

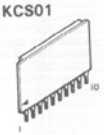

DTC124EK
2SC2712
2SC2714
2SC2759
2SC3326 (A)

2SC3369

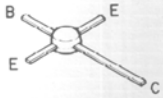

MC3361D

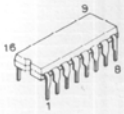

NJM78L08UA

2SK125

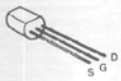

3SK184

M51523AL

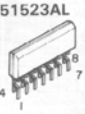

KCE01
KCS02

TM-721A/E PC BOARD VIEW

▼FINAL UNIT (X45-3180 XX)
[Component side view]

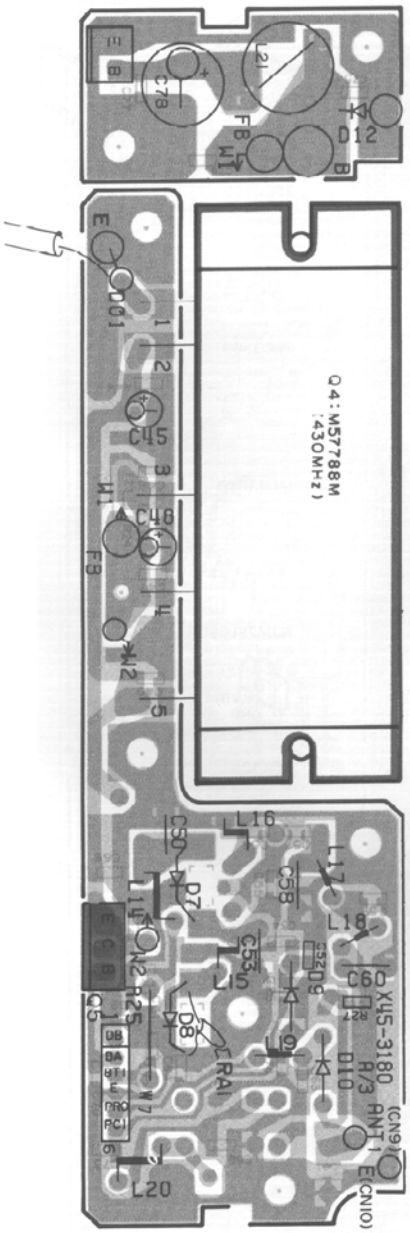

▼FINAL UNIT (X45-3180-XX) -11:K, -21:M, -51:T,W
[Foil side view]

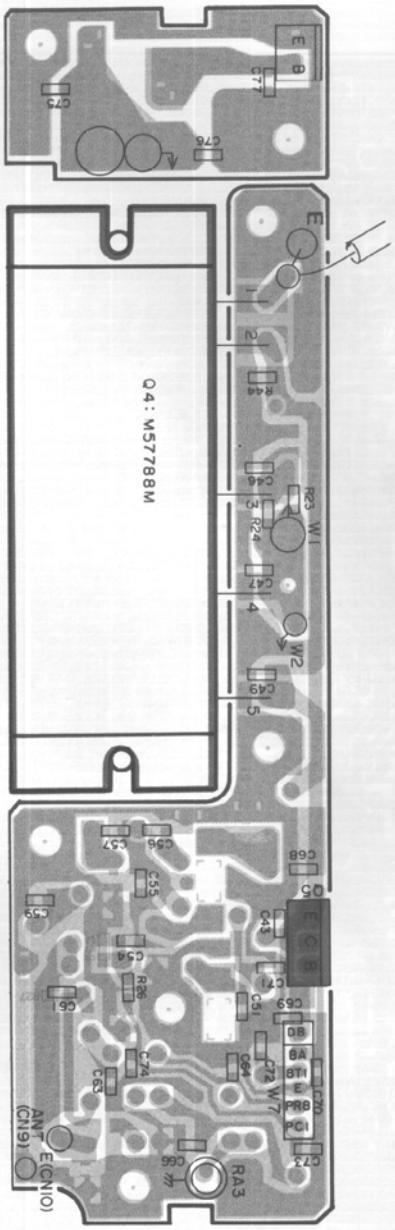

Q1 : M57726 Q2 : 2SC2538-22-A Q3 : FMW1 Q4 : M57788M Q5 : 2SD1406(Y) Q6 : DTC114EK D1,5 : 1SS184
D2,7 : UM9401 D3, 8 : MI308 D4, 9, 10 : 1SS101 D12 : DSA3A1

▼FINAL UNIT (X45-3180-XX)
[Component side view]

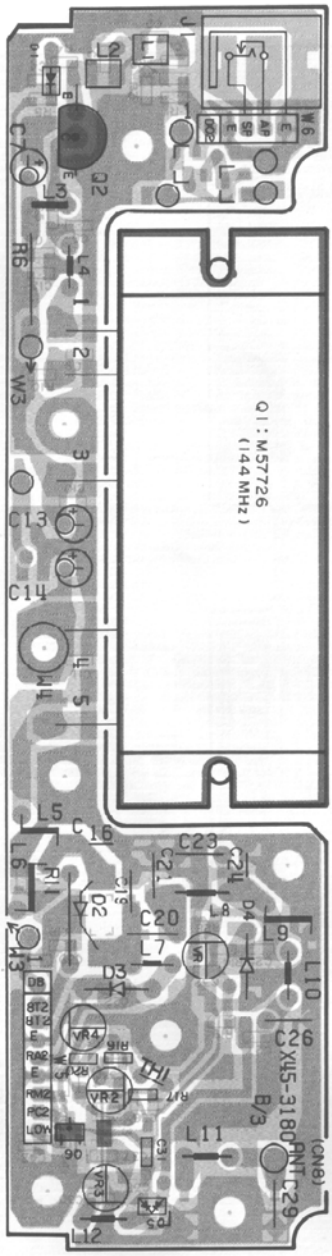

▼FINAL UNIT (X45-3180-XX) -11:K, -21:M, -51:T, W
[Foil side view]

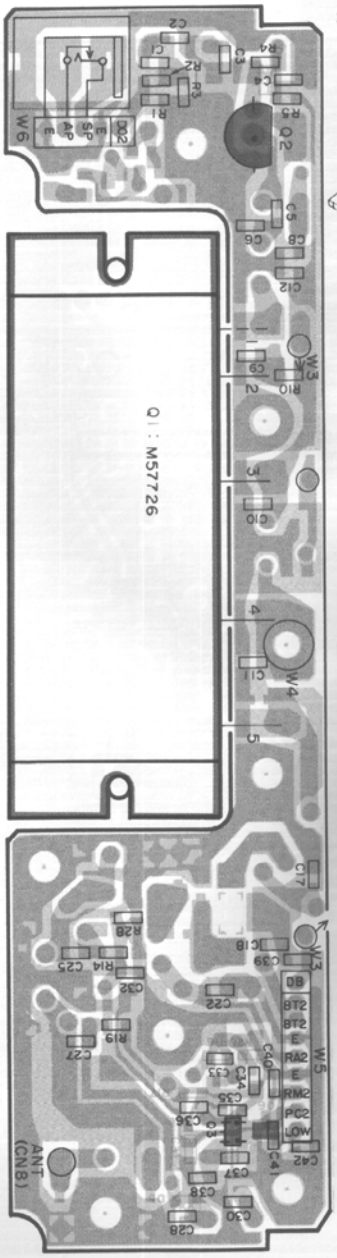

2SC2538-22-A

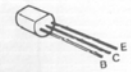

2SD1406

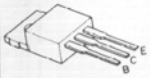

DTC114EK

FMW1

M57726

M57752

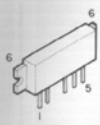

A B C D E

Signal line — — — Control line ——— Common DC line

Voltage measurement conditions f = 435.06 MHz, RX no signal, ( ):TX.

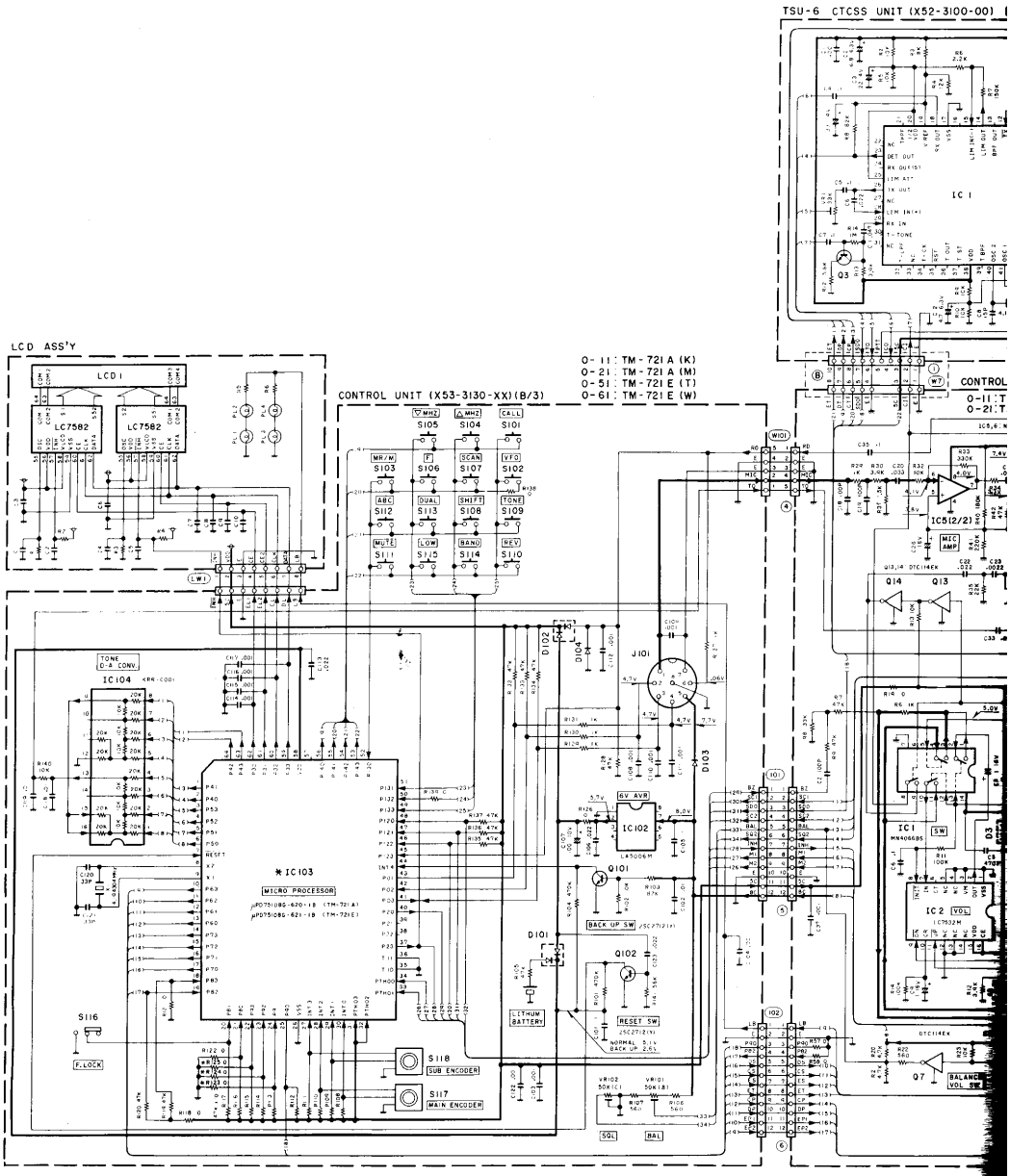

IC102	: LA5006M	D101, 102, 104 : 1SS184
★ IC103	: μPD75108G-XXX-1B	D103 : RLS-73
IC104	: KRR-C001	

Q101, 102 : 2SC2712(Y)

		Ⓐ	Ⓑ	IC103	R15	R32	R56	R123	R124	R125
O-11	TM-721A (K)	YES	YES	-620-	YES	NO	120K	NO	YES	YES
O-21	TM-721A (M)	YES	YES	-620-	YES	NO	100K	NO	YES	NO
O-51	TM-721E (T)	NO	NO	-621-	NO	YES	NO	NO	NO	YES
O-61	TM-721E (W)	NO	NO	-621-	NO	YES	NO	YES	YES	YES

IC1	: MN4066BS
IC2	: LC7532M
IC3, 4	: MN4094BS
IC5, 6	: NJM4558M
IC7	: μPC78M08H

on DC line

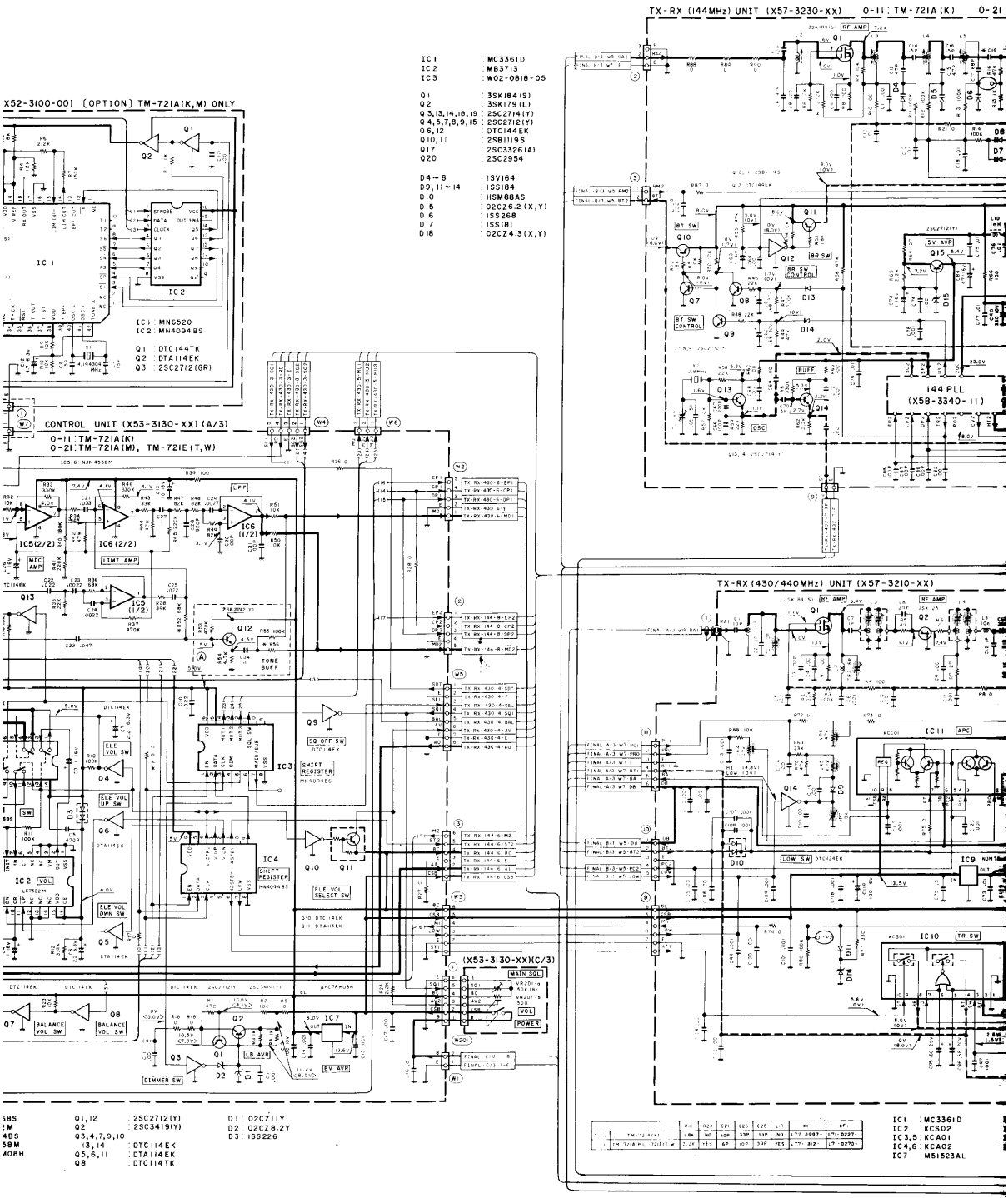
TX-RX (144MHz) UNIT (X57-3230-XX) 0-11 : TM-721A(K) 0-21
X52-3100-00) (OPTION) TM-721A(K,M) ONLY
IC1 : MN6520
IC2 : MN4094BS
Q1 : DTC144TK
Q2 : DTA114EK
Q3 : 2SC2712(GR)
CONTROL UNIT (X53-3130-XX) (A/3)
0-11 : TM-721A(K)
0-21 : TM-721A(M), TM-721E(T,W)
IC1 : MC3361D
IC2 : MB3713
IC3 : W02-0818-05
Q1 : 3SK184(S)
Q2 : 3SK179(L)
Q3,13,14,18,19 : 2SC2714(Y)
Q4,5,7,8,9,15 : 2SC2712(Y)
Q6,12 : DTC144EK
Q10,11 : 2SB1119S
Q17 : 2SC3326(A)
Q20 : 2SC2954
D4~8 : 1SV164
D9,11~14 : 1SS184
D10 : HSM88AS
D15 : 02CZ6.2(X,Y)
D16 : 1SS268
D17 : 1SS181
D18 : 02CZ4.3(X,Y)
144 PLL (X58-3340-11)
TX-RX (430/440MHz) UNIT (X57-3210-XX)
(X53-3130-XX)(C/3)
IC1 : MC3361D
IC2 : KCS02
IC3,5 : KCA01
IC4,6 : KCA02
IC7 : M51523AL

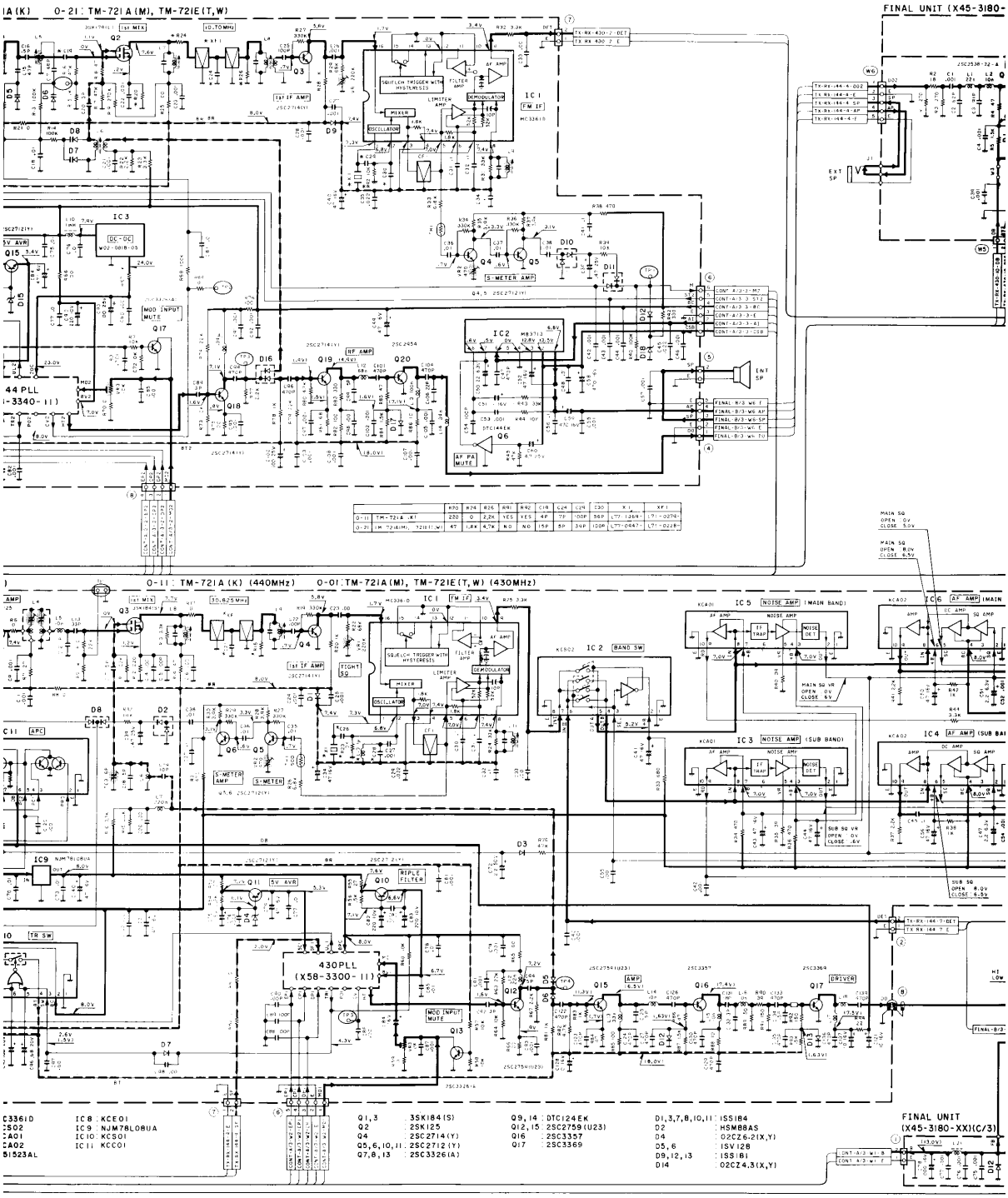
0-21 : TM-721A(M), TM-721E(T,W)
FINAL UNIT (X45-3180-
0-11 : TM-721A(K) (440MHz)
0-01 : TM-721A(M), TM-721E(T,W) (430MHz)
430PLL
(X58-3300-11)
FINAL UNIT
(X45-3180-XX)(C/3)
IC8 : KCE01
IC9 : NJM78L08UA
IC10 : KCS01
IC11 : KCC01
Q1,3 : 3SK184(S)
Q2 : 2SK125
Q4 : 2SC2714(Y)
Q5,6,10,11 : 2SC2712(Y)
Q7,8,13 : 2SC3326(A)
Q9,14 : DTC124EK
Q12,15 : 2SC2759(U23)
Q16 : 2SC3357
Q17 : 2SC3369
D1,3,7,8,10,11 : 1SS184
D2 : HSMB8AS
D4 : 02CZ6.2(X,Y)
D5,6 : 1SV128
D9,12,13 : 1SS181
D14 : 02CZ4.3(X,Y)

SCHEMATIC DIAGRAM TM-721A/E

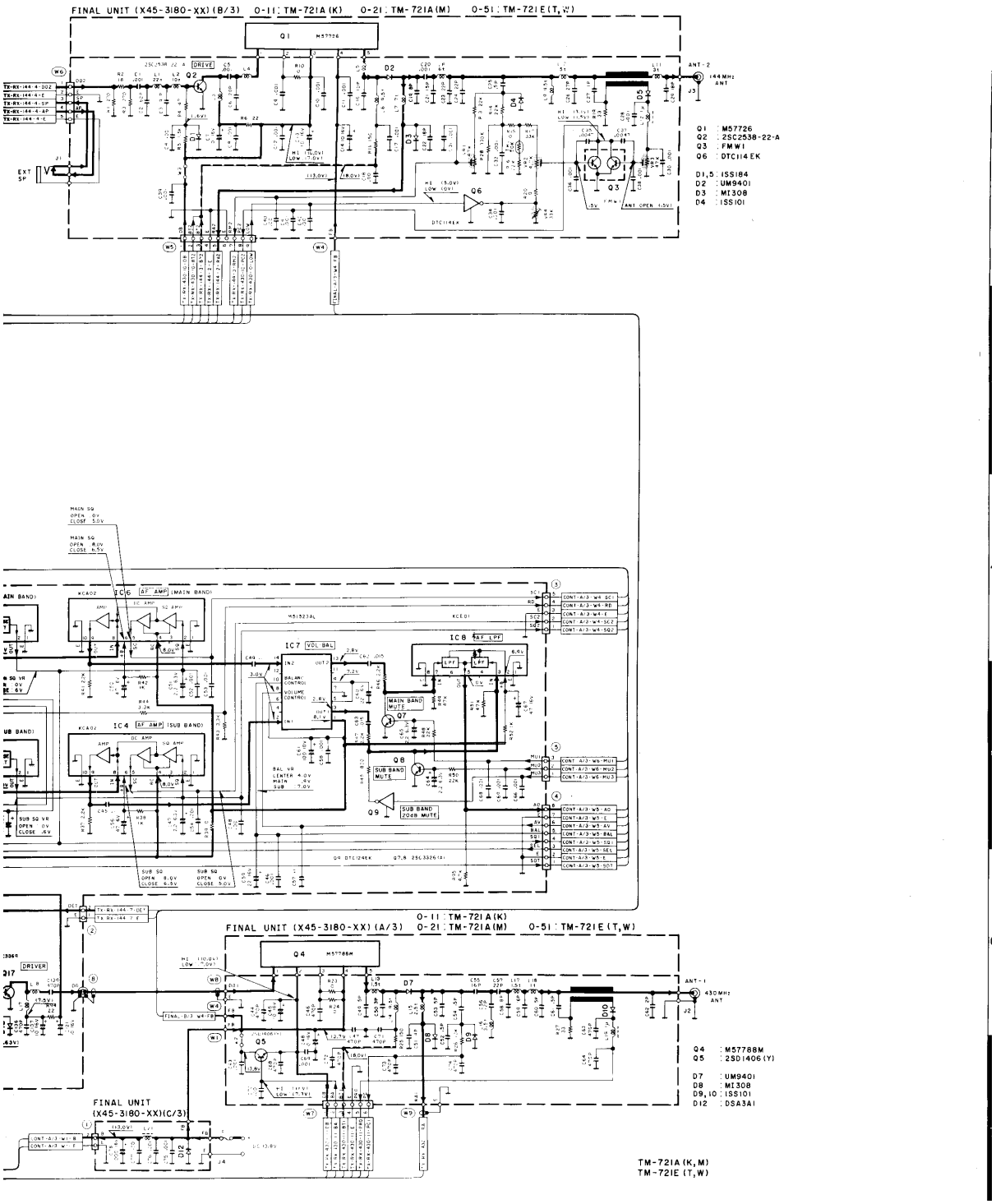

LEVEL DIAGRAM

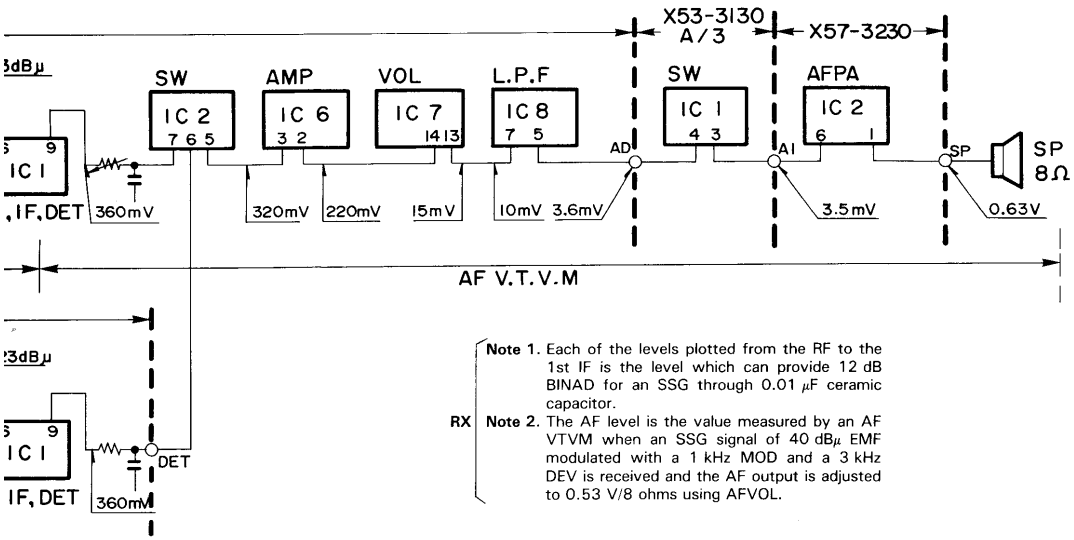

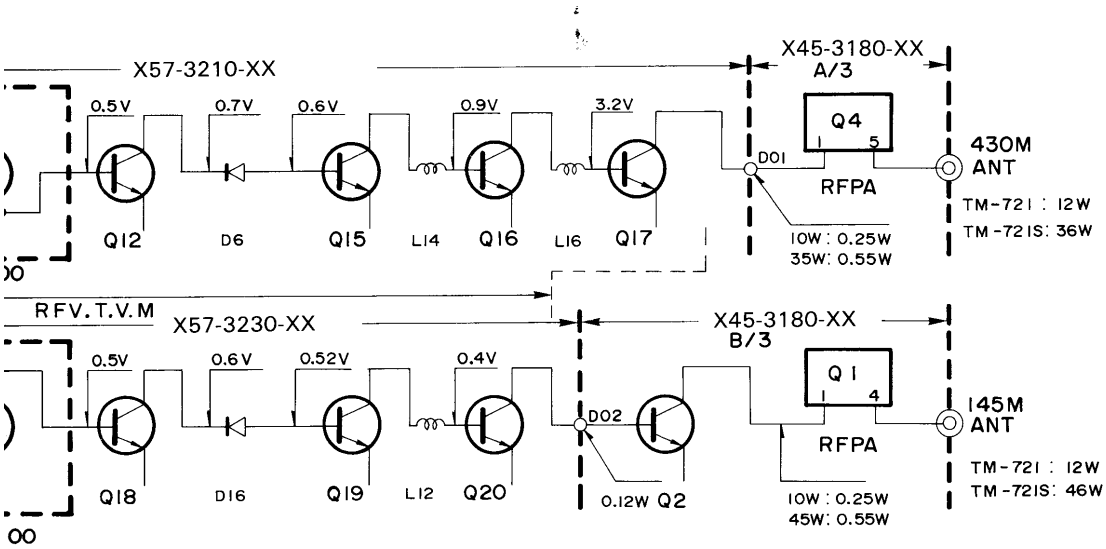

LEVEL DIA

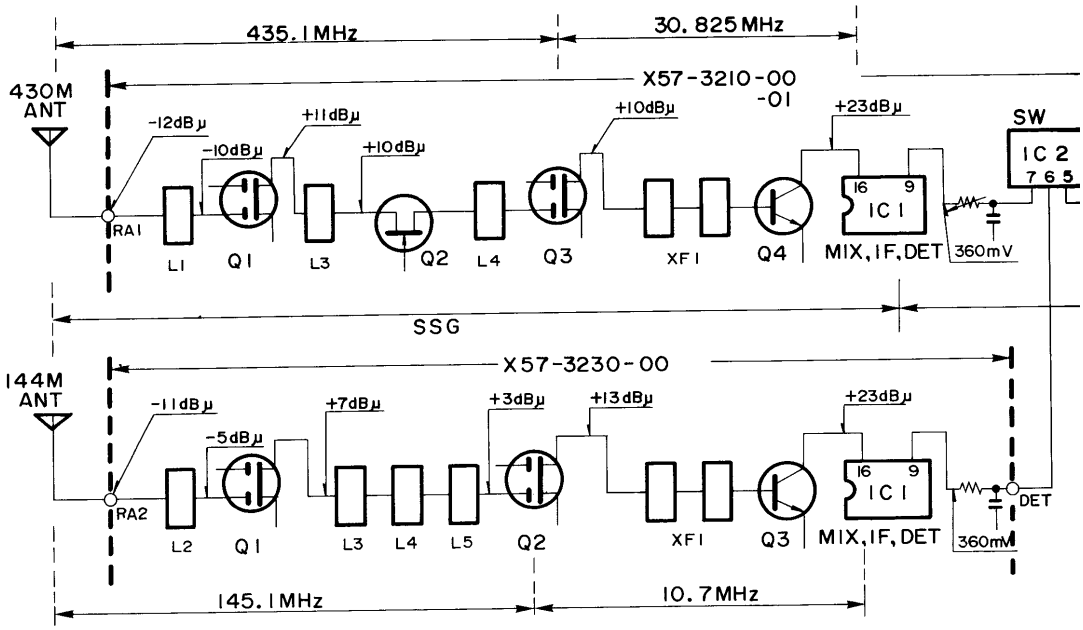

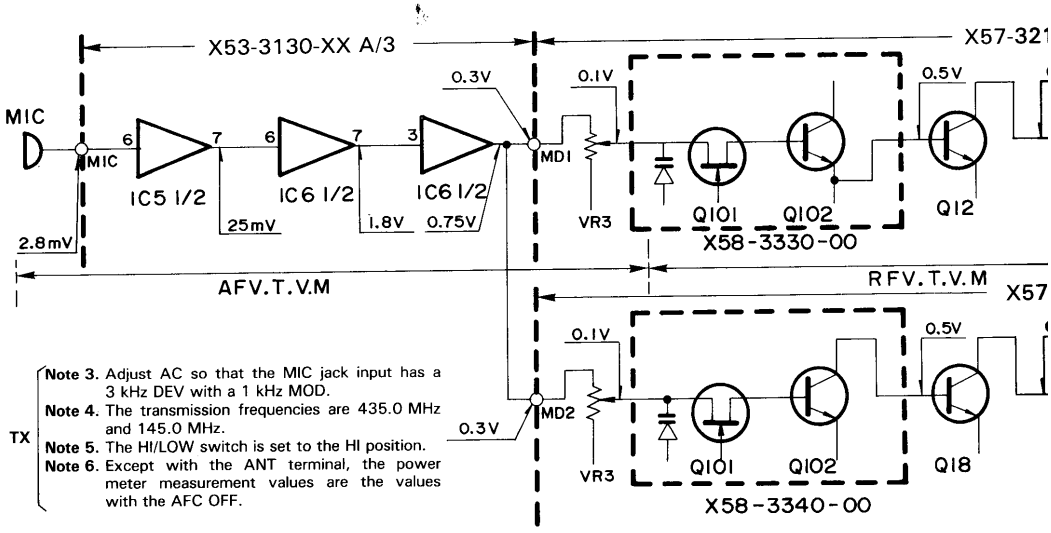

TX

Note 3. Adjust AC so that the MIC jack input has a 3 kHz DEV with a 1 kHz MOD.
Note 4. The transmission frequencies are 435.0 MHz and 145.0 MHz.
Note 5. The HI/LOW switch is set to the HI position.
Note 6. Except with the ANT terminal, the power meter measurement values are the values with the AFC OFF.

BLOCK DIAGRAM

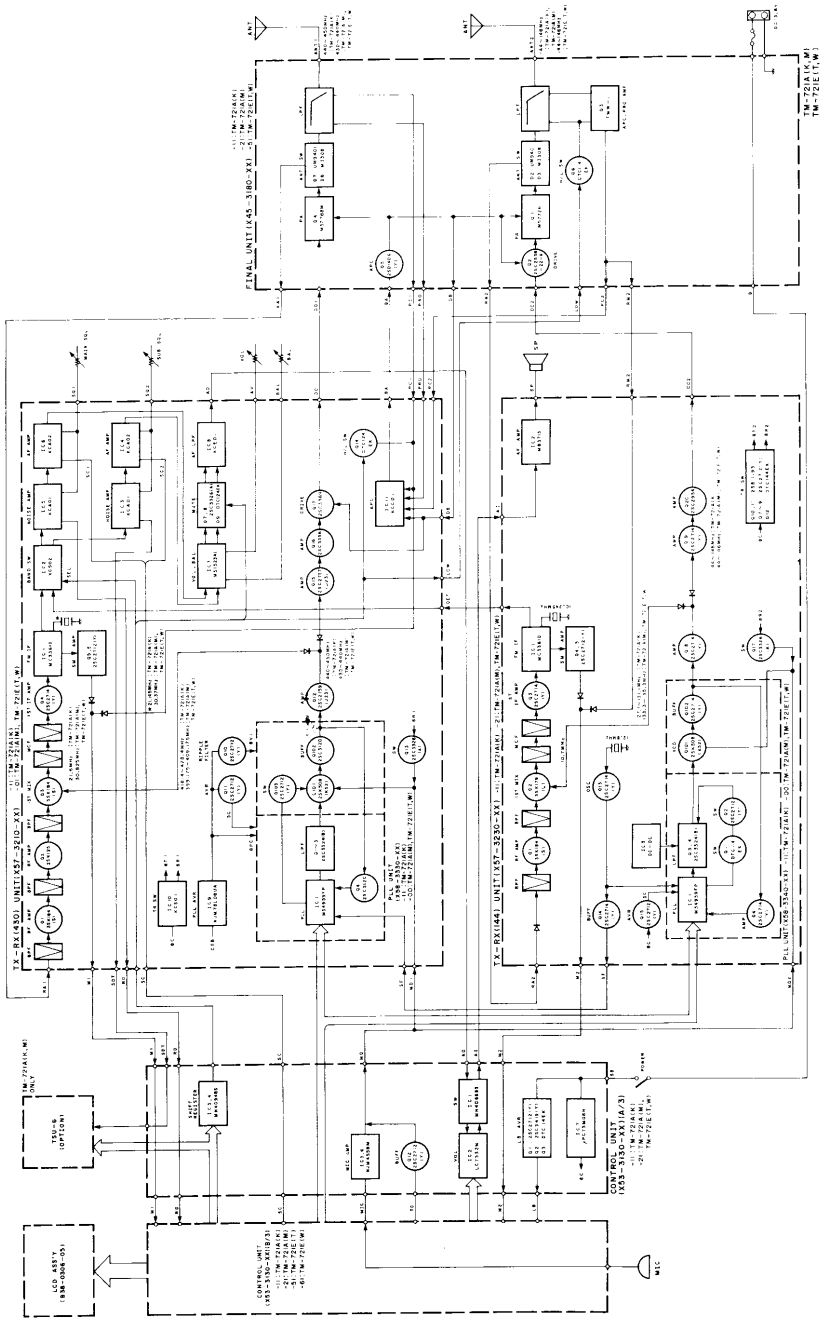

TSU-6 (CTCSS)

TSU-6 EXTERNAL VIEW

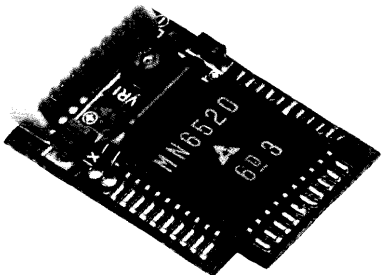

TSU-6 PARTS LIST

* New parts

Ref. No.	New Parts	Parts No.	Description		
CTCSS UNIT (X53-3100-00)					
C1		CK73FB1H102K	Chip C	1000pF	K
C2		C92-0010-05	Tan. C	6.8μF	6.3WV
C3	*	C92-0006-05	Tan.C	3.3μF	4.0WV
C4,5		CK73EB1E104K	Chip C	0.1μF	K
C6		CK73EB1H223K	Chip C	0.022μF	K
C7		CK73EB1E104K	Chip C	0.1μF	K
C8,9		CC73FCH1H150J	Chip C	15pF	J
C10		CK73FB1H102K	Chip C	1000pF	K
C11		CK73EB1E104K	Chip C	0.1μF	K
C12		C92-0507-05	Chip tan. C	4.7μF	6.3WV
C13	*	C92-0510-05	Chip tan. C	3.3μF	4WV
	*	E40-5121-05	Pin ass'y socket (10P)		
X1		L77-1313-05	X'tal 4.194304 MHz		
R1 ~ 10		RK73FB2A000J	Chip R		
R12 ~ 14		RK73FB2A000J	Chip R		
VR1	*	R12-3460-05	Semi-fixed R 33 kΩ		
Q1		DTC144TK	DIGITAL TR		
Q2		DTA114EK	DIGITAL TR		
Q3		2SC2712(GR)	Chip TR		
IC1		MN6520	IC		
IC2		MN4094BS	IC		

TSU-6 Frequency Fine-Adjustment

The tone frequency can be fine-adjusted in 0.5% steps, in the range from 0 to +1.5%. For the fine-adjustment, connect T1 (pin 10) and T2 (pin 9) of 101 as indicated in Table 3.

	T1	T2
0%	X	X
+0.5%	O	X
+1.0%	X	O
+1.5%	O	O

O : GND, X : OPEN

Table 3

TSU-6 Reference Information

Relationship Between the Main Unit Mode and the MN4094BS (IC2)

CTCSS Switch	TONE Switch	TX/RX	MN4094BS Terminals		
			Q5	Q6	Q1 ~ 4, 7, 8
OFF	OFF	TX	L	H	L
		RX	L	H	L
	ON	TX	L	L	See Table 2.
		RX	L	H	L
ON	OFF	TX	L	L	See Table 2.
		RX	H	L	
	ON	TX	L	L	
		RX	H	L	

Q1 ~ 4, 7, 8: Tone frequency setting

Q5: MN6520 (IC1) TX/RX switching. "H": RX, "L": TX.

Q6: MN6520 (IC1) power switching. "H": OFF, "L": ON.

Table 1

Relationship Between Tone Frequency and the MN6520 (IC1)

Tone Frequency (Hz)	MN6520 Terminals					
	$\overline{S6}$	$\overline{S5}$	$\overline{S4}$	$\overline{S3}$	$\overline{S2}$	$\overline{S1}$
	MN4094 Terminals					
	Q1	Q2	Q3	Q4	Q7	Q8
67.0	L	H	H	H	L	H
71.9	L	H	H	H	L	L
74.4	L	H	H	L	H	H
77.0	L	H	H	L	H	L
79.7	L	H	H	L	L	H
82.5	L	H	H	L	L	L
85.4	L	H	L	H	H	H
88.5	L	H	L	H	H	L
91.5	L	H	L	H	L	H
94.8	H	H	H	L	L	H
100.0	H	H	H	L	L	L
103.5	H	H	L	H	H	H
107.2	H	H	L	H	H	L
110.9	H	H	L	H	L	H
114.8	H	H	L	H	L	L
118.8	H	H	L	L	H	H
123.0	H	H	L	L	H	L
127.3	H	H	L	L	L	H
131.8	H	H	L	L	L	L
136.5	H	L	H	H	H	H
141.3	H	L	H	H	H	L
146.2	H	L	H	H	L	H
151.4	H	L	H	H	L	L
156.7	H	L	H	L	H	H
162.2	H	L	H	L	H	L
167.9	H	L	H	L	L	H
173.8	H	L	H	L	L	L
179.9	H	L	L	H	H	H
186.2	H	L	L	H	H	L
192.8	H	L	L	H	L	H
203.5	H	L	L	H	L	L
210.7	H	L	L	L	H	H
218.1	H	L	L	L	H	L
225.7	H	L	L	L	L	H
233.6	H	L	L	L	L	L
241.8	L	H	H	H	H	H
250.3	L	H	H	H	H	L

Table 2

TSU-6 (CTCSS UNIT)

TSU-6 PC BOARD VIEW

[Component side view]

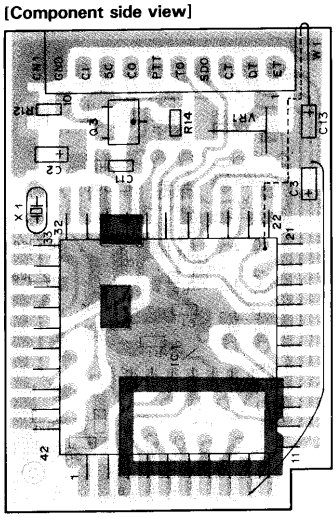

[Foil side view]

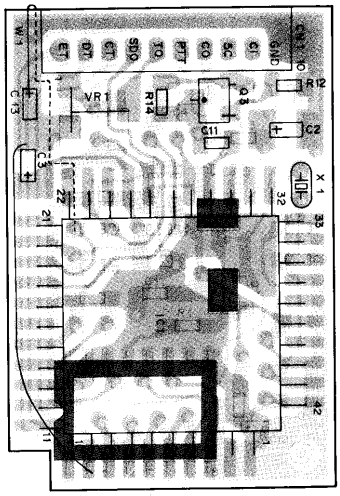

: Components side pattern
: Foil side pattern

TSU-6 SCHEMATIC DIAGRAM

CTCSS UNIT (X52-3100-00)

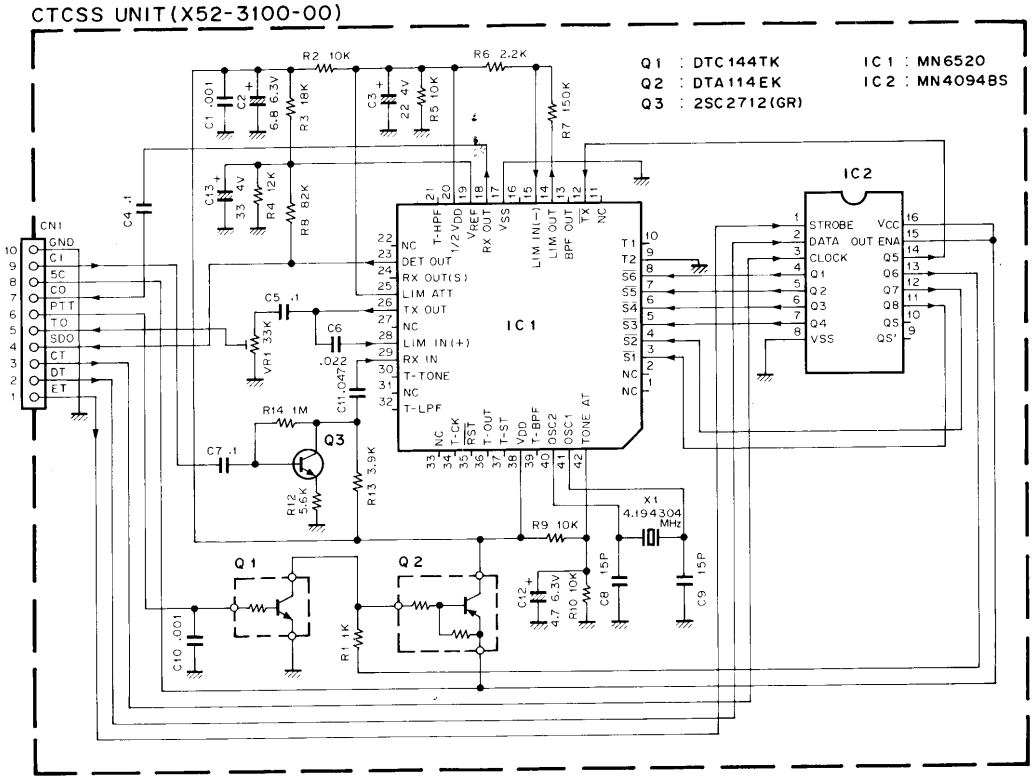

TM-721A/E

SPECIFICATIONS

Specifications \ Model			TM-721A U.S.A. version	TM-721A Other markets version	TM-721E
General	Frequency range		144 to 148 MHz 438 to 450 MHz	144 to 148 MHz 430 to 440 MHz	144 to 146 MHz 430 to 440 MHz
	Mode		F3E (FM)		
	Antenna impedance		50 ohms		
	Power requirements		13.8 VDC ±15%		
	Ground		Negative		
	Current drain	Transmit mode (Max.)	9.5 A		
		Receive mode with no signal	0.6 A		
	Operating temperature		−20°C to +60°C (−4°F to +140°F)		
	Dimensions (W×H×D) (Projections included)		150×50×219 mm (5.9"×2"×8.6")		
	Weight		1.8 kg (3.97 lbs)		
Transmitter	Output power*	HI	144 MHz: 45 W, 430/440 MHz: 35 W		
		LOW	5 W		
	Modulation		Reactance modulation		
	Spurious radiation		Less than −60 dB		
	Maximum frequency deviation		±5 kHz		
	Audio distortion (at 60% modulation)		Less than 3% (300 to 3000 Hz)		
	Microphone impedance		500 to 600 ohms		
Receiver	Circuitry		Double conversion superheterodyne		
	Intermediate frequency	U.S.A. version	144 MHz: 16.9 MHz/455 kHz, 440 MHz: 21.6 MHz/455 kHz		
		Other market	144 MHz: 10.7 MHz/455 kHz, 430 MHz: 30.825MHz/455 kHz		
	Sensitivity(12 dB SINAD)		Less than 0.16 μV		
	Selectivity		−6 dB: More than 12 kHz, −60 dB: Less than 24 kHz		
	Spurious response		Better than 60 dB		
	Squelch sensitivity		Less than 0.09 μV		
	Output		More than 2 W across 8 ohms load (5% distortion)		
	External speaker impedance		8 ohms		

Notes:

1. Circuit and ratings are subject to change without notice due to advancement in technology.
2. * : Recommended duty cycle:
   1 minute : Transmission
   3 minutes : Reception

KENWOOD CORPORATION
2-chome Shibuya, Shibuya-ku, Tokyo 150, Japan
ORATION
guez St., Long Beach, CA 90801-5745, U.S.A.
CS DEUTSCHLAND GMBH
nstamm, West Germany
CS BENELUX N.V.
aventem, Belgium
CE S.A.
ance
CS AUSTRALIA PTY. LTD.
(INCORPORATED IN N.S.W.)
4E. Woodcock Place, Lane Cove, N.S.W. 2066, Australia

ANTIQUES2
pagina 1

1988-2/1988-9 (T) 650