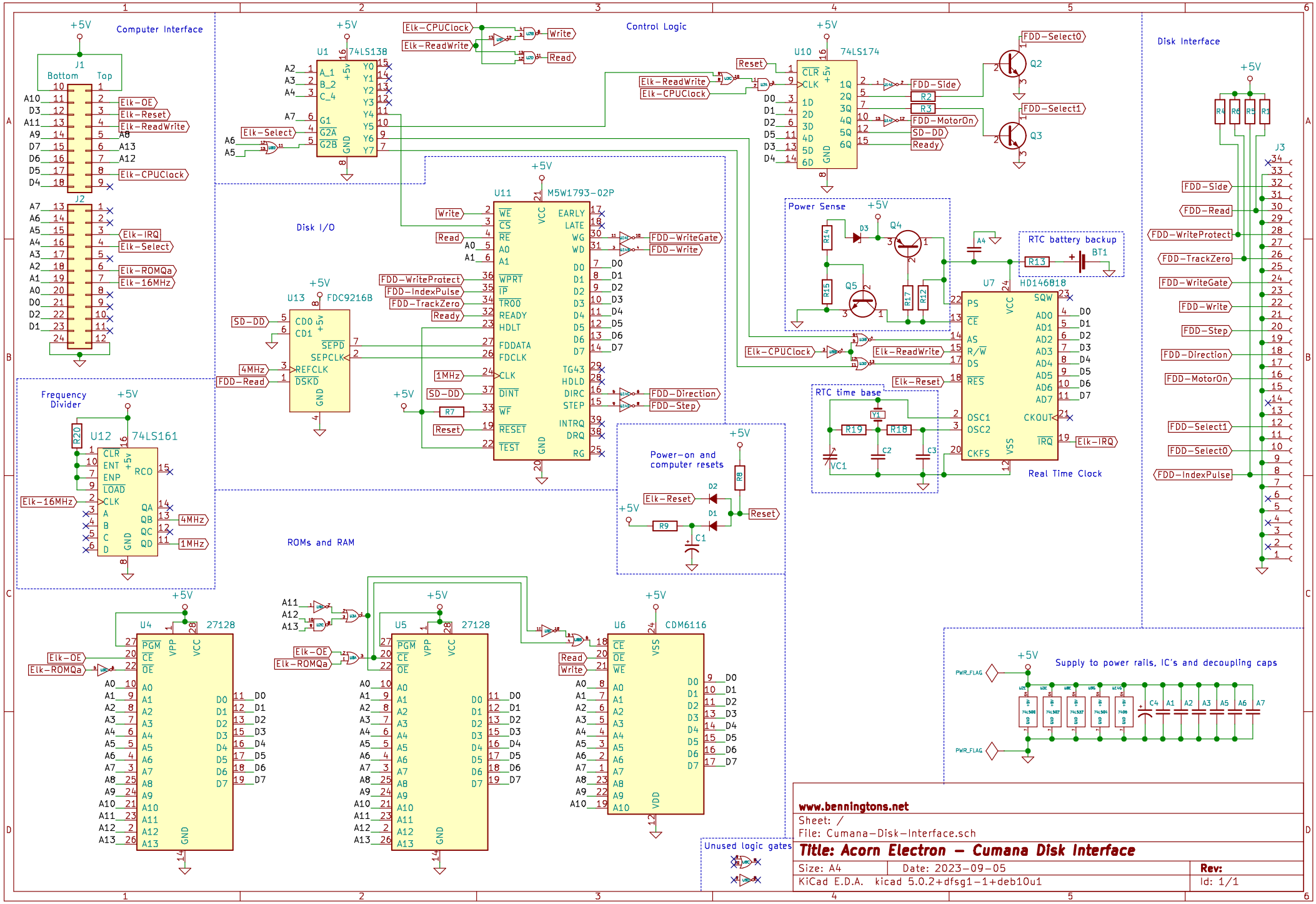
Computer Interface
Control Logic
Disk Interface
Disk I/O
Frequency Divider
Power Sense
RTC battery backup
RTC time base
Real Time Clock
Power-on and computer resets
ROMs and RAM
Supply to power rails, IC's and decoupling caps
Unused logic gates
U1 74LS138
U10 74LS174
U11 M5W1793-02P
U13 FDC9216B
U12 74LS161
U7 HD146818
U4 27128
U5 27128
U6 CDM6116
J1
J2
J3
BT1
Q2
Q3
Q4
Q5
Y1
VC1
+5V
Elk-CPUClock
Elk-ReadWrite
Elk-Select
Elk-OE
Elk-Reset
Elk-ROMQa
Elk-16MHz
Elk-IRQ
FDD-Side
FDD-Read
FDD-WriteProtect
FDD-TrackZero
FDD-WriteGate
FDD-Write
FDD-Step
FDD-Direction
FDD-MotorOn
FDD-Select1
FDD-Select0
FDD-IndexPulse
SD-DD
4MHz
1MHz
Write
Read
Reset
Ready
PWR_FLAG
www.benningtons.net
Sheet: /
File: Cumana-Disk-Interface.sch
Title: Acorn Electron - Cumana Disk Interface
Size: A4
Date: 2023-09-05
Rev:
KiCad E.D.A. kicad 5.0.2+dfsg1-1+deb10u1
Id: 1/1