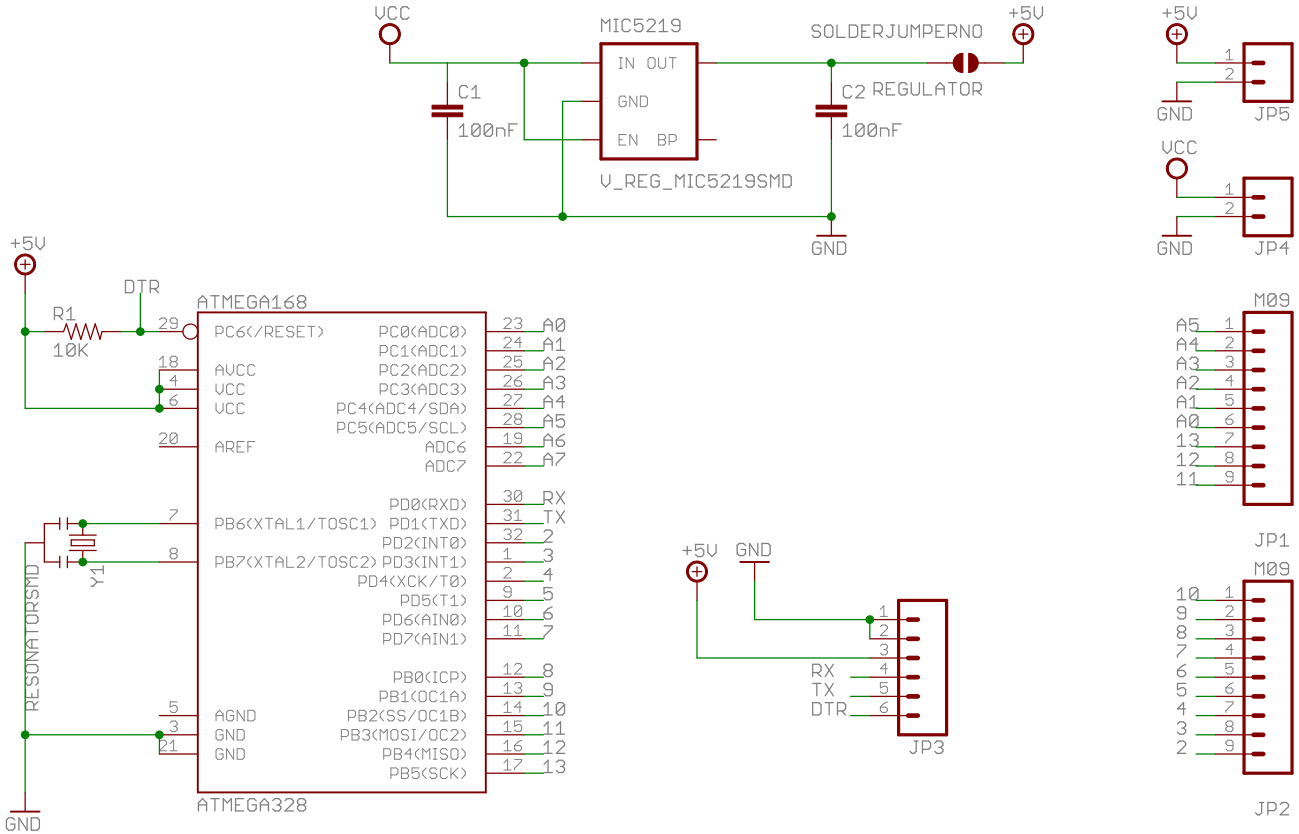

TITLE: Atmega328_SMD_mini_V003 (PRINT)	
Document Number:	REV:
Date: 10/19/2013 1:34:19 AM	Sheet: 1/1