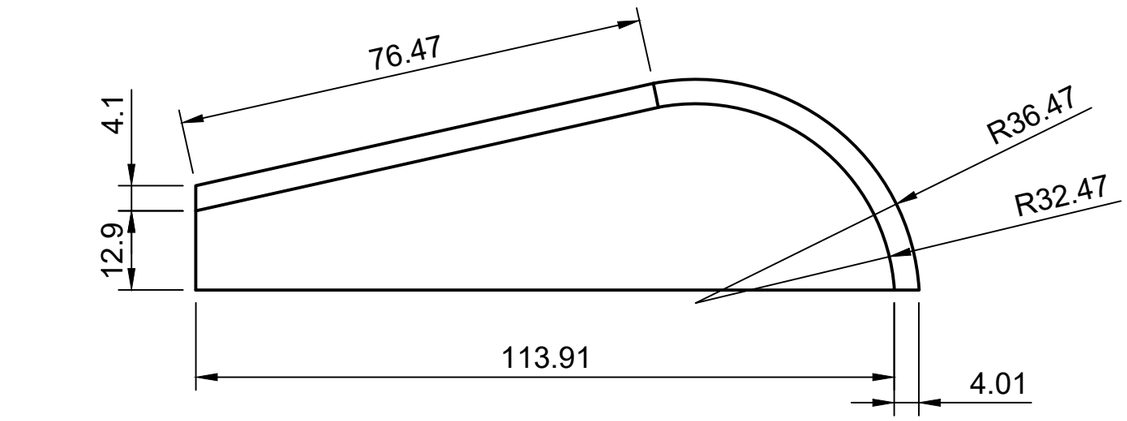

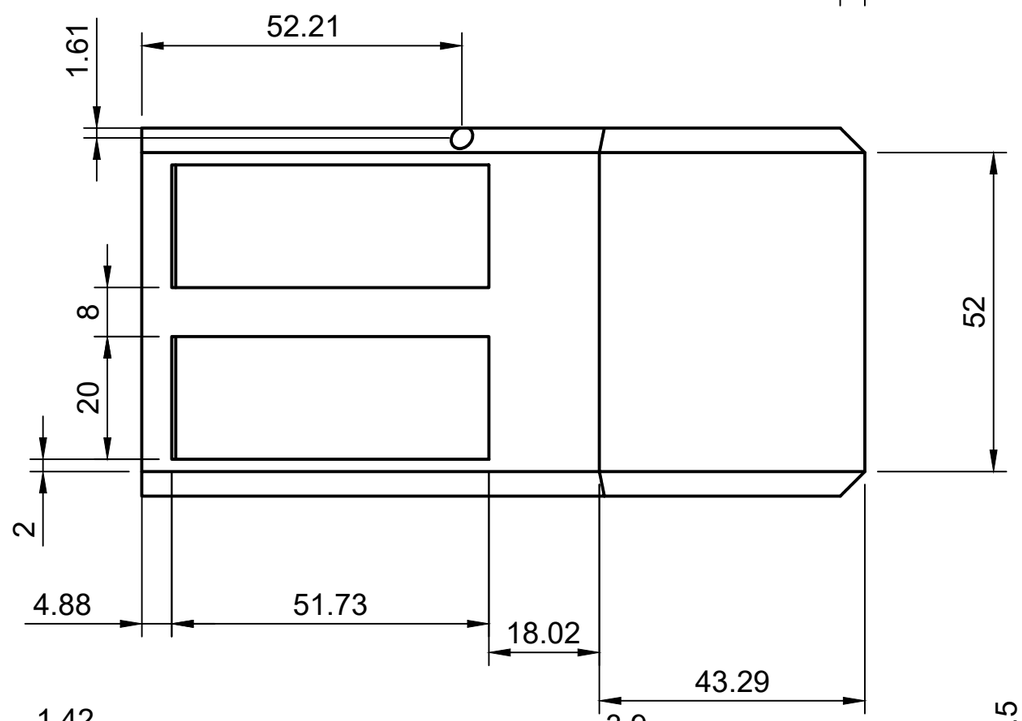

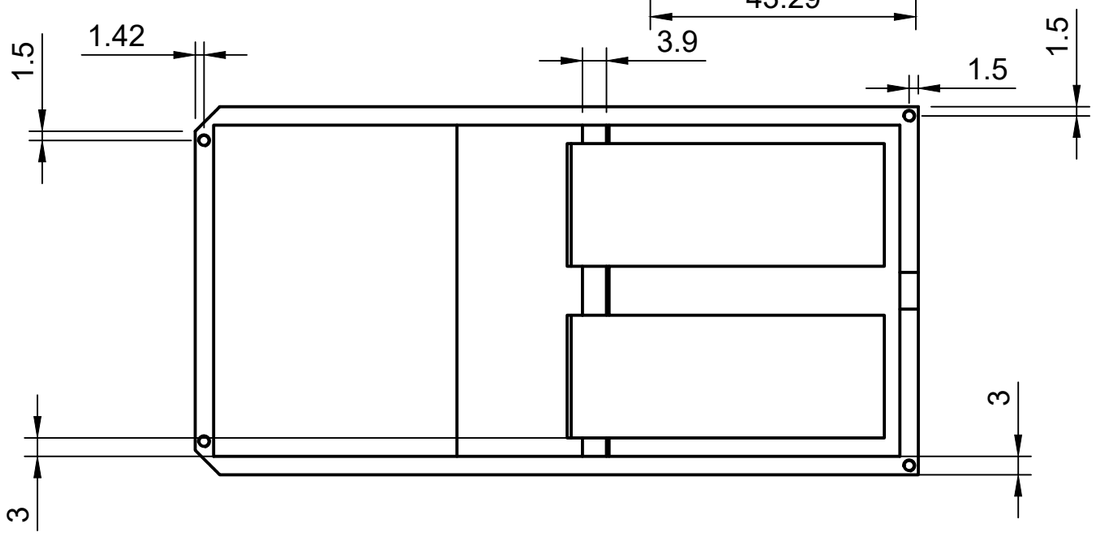

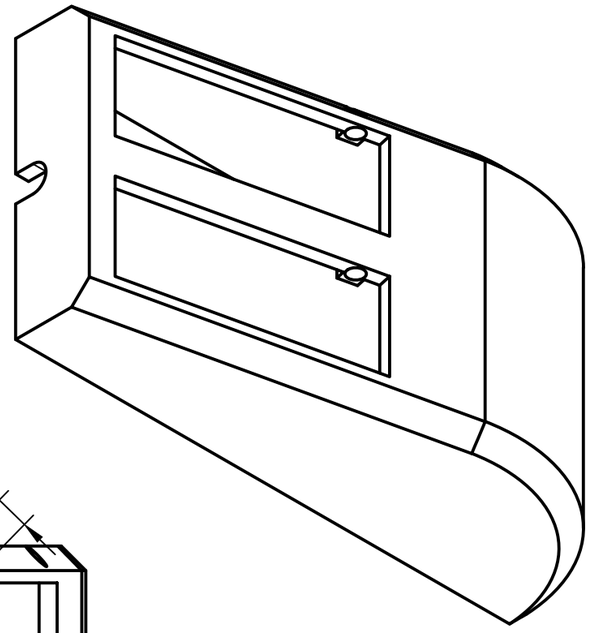

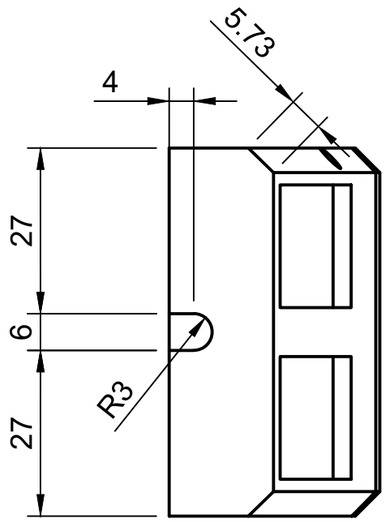

Dept.	Technical reference	Created by	Approved by
	2	Harrison Smith 2022-10-25	
		Document type	Document status
		Title Base Top	DWG No. 5
		Rev. 11	Date of issue 2022-10-25 / Sheet 1/1