SAO VOJA4 ADAPTER (with SPI!)

GPIO TO I2C CONVERTER

Voja4 set OUTx HIGH when not in use for tri-state mode. 1st NPN is ON. /OUT is LOW. 2nd NPN is OFF. I2C line is floating HIGH.

Voja4 set OUT0 LOW to assert I2C line low. 1st NPN is OFF. /OUT is HIGH. 2nd NPN is ON. I2C line is asserted LOW.

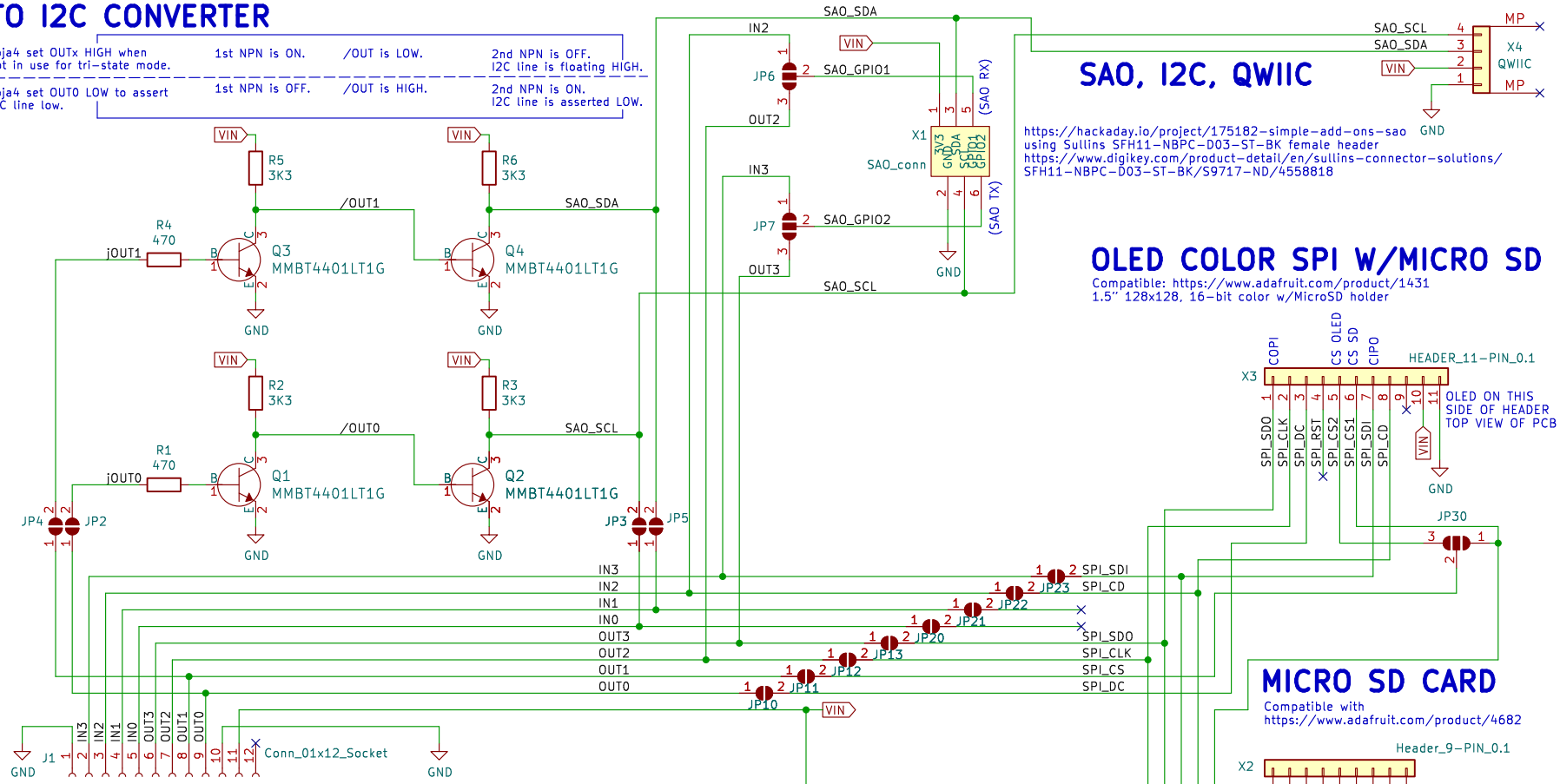

SAO, I2C, QWIIC

https://hackaday.io/project/175182-simple-add-ons-sao using Sullins SFH11-NBPC-D03-ST-BK female header
https://www.digikey.com/product-detail/en/sullins-connector-solutions/SFH11-NBPC-D03-ST-BK/S9717-ND/4558818

OLED COLOR SPI W/MICRO SD

Compatible: https://www.adafruit.com/product/1431
1.5" 128x128, 16-bit color w/MicroSD holder

MICRO SD CARD

Compatible with https://www.adafruit.com/product/4682

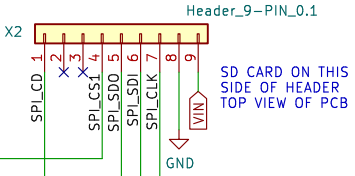

BADGE

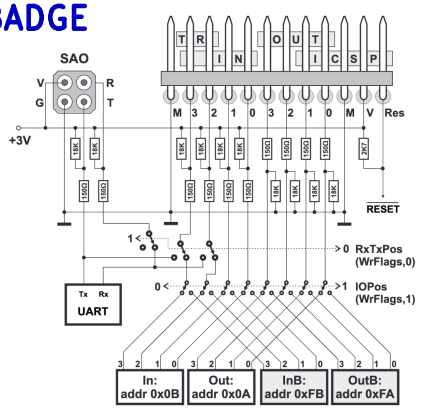

ALTERNATE BATTERY

LIMIT BATTERY 2.5 TO 5.5V

3V3 REGULATOR

SOT-23-5
.3V DROP @300mA
U1
SSP9193-33M5R

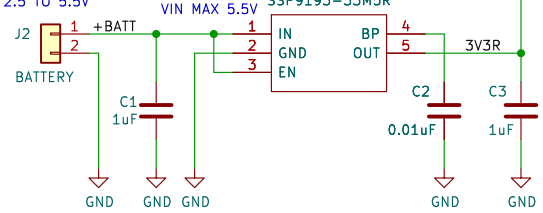

L1
Machine Ideas Logo

All non-polarized capacitors are X7R or X5R ceramic unless otherwise noted.
Designed by: Andy G., Koppany H.

Draft 10/21/2024 2200 CDT

Sheet: /
File: SAO Voja4 Adapter.kicad_sch

Title: SAO Voja4 Adapter

Size: A	Date: 2024-10-22	Rev: 1.0
KiCad E.D.A. 8.0.4		Id: 1/1