1. Overview of Final Design

The final design of the project is a passive exoskeleton knee joint module consisting of a mechanical hinge system that allows controlled flexion and extension of the knee. The system is designed as a single-degree-of-freedom mechanism, enabling motion only in bending and straightening.

The assembly includes:

- Upper leg plate

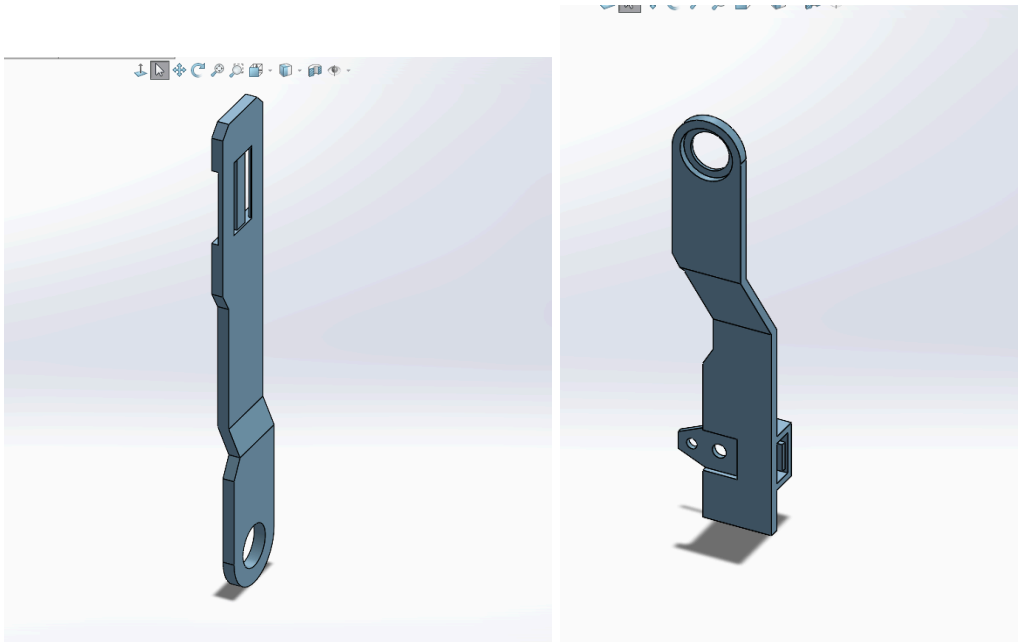

- Lower leg plate

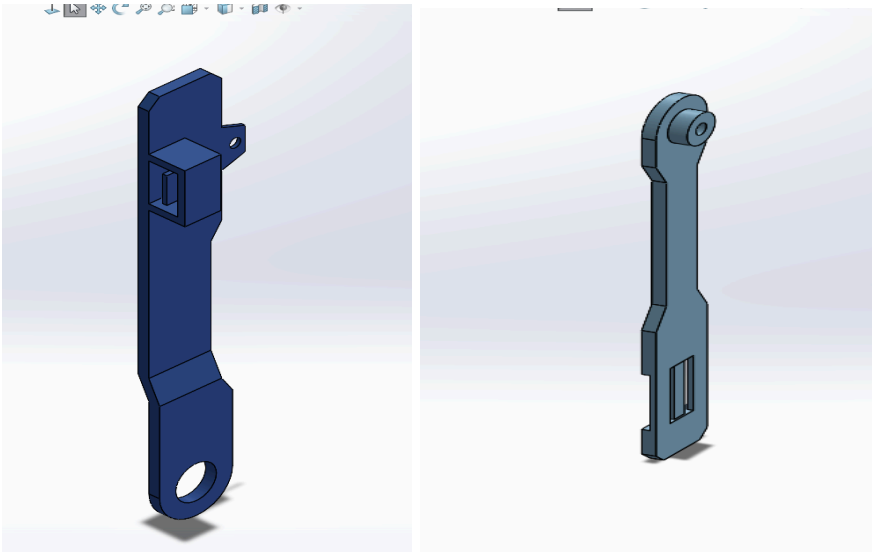

- Fasteners and connectors

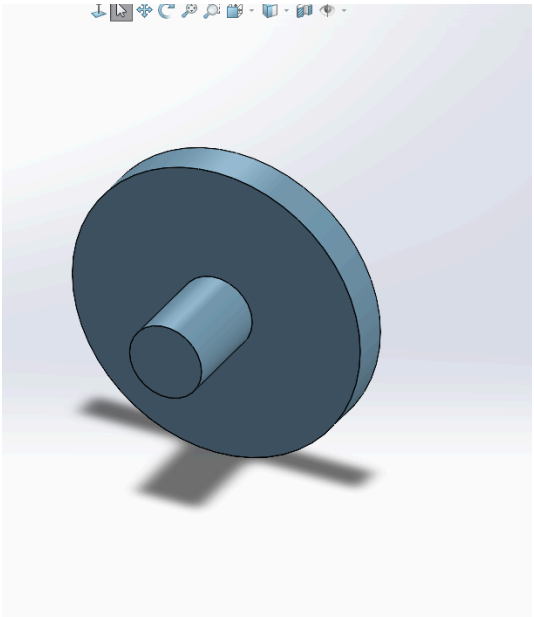

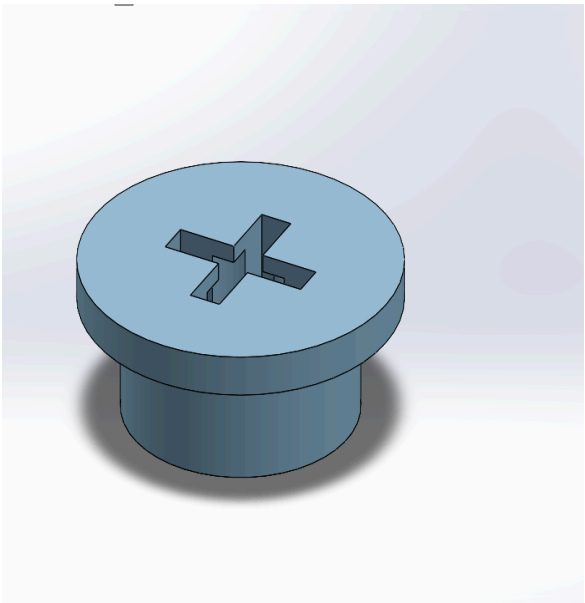

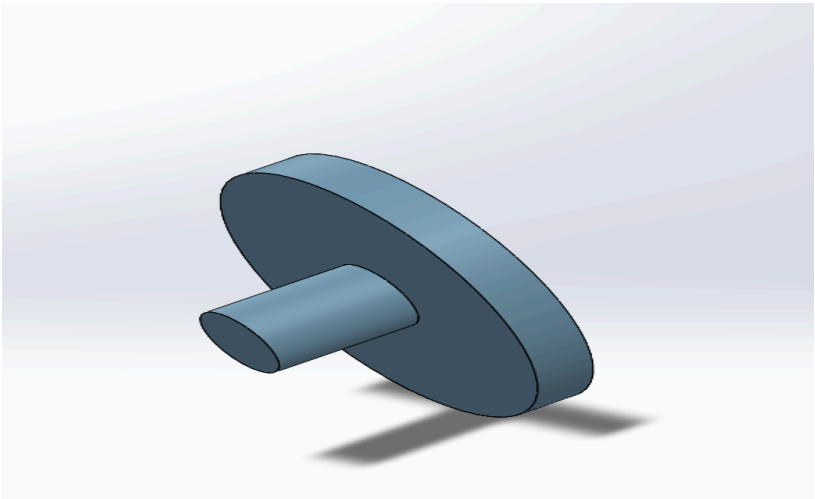

The CAD model was developed in SolidWorks as a fully constrained assembly, where appropriate mates were applied to replicate real physical motion.

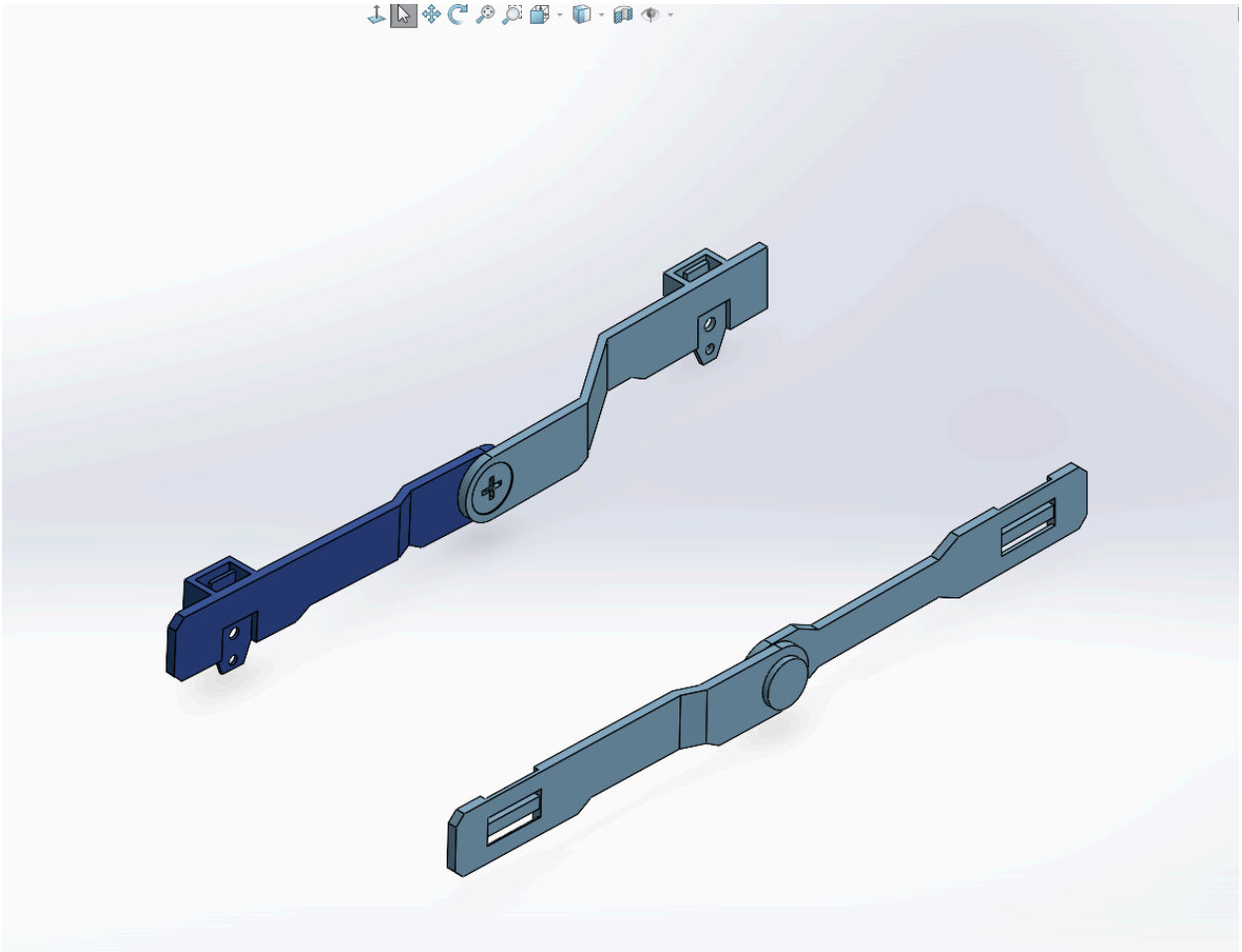

2. Design Decisions and Changes from Phase 1

Several improvements were made to the design based on Phase 1 analysis:

- Geometry refinement:
  Plate dimensions and hole locations were adjusted to improve load distribution and reduce stress concentration.
- Simplification of mechanism:
  The hinge design was simplified to ensure manufacturability and ease of assembly.
- Material considerations:
  The design was adapted for 3D printing using materials such as PLA or ABS, considering strength and printability.

These changes improved the overall reliability, manufacturability, and performance of the system.

3.1 Static Stress and Factor of Safety

A critical component (the hinge plate near the hole) was selected for analysis. Using ANSYS, a static structural analysis was performed.

- The model was constrained at the mounting region.
- A load was applied at the hinge interface to simulate real operating conditions.
- Static Stress, Deformation, and Factor of Safety Analysis
- A static structural analysis was performed in ANSYS on the main rigid components of the exoskeleton knee joint assembly. The purpose of this analysis was to evaluate the stress distribution, deformation, and factor of safety of the structural parts under the assumed loading condition.
- In the real assembly, the brace is attached to the leg using straps. However, the straps were not included in the ANSYS model. Their effect was simplified through the selected supports and applied loads. Therefore, the simulation focused only on the rigid structural response of the main hinge-side components.
- The results showed that one side of the assembly experienced a maximum von Mises stress of 5.0635 MPa, while the other side experienced a maximum von Mises stress of 3.0716MPa. This indicates that the right side carries the larger portion of the applied load and is the more critical component in the assembly.
- The total deformation results also showed a difference between the two sides. The first side had a maximum deformation of 3.0738 mm, while the second side had a maximum deformation of only 0.045732 mm. This suggests that the first side is more flexible or more directly loaded than the second side.
- The minimum factor of safety obtained from the simulation was 2.8896, which is significantly greater than 1. This indicates that the analyzed parts are structurally safe under the assumed loading conditions and are not close to yielding.
- Overall, the ANSYS results show that the exoskeleton knee joint assembly has low stress levels and a high factor of safety for the simplified load case. The most critical side of the assembly is the part that reached 5 MPa stress and 3.0738 mm deformation, and this component will be the primary focus for further refinement and prototyping on phase 3.

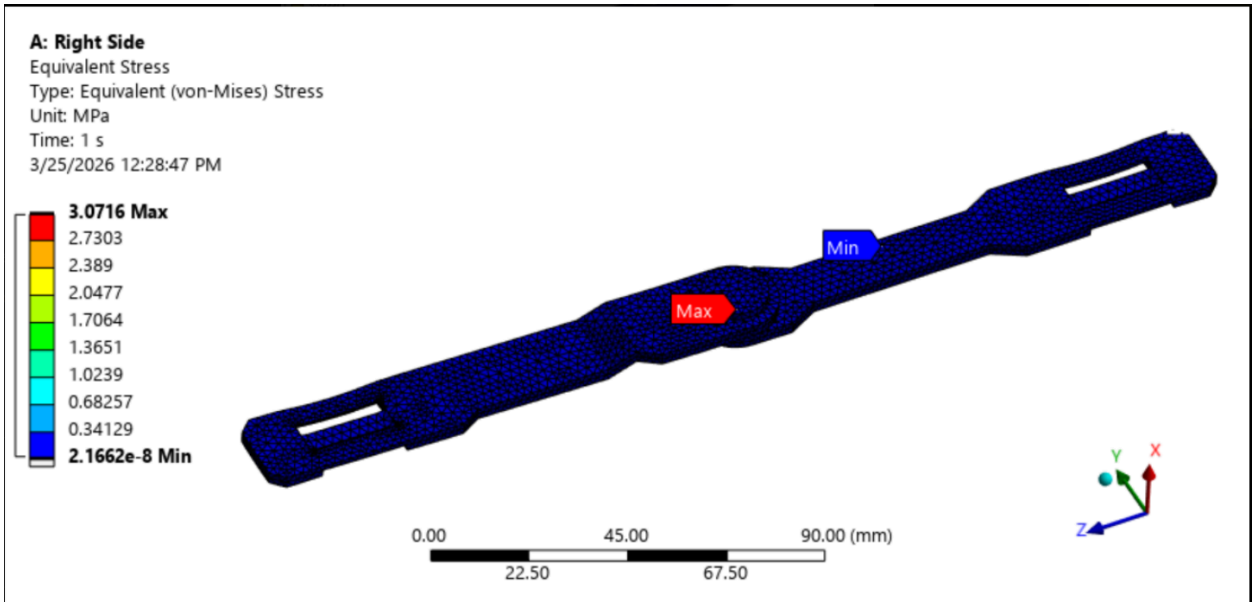
A: Right Side
Equivalent Stress
Type: Equivalent (von-Mises) Stress
Unit: MPa
Time: 1 s
3/25/2026 12:28:47 PM
3.0716 Max
2.7303
2.389
2.0477
1.7064
1.3651
1.0239
0.68257
0.34129
2.1662e-8 Min
Min
Max
0.00
45.00
90.00 (mm)
22.50
67.50
Y
X
Z

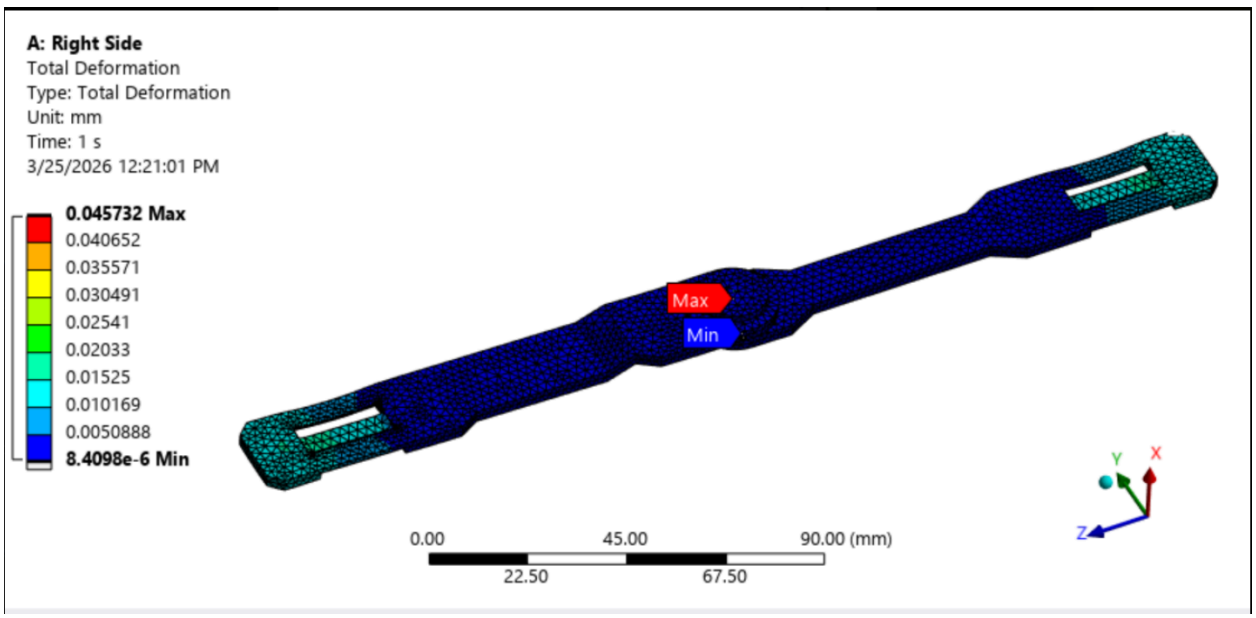
A: Right Side
Total Deformation
Type: Total Deformation
Unit: mm
Time: 1 s
3/25/2026 12:21:01 PM
0.045732 Max
0.040652
0.035571
0.030491
0.02541
0.02033
0.01525
0.010169
0.0050888
8.4098e-6 Min
Max
Min
0.00
45.00
90.00 (mm)
22.50
67.50
Y
X
Z

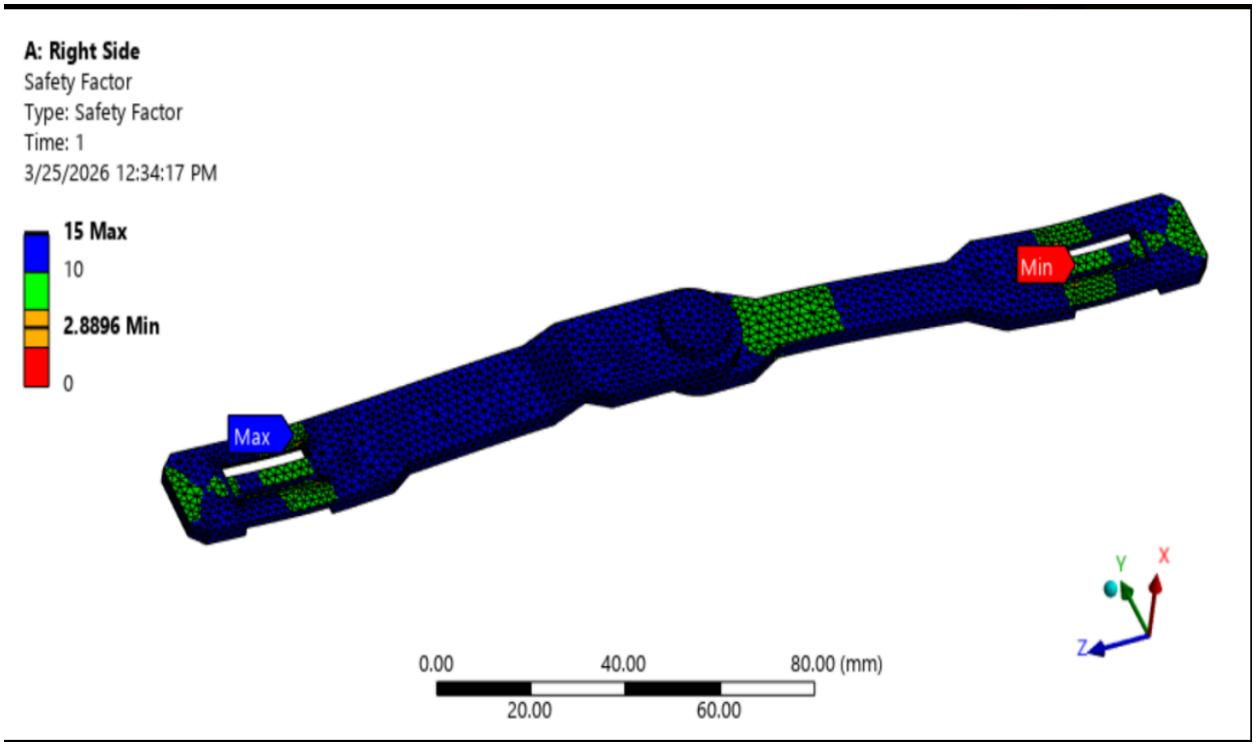
A: Right Side
Safety Factor
Type: Safety Factor
Time: 1
3/25/2026 12:34:17 PM
15 Max
10
2.8896 Min
0
Max
Min
0.00
40.00
80.00 (mm)
20.00
60.00
Y
X
Z

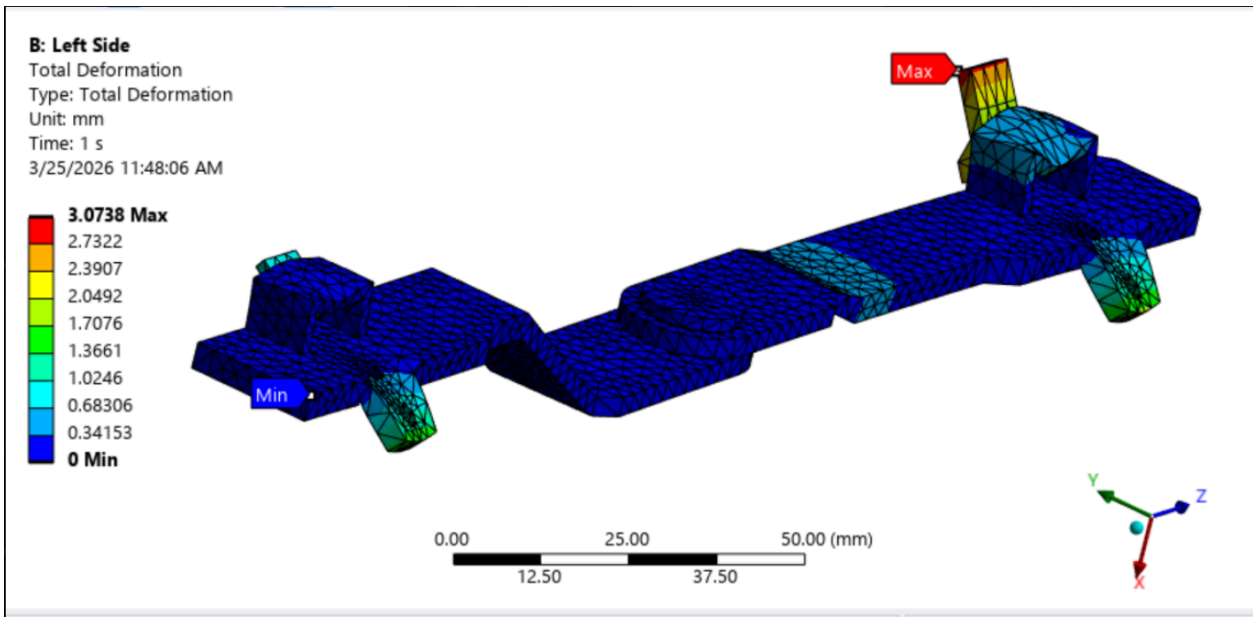
B: Left Side
Total Deformation
Type: Total Deformation
Unit: mm
Time: 1 s
3/25/2026 11:48:06 AM
3.0738 Max
2.7322
2.3907
2.0492
1.7076
1.3661
1.0246
0.68306
0.34153
0 Min
Max
Min
0.00
25.00
50.00 (mm)
12.50
37.50
Y
Z
X

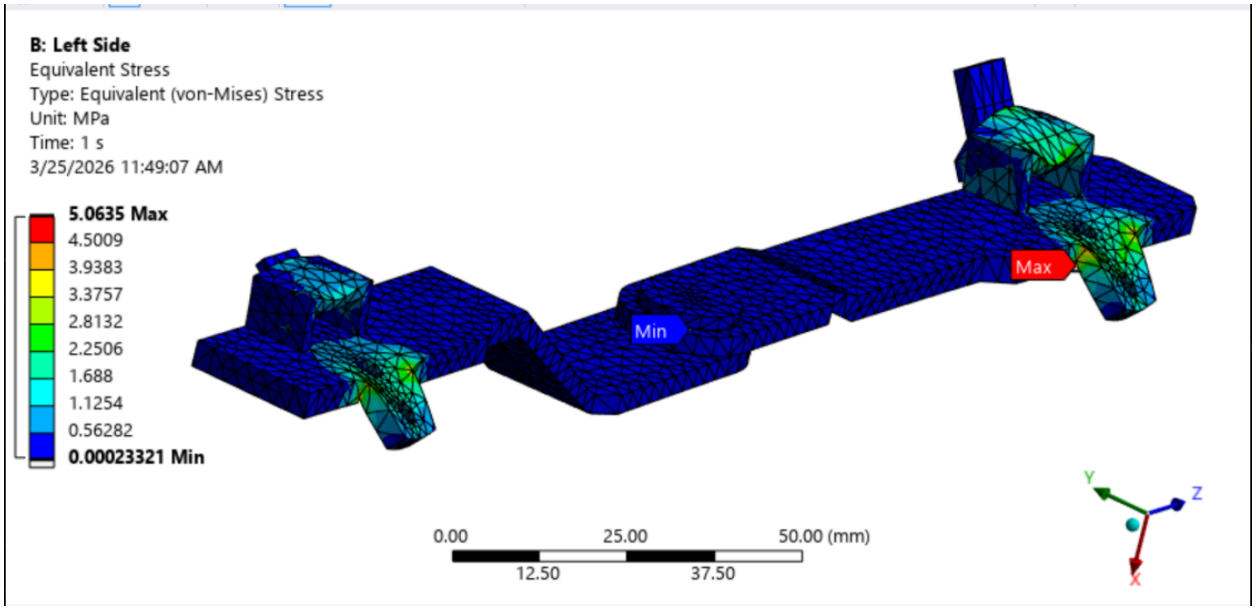

3.2 Fatigue Assessment

The hinge region experiences repeated motion during operation. Therefore, fatigue analysis was considered.

- Alternating stress occurs due to cyclic bending and rotation.
- Mean stress is associated with constant load transmission.

Using simplified fatigue criteria:

- The component is expected to operate within safe limits for repeated loading.
- The hinge hole region remains the most critical fatigue location.

3.4 Interface and Shaft Stress

· The hinge shaft is a critical load-bearing component that connects the upper and lower plates and allows rotational motion of the joint. It is responsible for transferring loads across the hinge while maintaining proper alignment between the components.

· The shaft was analyzed for both deflection and bending stress. Bending stress occurs due to the applied load acting on the shaft, especially if the load is not perfectly centered. Deflection represents how much the shaft bends under load, which can affect alignment and overall performance of the joint.

· Based on the analysis, the shaft experienced relatively low bending stress compared to the material strength, indicating that it is not at risk of yielding. In addition, the amount of

deflection was within acceptable limits, meaning that the shaft remains sufficiently stiff and does not significantly affect the motion of the joint.

· The selected shaft diameter provides a good balance between strength and manufacturability. The results show that the shaft is strong enough to support the applied loads while maintaining structural integrity.

· However, our attention was given to the interface between the shaft and the plate holes, where localized stress concentrations may occur. These areas are critical because they experience direct contact and load transfer

3.5 Bearing Load Check

The hinge interface between the shaft and the plate holes can be modeled as a simple bearing system. When load is applied to the upper plate, it is transferred through the hinge shaft and distributed into the lower plate through the contact surface between the shaft and the hole.

This contact creates bearing stress at the interface. The magnitude of this stress depends on the applied load, the shaft diameter, and the contact area. Based on the estimated loading conditions, the bearing stresses were found to be relatively low.

Due to the reduced scale of the project and the relatively small loads applied, the contact pressure between the shaft and the hole is within acceptable limits. As a result:

- Significant deformation at the interface is not expected
- Wear is expected to be minimal under short-term use

3.6 Global Safety Overview

A global evaluation of the design was performed to identify critical regions and assess the overall structural safety of the system.

The most critical locations in the design include:

- The hinge hole region, where stress concentration occurs due to the presence of a hole and reduced material area
- The shaft/pin interface

These regions are critical because they experience the highest stress levels and are directly involved in load transfer during operation.

The results from the analysis indicate that all components have an acceptable factor of safety under static loading conditions. The minimum factor of safety obtained from simulation was significantly greater than 1, indicating that the design is structurally safe for the assumed loading case.

In addition, the relatively low stress levels suggest that the components are unlikely to experience fatigue failure under repeated motion. However, the hinge hole region remains the most critical area.

4.1 Printability Discussion

Each part of the model was designed with the dimensions of the 3d print bed in mind, so that we can have a successful model that will be printable. The parts were also optimized to avoid the use of supports and extra materials that will cause defects and extra stress concentrations when they are not needed. All parts will be able to be 3D printed well on the bed with varying materials and the ability to be assembled in real life.

4.2 Material types

PLA: This material will be used for the solid parts of our system to ensure good structural integrity and rigidity. This will help our model succeed by being a solid material that has good adhesion and performs well under stress.

TPU: TPU is a flex material that will be used for the straps on our system to bring together the solid material. This is a good option for user comfortability as it is flexible and more rubbery than PLA. TPU is also known to have great adhesion and perform well under stress.