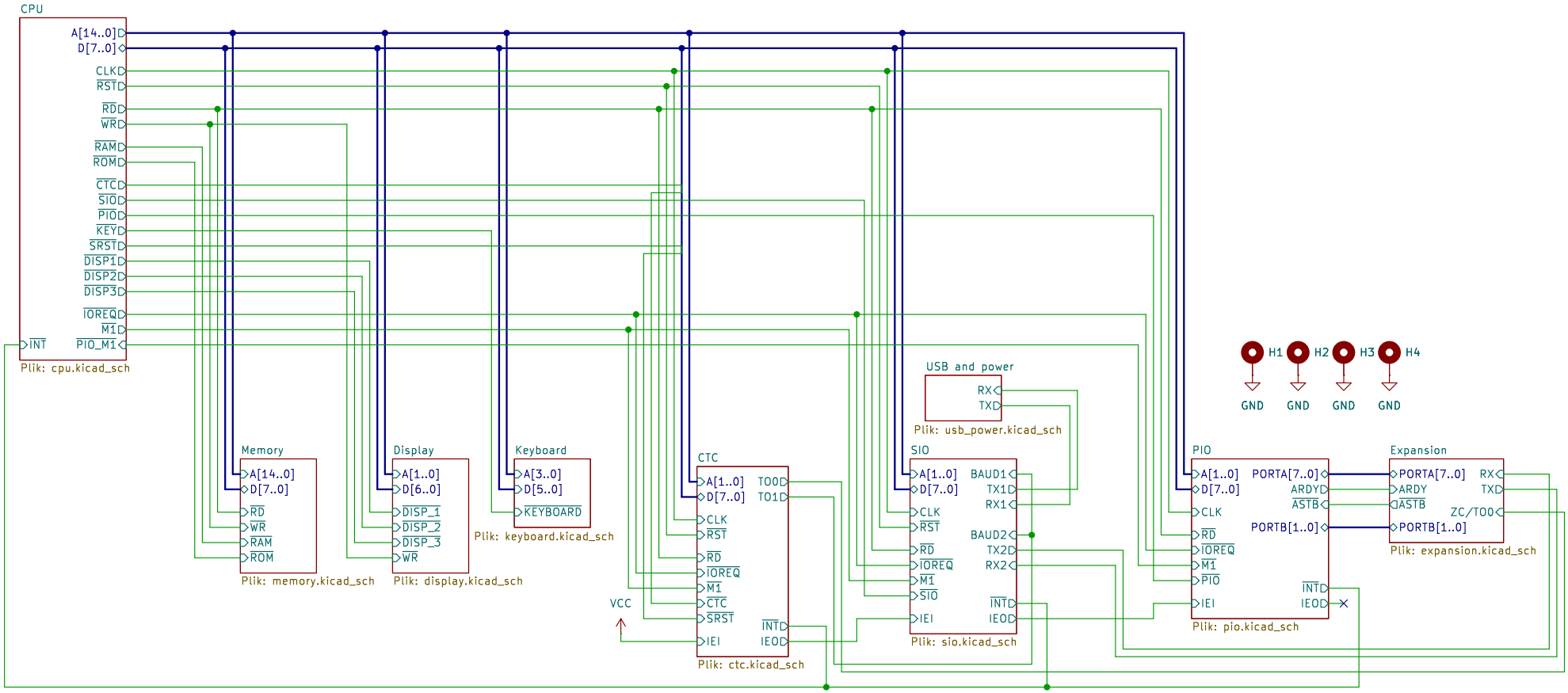

A.K.

Sheet: /

File: pocket80.kicad_sch

Title: Pocket80

Size: A4	Date: 2025-12-28	Rev: C
KiCad E.D.A. 9.0.6		Id: 1/10

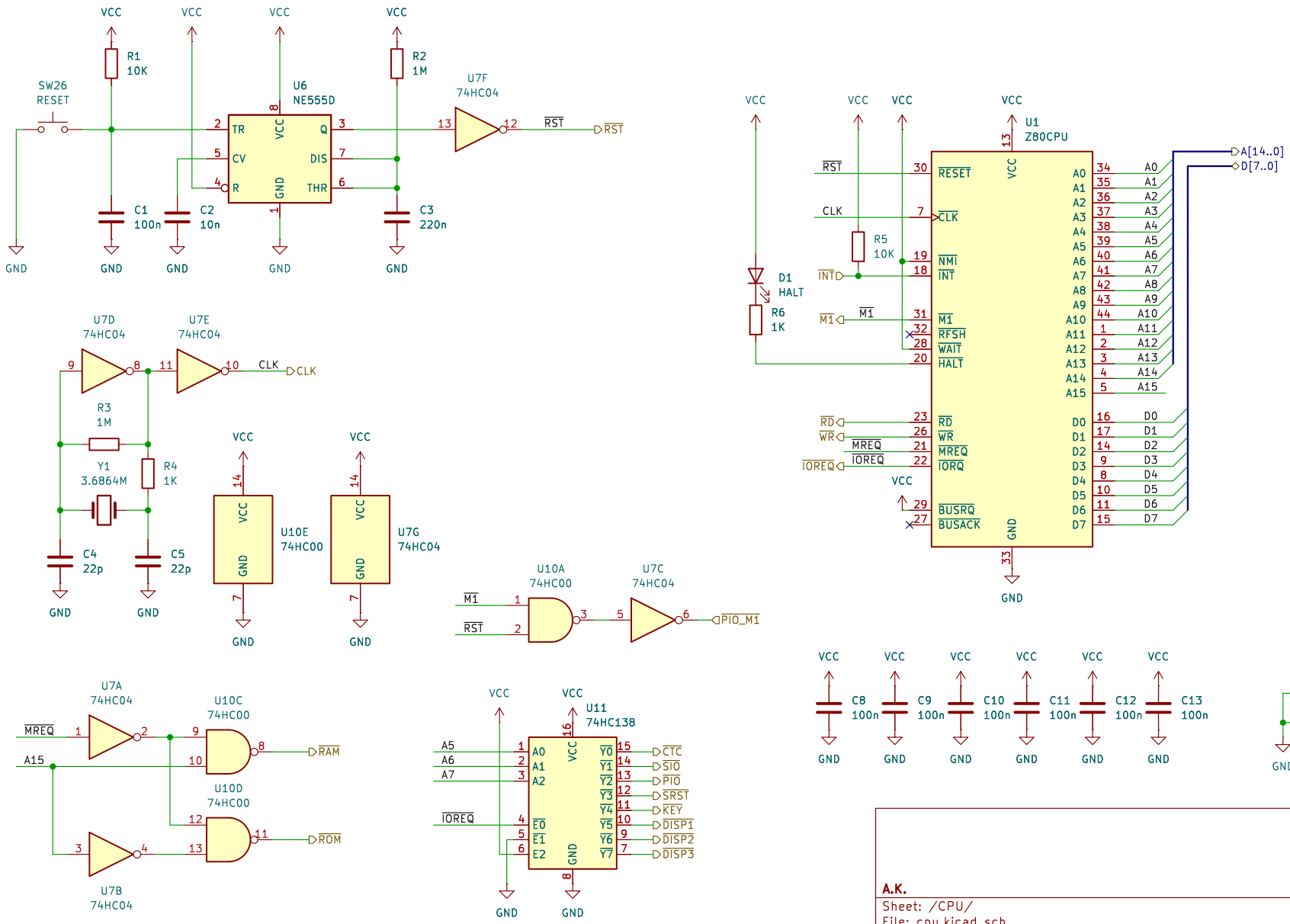

A.K.

Sheet: /CPU/

File: cpu.kicad_sch

Title: CPU, basics and glue logic

Size: A4	Date: 2025-12-28	Rev: C
KiCad E.D.A. 9.0.6		Id: 2/10

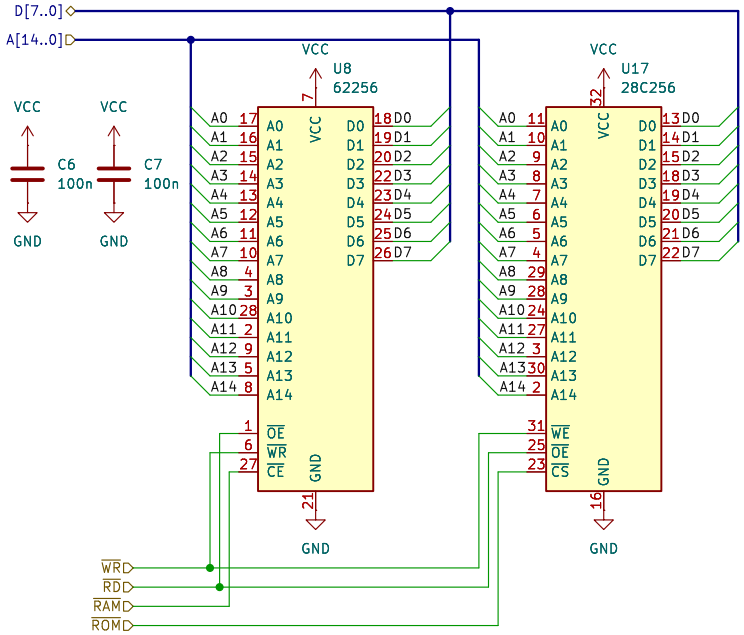

A.K.

Sheet: /Memory/

File: memory.kicad_sch

Title: Memory

Size: A5	Date: 2025-12-28	**Rev: C**
KiCad E.D.A. 9.0.6		Id: 3/10

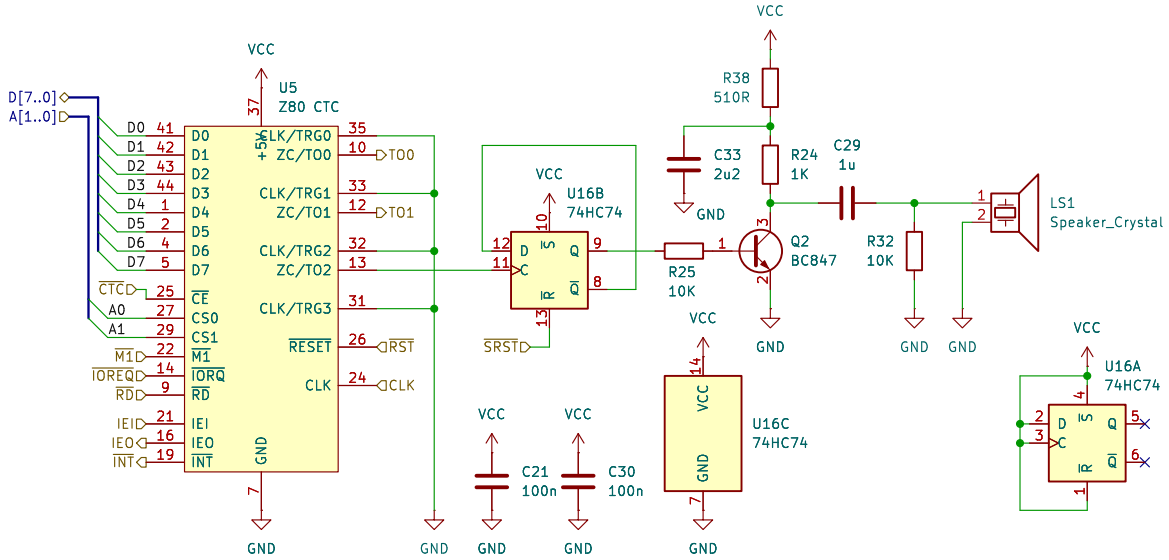

A.K.

Sheet: /CTC/

File: ctc.kicad_sch

Title: Z80 CTC

Size: A5	Date: 2025-12-28	Rev: C
KiCad E.D.A. 9.0.6		Id: 5/10

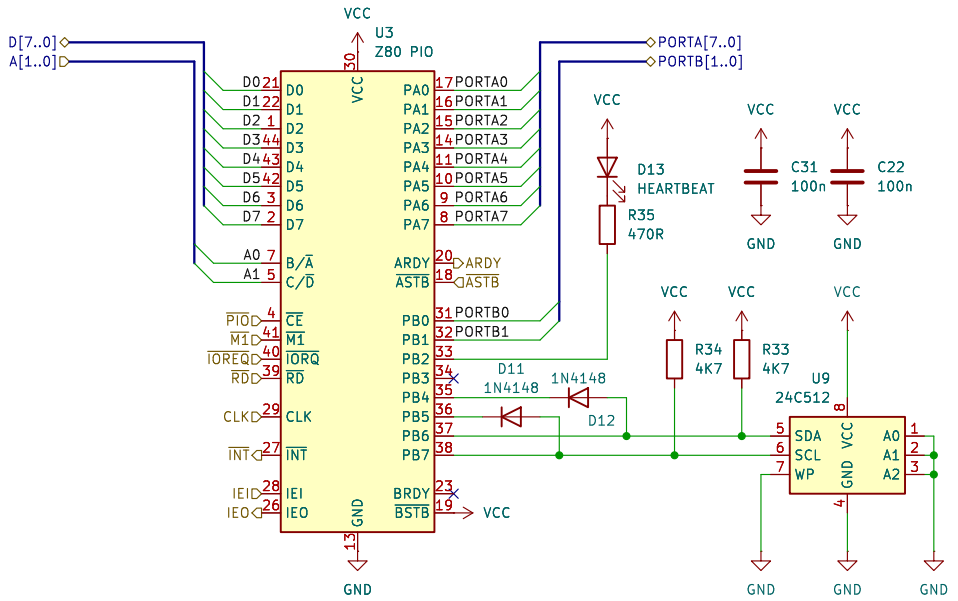

A.K.

Sheet: /PIO/

File: pio.kicad_sch

Title: Z80 PIO

Size: A4	Date: 2025-12-28	Rev: C
KiCad E.D.A. 9.0.6		Id: 6/10

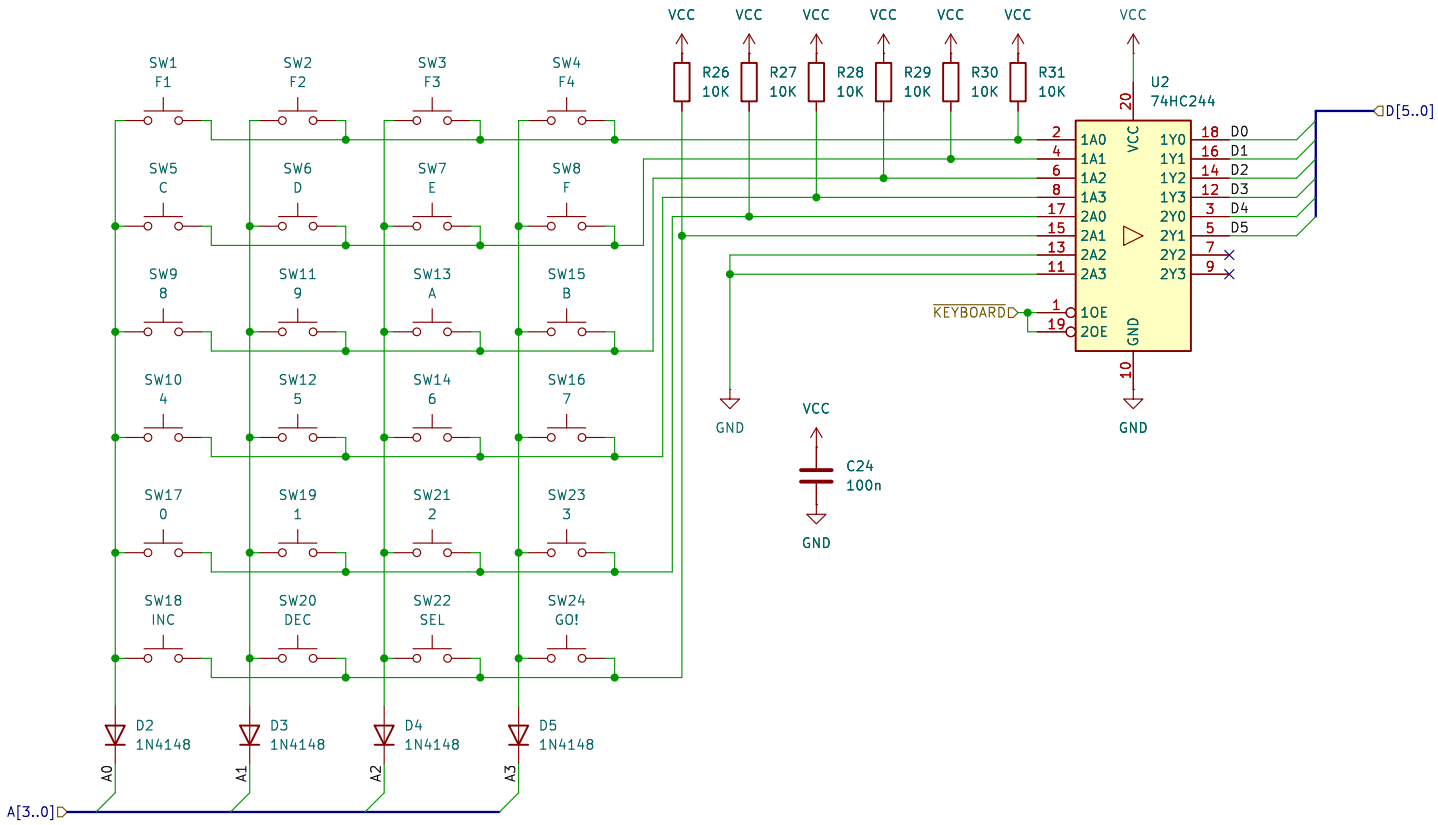

A.K.

Sheet: /Keyboard/

File: keyboard.kicad_sch

Title: Matrix keyboard

Size: A4	Date: 2025-12-28	Rev: C
KiCad E.D.A. 9.0.6		Id: 7/10

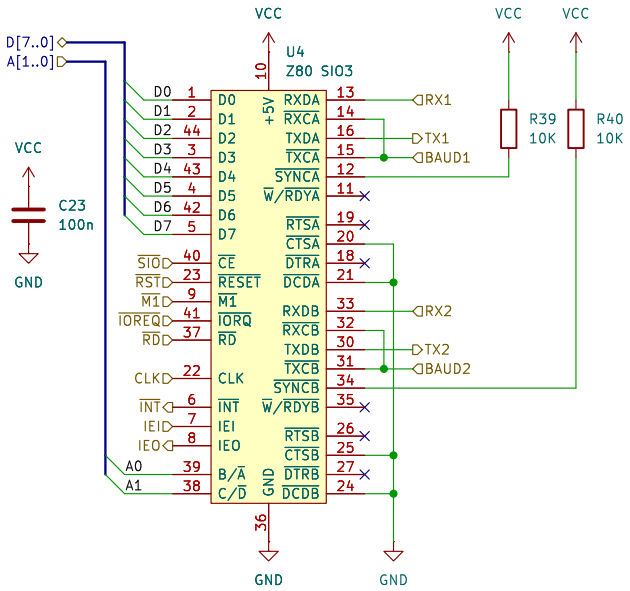

A.K.

Sheet: /SIO/

File: sio.kicad_sch

Title: Z80 SIO

Size: A5	Date: 2025-12-28	Rev: C
KiCad E.D.A. 9.0.6		Id: 7/10

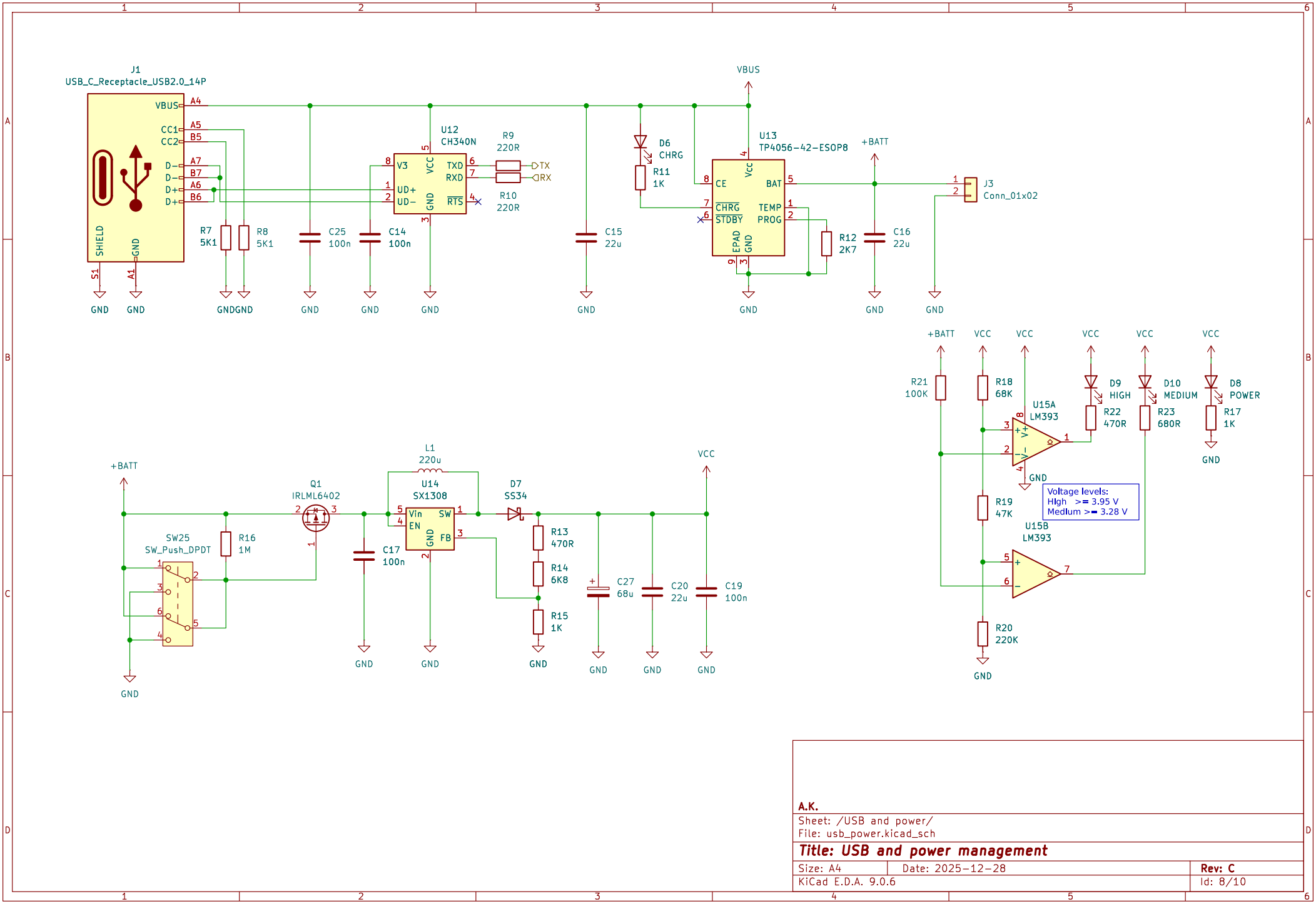

A.K.

Sheet: /USB and power/

File: usb_power.kicad_sch

Title: USB and power management

Size: A4	Date: 2025−12−28	Rev: C
KiCad E.D.A. 9.0.6		Id: 8/10

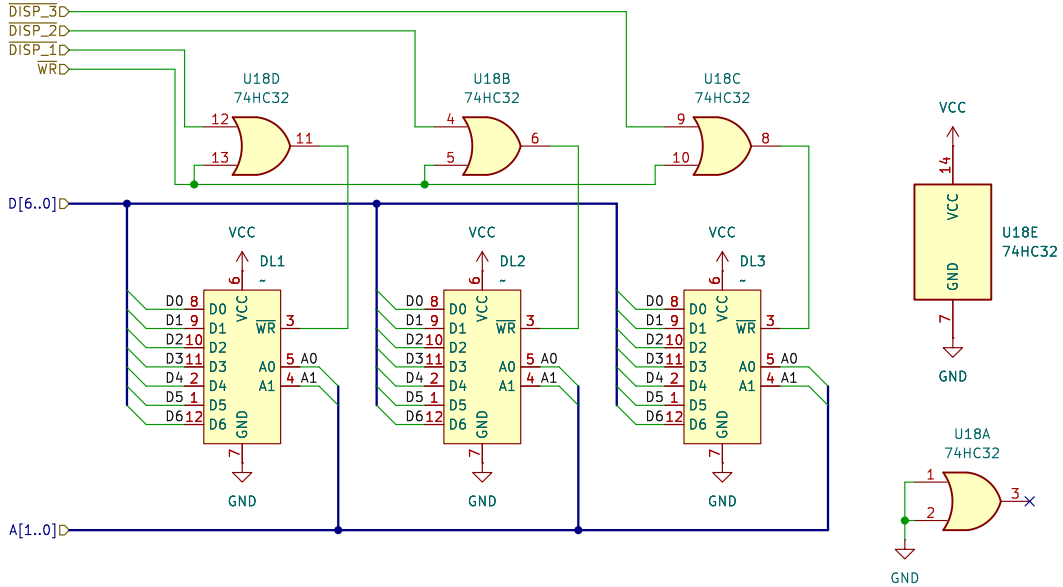

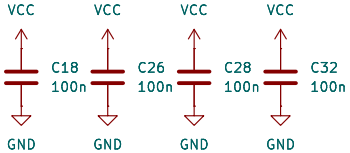

A.K.

Sheet: /Display/

File: display.kicad_sch

Title: DL1414 display

Size: A5	Date: 2025-12-28	Rev: C
KiCad E.D.A. 9.0.6		Id: 9/10

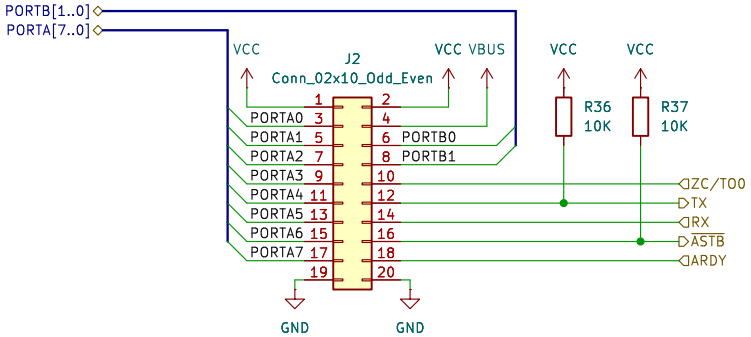

A.K.

Sheet: /Expansion/
File: expansion.kicad_sch

Title: Expansion port

Size: A5	Date: 2025-12-28	**Rev: C**
KiCad E.D.A. 9.0.6		Id: 10/10