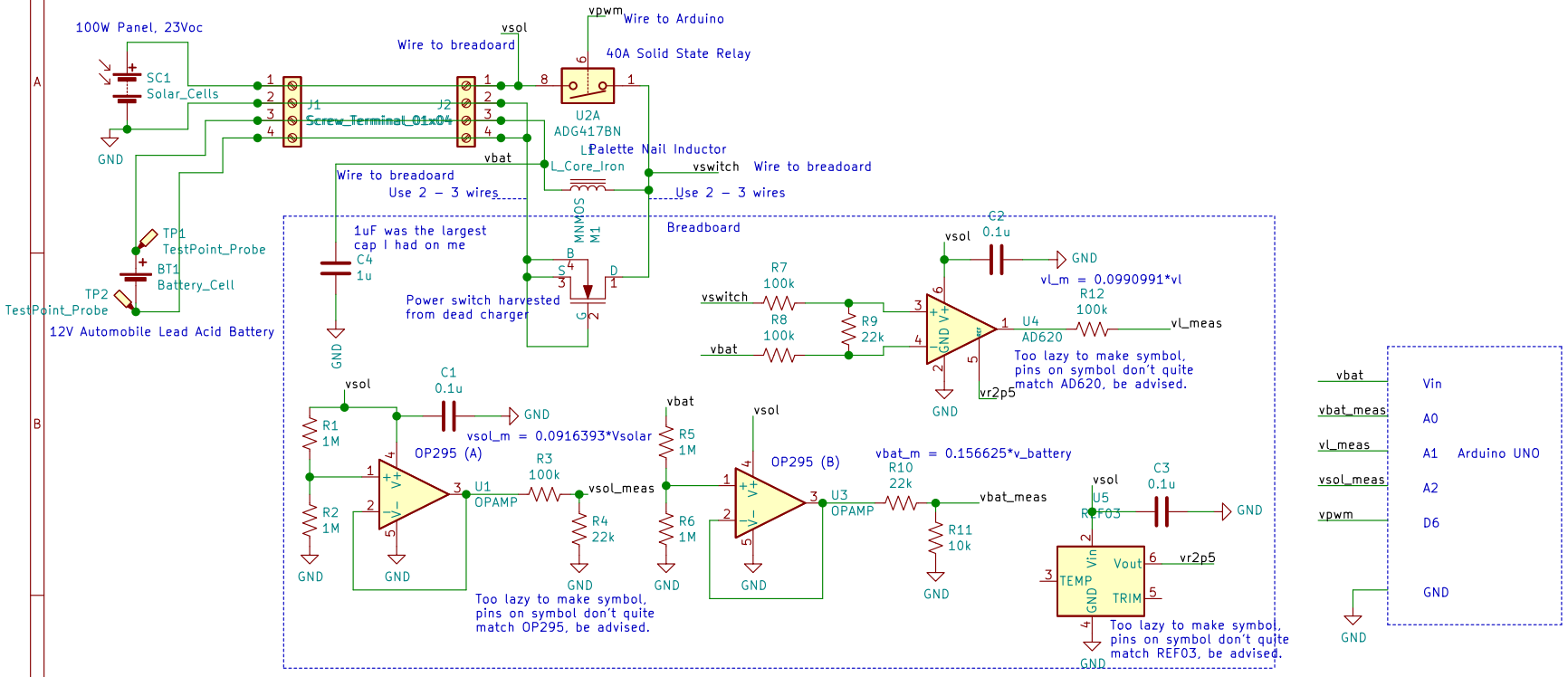

Sheet: /
File: solar_charger_proto.sch

Title: Street Solar Charger

Size: A4	Date:	Rev:
KiCad E.D.A. kicad 5.1.5+dfsg1-2build2		Id: 1/1