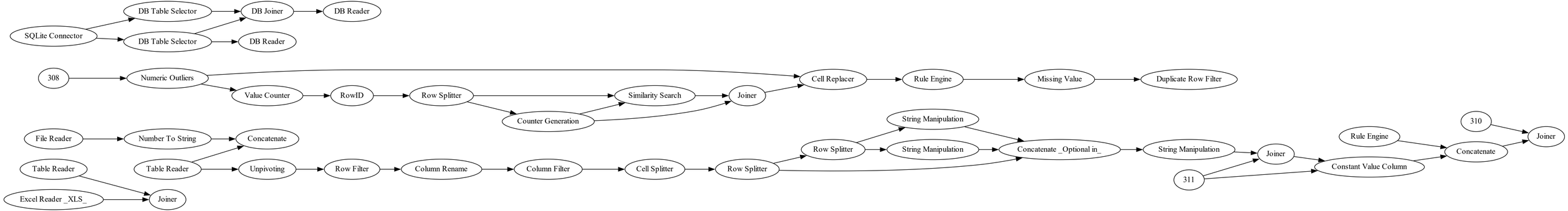
SQLite Connector
DB Table Selector
DB Table Selector
DB Joiner
DB Reader
DB Reader
308
Numeric Outliers
Value Counter
RowID
Row Splitter
Counter Generation
Similarity Search
Joiner
Cell Replacer
Rule Engine
Missing Value
Duplicate Row Filter
File Reader
Number To String
Concatenate
Table Reader
Table Reader
Unpivoting
Row Filter
Column Rename
Column Filter
Cell Splitter
Row Splitter
Excel Reader _XLS_
Joiner
Row Splitter
String Manipulation
String Manipulation
Concatenate _Optional in_
String Manipulation
Joiner
311
Constant Value Column
Rule Engine
Concatenate
310
Joiner