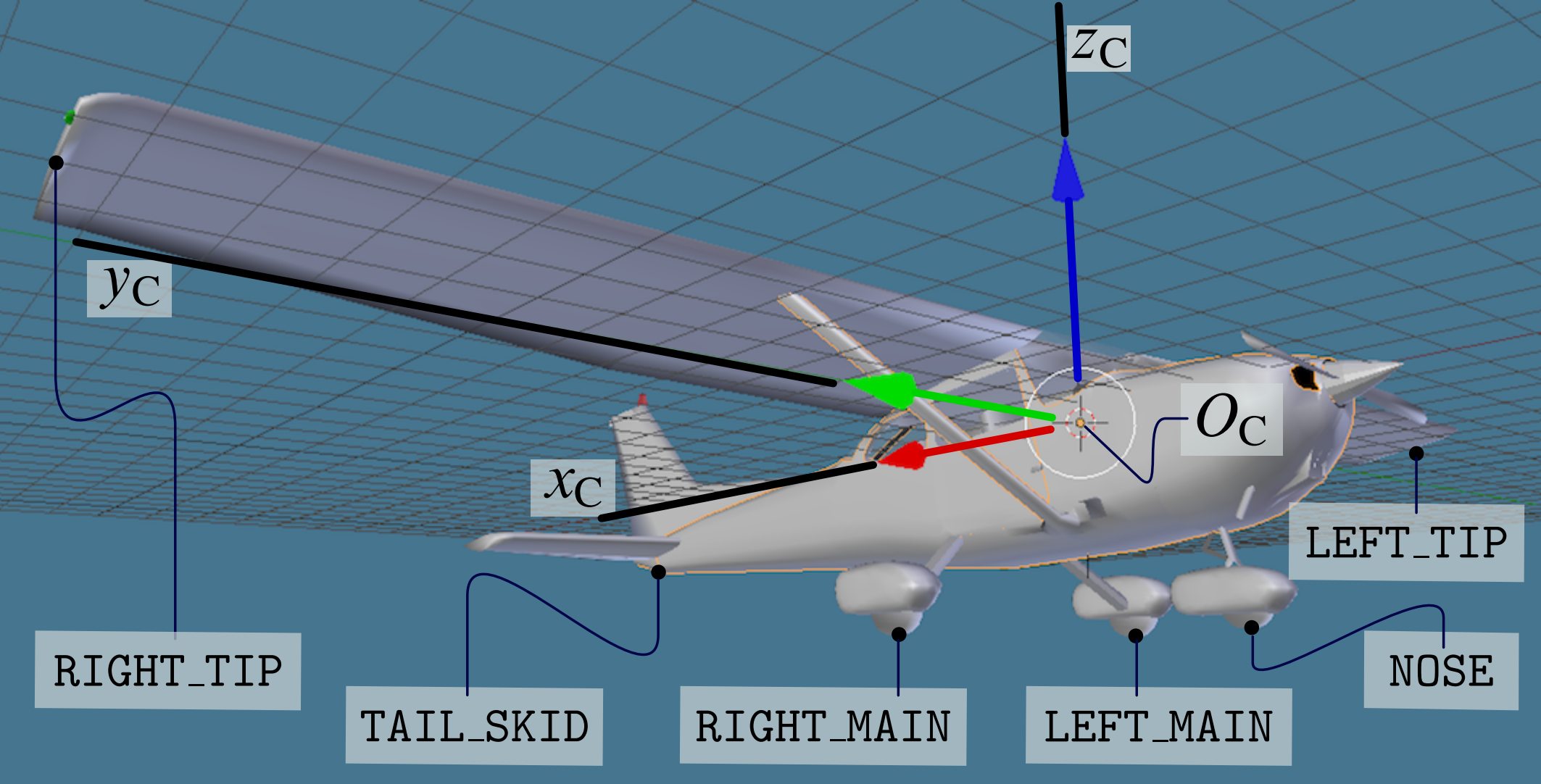
z_C
y_C
O_C
x_C
LEFT_TIP
RIGHT_TIP
TAIL_SKID
RIGHT_MAIN
LEFT_MAIN
NOSE