ITEM NO.	PART NUMBER	DESCRIPTION	QTY.
1	Table Top		1
2	2x4x7.5		4
3	2x4x32in		8
4	2x4x36in		4
5	Shelf Top		1

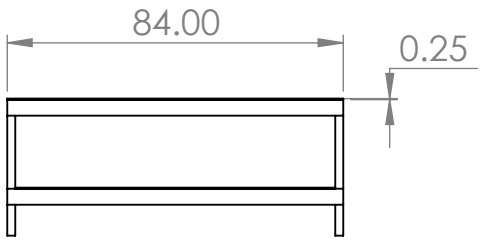

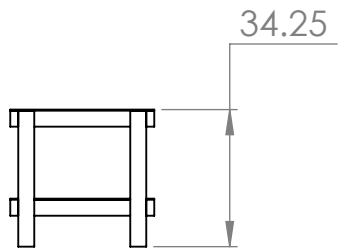

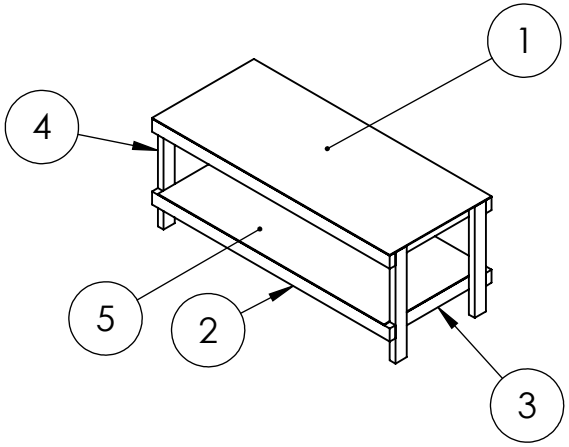

UNLESS OTHERWISE SPECIFIED:
DIMENSIONS ARE IN INCHES
TOLERANCES:
FRACTIONAL ±
ANGULAR: MACH ± BEND ±
TWO PLACE DECIMAL ±
THREE PLACE DECIMAL ±

INTERPRET GEOMETRIC TOLERANCING PER:

MATERIAL

FINISH

	NAME	DATE
DRAWN		mm/dd/yyyy
CHECKED		mm/dd/yyyy
ENG APPR.		mm/dd/yyyy
MFG APPR.		mm/dd/yyyy
Q.A.		

AEG Engineering

TITLE:

SIZE | DWG. NO. Workbench Assembly | REV

SCALE: 1:48 | WEIGHT: | SHEET 1 OF 1

SOLIDWORKS Educational Product. For Instructional Use Only.