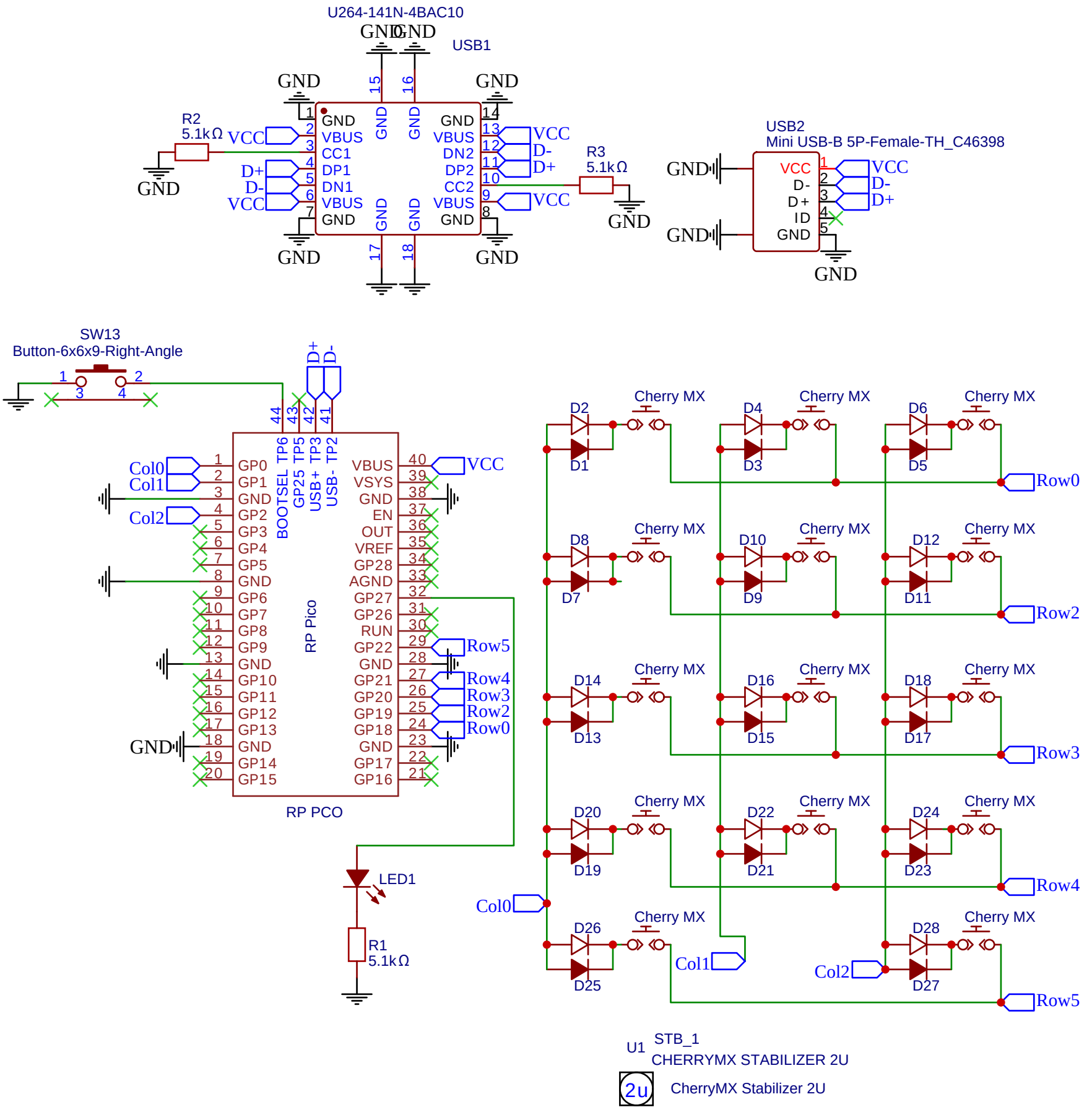
U264-141N-4BAC10
USB1
GND
VCC
D+
D-
R2
5.1kΩ
R3
5.1kΩ
USB2
Mini USB-B 5P-Female-TH_C46398
VCC
D-
D+
ID
SW13
Button-6x6x9-Right-Angle
Col0
Col1
Col2
Row0
Row2
Row3
Row4
Row5
RP Pico
RP PCO
BOOTSEL TP6
GP25 TP5
USB+ TP3
USB- TP2
LED1
R1
5.1kΩ
Cherry MX
U1
STB_1
CHERRYMX STABILIZER 2U
2u
CherryMX Stabilizer 2U