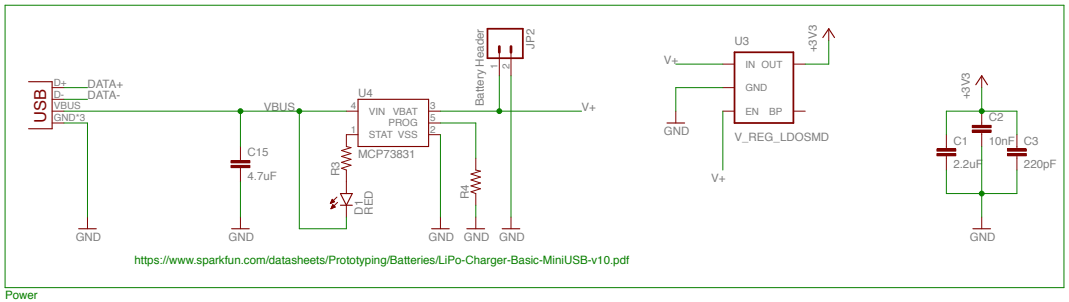

Power

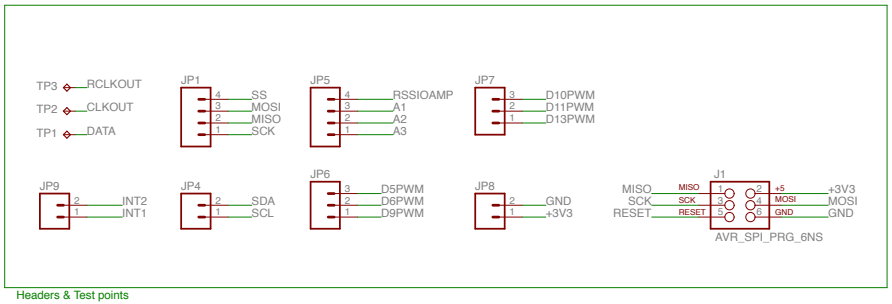

Headers & Test points

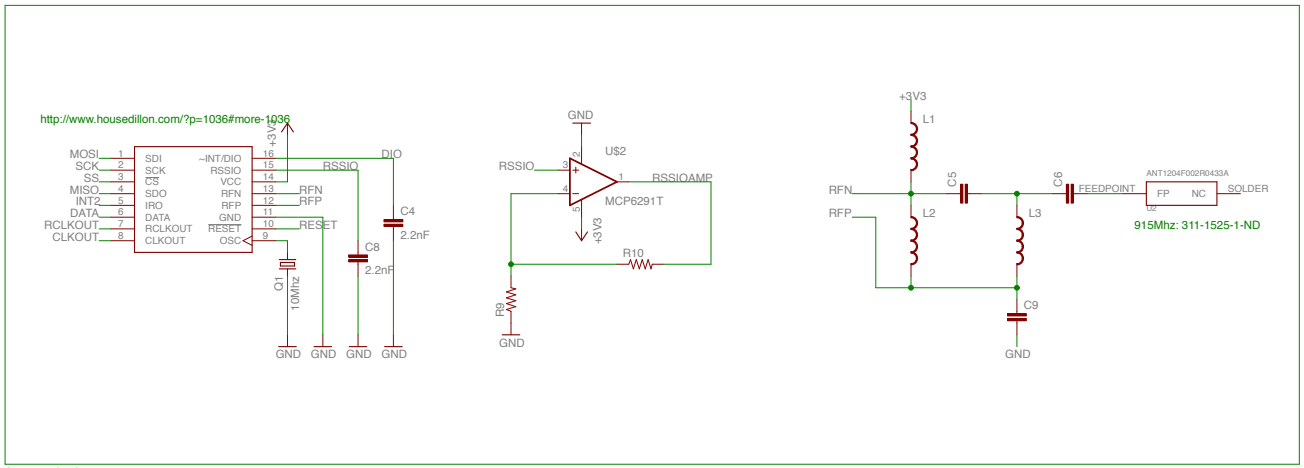

Antenna circuit

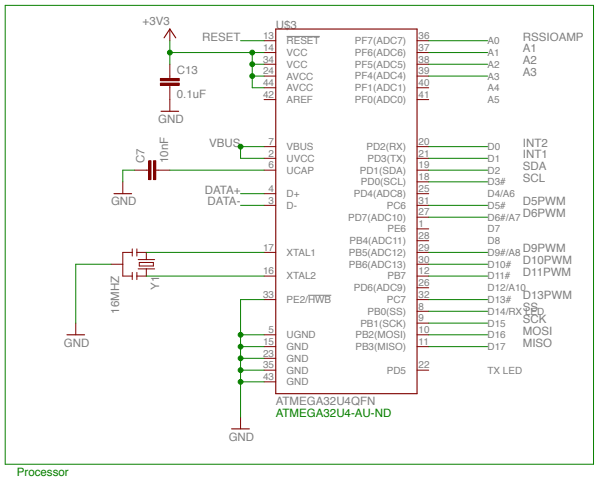

Processor

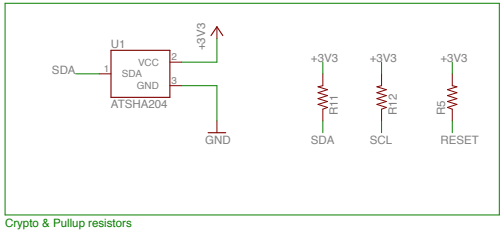

Crypto & Pullup resistors

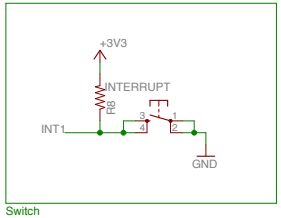

Switch

12/11/14 9:03 PM f=0.61 /Users/diegoaguilera/Documents/eagle/MRF49XA/v2/MRF49XA.sch (Sheet: 1/1)