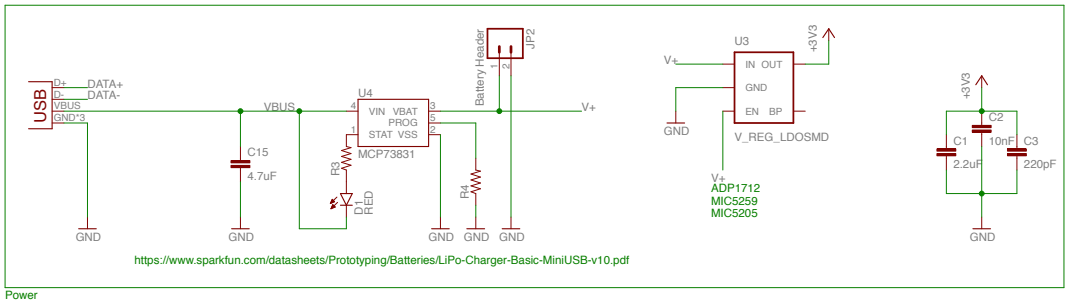

Power

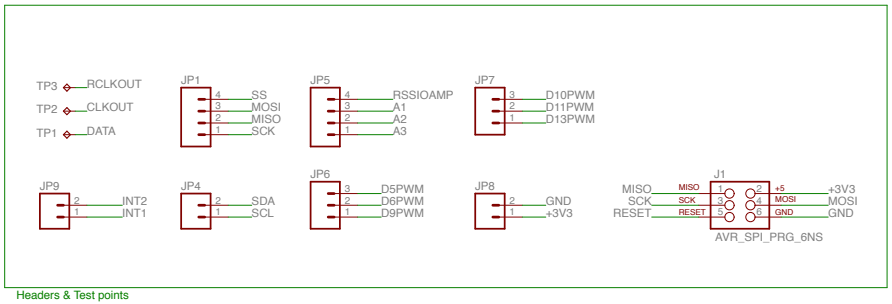

Headers & Test points

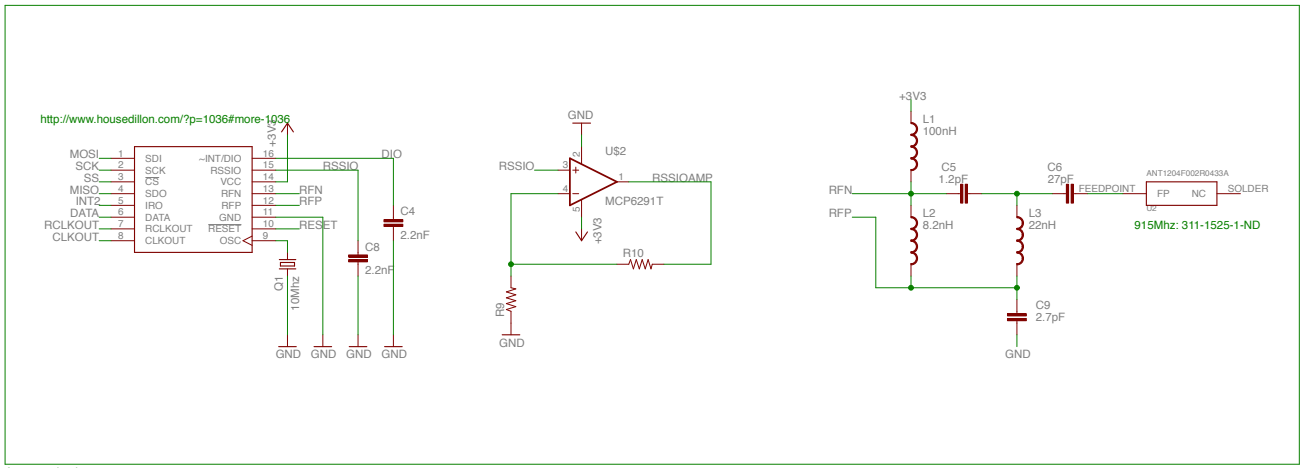

Antenna circuit

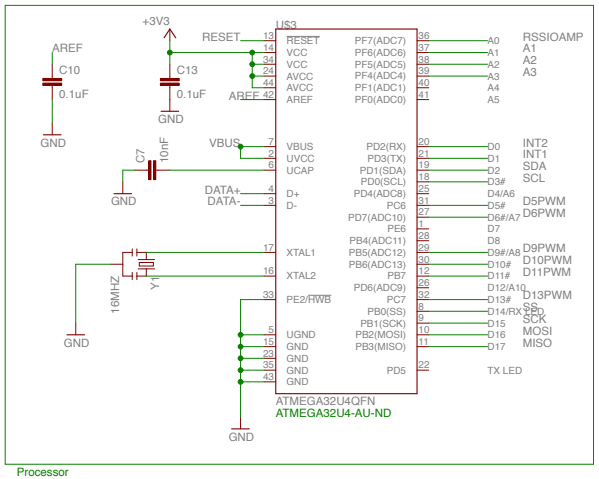

Processor

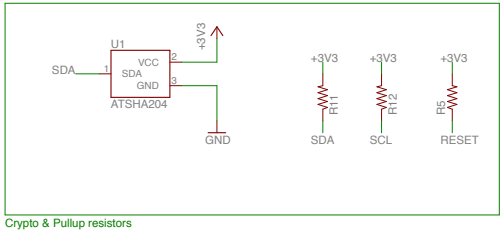

Crypto & Pullup resistors

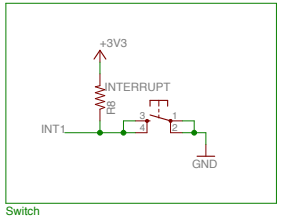

Switch

Board revisions:
-Add light to pin 13 so know when it's booting
-Add power switch on 3V line
-Add switch to boot into bootloader