REVISION RECORD			
LTR	ECO NO:	APPROVED:	DATE:

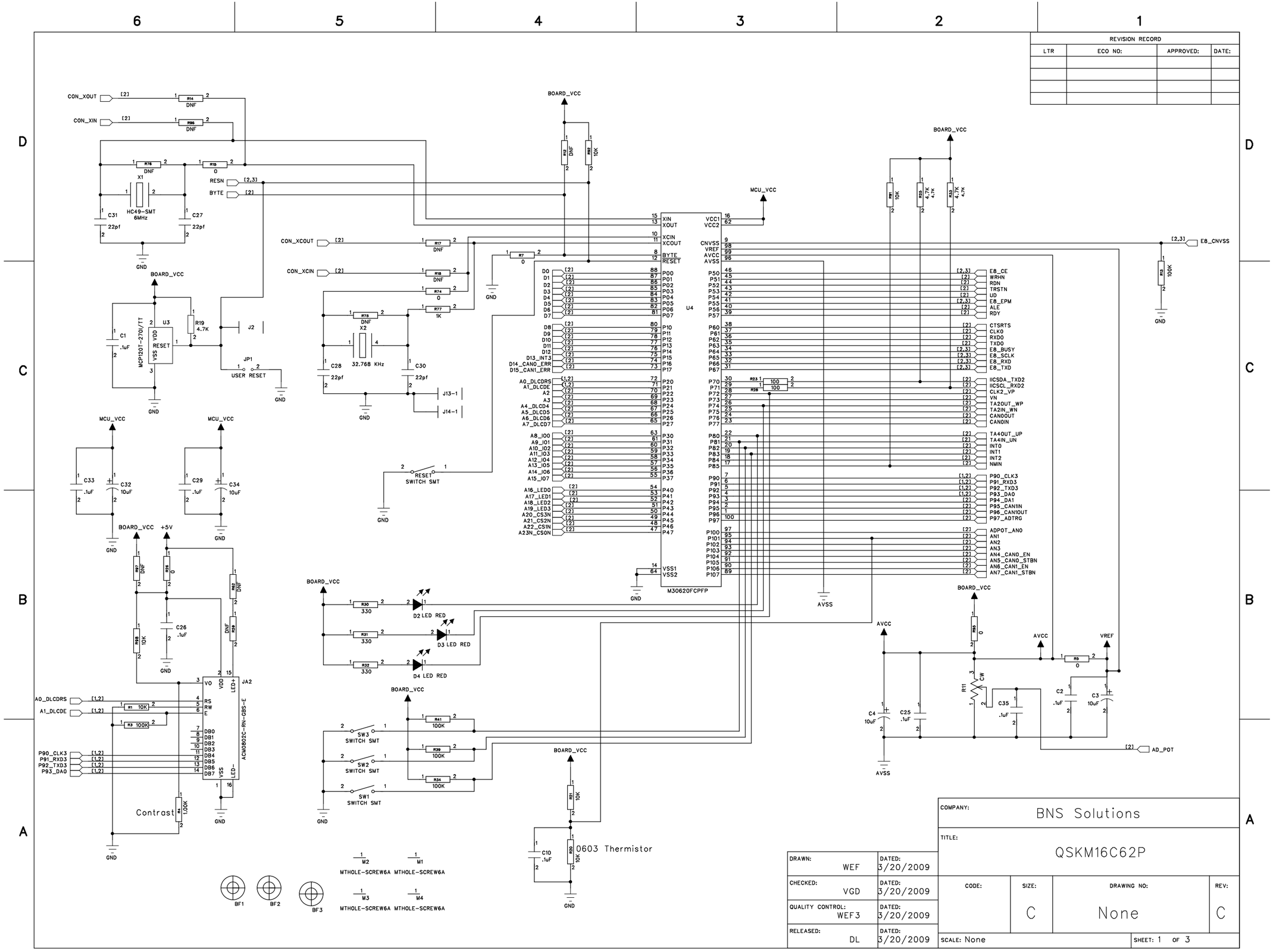

DRAWN: WEF	DATED: 3/20/2009	COMPANY: BNS Solutions	
CHECKED: VGD	DATED: 3/20/2009	TITLE: QSKM16C62P	
QUALITY CONTROL: WEF3	DATED: 3/20/2009	CODE:	SIZE: C / DRAWING NO: None / REV: C
RELEASED: DL	DATED: 3/20/2009	SCALE: None	SHEET: 1 OF 3

REVISION RECORD			
LTR	ECO NO:	APPROVED:	DATE:

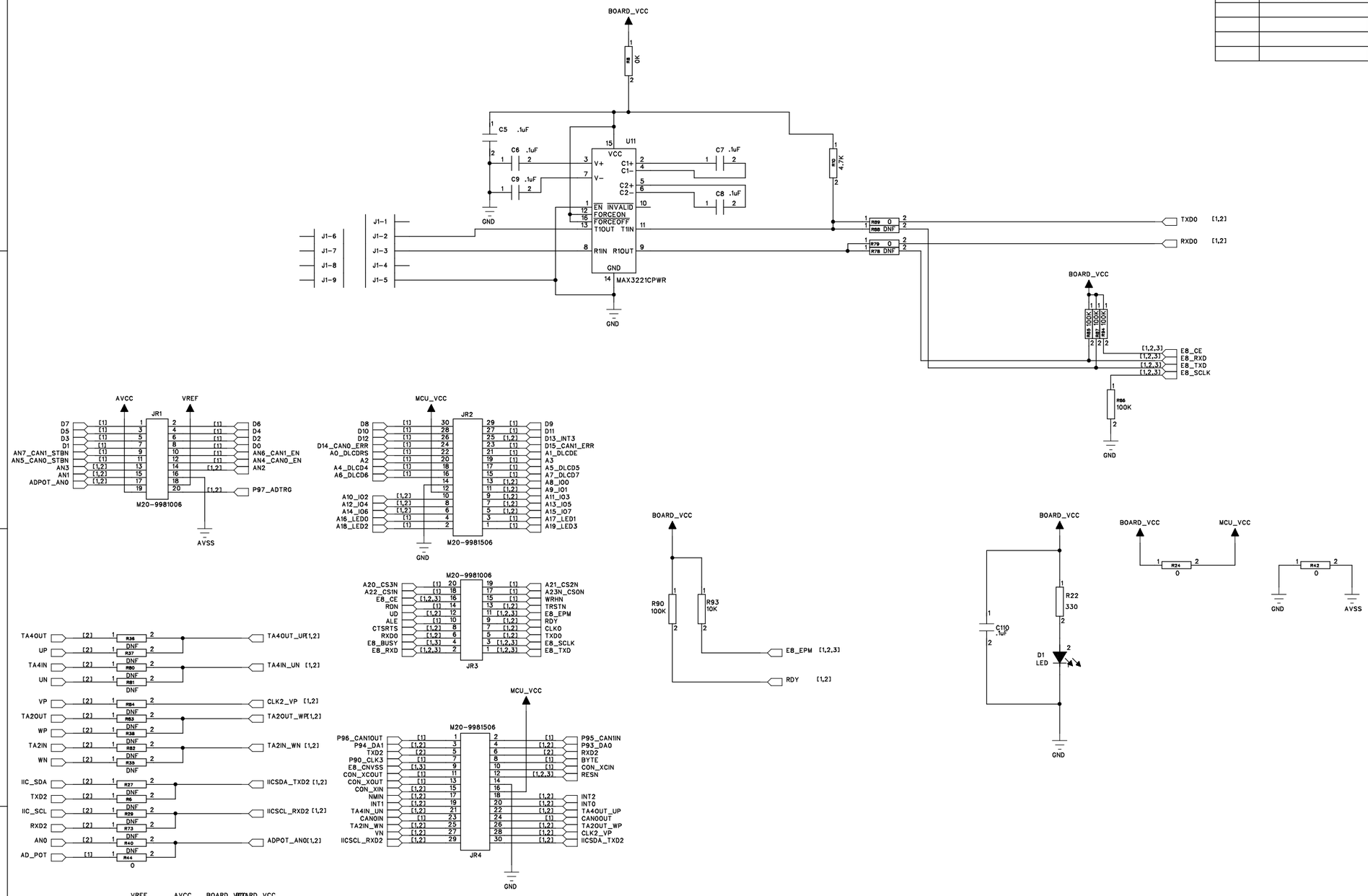

COMPANY:	BNS Solutions		
TITLE:	QSKM16C62P		
DRAWN: WEF	DATED: 3/20/2009	CODE:	SIZE: C
CHECKED: VGD	DATED: 3/20/2009	DRAWING NO: None	REV: C
QUALITY CONTROL: WEF3	DATED: 3/20/2009		
RELEASED: DL	DATED: 3/20/2009	SCALE: None	SHEET: 2 OF 3