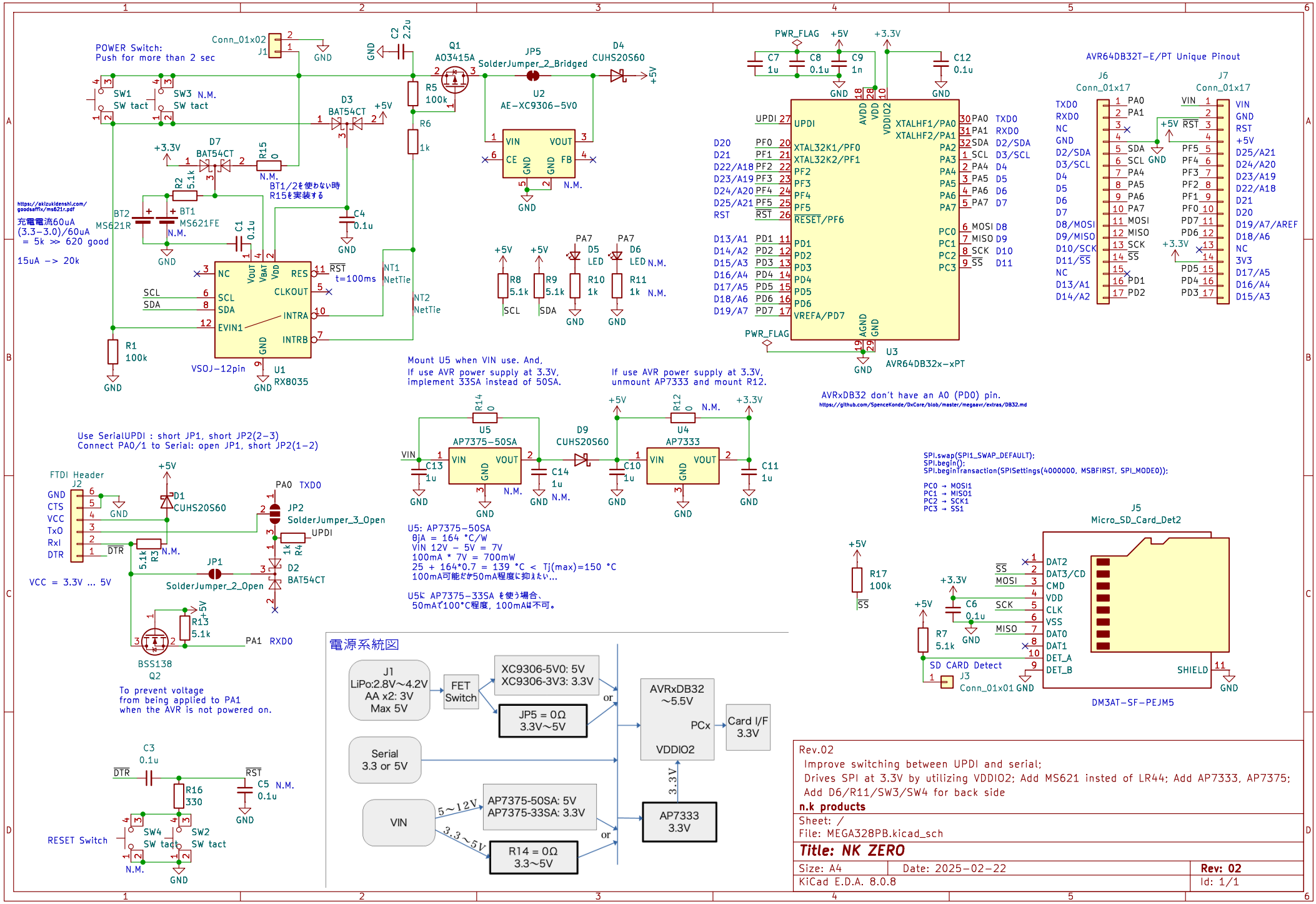

Rev.02
Improve switching between UPDI and serial;
Drives SPI at 3.3V by utilizing VDDIO2; Add MS621 insted of LR44; Add AP7333, AP7375;
Add D6/R11/SW3/SW4 for back side

n.k products

Sheet: /
File: MEGA328PB.kicad_sch

Title: NK ZERO

Size: A4	Date: 2025-02-22	Rev: 02
KiCad E.D.A. 8.0.8		Id: 1/1