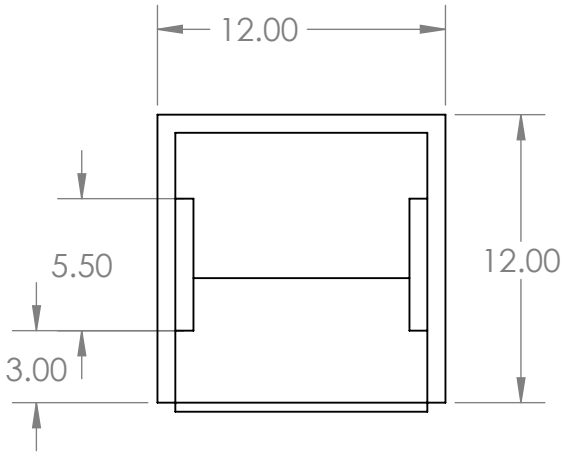


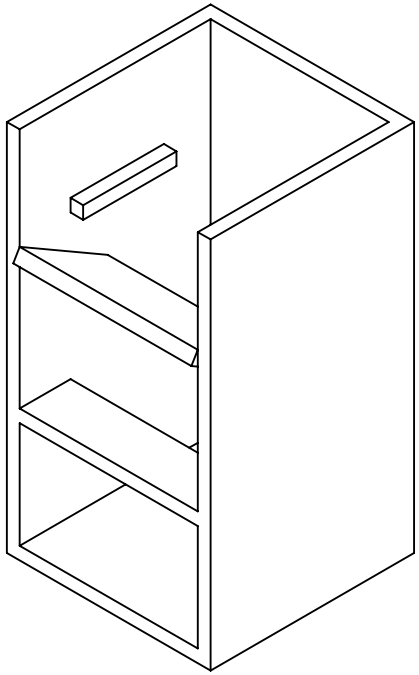

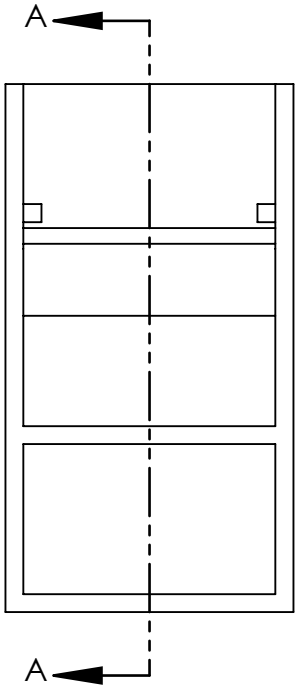


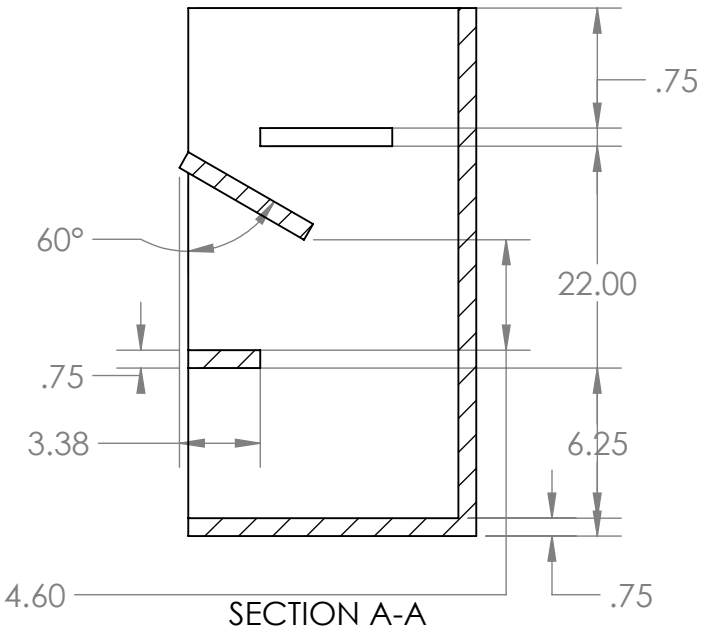


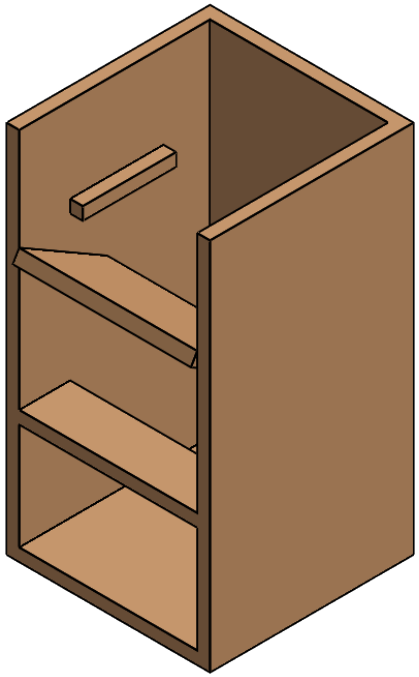

| | | | | | | |
|---|---|---|---|---|---|---|
| MATERIAL Wood | inch | DRAWN BY Amanda | TITLE Wodden Box | | | |
| FINISH Deburr | | DATE 12/01/2019 | SCALE 1:8 | SHEET 1 OF 1 | DWG. NO. EBS1- Part 1 | REV 0 |
| UC Davis | | | | | | |