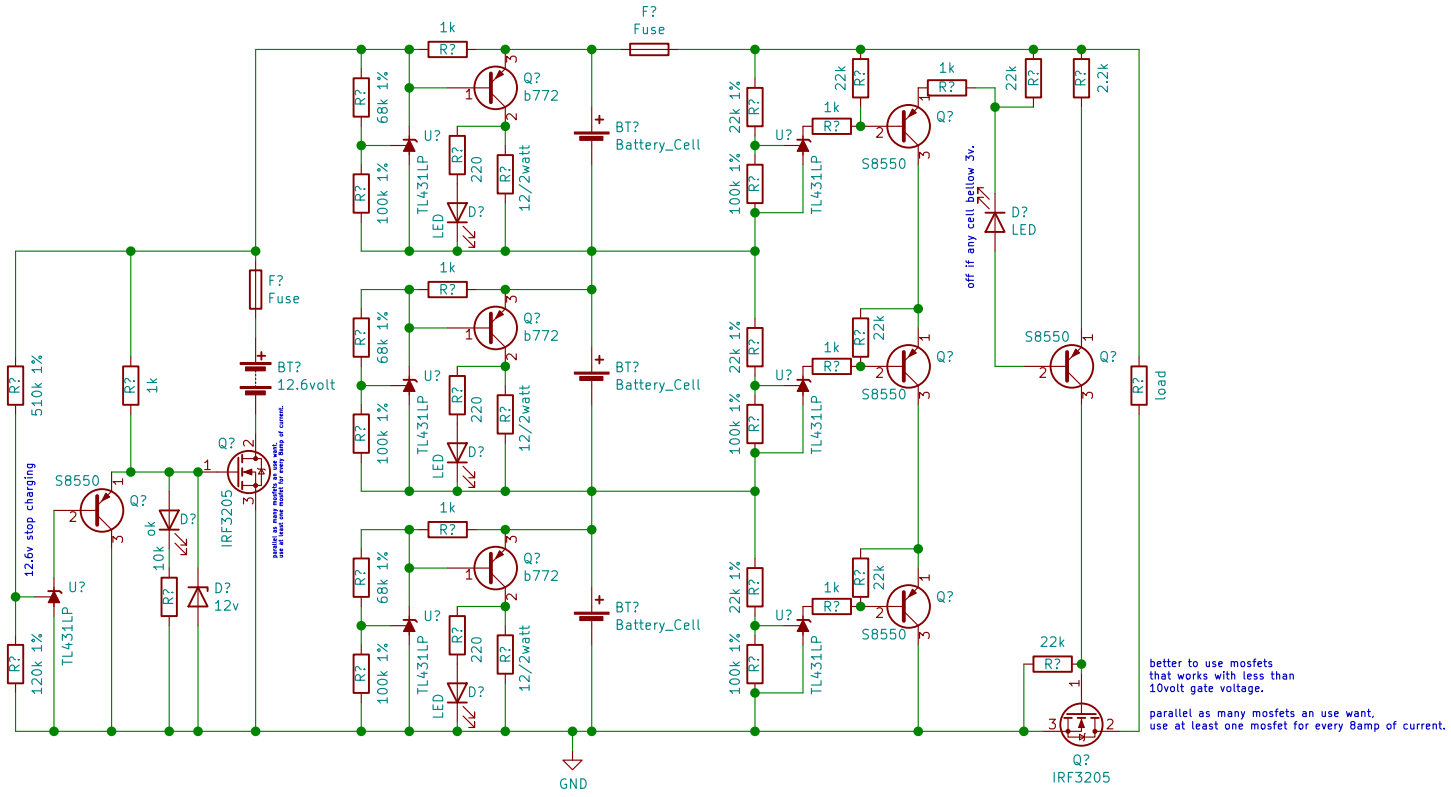

Ahab bahlool

Sheet: /

File: simplebms.sch

Title: easybms

Size: A4	Date: 2022-03-24	**Rev:**
KiCad E.D.A. kicad (5.1.9)-1		Id: 1/1