PLL_TX_RX chain

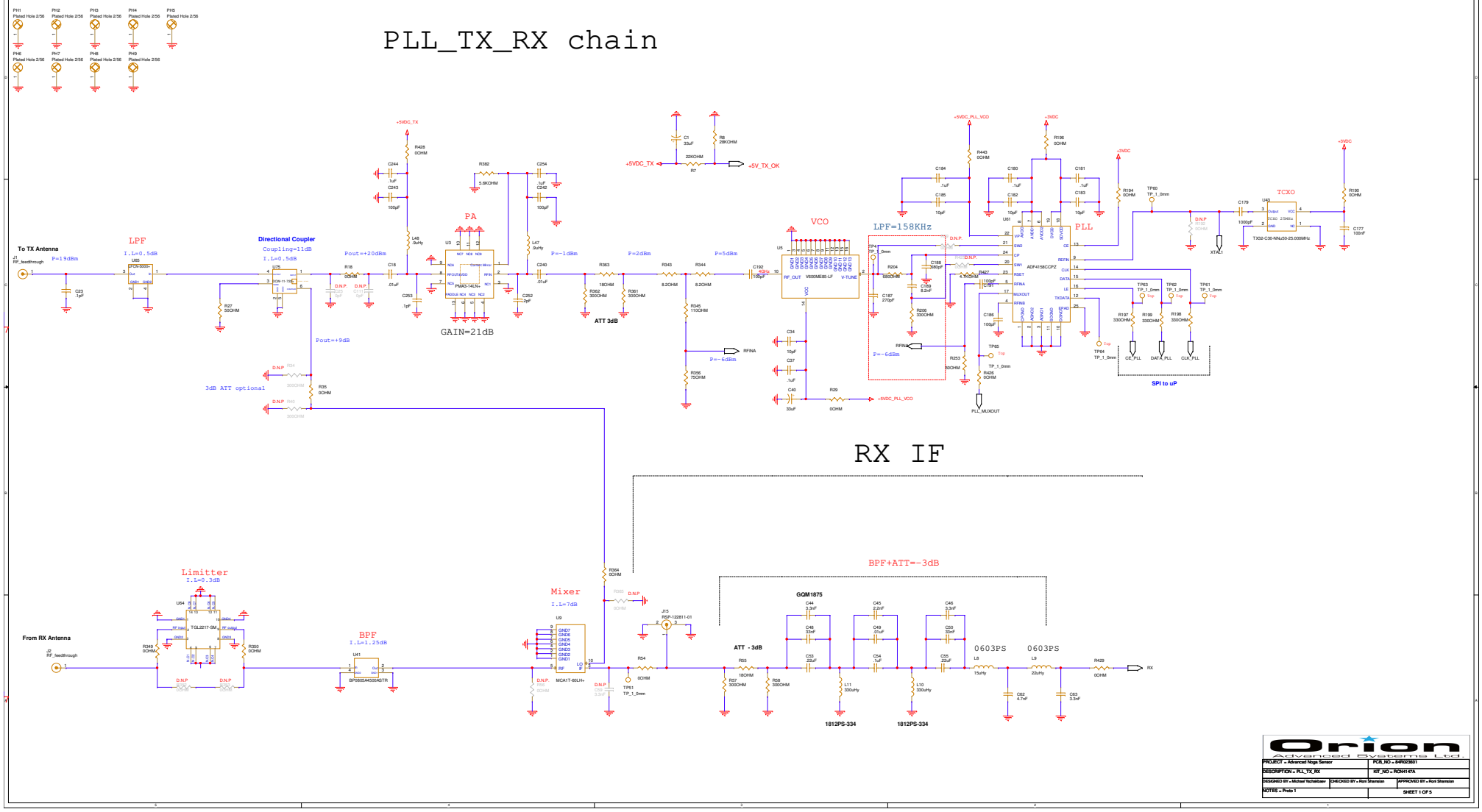

PROJECT = Advanced Noga Sensor		PCB_NO = 84R003601
DESCRIPTION = PLL_TX_RX		KIT_NO = RCN4147A
DESIGNED BY = Michael Yechiliboev	CHECKED BY = Ron Shamelan	APPROVED BY = Ron Shamelan
NOTES = Proto 1		SHEET 1 OF 5

RX IF_continues

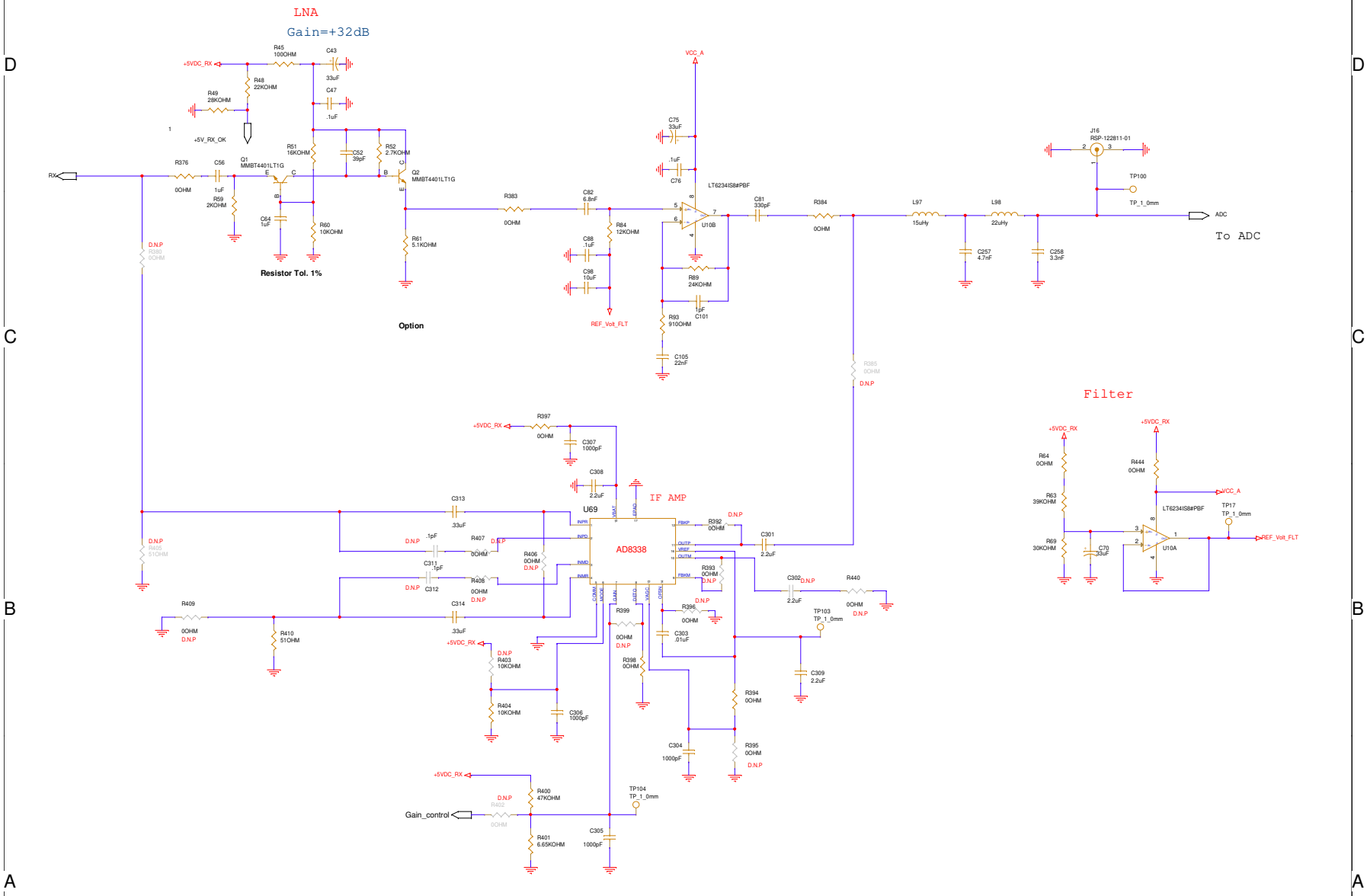

Orion Advanced Systems Ltd.

PROJECT = Advanced Noga Sensor		PCB_NO = 84R023601
DESCRIPTION = RX_IF		KIT_NO = RCM4147A
DESIGNED BY = Michael Yachakbaev	CHECKED BY = Roni Shamsian	APPROVED BY = Roni Shamsian
NOTES = Proto 1		SHEET 2 OF 5

LDOs and SW reg

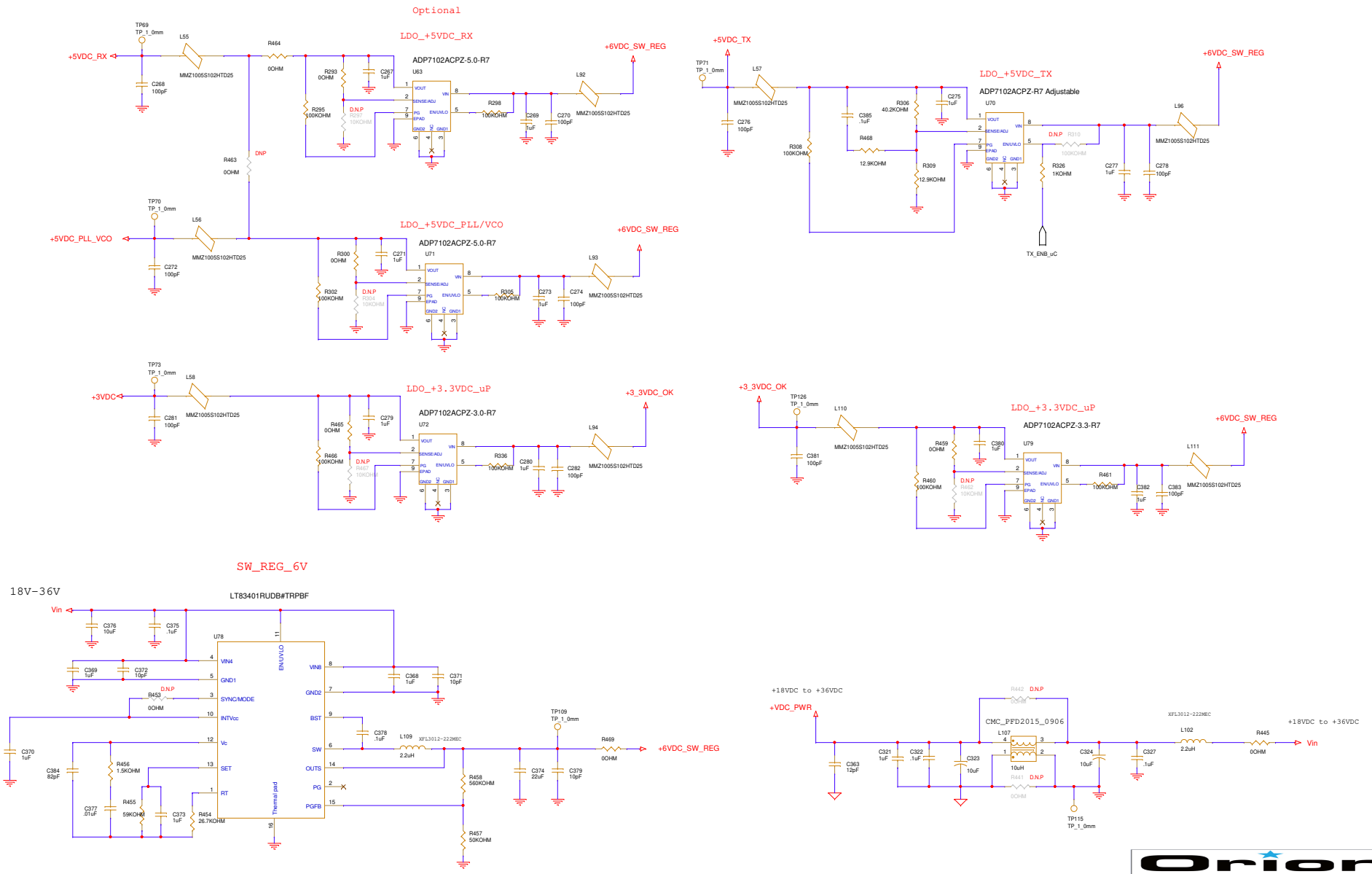

Orion Advanced Systems Ltd.

PROJECT = Advanced Noga Sensor		PCB_NO = 84R023601
DESCRIPTION = LDOs and SW reg		KIT_NO = RCN4147A
DESIGNED BY = Michael Yschakbaev	CHECKED BY = Roni Shamsian	APPROVED BY = Roni Shamsian
NOTES = Proto 1		SHEET 3 OF 5

Microcontroler

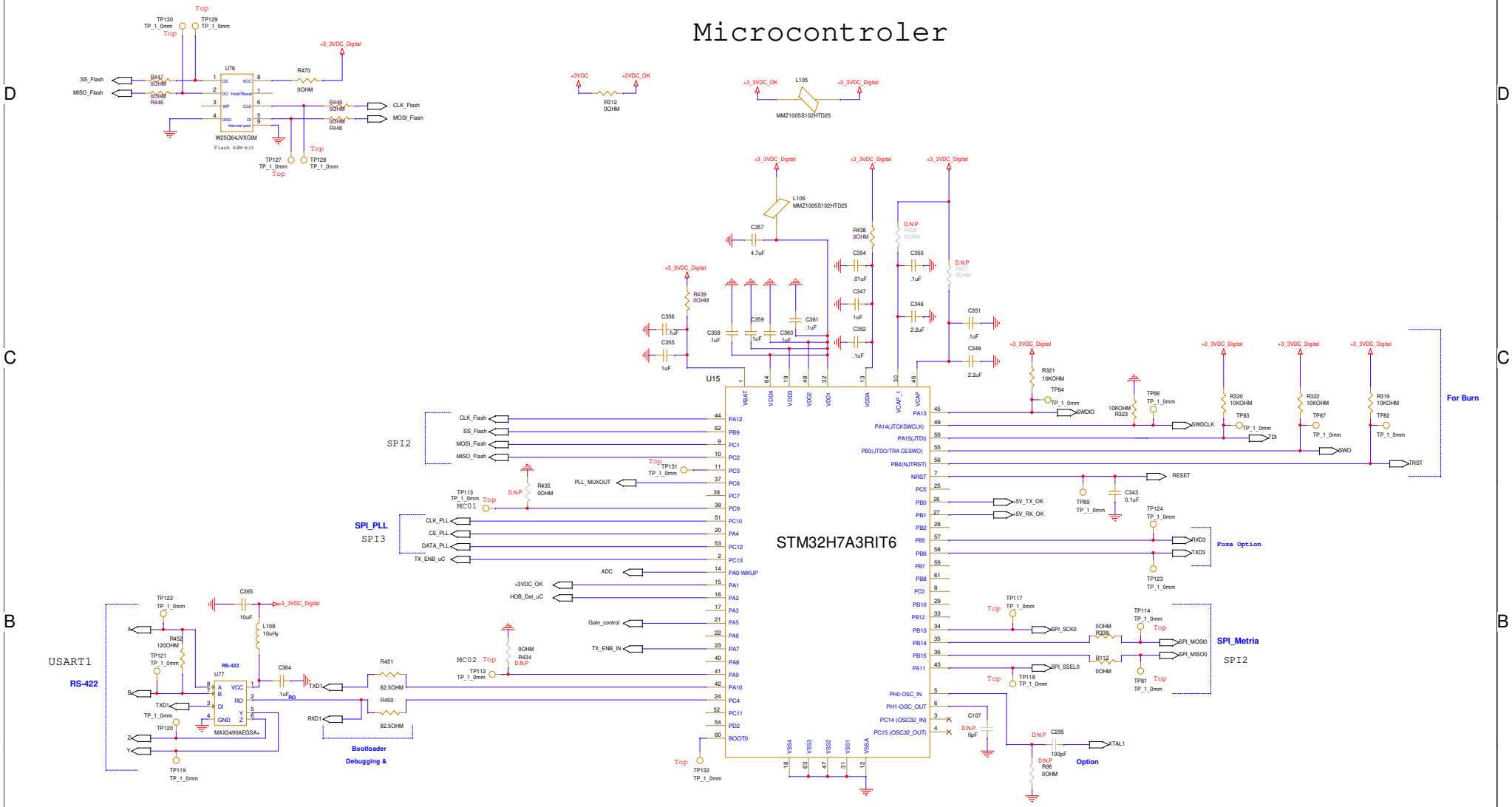

PROJECT = Advanced Noga Sensor		PCB_NO = 84R023601
DESCRIPTION = Microcontroller		KIT_NO = RCN4147A
DESIGNED BY = Michael Yschakbaev	CHECKED BY = Roni Shamsian	APPROVED BY = Roni Shamsian
NOTES = Proto 1		SHEET 4 OF 5

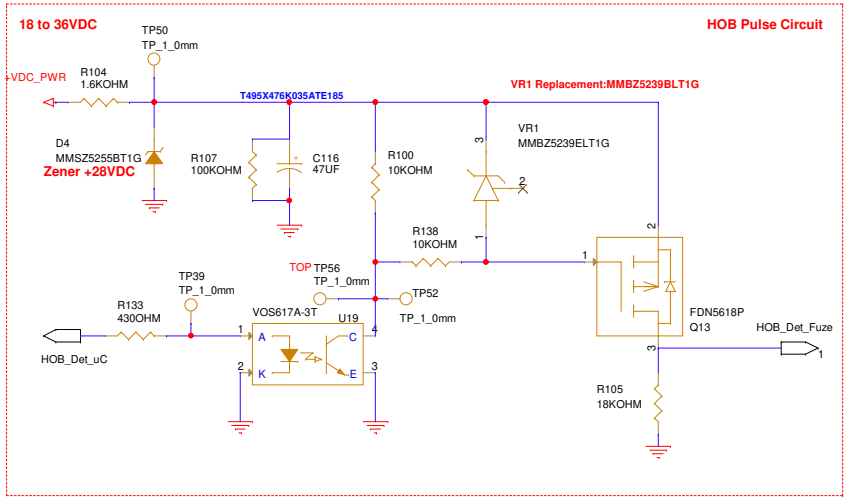

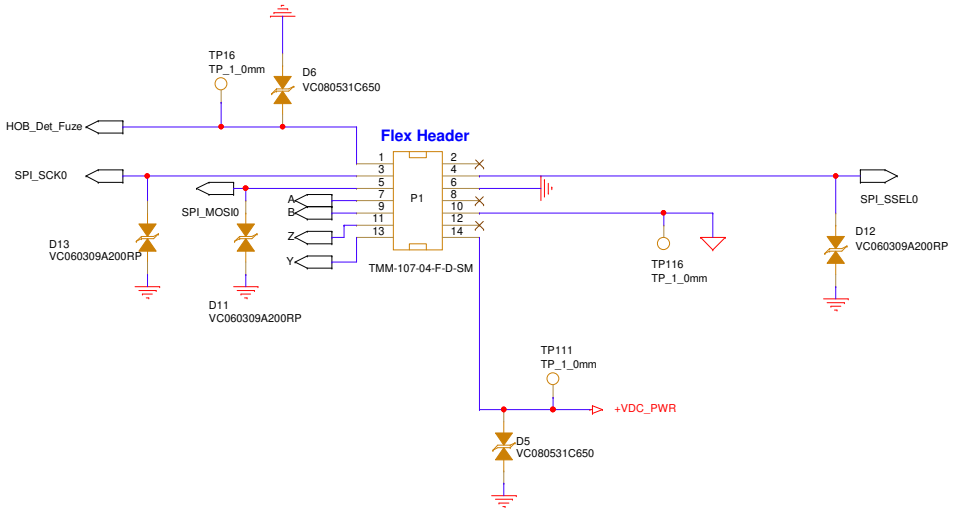

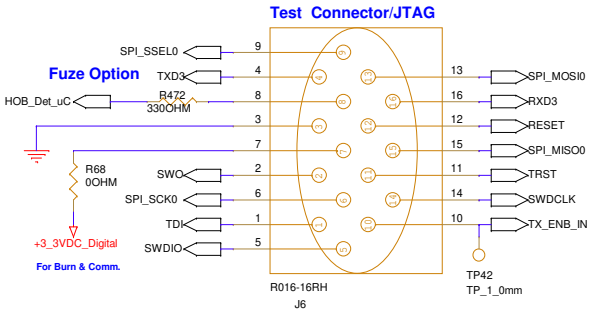

Orion Advanced Systems Ltd.

PROJECT = Advanced Noga Sensor		PCB_NO = 84R023601
DESCRIPTION = LDOs and SW reg		KIT_NO = RCN4147A
DESIGNED BY = Michael Yschakbaev	CHECKED BY = Roni Shamsian	APPROVED BY = Roni Shamsian
NOTES = Proto 1		SHEET 5 OF 5