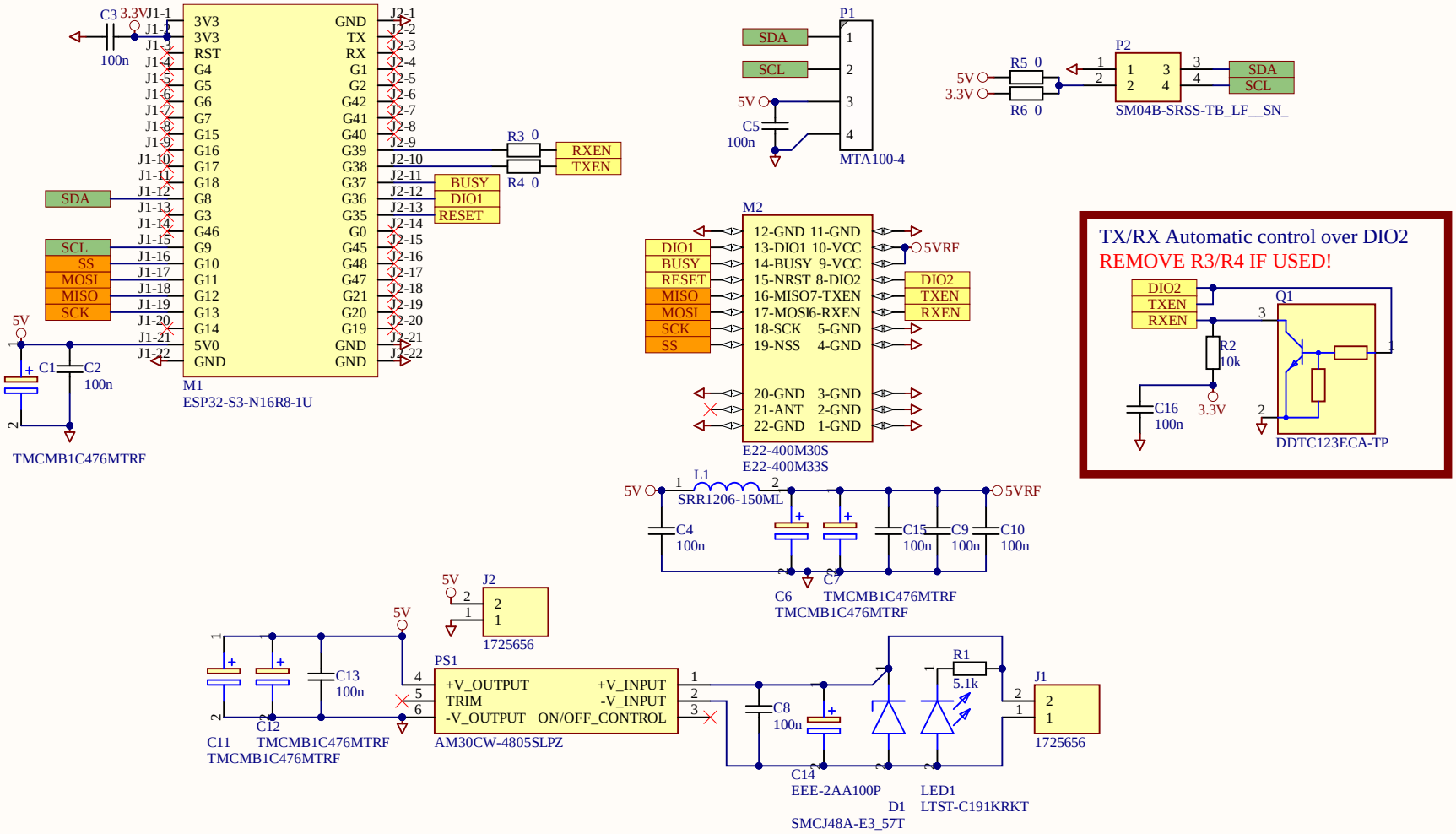

Title Reticulum Repeater/Gateway Node - aethernodeS3 v1.0		
Size A4	Number aethernodeS3_1.0	Revision 1.0
Date: 4.16.2026	Sheet1 of 1	
File: F:\aethernode\..\aethernodeS3.SchDoc	Drawn By:aetherlab	