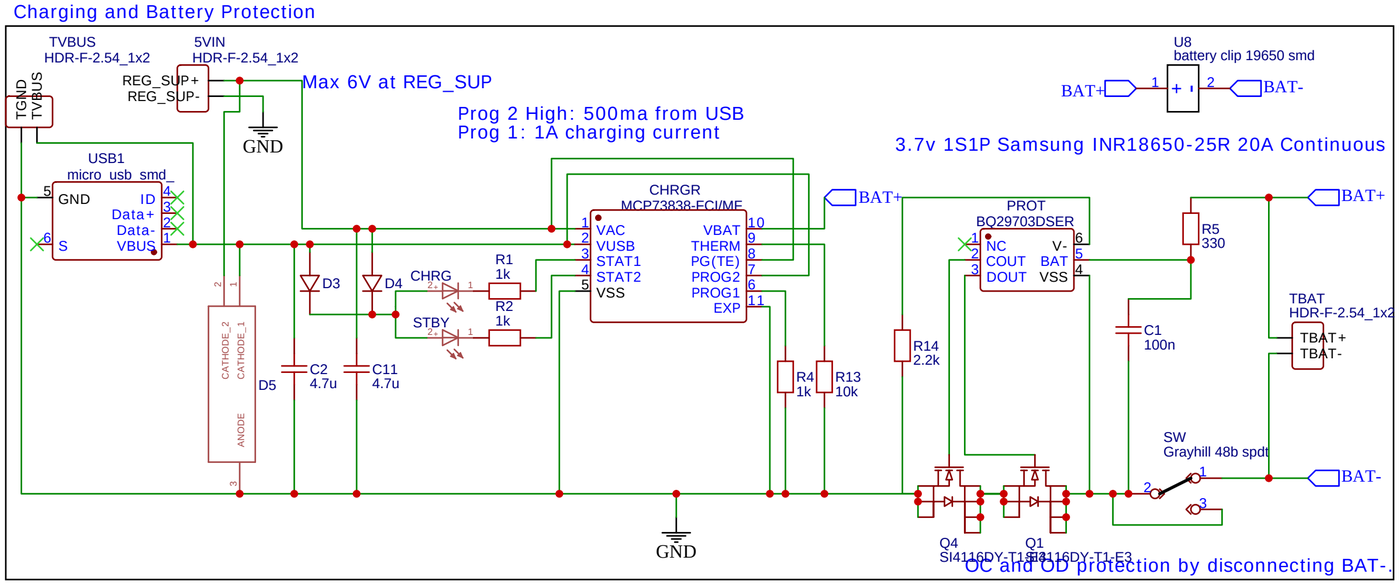

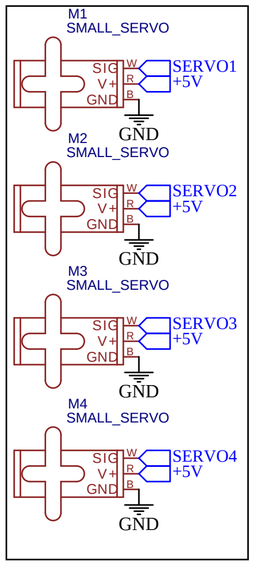

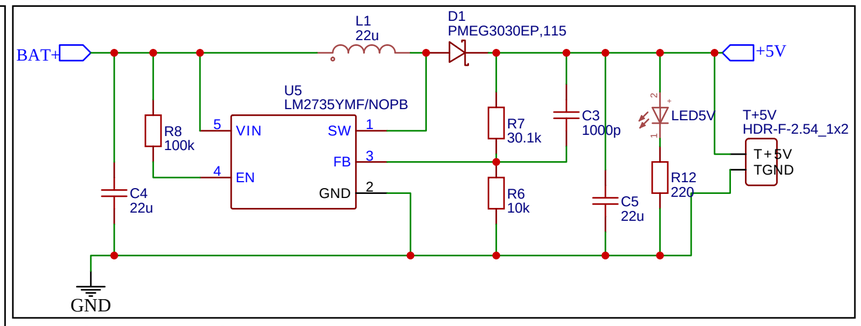

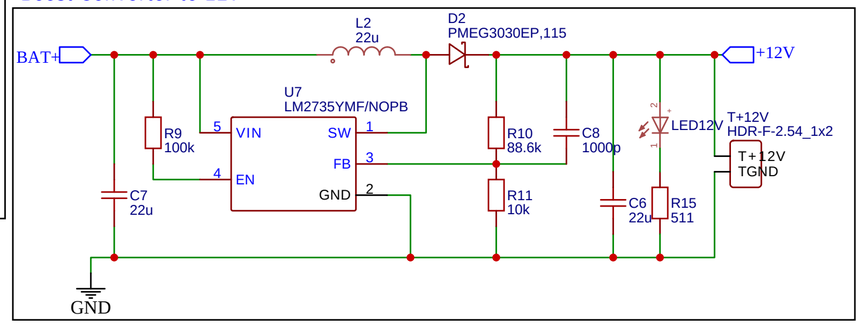

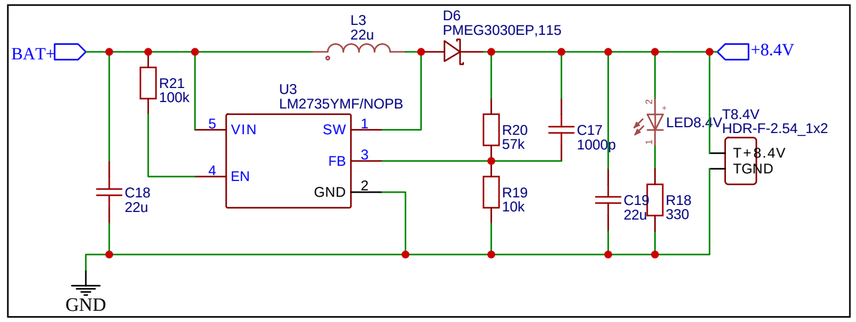

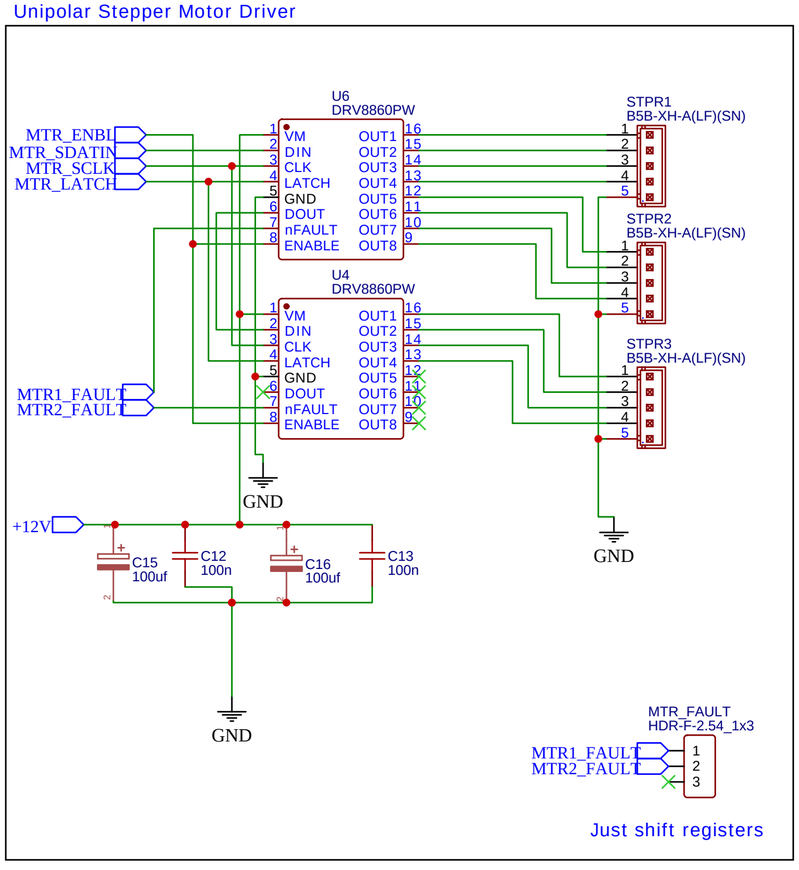

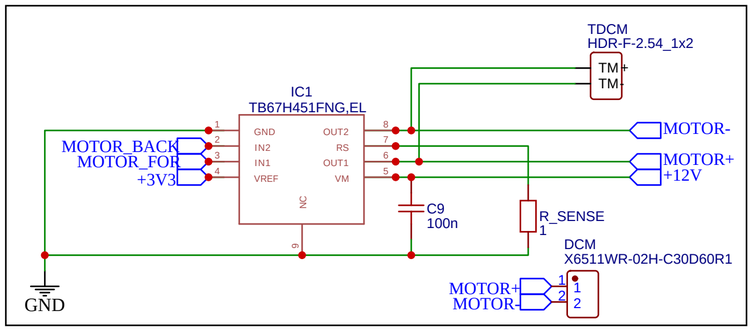

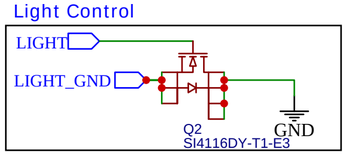

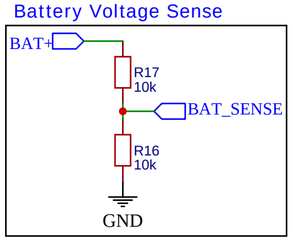

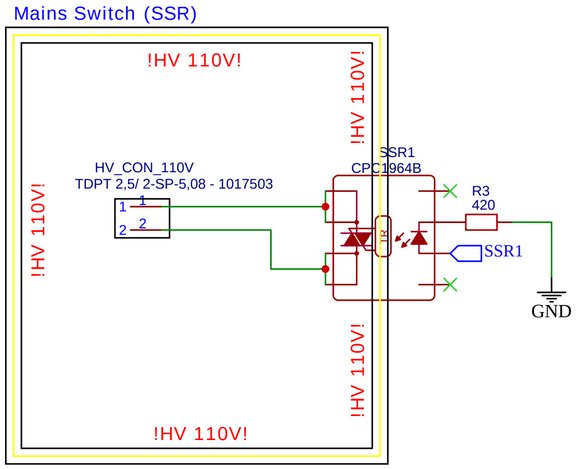

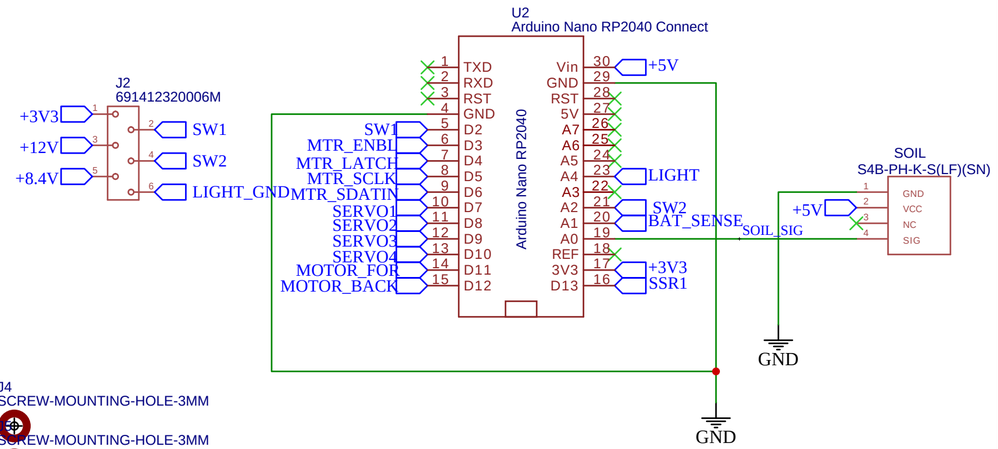

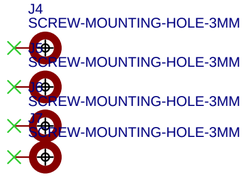

The Green Thumb is a plant care-taking robot. It incorporates various actuators and is battery powered. The only safety-critical circuit is switching mains (120VAC) via a solid-state relay.

Three boost converters create 5V, 8.4V, and 12V rails.

A resistor divider allows battery voltage sensing as the brains is 3v3 logic.

Battery is USB charged and protected against short circuit, over current, and over voltage via disconnecting BAT-.

The battery is a 1S1P 3.7v 2.4Ah 18650 li-ion cell. If it cant handle the load, a 1S2P pack will be jerry-rigged in.

TITLE: Green Thumb Main Schematic	REV: 1.0
Company: UCLA Mechanical Engineering	Sheet: 1/1
Date: 2022-02-17 Drawn By: Jeff Anderson	

EasyEDA