Description

Architect and design software for a bare-metal embedded system used in a temperature monitoring and visualization device, with indicators for OK, Warning, and Critical temperature ranges.

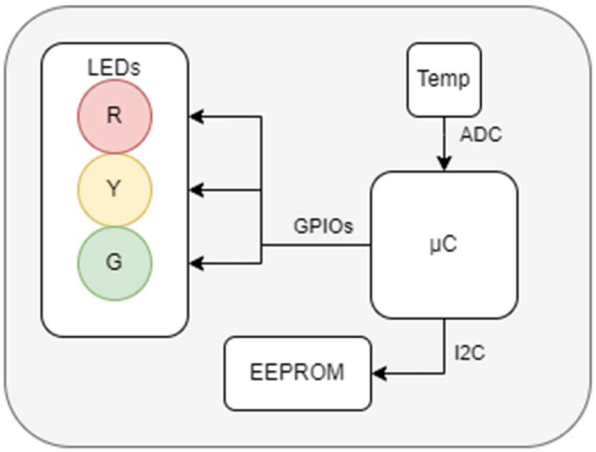

Requirements

- Temperature sensor is connected via ADC.
- Temperature shall be sampled every 100µs, with very low jitter.
- 3 LEDs are connected via GPIOs, which shall visualize temperature conditions.
    - G - Normal operation temperature <85°C
    - Y - Temperature reached warning level >= 85°C
    - R - Temperature is at critical level >= 105°C or < 5°C
- The software shall support two different hardware revisions, each equipped with different temperature sensor types:
    - Rev-A has a resolution of 1 degree Celsius per digit. For example, a value of 10 corresponds to 10 °C.
    - Rev-B has a resolution of 0.1 degrees Celsius per digit. For example, a value of 100 corresponds to 10 °C
    - Only one type of sensor type will be operational at any given time
- EEPROM provides configuration like:
    - Hardware revision (0 – Rev-A, 1 – Rev-B).
    - Hardware serial number (used as placeholder only, for example: “ABC1234”)

Documentation and implementation

- Document your architecture in .pdf, .png or .svg

- Software shall be written in C language.
- For demonstration purposes, the software can be written for a PC with mocked hardware interfaces. No hardware implementation, nor emulation is required.
- If an ISRs are needed, functions shall be defined and implemented; however, there is no need to make the ISR calls functional from PC demonstration program.

- Implement the second version using the C++ programming language while applying Object-Oriented Programming (OOP) paradigms.

Repository

- The project including diagrams shall be uploaded to GitHub as a public repository.
- Link to the GitHub repository shall be provided at latest 24 hours before the interview.