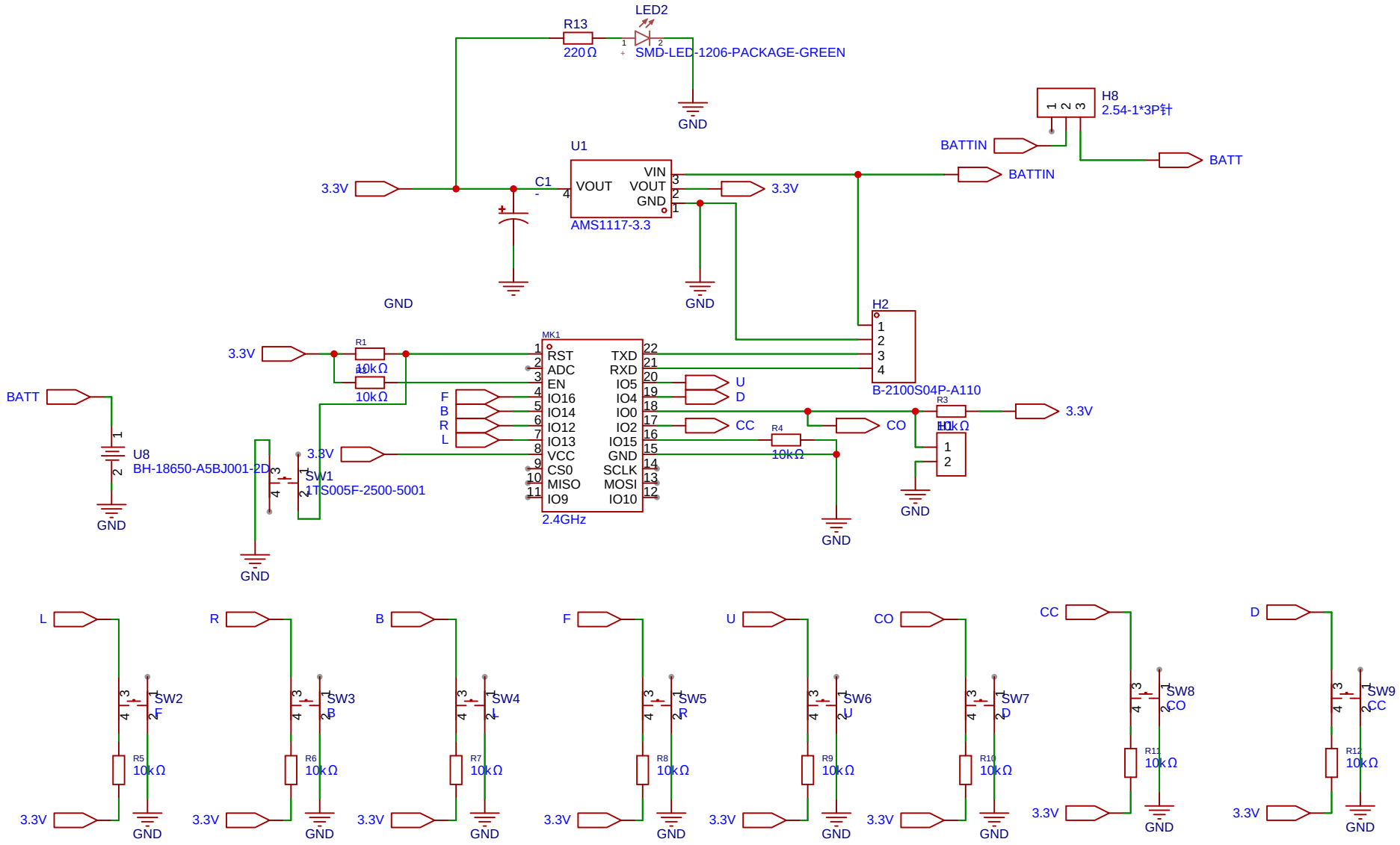

Schematic	Schematic3	Update Date	2024-09-21
		Create Date	2024-09-21
Page	P1.Schematic3	Part Number	JLCPCB-002
Drawn	EasyEDA	esp12 boards	
Reviewed	EasyEDA		
		VER	SIZE	PAGE 1 OF 1
EasyEDA		V0.1	A4	EasyEDA.com