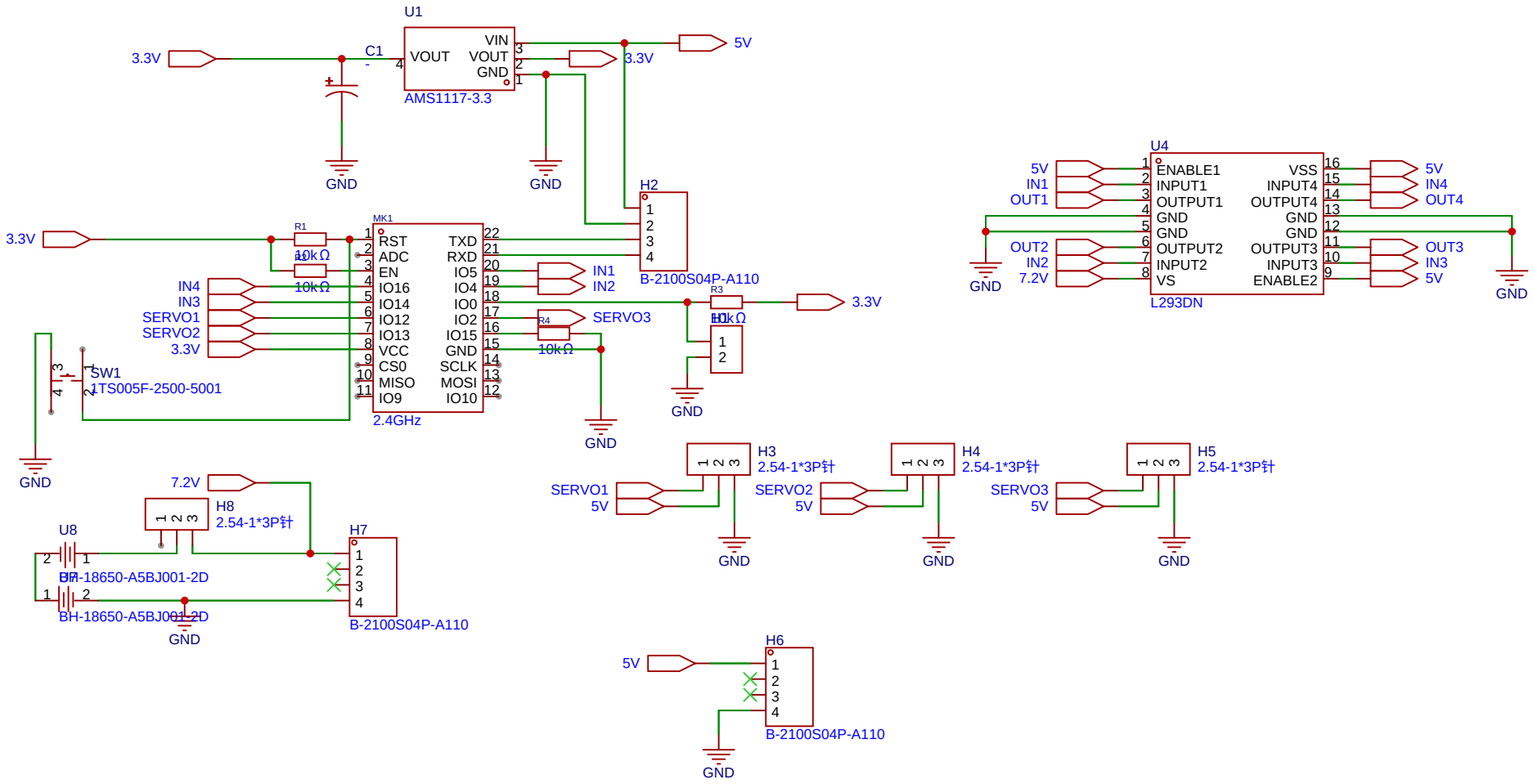

Schematic	Schematic2	Update Date	2024-09-16
		Create Date	2024-09-15
Page	rc car	Part Number	JLCPCB-002
Drawn	EasyEDA	esp12 boards	
Reviewed	EasyEDA		
		VER	SIZE	PAGE 1 OF 1
EasyEDA		V0.1	A4	EasyEDA.com