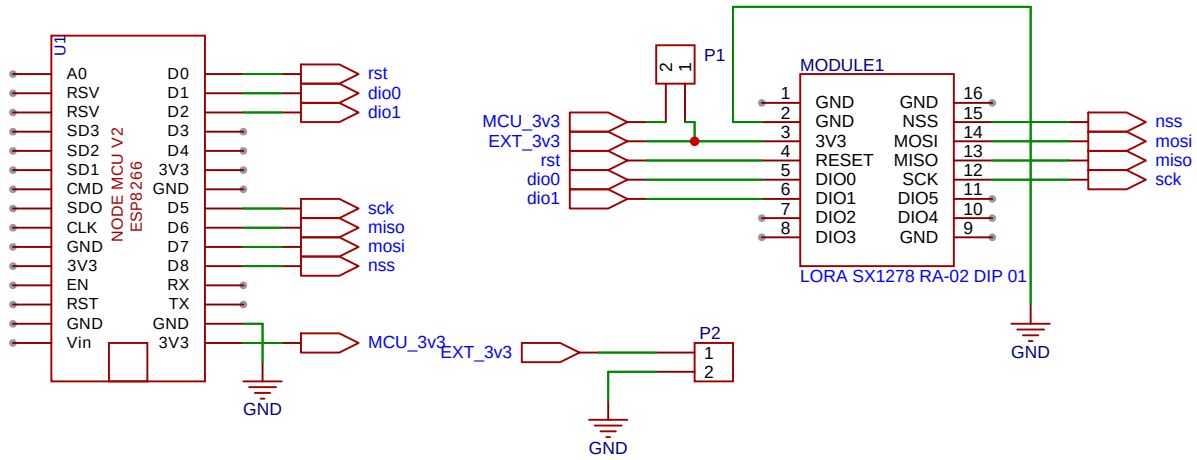

Schematic	nodemcu	Update Date	2024-08-28
		Create Date	2024-08-28
Page	nodemcu	Part Number	JLCPCB-002
Drawn	EasyEDA	LORA BOARD	
Reviewed	EasyEDA		
		VER	SIZE	PAGE 1 OF 1
EasyEDA		V0.1	A4	EasyEDA.com