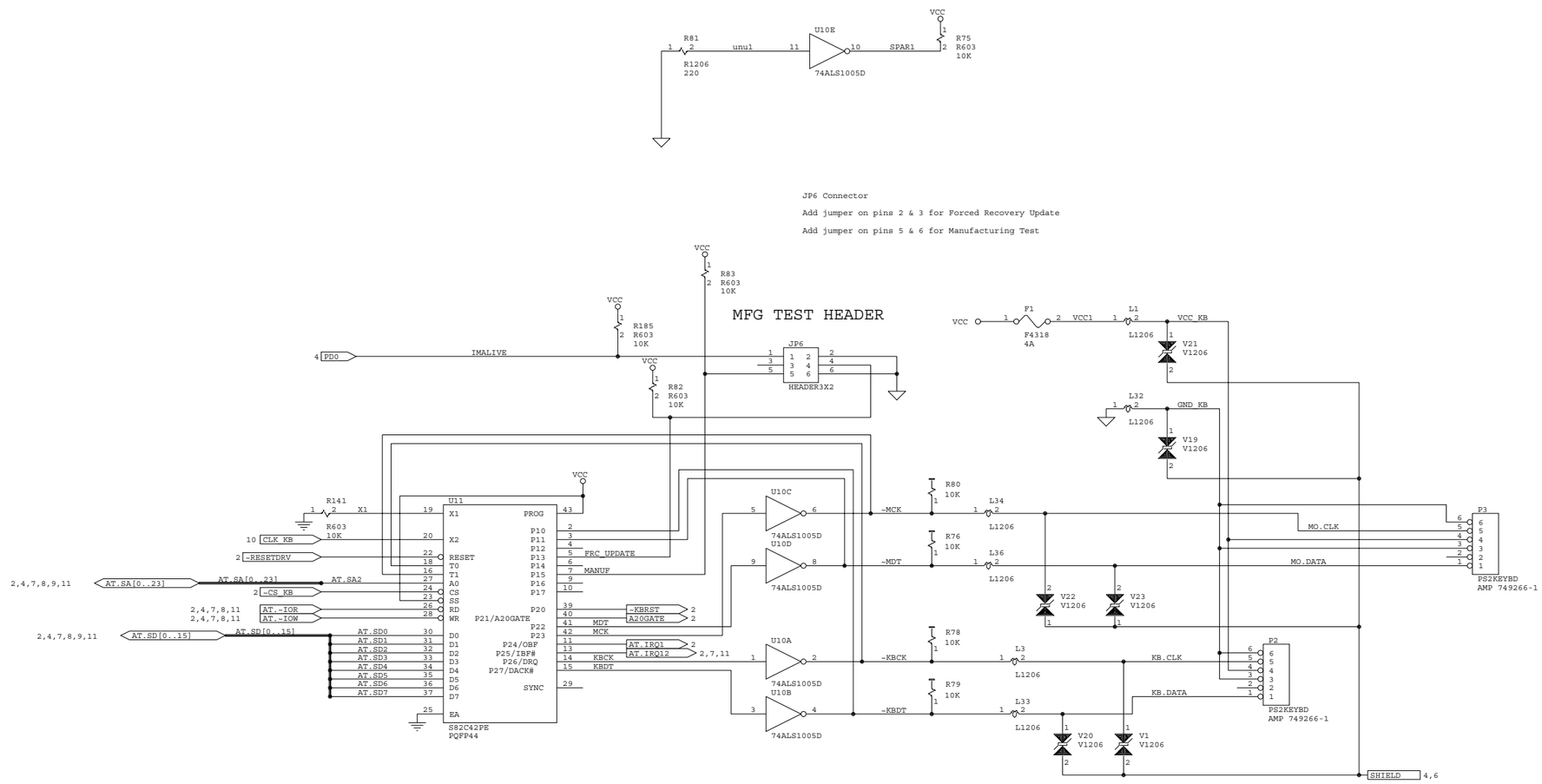

U16 Power Supply = +5 Volts
U17 Power Supply = +5 Volts
VCC Plane is + 5 Volts

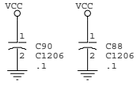

Although Radisys has verified this design to be functional.
Neither Radisys or Intel assume any responsibility for any errors
which may appear in the design. Both Radisys and Intel reserves
the right to modify this design without notice.

RadiSys Corp.		
Title: Humming Bird Keyboard/Mouse		
Size: C	Document Number: 01-0193-02	REV: 1
Date: September 28, 1995	Sheet 5 of 11	