Volume: Intermediate Electronics & Prototyping

Section: 2.1: Power Supplies and Voltage Regulation

Introduction to Power Supplies and Voltage Regulation

In the world of electronics, almost every circuit and device requires a stable and consistent power source to function correctly. While the electricity supplied to our homes is typically Alternating Current (AC), most electronic components operate on Direct Current (DC). This fundamental difference necessitates the process of **AC/DC conversion** and **voltage regulation**.

This module will delve into the essential components and principles behind converting AC to DC and maintaining a stable output voltage, crucial for the reliable operation of electronic devices. We will cover transformers, rectifiers, filter capacitors, and linear regulators, specifically focusing on the widely used 78xx series.

2.1.1: AC/DC Conversion

AC/DC conversion is the process of transforming alternating current (AC) into direct current (DC). AC is characterized by its periodic reversal of direction, while DC flows consistently in a single direction. The conversion process typically involves several stages:

1. **Step-Down Transformation (if needed):** Reducing the high AC voltage from the mains to a lower, more manageable AC voltage.
2. **Rectification:** Converting the alternating current into a pulsating direct current.
3. **Filtering:** Smoothing out the pulsations in the DC output to create a more stable DC voltage.
4. **Voltage Regulation:** Maintaining a constant DC output voltage despite variations in input voltage or load conditions.

2.1.2: Transformers

Transformers are passive electrical devices that transfer electrical energy from one electrical circuit to another, or multiple circuits. A varying current in any one coil of the transformer produces a varying magnetic flux in the transformer's core, which induces a varying electromotive force across any other coils wound around the same core. This allows for the **stepping up** or **stepping down** of AC voltages.

For AC/DC conversion, a **step-down transformer** is commonly used to reduce the high AC voltage from the wall outlet to a lower AC voltage suitable for the electronic circuit. This is a critical first step as most electronic components cannot handle the high voltages directly from the mains.

2.1.3: Rectifiers

Rectifiers are electronic circuits that convert alternating current (AC) into pulsating direct current (DC). This is achieved by using diodes, which are semiconductor devices that allow current to flow predominantly in one direction. There are two primary types of rectifiers:

- **Half-wave Rectifier:** This type of rectifier allows only one half-cycle of the AC waveform to pass through, blocking the other half. The output is a pulsating DC, but it is less efficient and produces a significant amount of ripple.

  The output voltage of an ideal half-wave rectifier can be approximated as:

  $$V_{DC} \approx \frac{V_{peak}}{\pi}$$

  where V_{peak} is the peak voltage of the AC input.

- **Full-wave Rectifier:** This type of rectifier converts both half-cycles of the AC waveform into pulsating DC, resulting in a smoother output with less ripple compared to a half-wave rectifier. Full-wave rectifiers are more efficient and are commonly implemented using a **center-tapped transformer** with two diodes or a **diode bridge rectifier** with four diodes.

  The output voltage of an ideal full-wave rectifier can be approximated as:

  $$V_{DC} \approx \frac{2V_{peak}}{\pi}$$

where V_{peak} is the peak voltage of the AC input.

Rectifier Type	Diodes Required	Efficiency	Ripple Factor
Half-wave	1	Low	High
Full-wave	2 (center-tap) or 4 (bridge)	High	Low

2.1.4: Filter Capacitors

After rectification, the DC output is still pulsating, meaning it contains significant variations in voltage, known as **ripple**. To smooth out these pulsations and produce a more stable DC voltage, **filter capacitors** are used. A large electrolytic capacitor is typically connected in parallel with the rectifier's output.

The capacitor charges during the peaks of the pulsating DC and discharges slowly through the load during the valleys, effectively filling in the gaps and reducing the ripple. The effectiveness of the filtering depends on the capacitance value and the load current. A larger capacitance generally results in less ripple.

2.1.5: Linear Regulators (78xx Series)

Even after filtering, some residual ripple may remain, and the DC voltage might still fluctuate with changes in the input voltage or the load. To provide a highly stable and constant DC output voltage, **voltage regulators** are employed. **Linear regulators** are a common type of voltage regulator, known for their simplicity and low noise output.

The **78xx series** of linear voltage regulators are fixed positive voltage regulators, where 'xx' denotes the output voltage (e.g., 7805 for +5V, 7812 for +12V). These are three-terminal devices that are very easy to use and require minimal external components (typically two capacitors for stability).

Key Features of 78xx Series Regulators:

- **Fixed Output Voltage:** Provides a stable, predetermined output voltage.
- **Internal Current Limiting:** Protects the regulator from excessive output current.
- **Thermal Shutdown:** Shuts down the regulator if its internal temperature exceeds a safe limit.

- **Short-Circuit Protection:** Prevents damage in case of a short circuit at the output.

Basic Circuit for a 78xx Regulator:

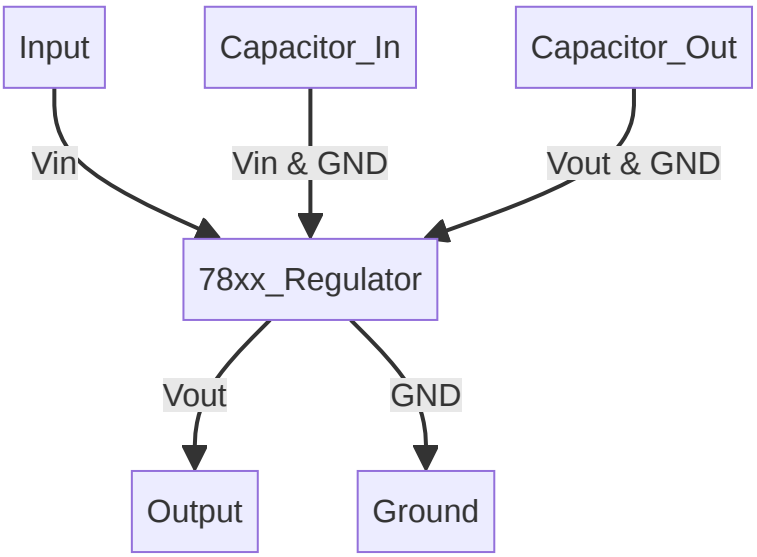

- **Input Capacitor (Cin):** Typically a 0.33µF capacitor, placed between the input pin and ground, helps to filter out noise and transient spikes on the input voltage.
- **Output Capacitor (Cout):** Typically a 0.1µF capacitor, placed between the output pin and ground, improves the transient response and stability of the regulator.

Practice Problems

1. **Problem:** A step-down transformer reduces the mains AC voltage (240V RMS) to 12V RMS. If this 12V RMS AC is fed into a full-wave bridge rectifier, what is the approximate DC output voltage before filtering?

   Solution: First, calculate the peak voltage (V_{peak}) from the RMS voltage (V_{RMS}): $ $V_{peak} = V_{RMS} \times \sqrt{2} = 12V \times 1.414 \approx 16.97V Forafull - waverectifier, theapproximateDCoutputvoltageis :V_{DC} \approx \frac{2V_{peak}}{\pi} = \frac{2 \times 16.97V}{3.14159} \approx 10.8V$ $

2. **Problem:** You need a stable 5V DC supply for a circuit. You have a rectified and filtered DC input that fluctuates between 8V and 10V. Which 78xx series regulator would you choose, and what are its key protection features?

Solution: You would choose a **7805** linear voltage regulator, as it provides a fixed +5V output. Its key protection features include internal current limiting, thermal shutdown, and short-circuit protection.

Conclusion

Understanding AC/DC conversion and voltage regulation is fundamental to designing and working with electronic circuits. From the initial step-down by transformers to the rectification by diodes, smoothing by capacitors, and finally, stabilization by linear regulators like the 78xx series, each stage plays a crucial role in delivering clean, stable DC power essential for modern electronics.

References

- [1] Anker. (n.d.). *AC to DC Converter Guide: Calculation and Conversion Steps*. Retrieved from https://www.anker.com/blogs/ac-power/the-world-of-ac-to-dc-converter-an-in-depth-analysis
- [2] Electronics Tutorials. (n.d.). *AC-DC Converters including Buck, Boost and Flyback*. Retrieved from https://www.electronics-tutorials.ws/connectivity/ac-dc-converters.html
- [3] Monolithic Power Systems. (n.d.). *Introduction to AC/DC Converters*. Retrieved from https://www.monolithicpower.com/en/learning/mpscholar/power-electronics/ac-dc-converters/introduction-to-ac-dc-converters
- [4] Wikipedia. (n.d.). *78xx*. Retrieved from https://en.wikipedia.org/wiki/78xx