AG Co DESIGN
EST 2005

UAE - Dubai - Business Bay - The Binary Tower

OFFICE NO : 1604

OUR MISSION ?

Наша миссия

To be viewed as a respected architectural firm, providing high quality design and services to our clients with honesty and integrity

Быть уважаемой архитектурной фирмой, обеспечивающей высокое качество дизайн и услуги для наших клиентов с честностью и добросовестностью

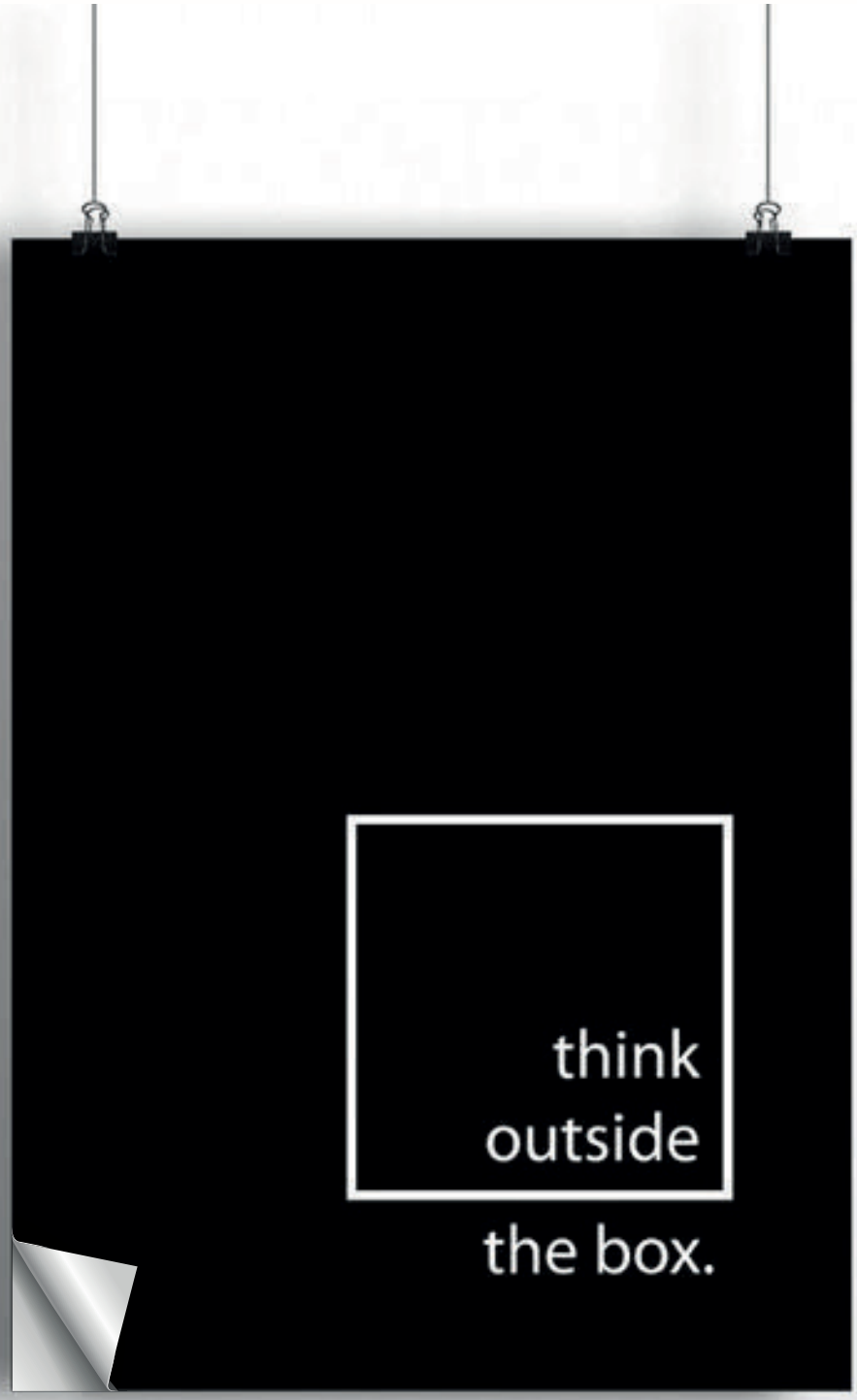

So You Make Difference

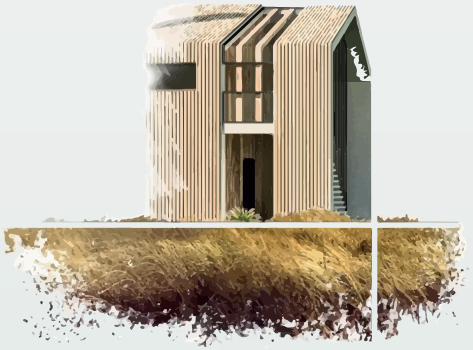

We make what can't be made.

INDEX

Intro	مدخل
Bosnian village	القرية البوسنية
Al Banosh	البانوش
Blenz cafe	بلينز كافيه
Chineese Restaurant	المطعم الصيني
Dandana cafe	مطعم دندنة
Doner & Gyros	دونر و جيروس
Doner Kebab	دونر و كباب
Dr. K clinic	عيادة دكتور كاي
Jabal Ali Mall	مول جبل علي
Jihome cafe	جيهوم كافيه
Made With Love	صنع ب حب
Al Majles	المجلس
Kuwait Homet	منزل الكويت
Kitchens	المطابخ
Baths	الحمامات
The Factory	المصنع
Doors	الأبواب

FIRST BRANCH

Alwarqa'a Dubai Q1 Mall

BOSNIAN VILLAGE

REAL SHOT
First Branch

Bosnian village

Etihad Mall Muhaisanah1 Dubai

SECOND BRANCH

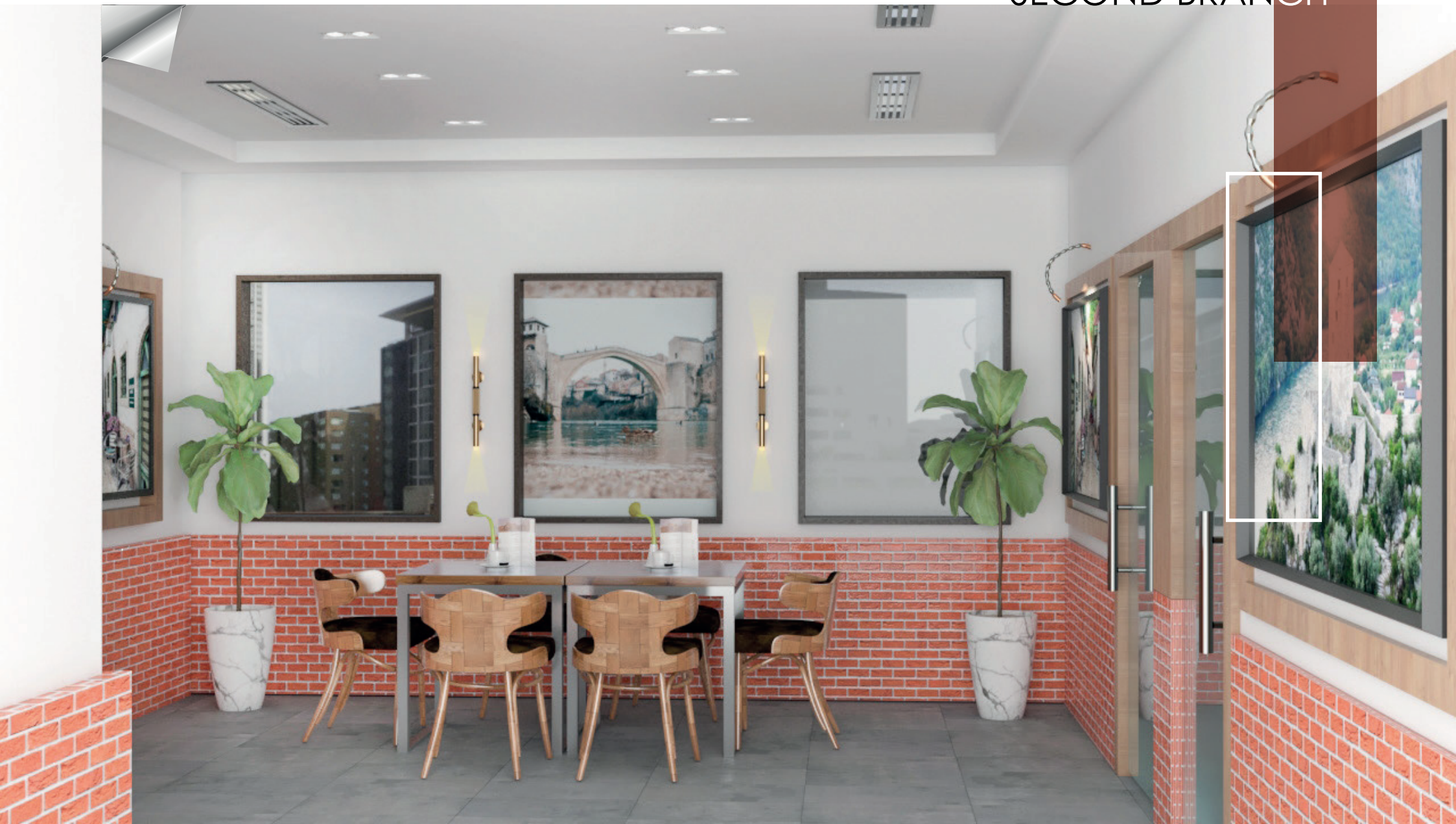

BOSNIAN VILLAGE

SECOND BRANCH

Etihad Mall Muhaisanah1 Dubai

FACADE SHOT
Second Branch

SECOND BRANCH

Facade Shot

BOSNIAN VILLAGE

Etihad Mall Muhaisanah1 Dubai

STEEL STRUCTURE

Project Name: Etihad Bosnian Village

- Approximated 80m2 steel restaurant with fixed cat ladder.
- Address: Al Muhaisnah First - 309 Al Khawaneej St - Dubai
- Scope of work: Steel Design, Shop drawing, Fabrication and installation, foundations (design and execution)
- Main components: Hot-rolled sections, deck slab, Chequered Plates, sandwich panel.
- overall tonnage: 11 ton
- Situation: under process

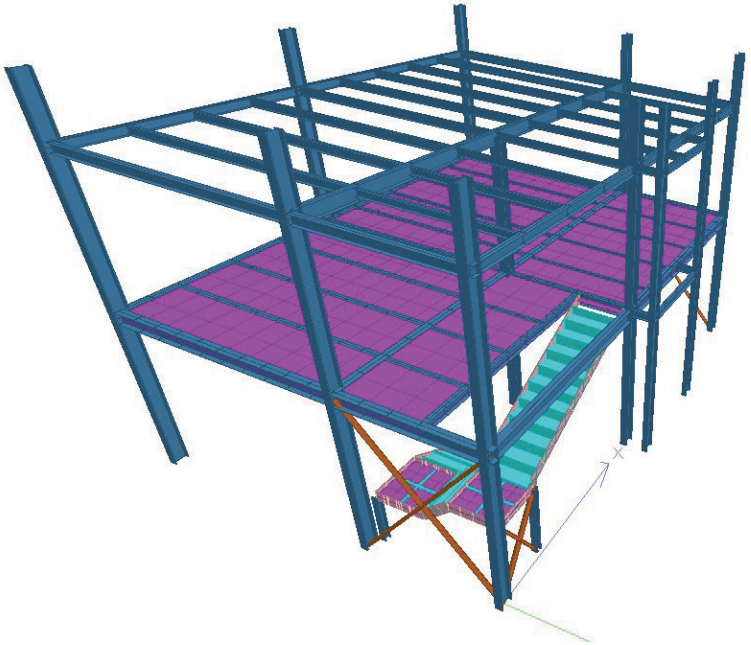

Analytical model

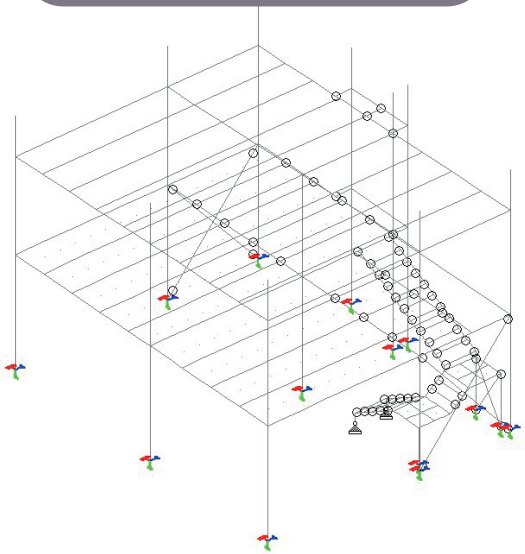

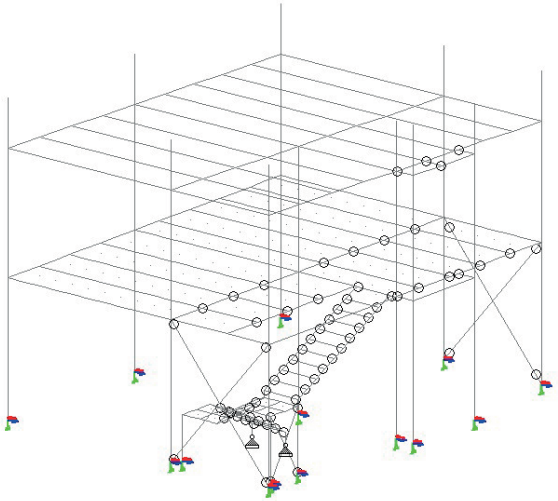

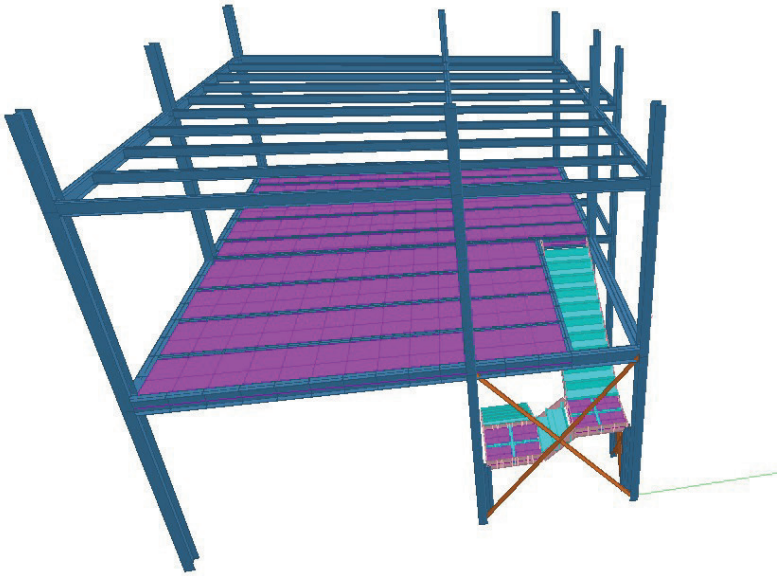

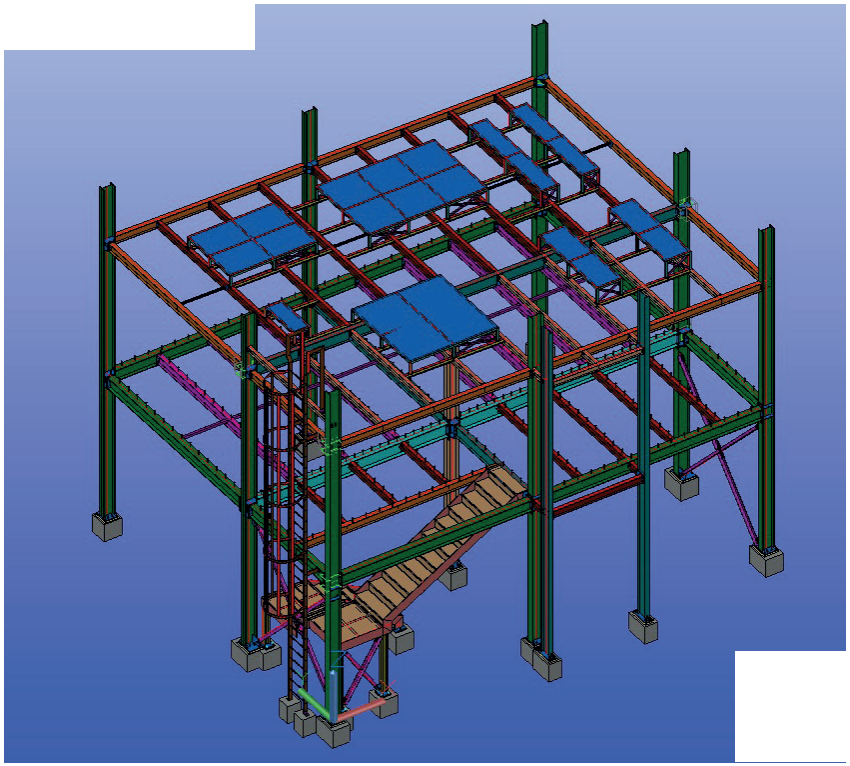

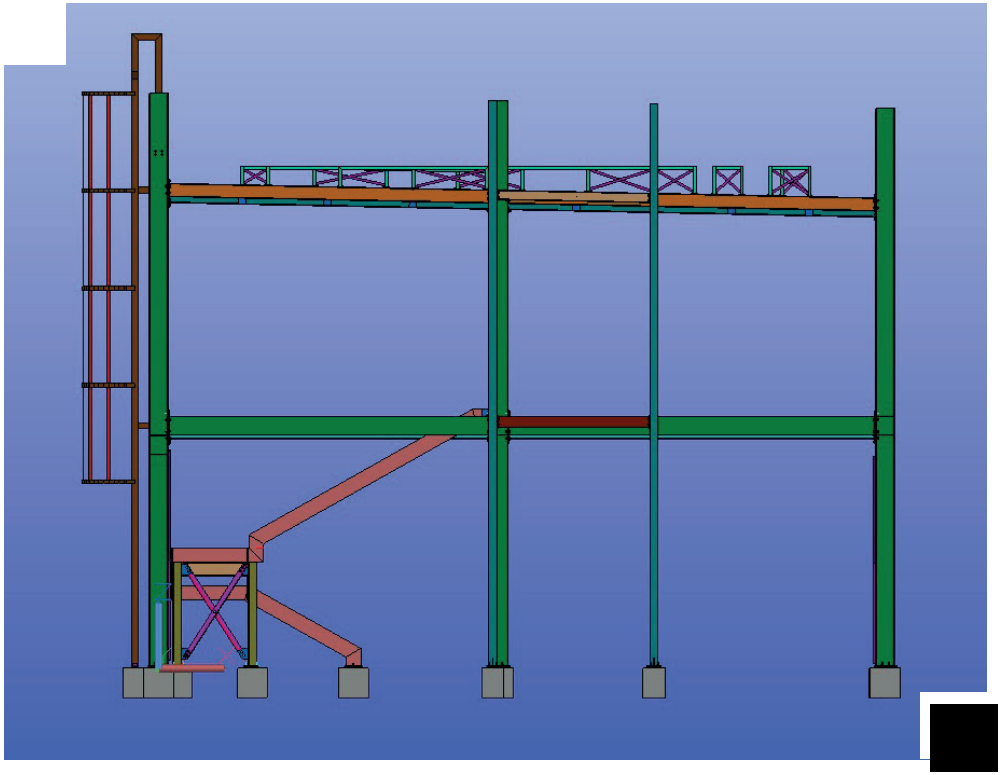

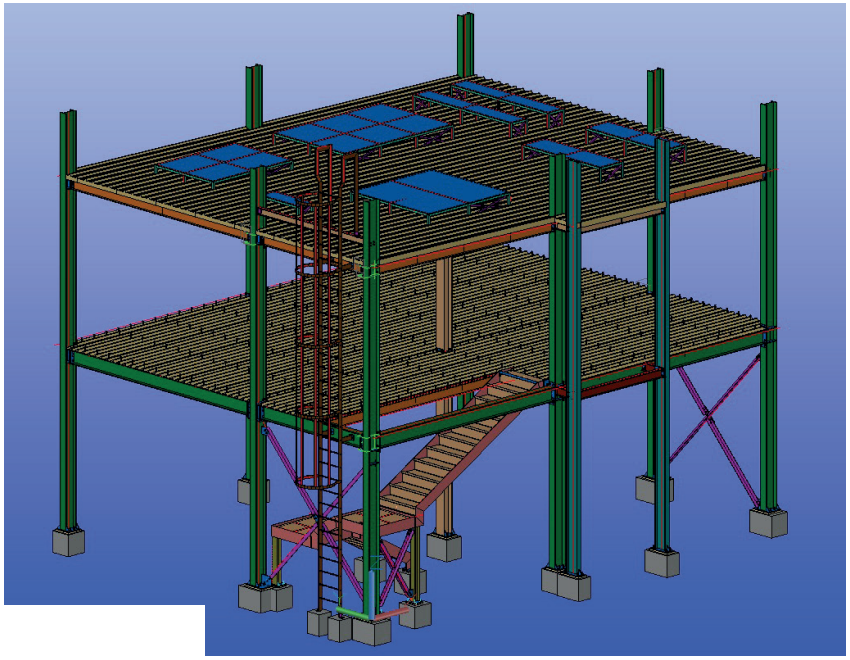

3D Models

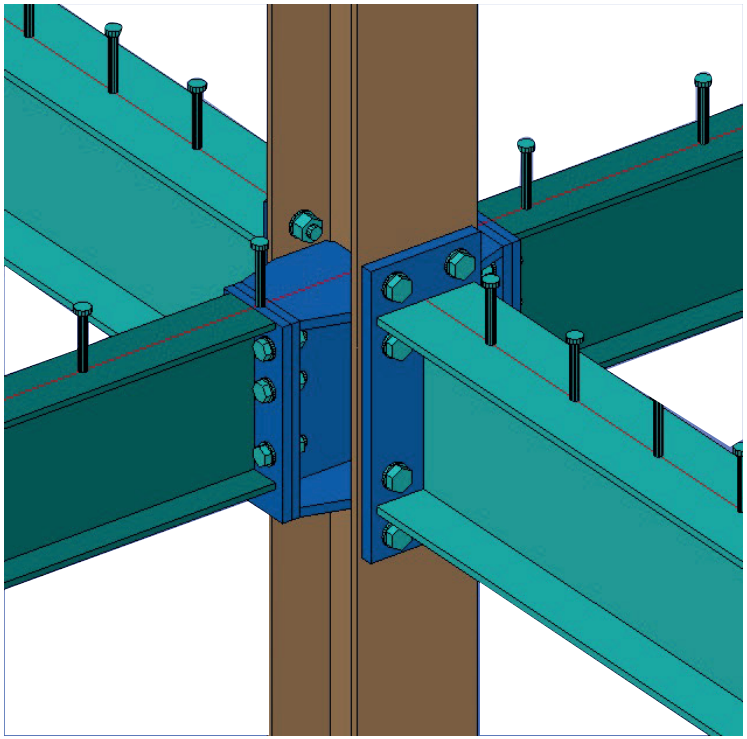

1

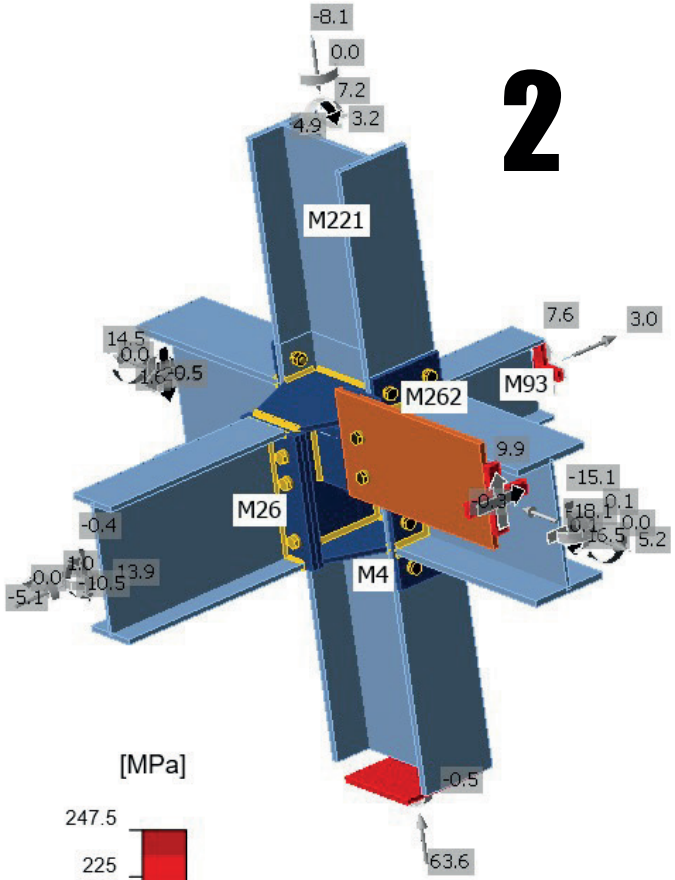

2

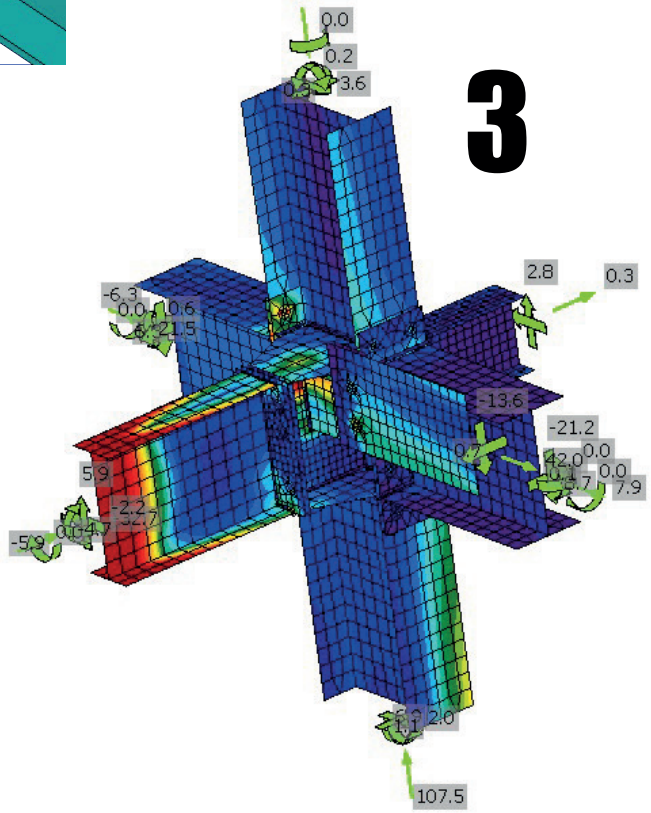

3

Connection Design

STEEL STRUCTURE

DETAILING

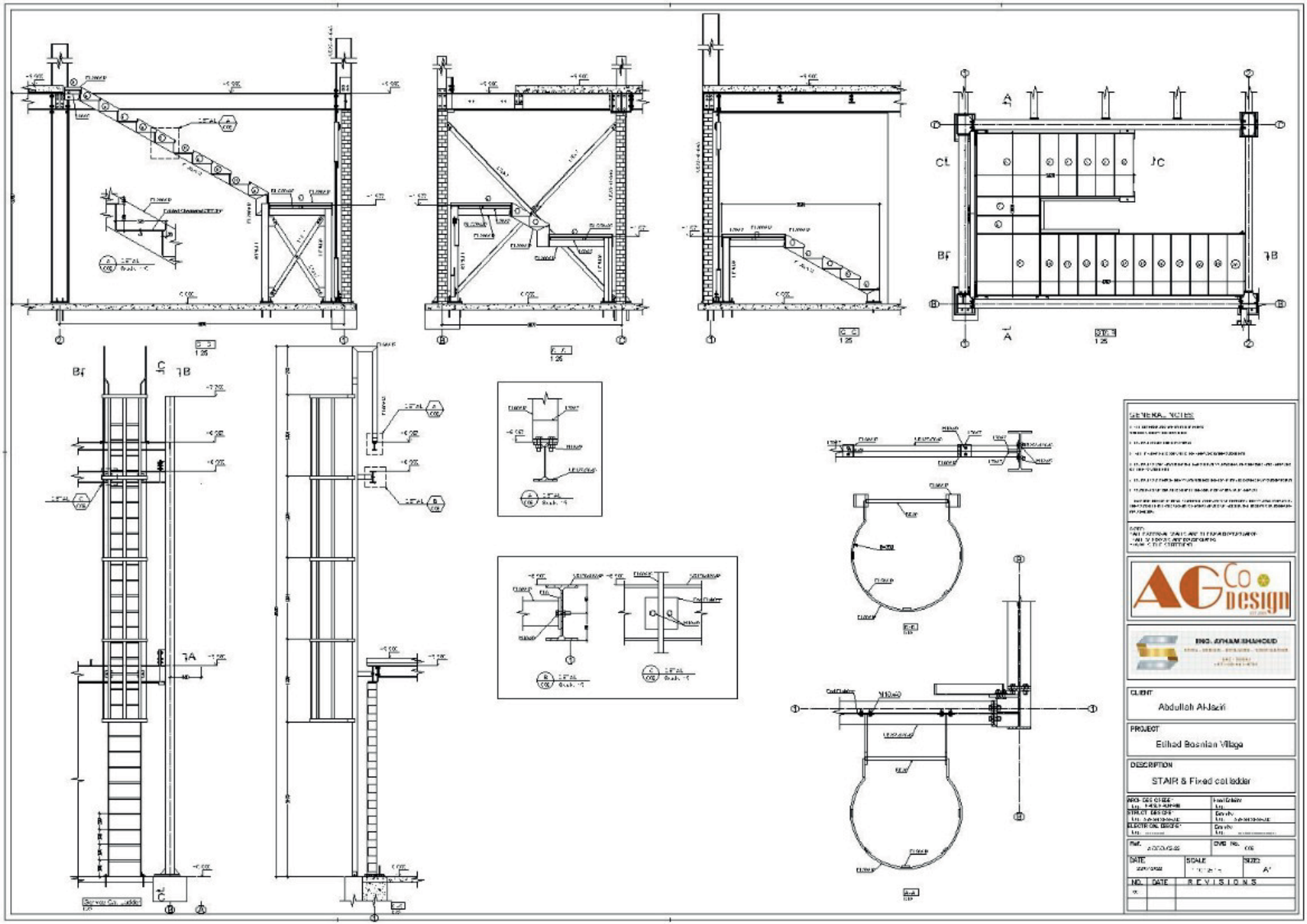

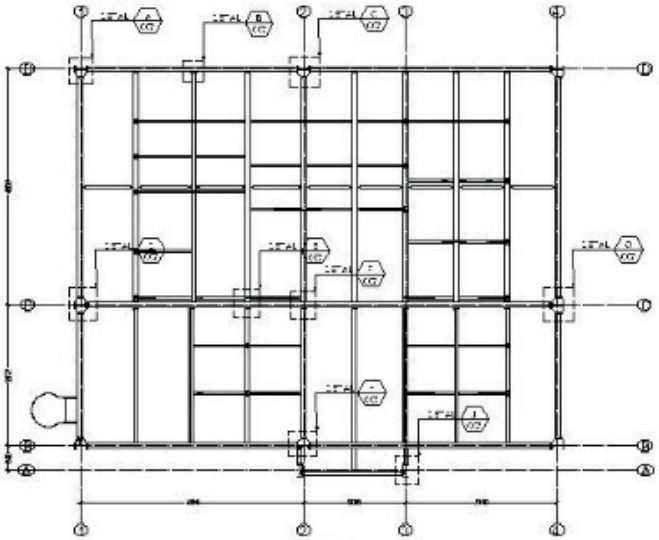

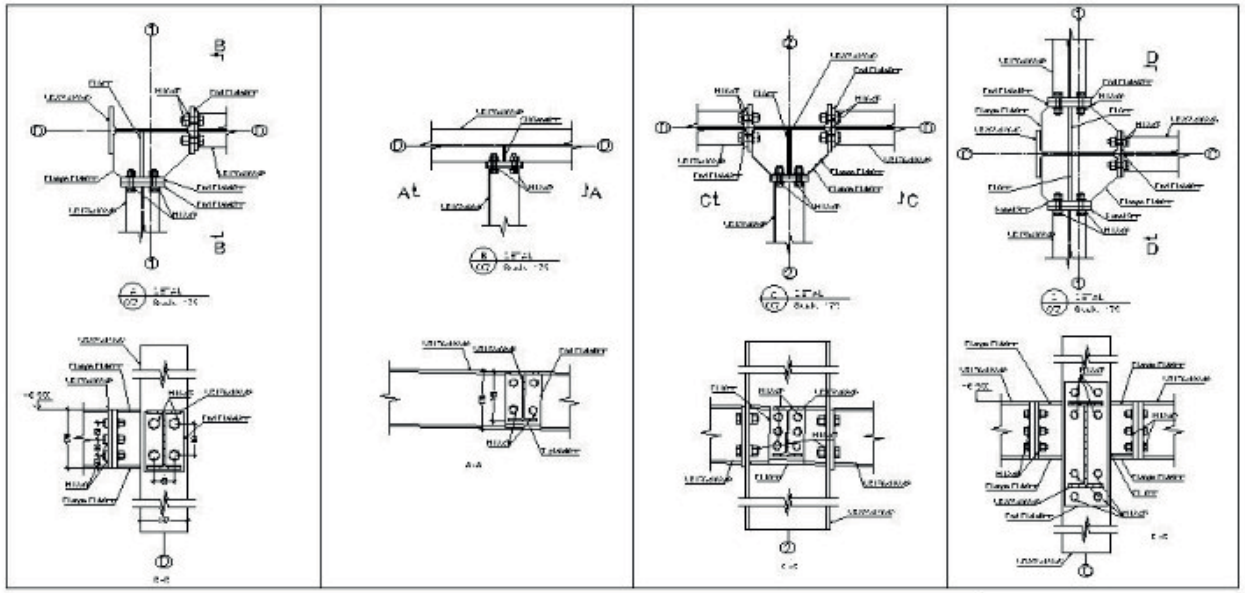

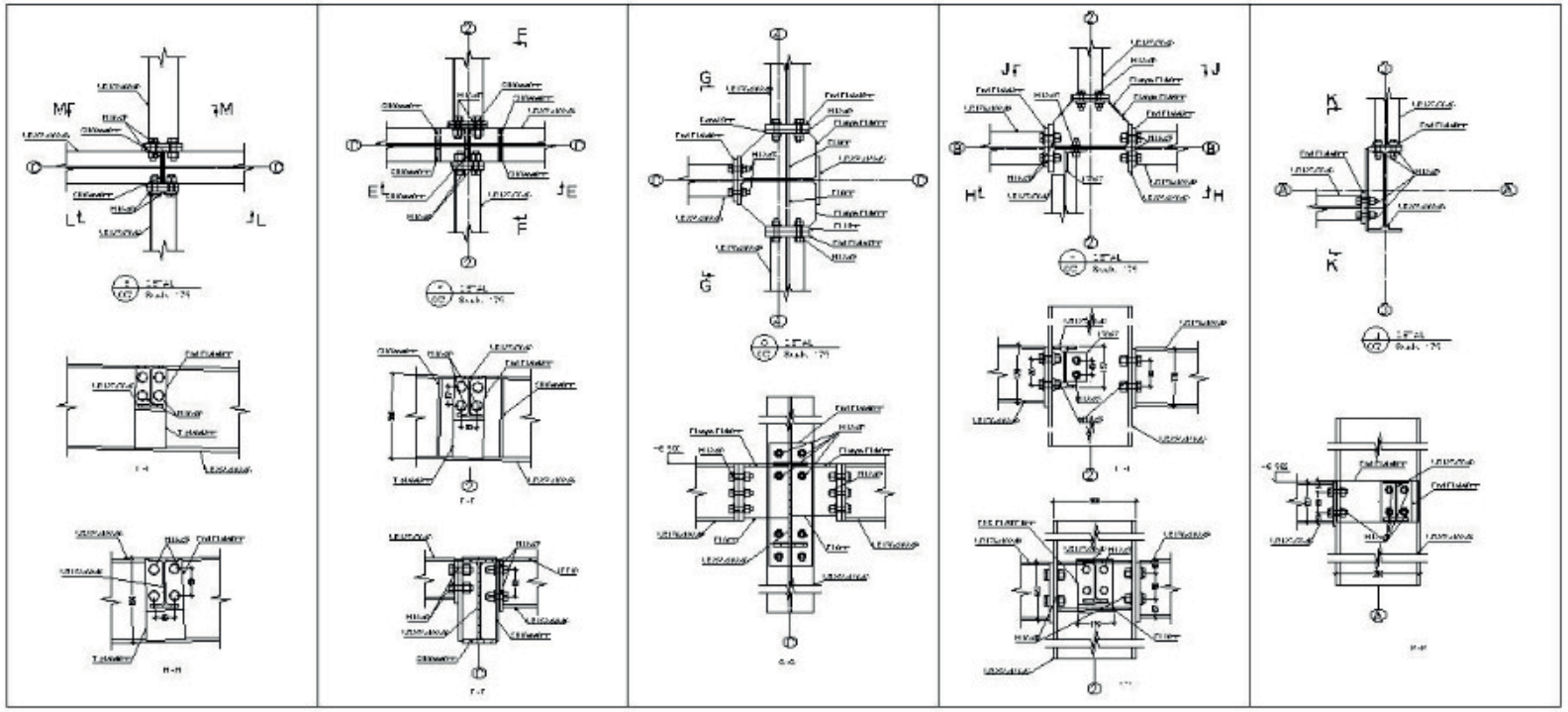

GENERAL NOTES

NOTE:
ALL PARTS AND SHAPES ARE TO BE FABRICATED STRICTLY ACCORDING TO ARCHITECTURAL DRAWINGS AND SPECIFICATIONS.
HAVE A TOTAL CONTROL

AGCo design

ING. JUHAIM SHAHOUD

CLIENT
Abdullah Al-Jazirí

PROJECT
Etihad Bosnian Village

DESCRIPTION
ROOF-CONNECTIONS

ARCHITECTURE: Eng.	Hydraulic: Eng.
STRUCT. DESIGN: Eng.	Geo-tech: Eng.
ELECTRICAL DESIGN: Eng.	Geo-tech: Eng.

Ref.	DWG No. 02
DATE	SCALE / SIZE: A1

NO.	DATE	REVISIONS

AL BANOOSH

First Branch Al Banoosh Caterings

Interior Design & Fit out by AGCO

البانوش
AL BANOSH
CATERING
est. 2017
البانوش
AL BANOSH
CATERING

AL BANOOSH

Second Branch Al WaslClub- Dubai

Al WaslClub

Second Branch

BLENZ CAFE

AGCO

D u b a i

Interior design

CHINEESE RESTAURANT

Abu Dhabi

CHINEESE
Restaurant

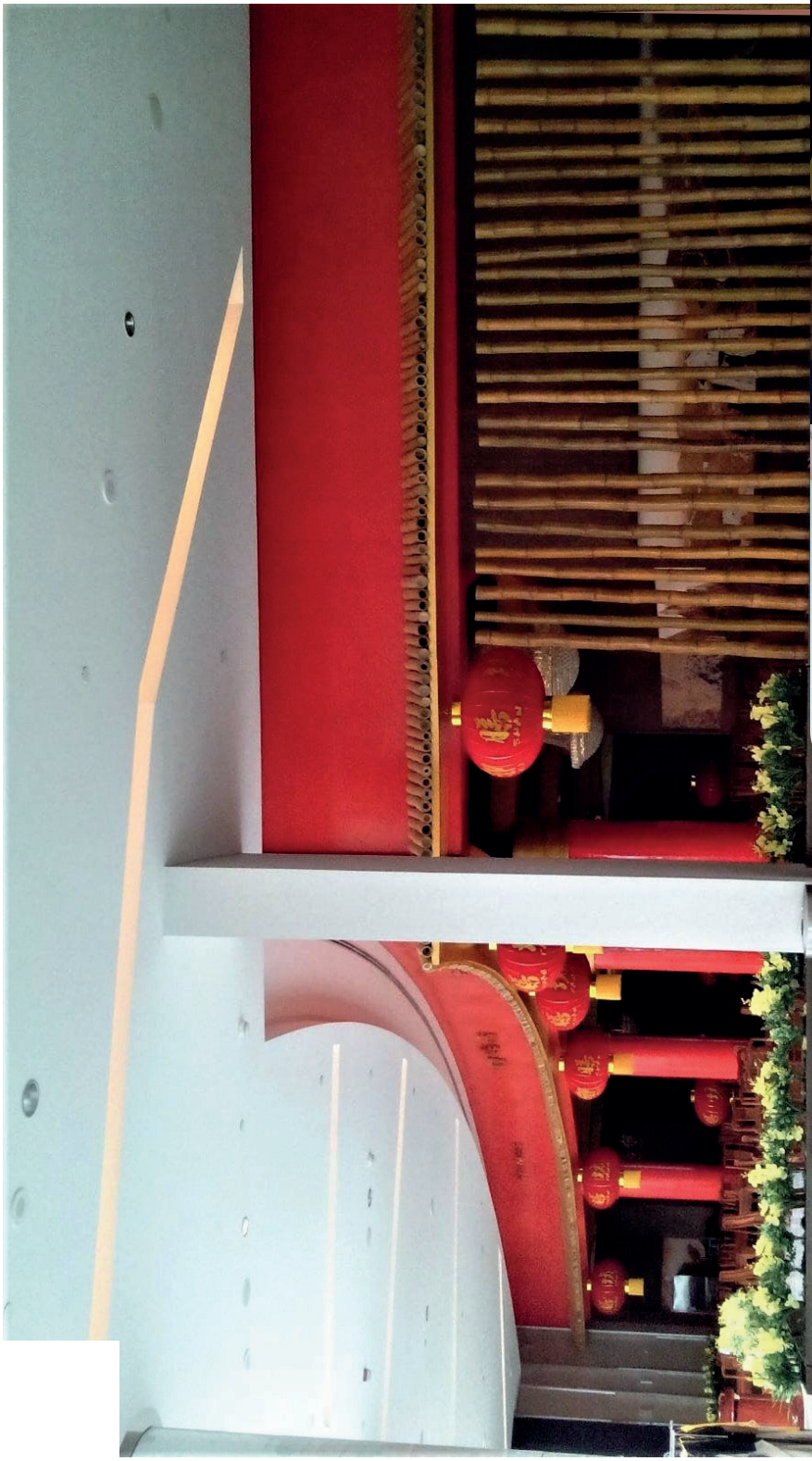

DANDANA CAFE

Dubai - UAE

AGCO

DANDANA

From Berlin
& Chicago

DÖNER & GYROS

AGCO
Abu Dhabi

DÖNER & GYROS
دونر & جيروس

DONER & GYROS

The plans for the place have been carefully studied

The interior and exterior design has been designed

suitable for the place

Ideas were also discussed with the owner of the place

DONER & GYROS

The appropriate building materials were used

Coordination with all the ideas that have been selected

The appropriate brushes have also been selected

Light colors were adopted to suit the restaurant

The colors of the furnishings were also consistent with the colors of the decor and design

The most important thing in all of this

The process of selecting brushes was well thought out in terms of prices and quality

DONER KEBAB

DONER KEBAB

The workshops that were working in the place are all part of our staff

Commitments

The deadlines for developing ideas, studies and designs for the place were strictly adhered to

Customer satisfaction

Achieving customer satisfaction was the most important thing we did
It was achieved and we are still in contact with the client to this day

DONER KEBAB

It is not easy to achieve customer satisfaction and we have achieved it and continue to pay attention to any adjustments he wants to make in the long term

DR.K CLINIC DUBAI JLT

Interior Design & Fit out by AGCO

ABOUT DESIGN

The blue color was adopted mainly because it represents the medical profession

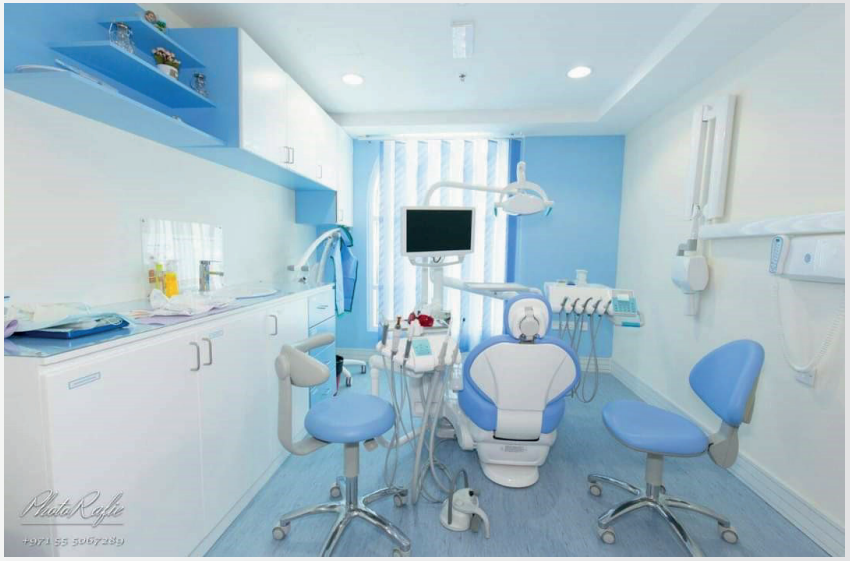

THE DOCTOR'S MAIN ROOM

THE RECEPTION AREA

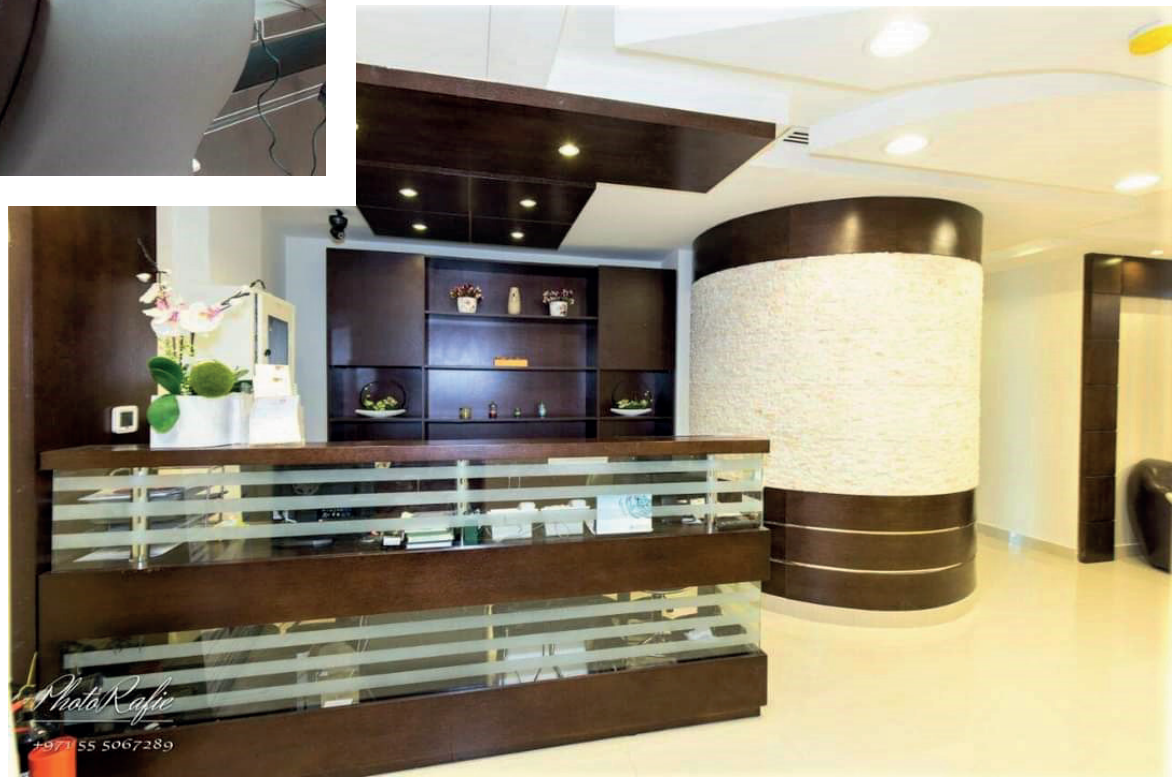

JABEL ALI MALL

Proposed design
for Hybermarket

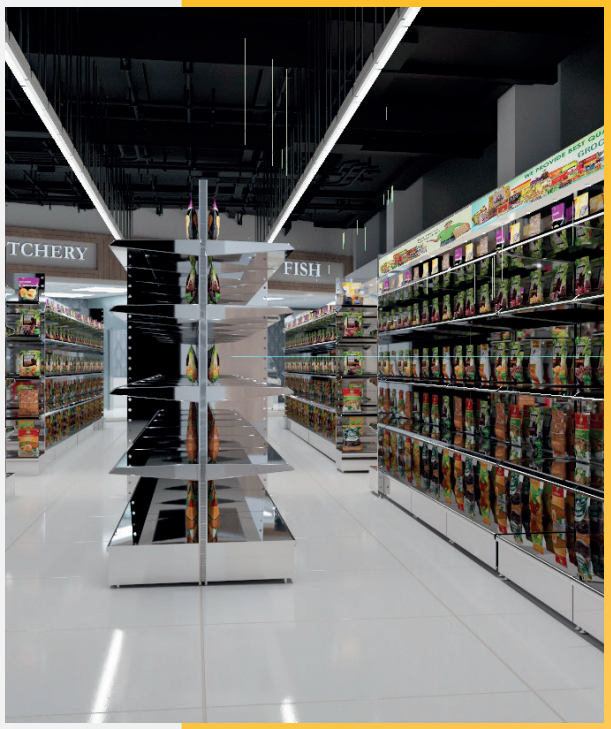

STYLE DESIGN

Jabel Ali mall

A study of plans and interior designs was presented with proposed ideas for all the project

Peaceful colors were chosen for the place

ROASTERY

Jabel Ali mall

Mens Wear
Section

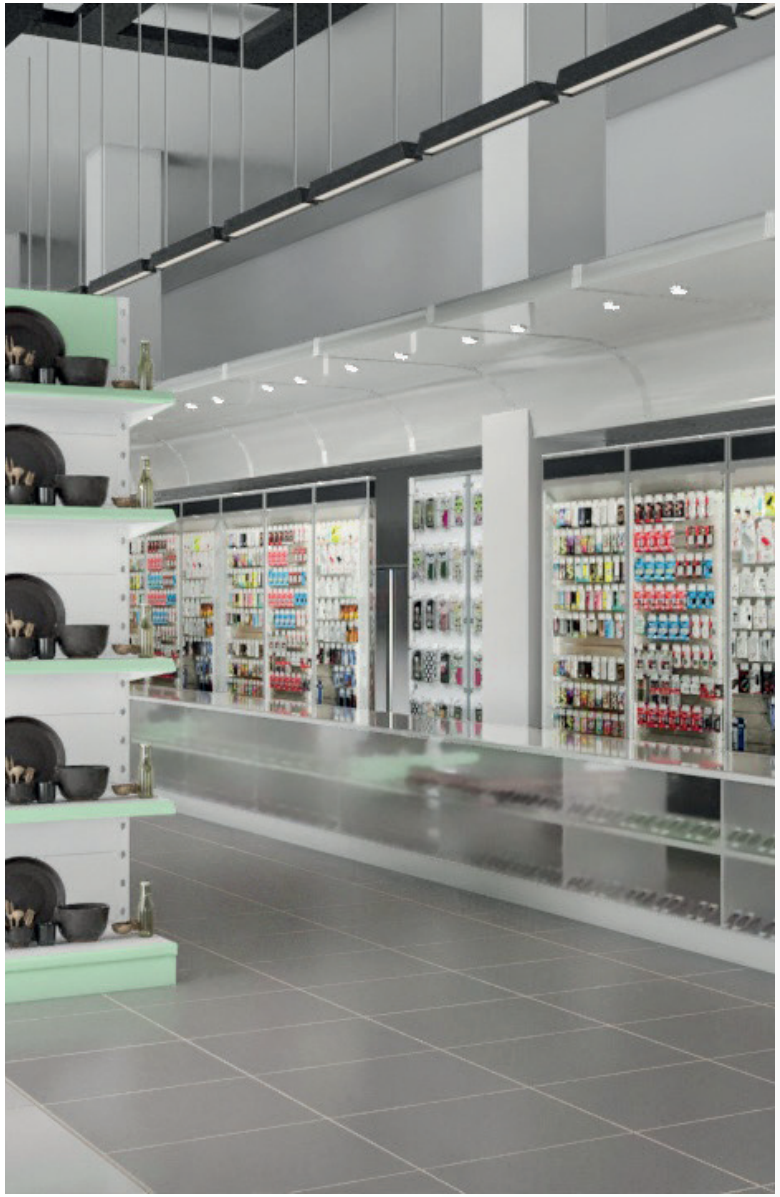

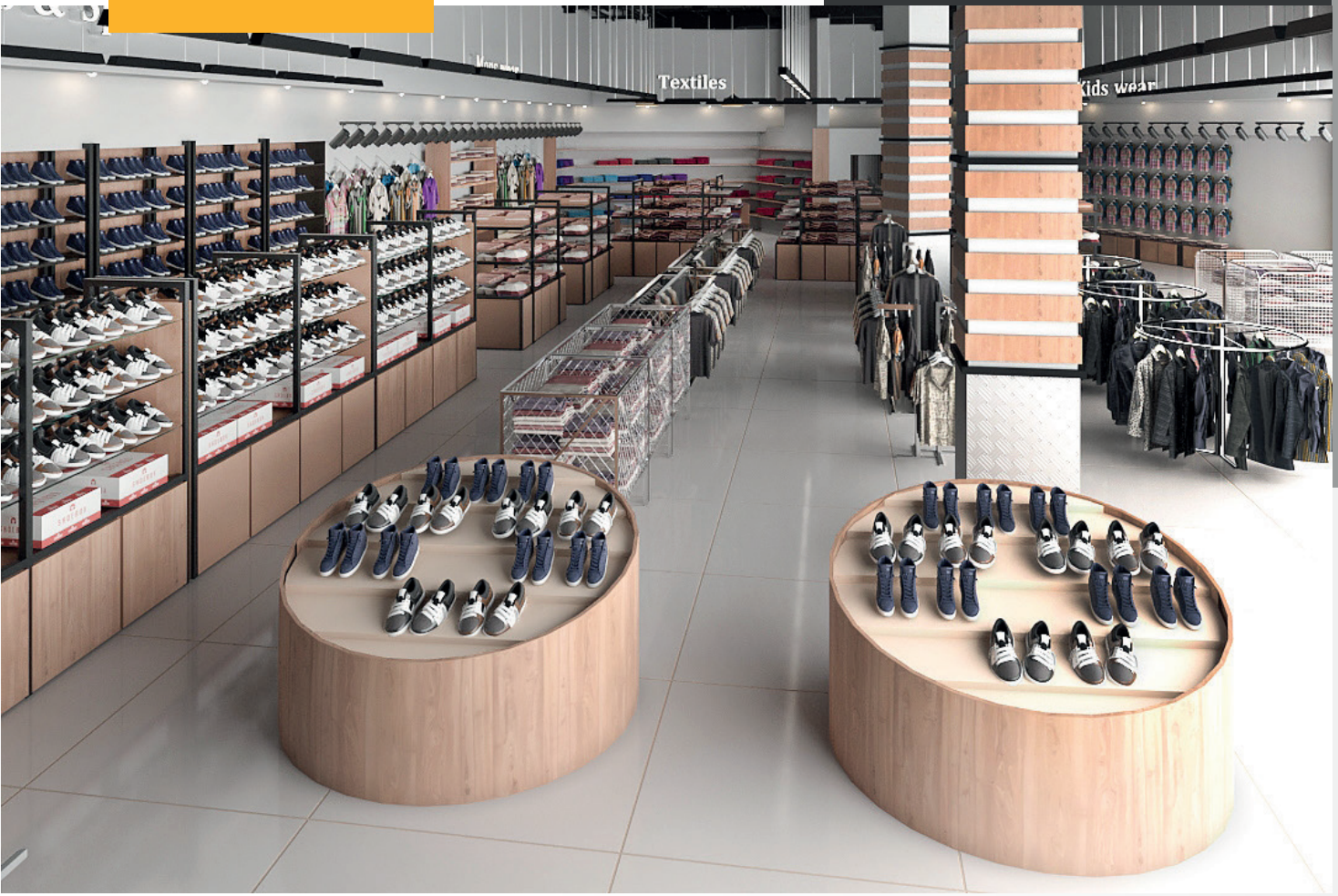
Textiles

STEEL STRUCTURE

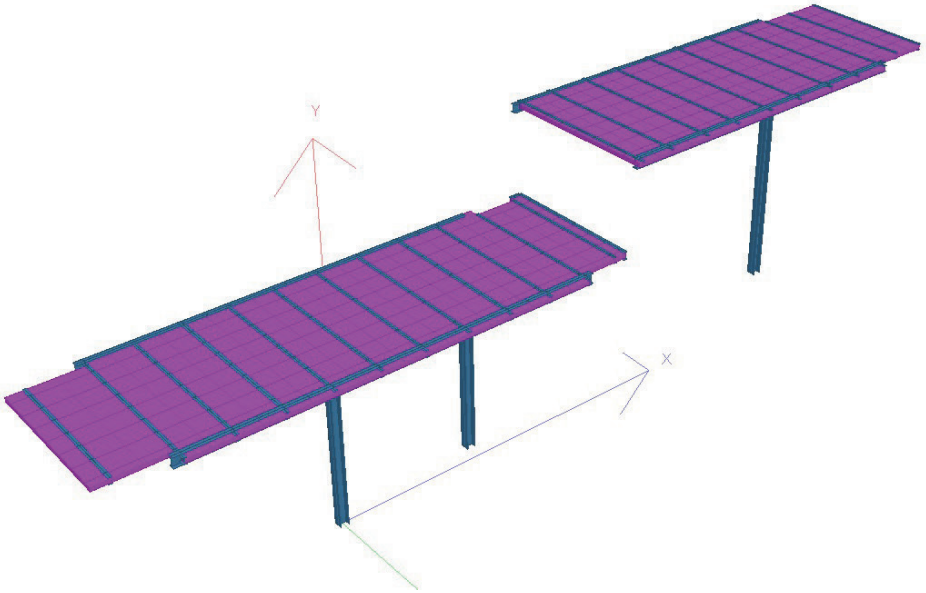

Project name: Jabal Ali Mall Extension

- Description: 95m2 steel mezzanine for commercial usage.
- Purpose: provide an extra selling area inside Jabal Ali Mall
- Address: Jabal Ali industrial area-Dubai
- Scope of work: Steel Design, Shop drawing, Fabrication, and installation
- Main components: Hot-rolled sections, Deck slab, and Chequered Plates.
- overall tonnage: 5.5 ton

-Situation: under process

Analytical model

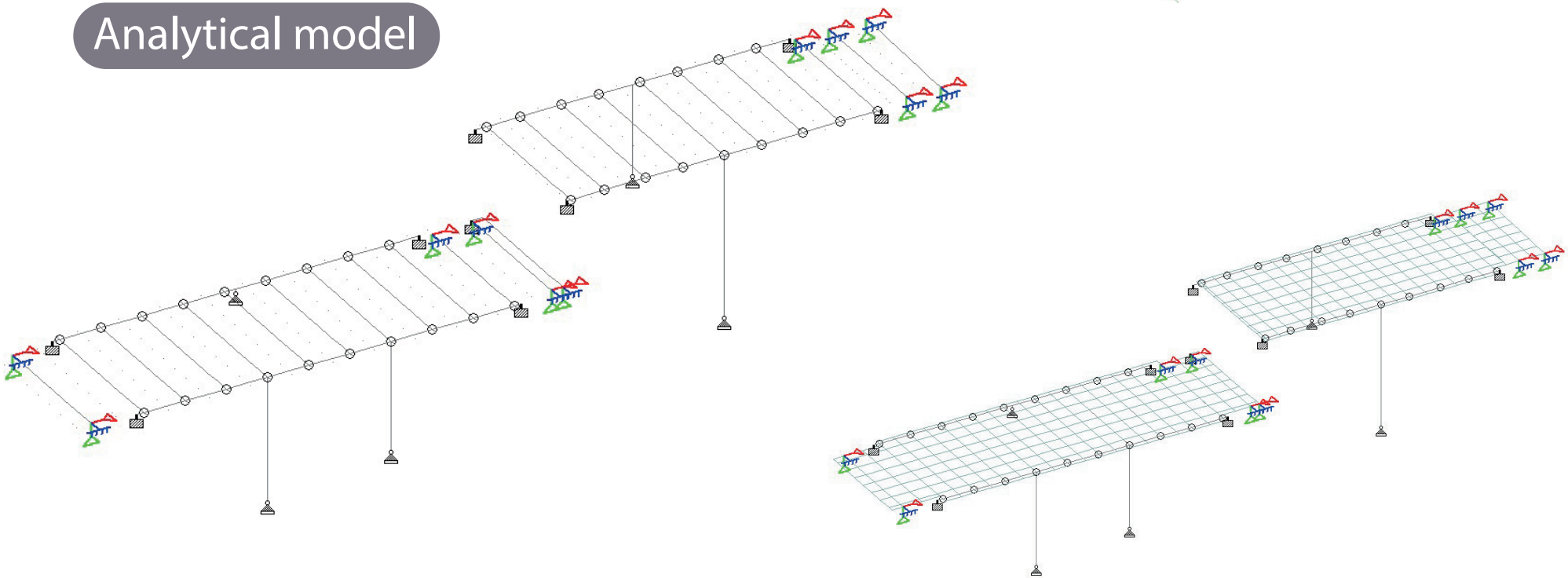

3D Models

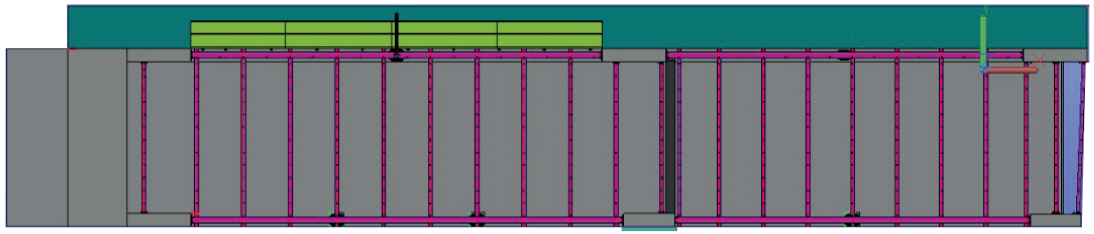

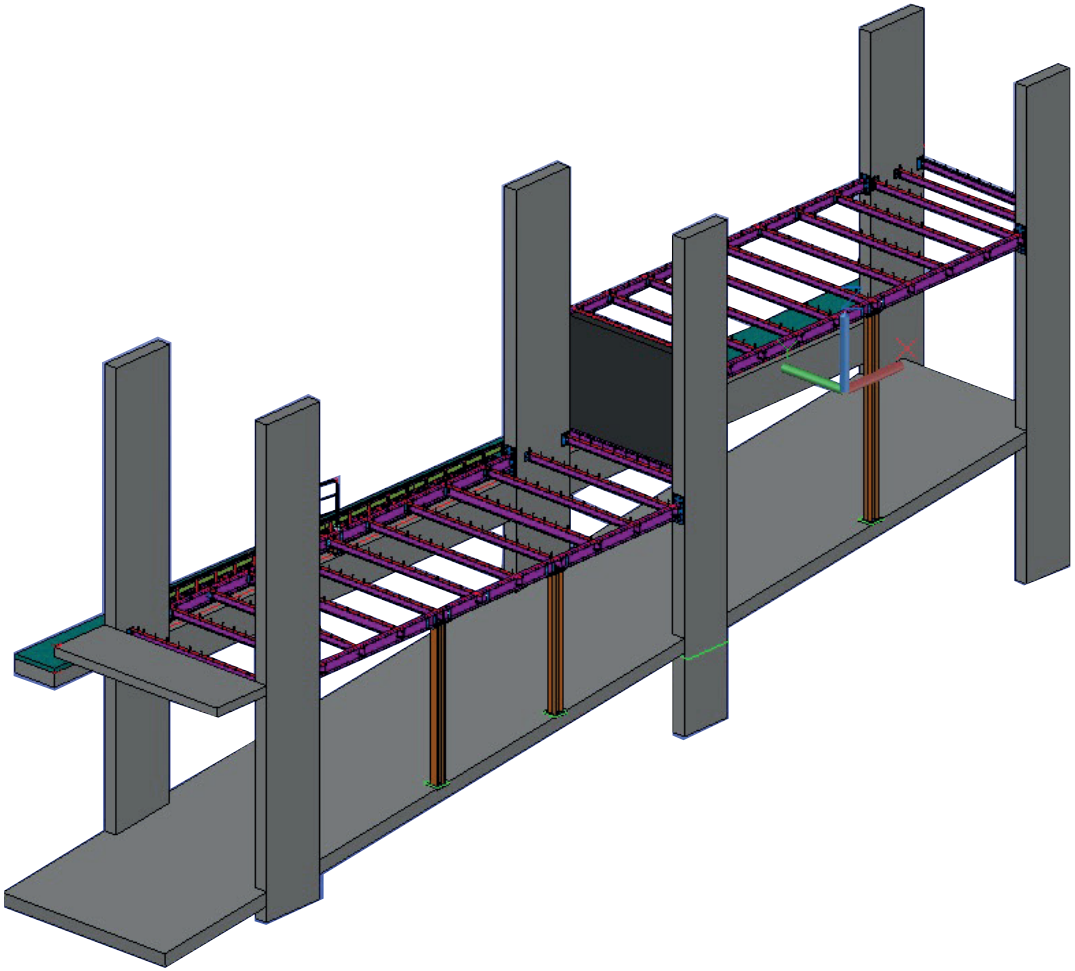

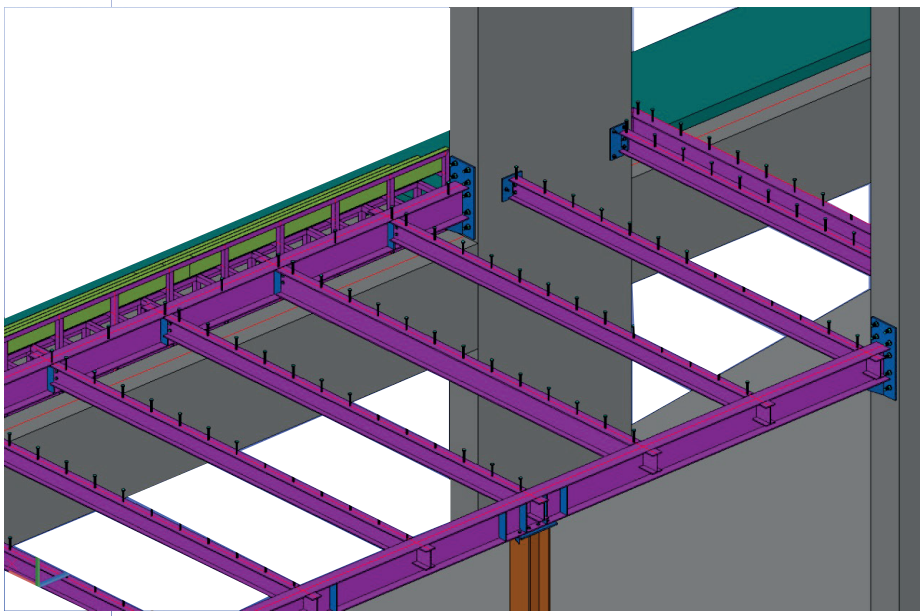

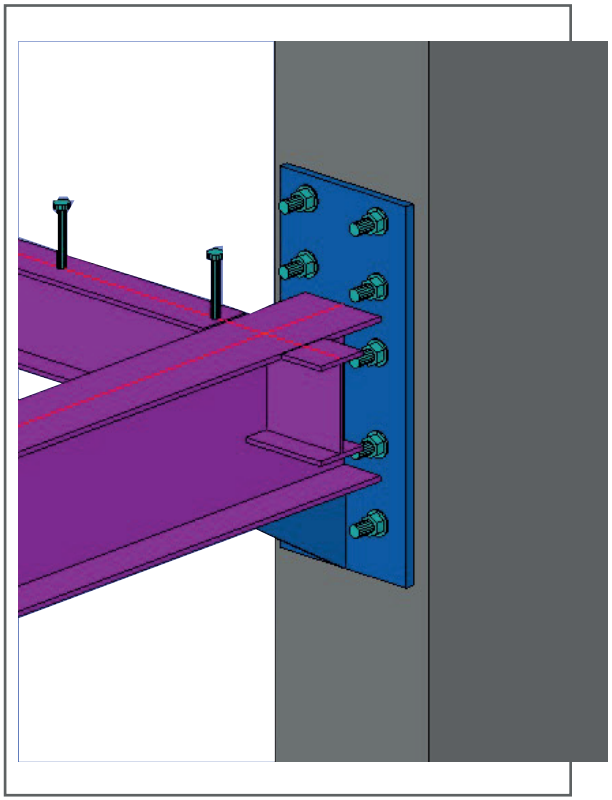

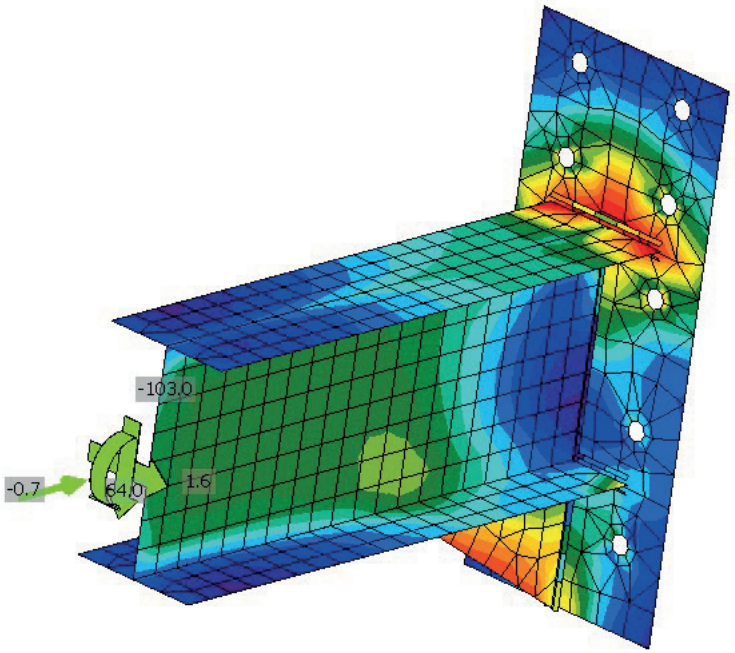
-103.0
-0.7
64.0
1.6

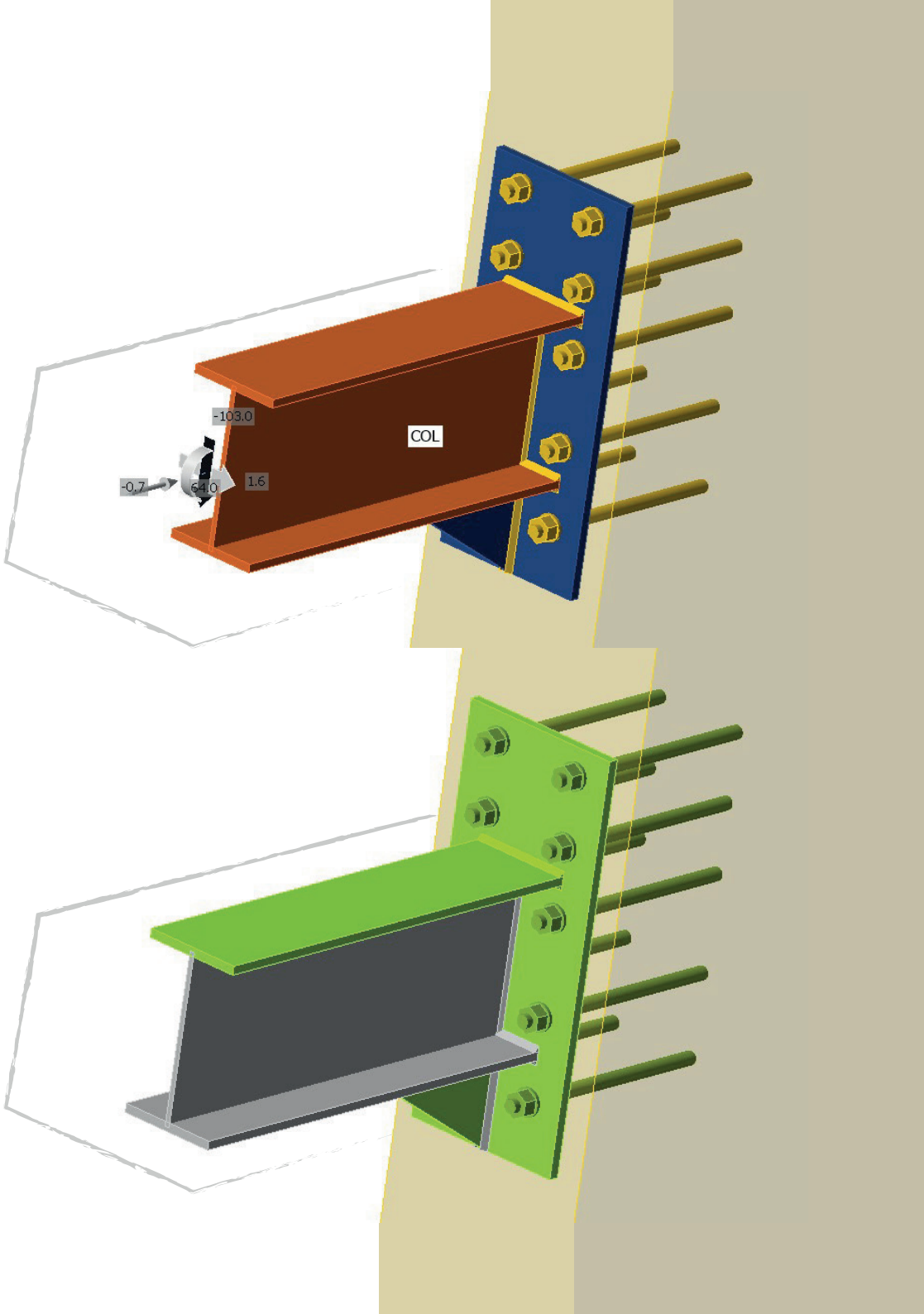
-103.0
COL
-0.7
64.0
1.6

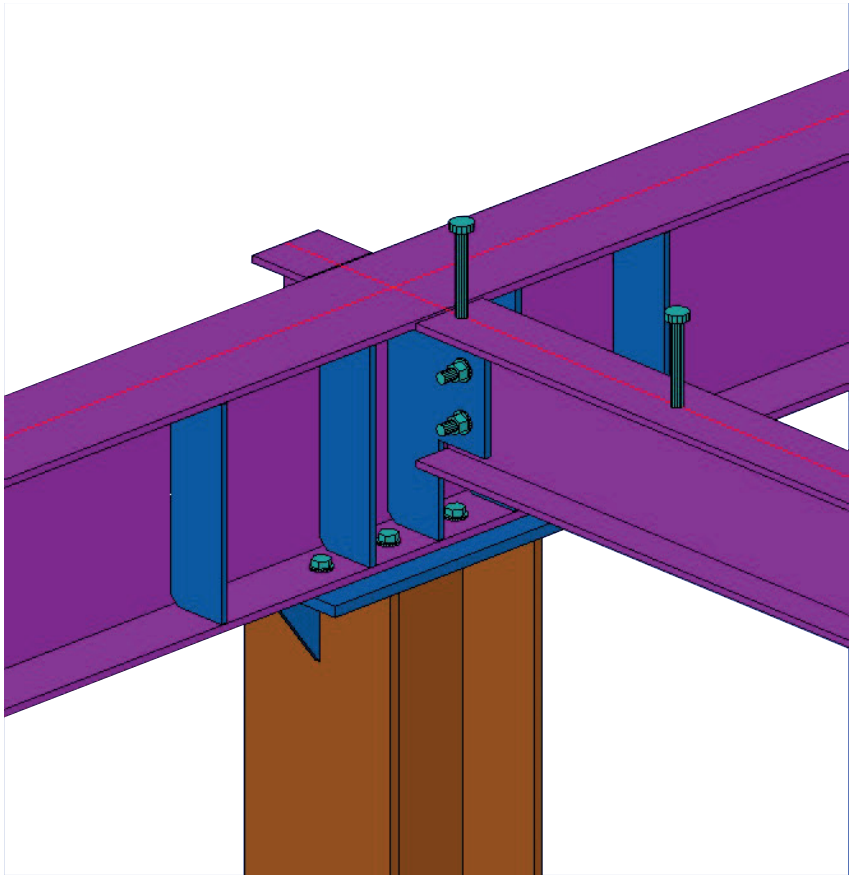

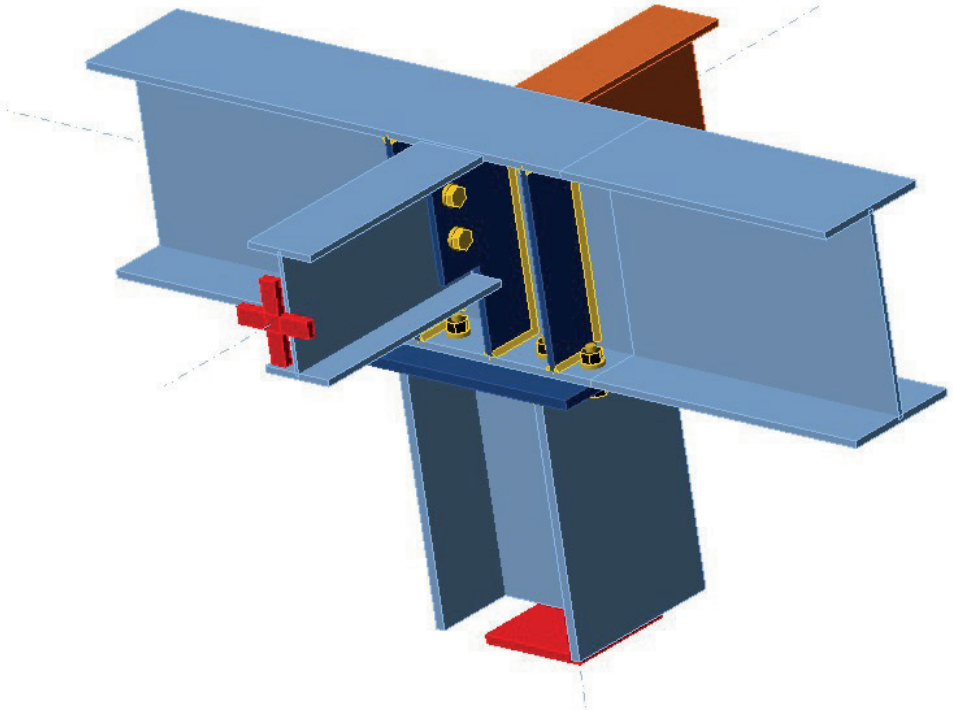

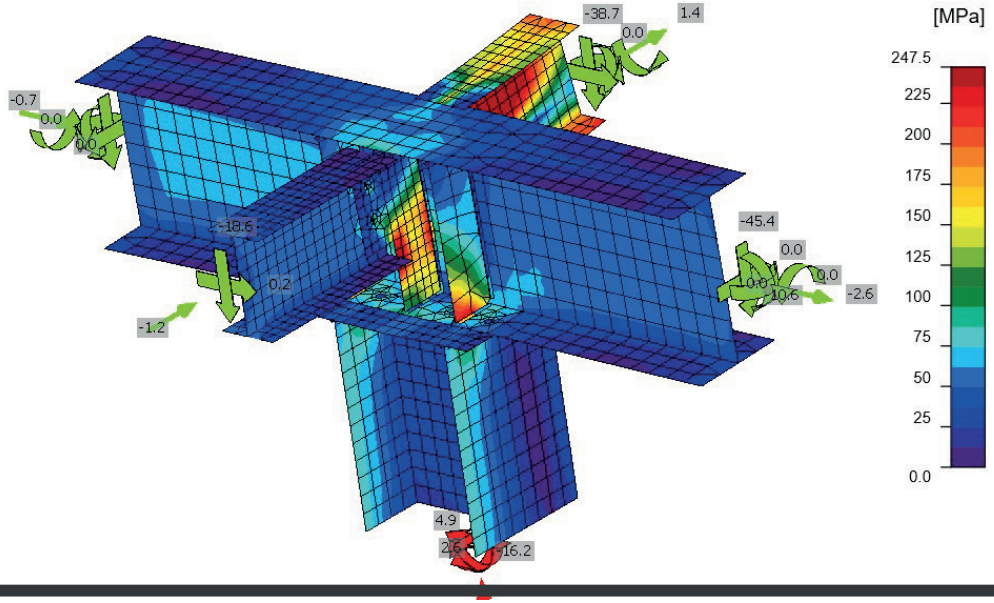
[MPa]
247.5
225
200
175
150
125
100
75
50
25
0.0
-38.7
1.4
0.0
-0.7
0.0
0.0
-18.6
0.2
-1.2
-45.4
0.0
0.0
10.6
-2.6
4.9
2.6
-16.2

JIHOME CAFE

Interior Design & Fit out by AGCO

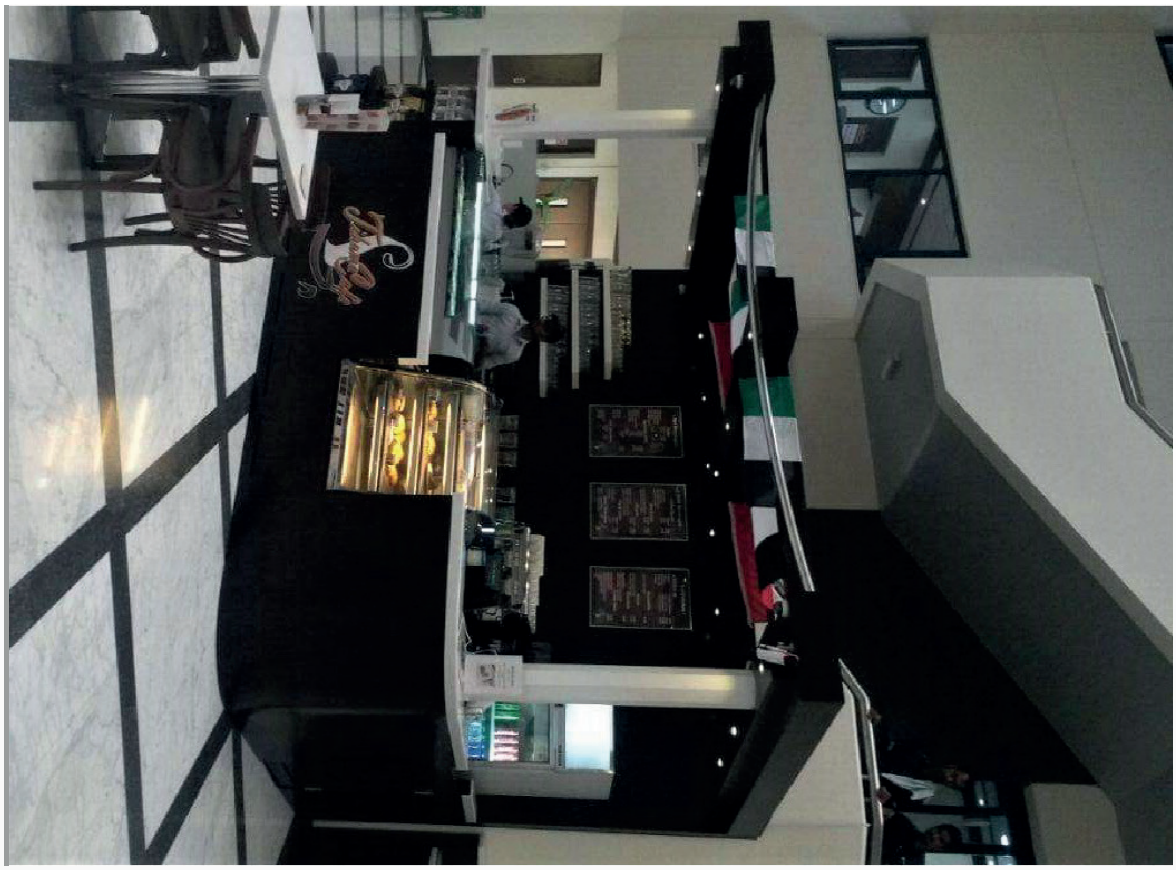

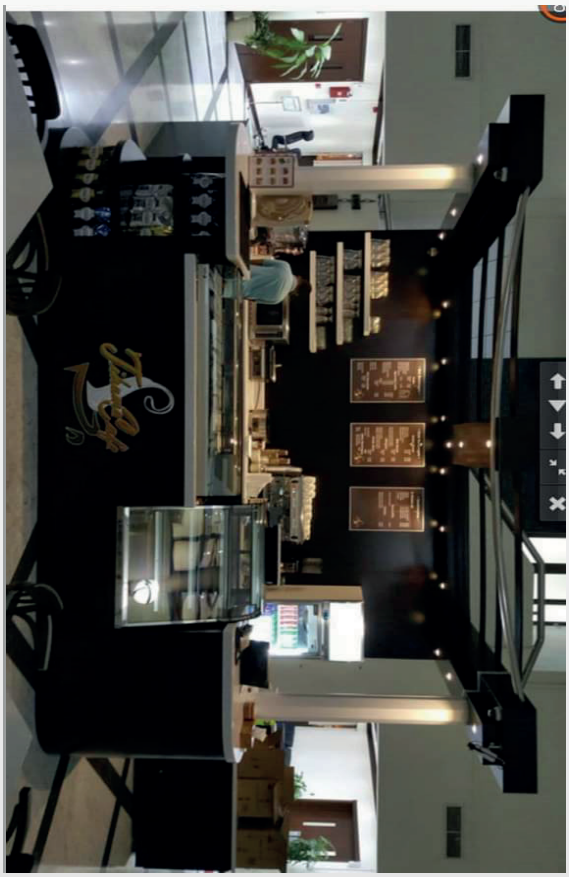

GRAPHIC DESIGN PORTOFOLIO

MADE WITH LOVE

Interior Design & Fit out by AGCO

Abu Dhabi

MADE WITH
love
MADE WITH LOVE RESTAURANT
مطعم ميد وذلوف
OPEN

Abu Dhabi
UAE

Made With Love

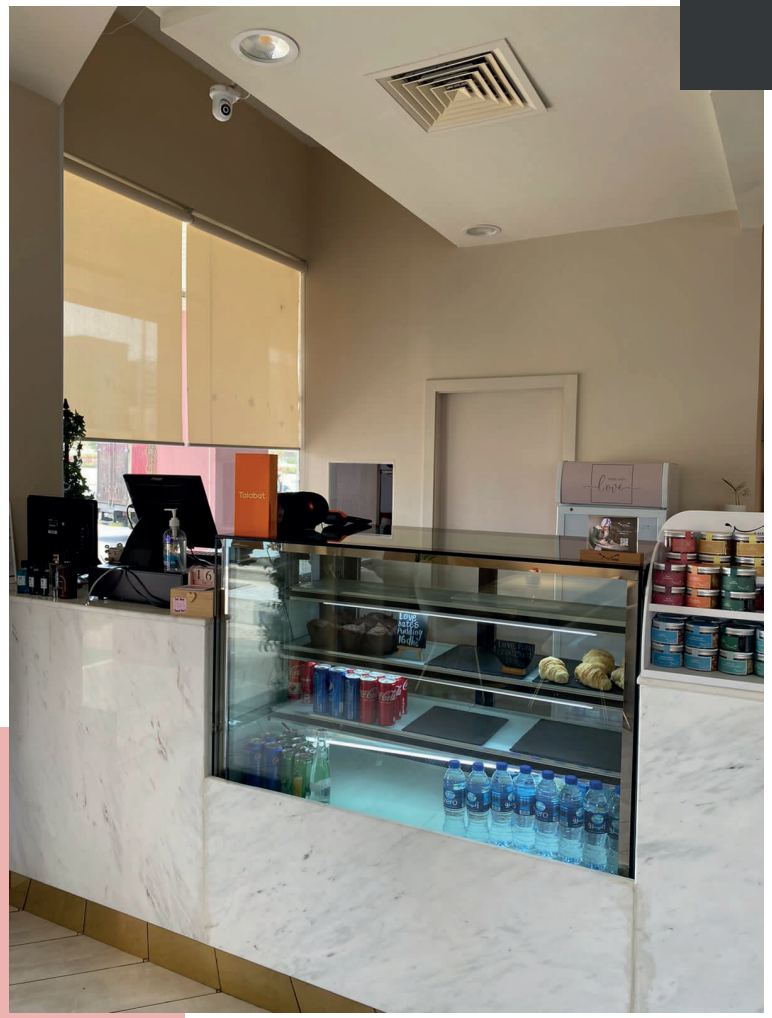

AL MAJLES

Interior Design & Fit out by AGCO

Interior Design & Fit out by AGCO

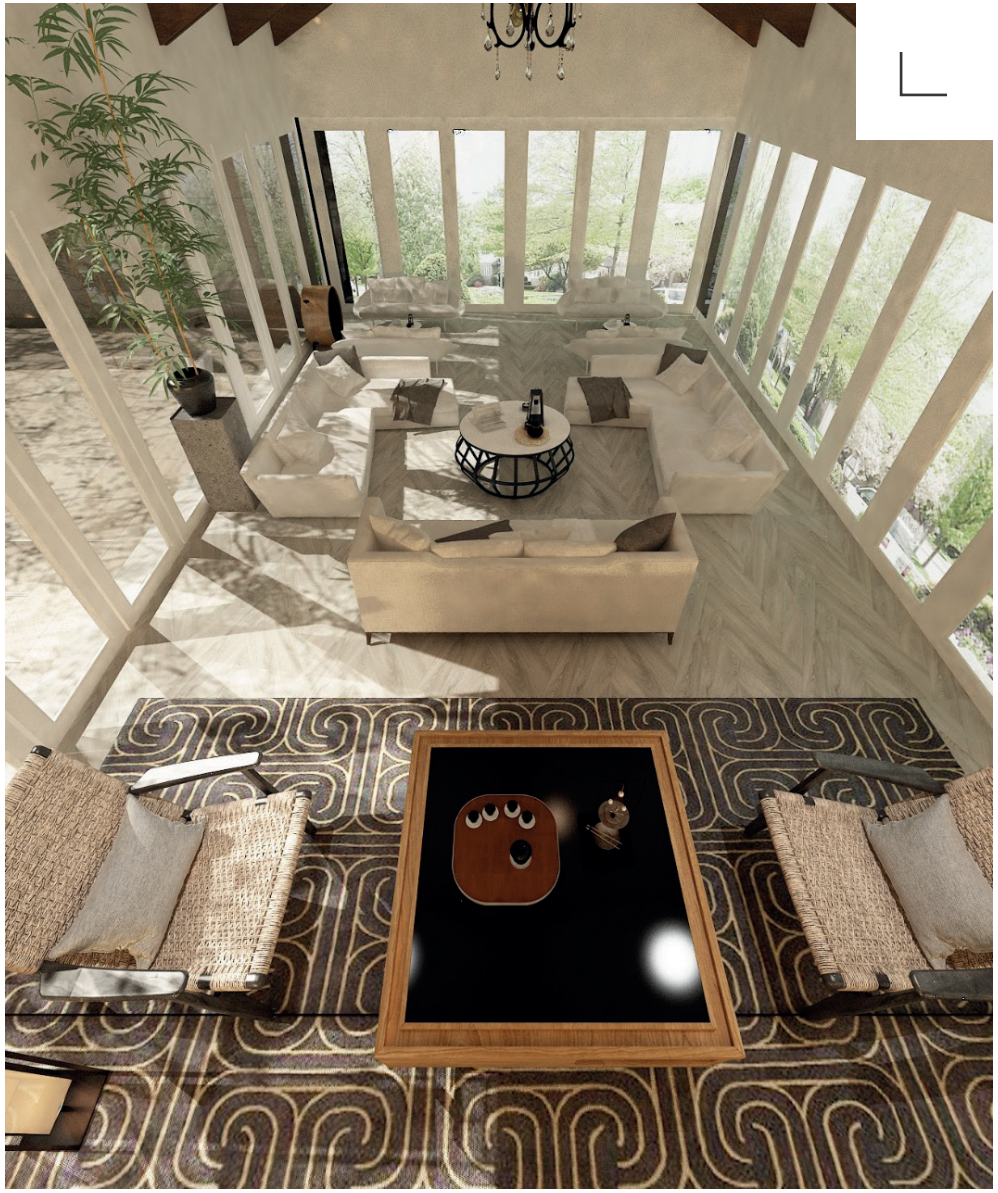

Interior Design & Fit out by AGCO

Interior Design & Fit out by AGCO

KUWAIT HOME

Interior Design & Fit out by AGCO

Interior Design & Fit out by AGCO

KITCHENS

Interior Design & Fit out by AGCO

Interior Design by AGCO

Interior Design by AGCO

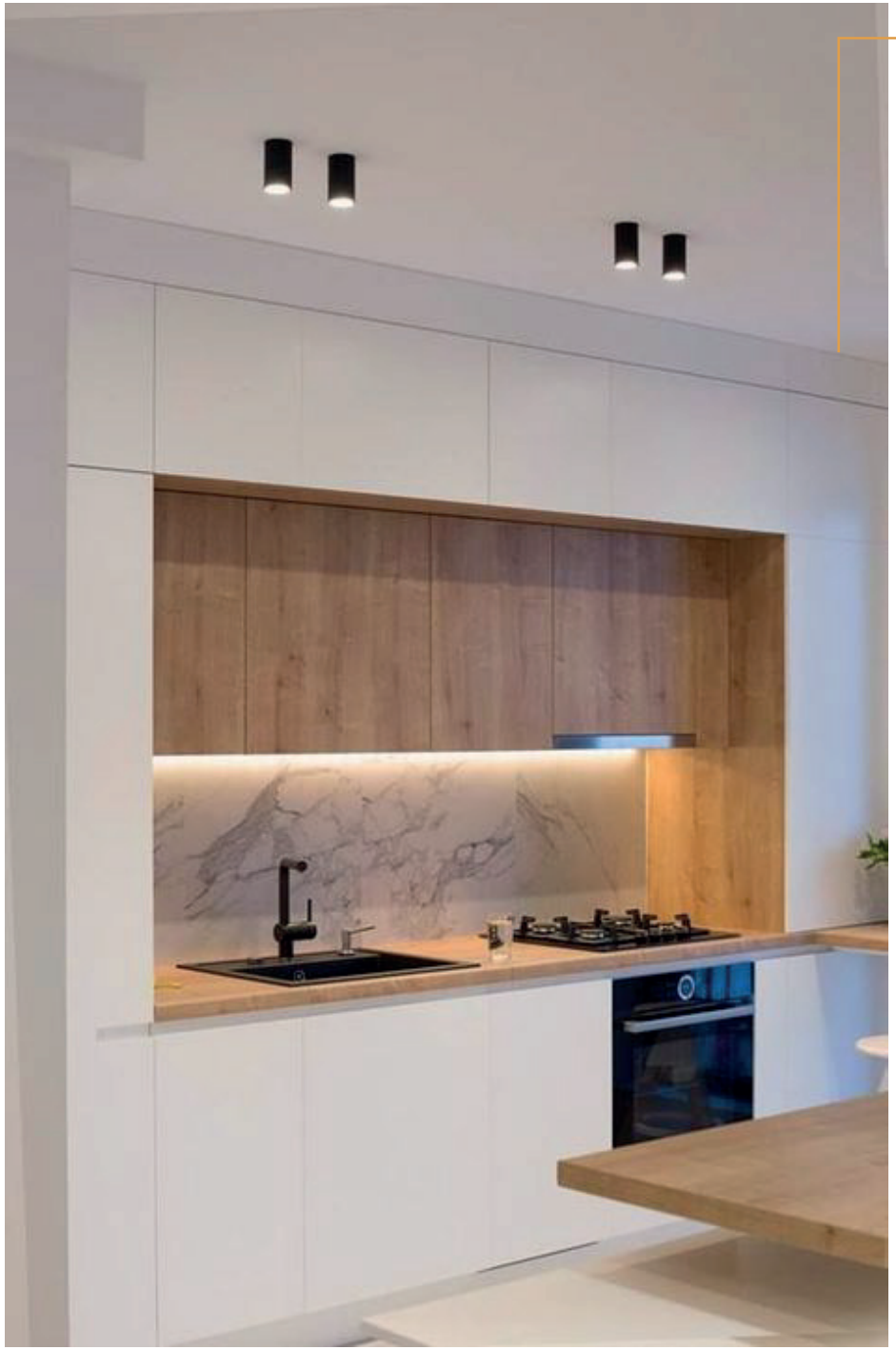

BATHS

Interior Design & Fit out by AGCO

Master Bath

Guest Bath

Living Room Bath

Majlis Bath

AGCO DESIGN

Factory

AL ttay Al khawaneej

AL Ttay

Al khawaneej

Factory Products

DOORS

Interior Design & Fit out by AGCO

JOTUN

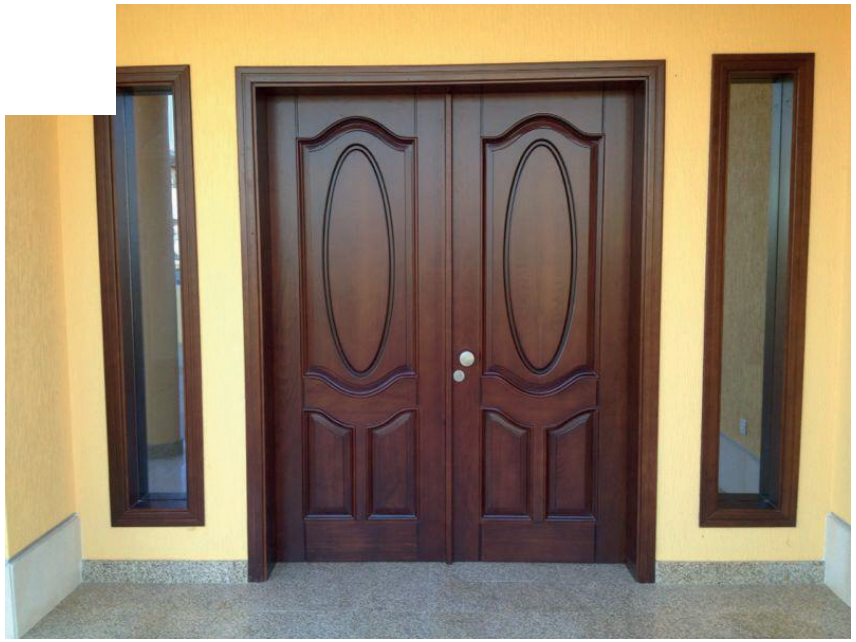

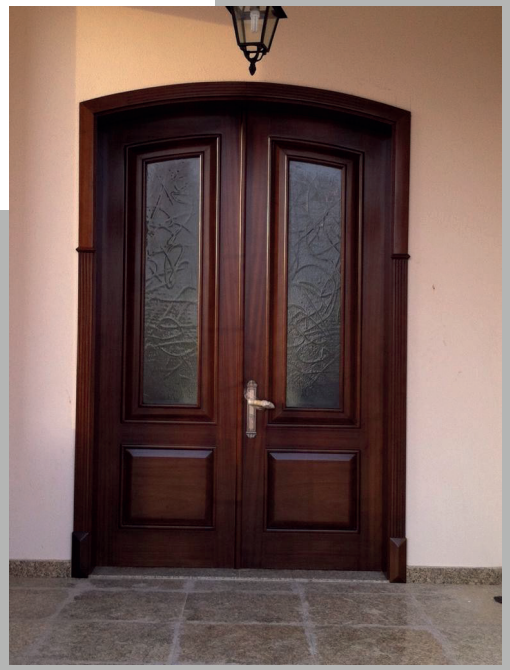
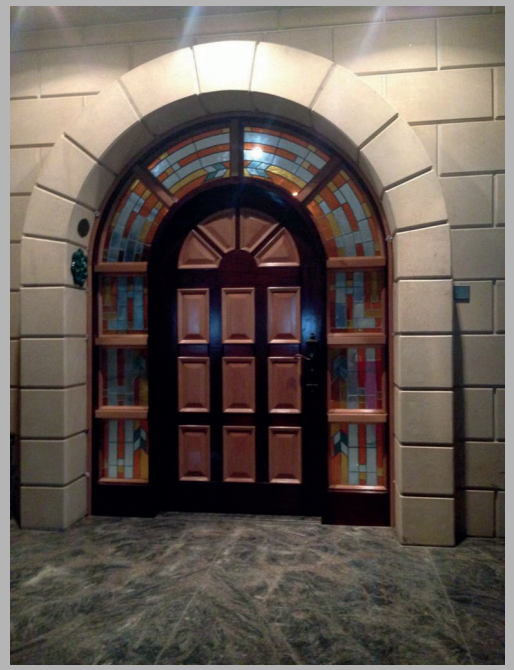
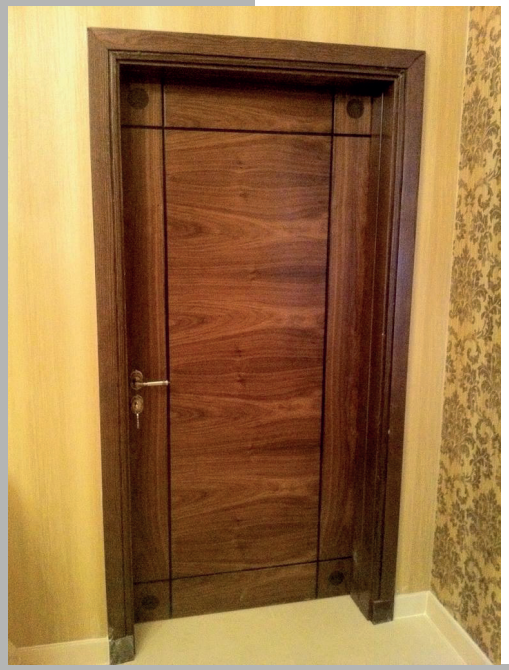

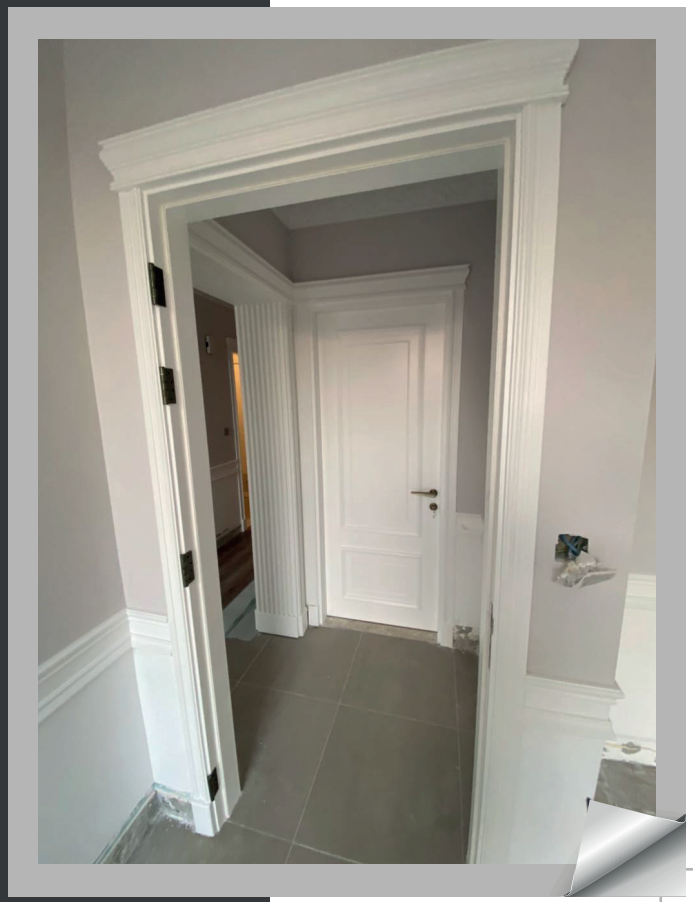

THANK YOU

AG Co DESIGN EST 2005

Creative Design

AGCO Studio

We are a group of engineers, artists, designers, and creatives in DUBAI - UAE.

CONTACT

+971 56 911 0002
+971 4 27 22 422
AGCODESIGN@GMAIL.COM
UAE - DUBAI - BUSINESS BAY - THE BINARY TOWER
OFFICE NO : 1604