Altium STM32 Example Board

USB Connector and LDO Regulator (+5V to +3V)

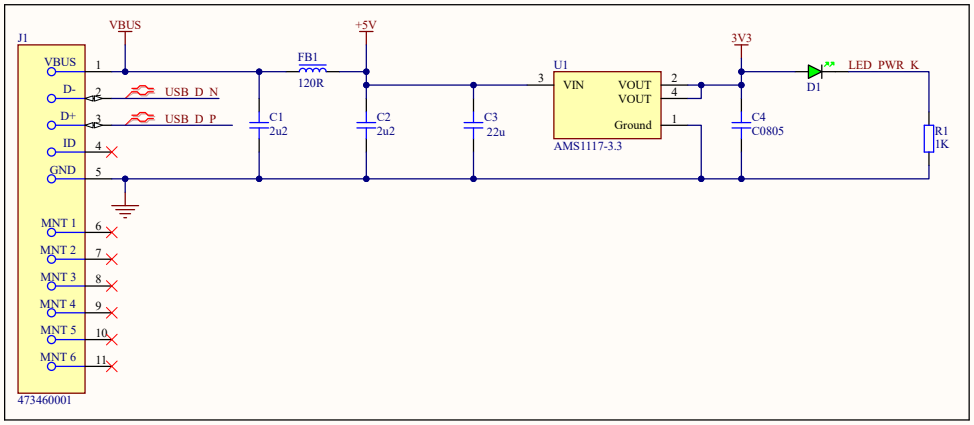

Inertial Measurement Unit (MPU - 6050)

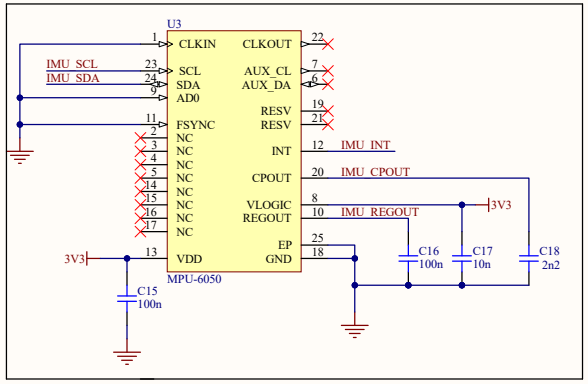

I2C Addr.: 0x68

Microcontroler (STM32F4)

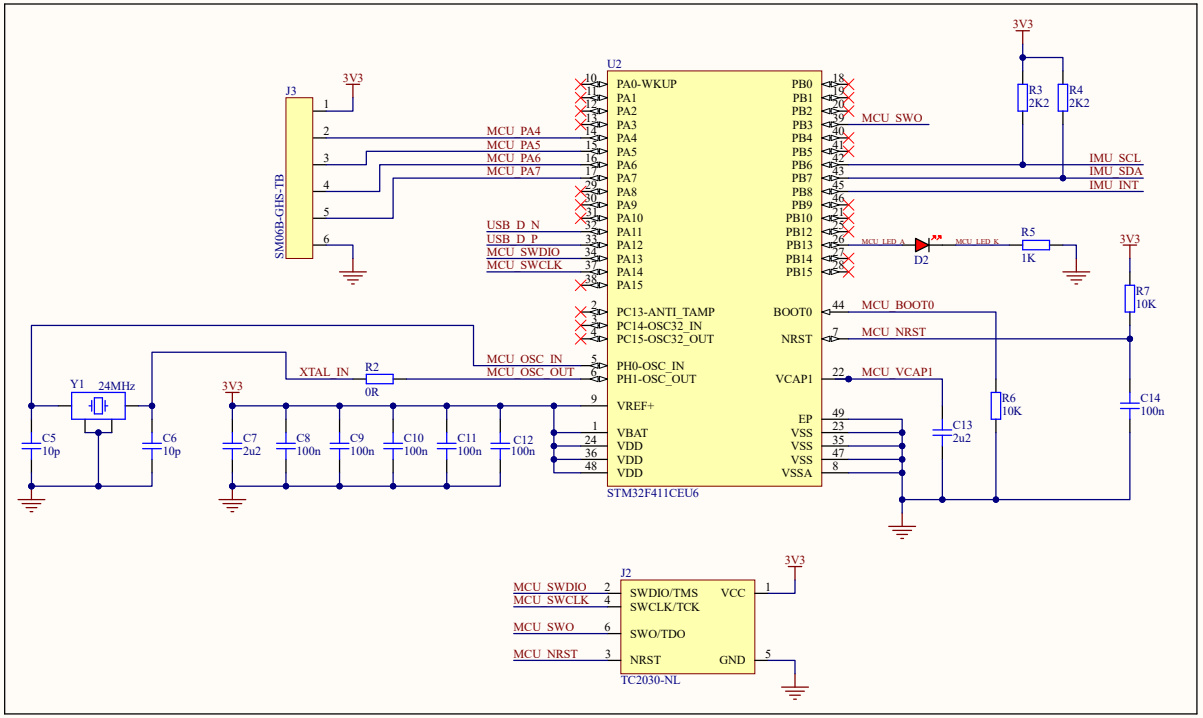

Title		
Size A3	Number	Revision
Date: 4/16/2026		Sheet of
File: E:\ENG Programs Files\..\Sheet1.SchDoc		Drawn By: