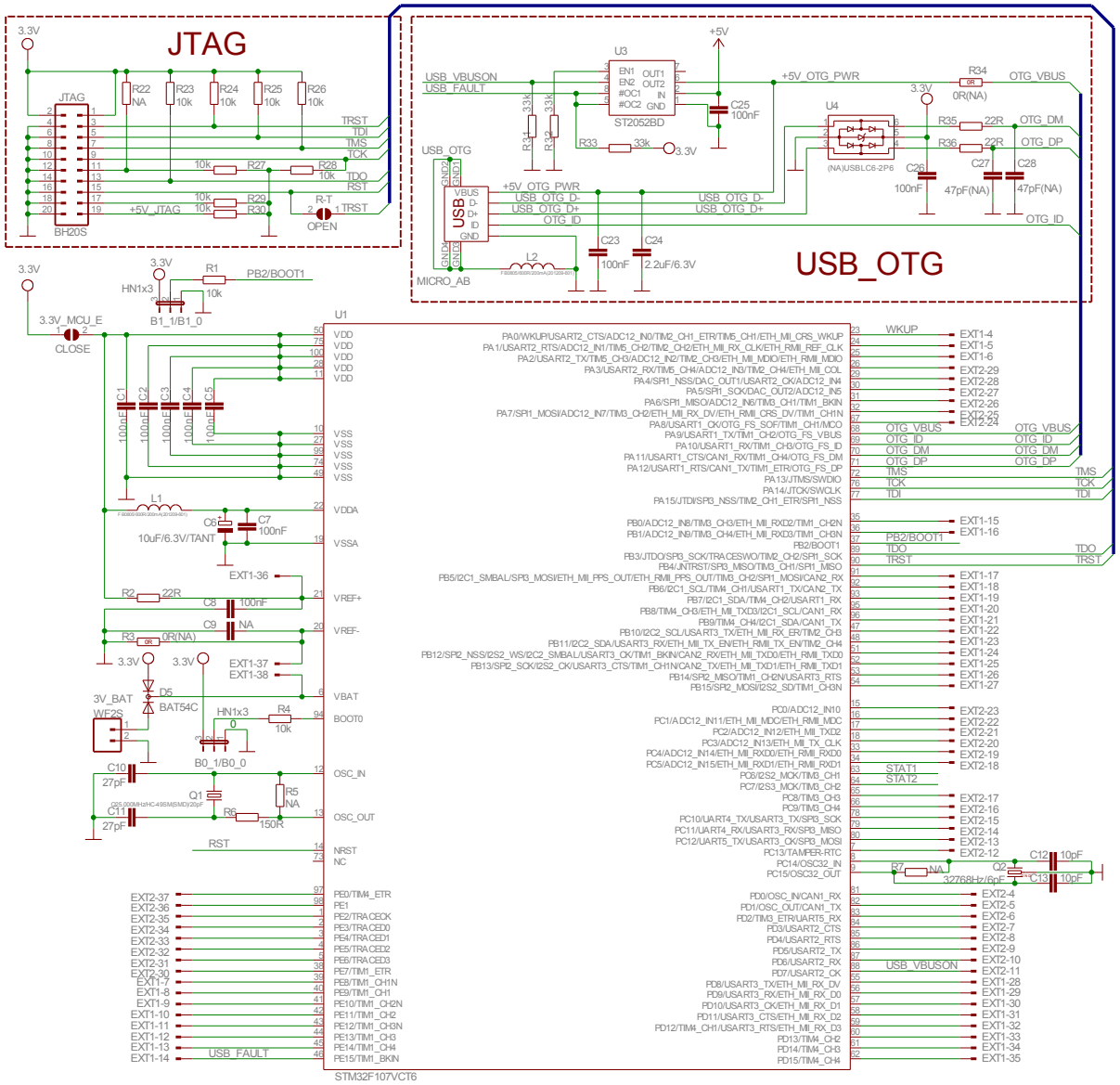

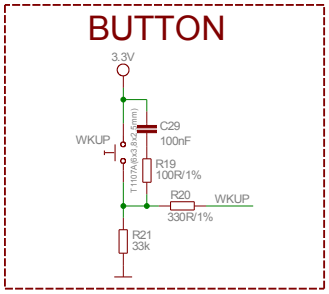

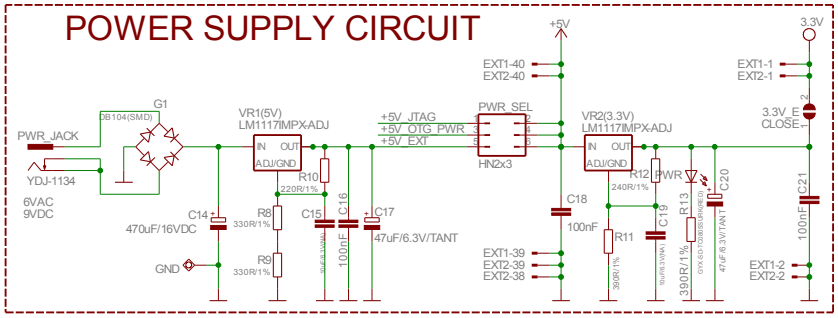

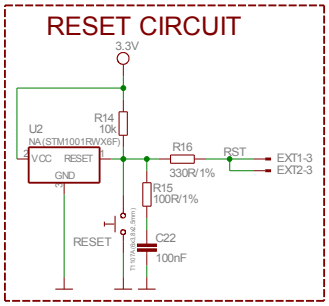

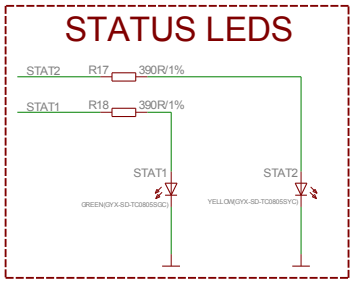

STM32-H107

Rev. Initial

COPYRIGHT(C) 2011, OLIMEX Ltd.

http://www.olimex.com/dev