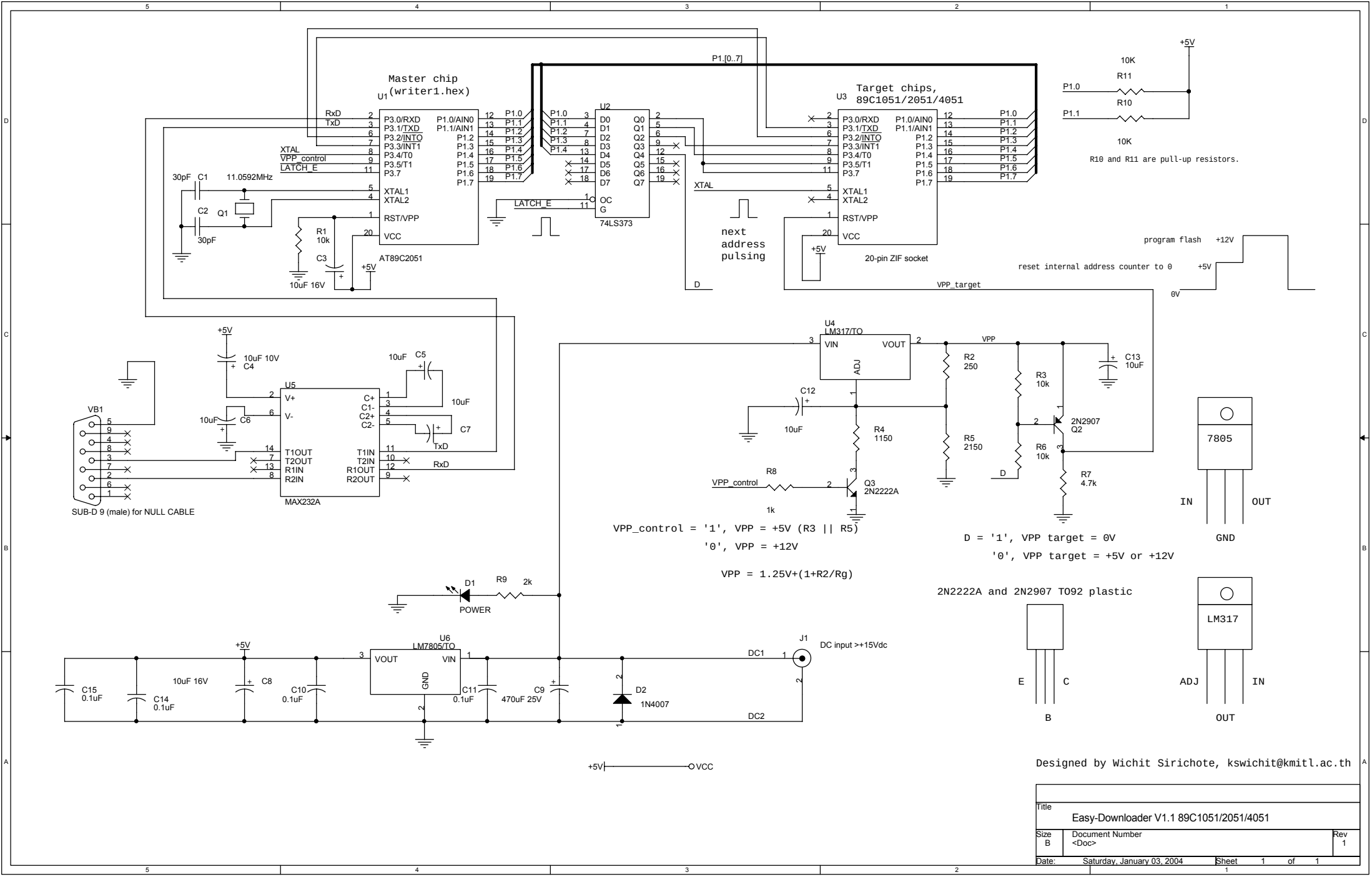
Master chip
U1 (writer1.hex)
AT89C2051
P3.0/RXD
P3.1/TXD
P3.2/INTO
P3.3/INT1
P3.4/T0
P3.5/T1
P3.7
XTAL1
XTAL2
RST/VPP
VCC
P1.0/AIN0
P1.1/AIN1
P1.2
P1.3
P1.4
P1.5
P1.6
P1.7
RxD
TxD
XTAL
VPP_control
LATCH_E
30pF C1
11.0592MHz
C2 Q1
30pF
R1 10k
C3
10uF 16V
+5V
P1.[0..7]
U2
74LS373
D0
D1
D2
D3
D4
D5
D6
D7
Q0
Q1
Q2
Q3
Q4
Q5
Q6
Q7
OC
G
U3
Target chips,
89C1051/2051/4051
20-pin ZIF socket
next
address
pulsing
D
VPP_target
10K
R11
R10
10K
R10 and R11 are pull-up resistors.
program flash +12V
reset internal address counter to 0 +5V
0V
U4
LM317/TO
VIN
VOUT
ADJ
VPP
R2 250
R3 10k
C13 10uF
C12 10uF
R4 1150
R5 2150
R6 10k
R7 4.7k
2N2907 Q2
R8 1k
VPP_control
Q3 2N2222A
7805
IN
OUT
GND
VB1
SUB-D 9 (male) for NULL CABLE
U5
MAX232A
V+
V-
C+
C1-
C2+
C2-
T1OUT
T2OUT
R1IN
R2IN
T1IN
T2IN
R1OUT
R2OUT
10uF 10V C4
10uF C6
10uF C5
10uF
C7
TxD
RxD
VPP_control = '1', VPP = +5V (R3 || R5)
'0', VPP = +12V
VPP = 1.25V+(1+R2/Rg)
D = '1', VPP target = 0V
'0', VPP target = +5V or +12V
2N2222A and 2N2907 TO92 plastic
E
C
B
LM317
ADJ
IN
OUT
D1 POWER
R9 2k
U6
LM7805/TO
VOUT
VIN
GND
C15 0.1uF
C14 0.1uF
10uF 16V
C8
C10 0.1uF
C11 0.1uF
C9 470uF 25V
D2 1N4007
J1
DC input >+15Vdc
DC1
DC2
+5V
VCC
Designed by Wichit Sirichote, kswichit@kmitl.ac.th
Title
Easy-Downloader V1.1 89C1051/2051/4051
Size B
Document Number
<Doc>
Rev 1
Date: Saturday, January 03, 2004
Sheet 1 of 1