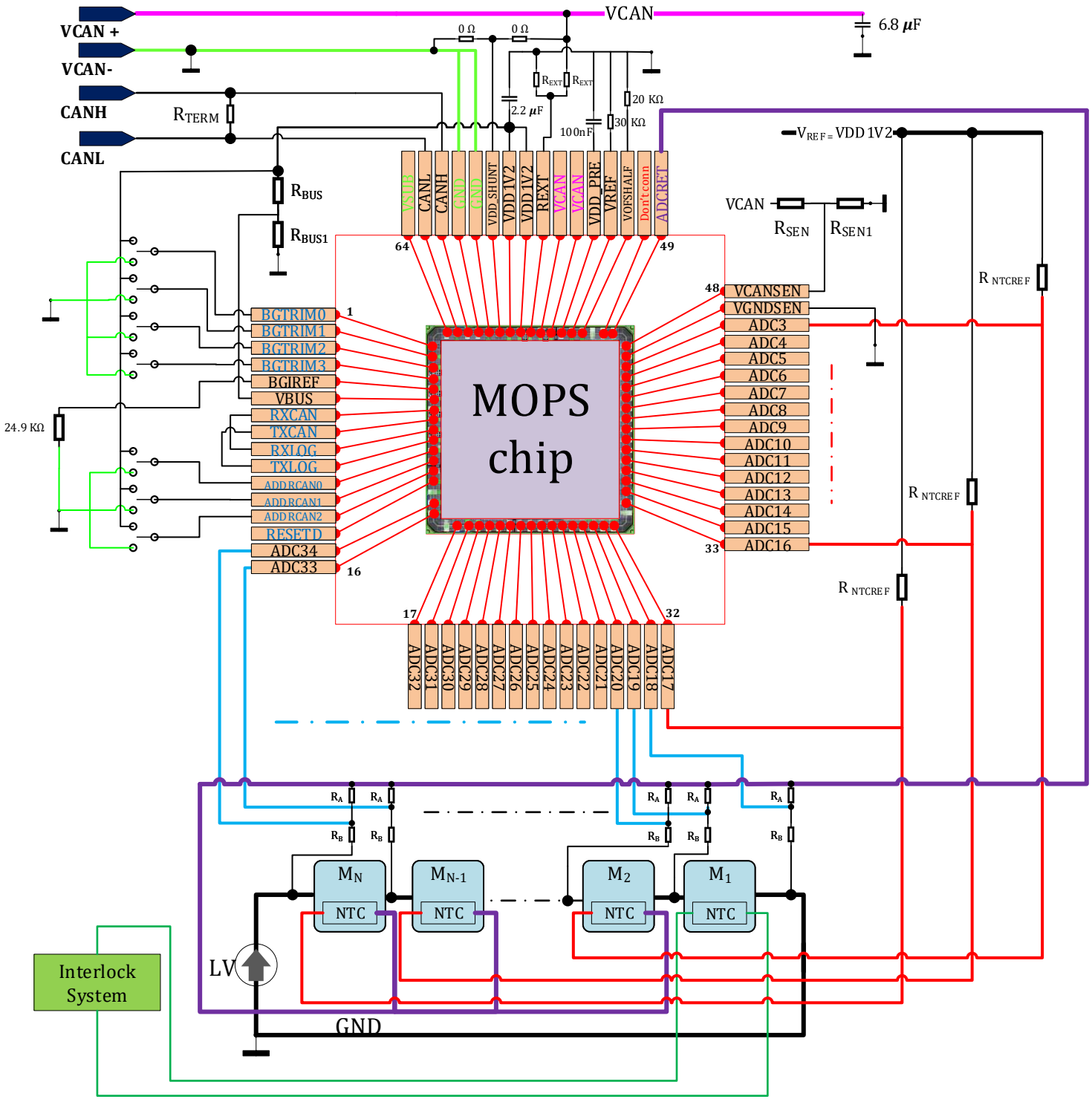

N = Number of modules
Capacitors = 3
Module voltage resistors = 2N +2
NTC Reference resistors = N-1
Bandgap resistor = 1
CAN Resistor = 1
Pull down Resistor/SJ = 2
SPDT switches /SJs = 7
VCAN sense resistors = 2
VBUS resistors = 2
SHULDO resistors = 4

Temperature Monitoring

Voltage Monitoring

Return line

PP0/local ground

Outside connections