CHARGE SENSITIVE PREAMPLIFIER

A250F

Single In-line Package (SIP)

The A250F is a high density version of the Amptek A250 Charge Sensitive Preamplifier. The A250F includes the input FET (IFN152).

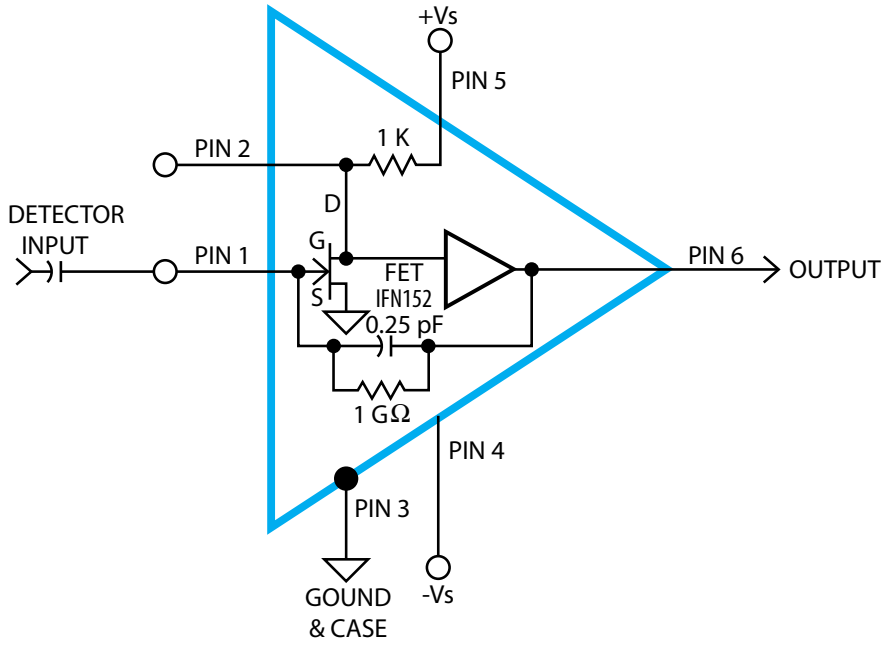

A250F PIN CONFIGURATION

Pin 1	Input
Pin 2	FET Drain
Pin 3	Ground & Case
Pin 4	-Vs (-6 V Typical)
Pin 5	+Vs (+6 V Typical)
Pin 6	Output

NOTES

1. The internal feedback resistor $R_f = 1\ G\Omega$
2. The internal feedback capacitor $C_f = 0.25$ pF
   Sensitivity (gain) = 175 mV//MeV (Si)
   4 V/pC
   0.64 µV/electron
3. For lower sensitivity applications, C_f can be increased externally.
4. The internal 1 kΩ resistor from Pin 2 to Pin 5 provides the FET with a drain current of $I_{DS} = 2.75$ ma. I_{DS} can be increased by adding an external resistor (R < 1 kΩ) from Pin 2 to Pin 5.

Please refer to the A250 specifications for further information.

A250F MECHANICAL DIMENSIONS

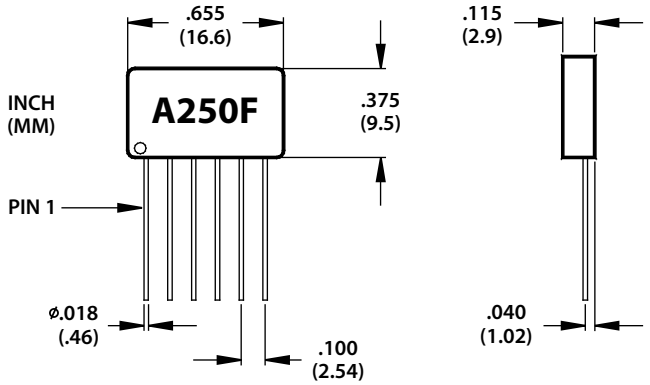

AMPTEK, INC. 14 DeAngelo Drive, Bedford, MA 01730-2204 USA
TEL: +1 (781) 275-2242 FAX: +1 (781) 275-3470 email: sales@amptek.com www.amptek.com