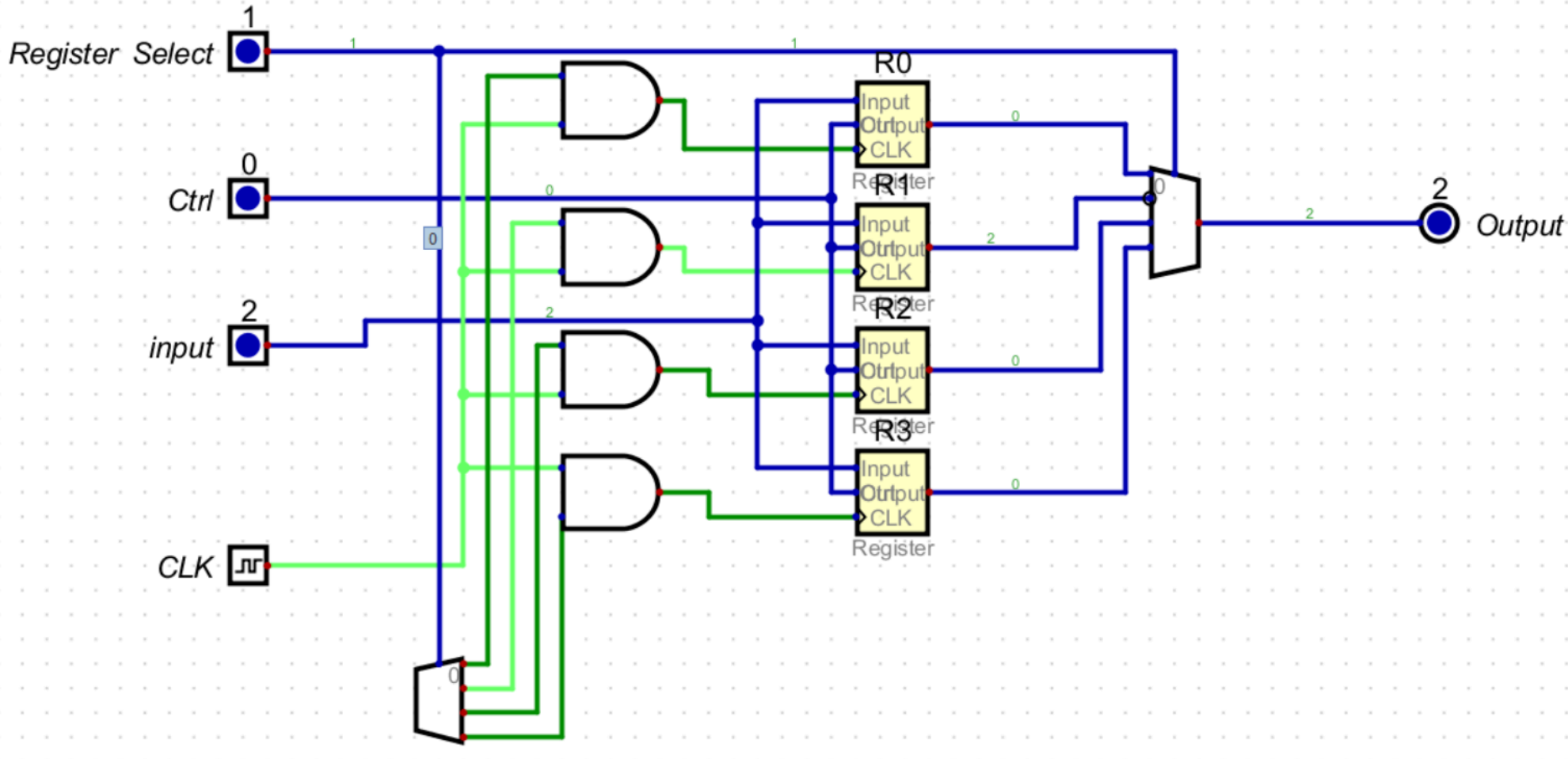
1
Register Select
0
Ctrl
2
input
CLK
R0
Input
Output
CLK
Register
R1
Input
Output
CLK
Register
R2
Input
Output
CLK
Register
R3
Input
Output
CLK
Register
2
Output

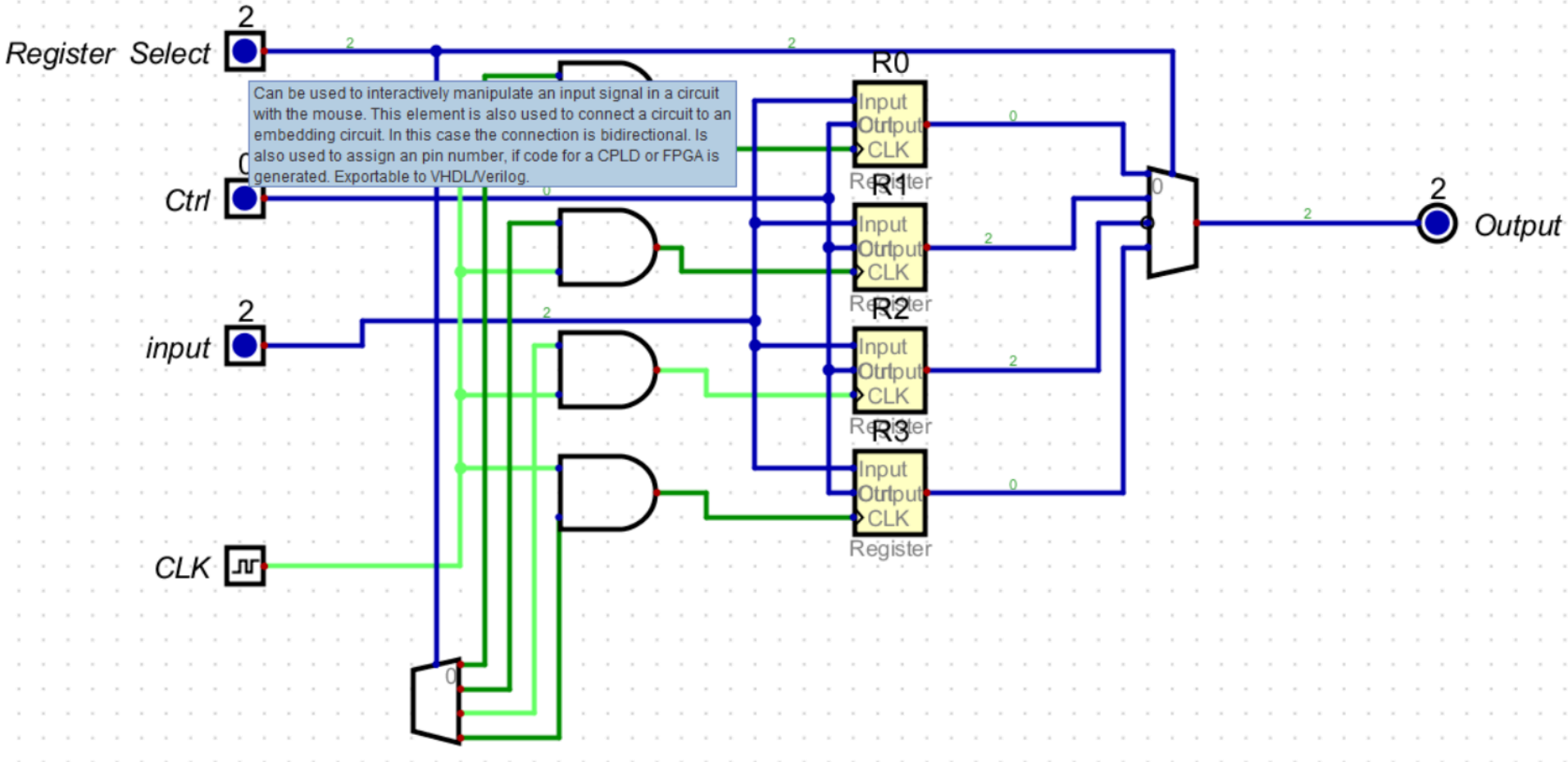
Register Select
2
Can be used to interactively manipulate an input signal in a circuit with the mouse. This element is also used to connect a circuit to an embedding circuit. In this case the connection is bidirectional. Is also used to assign an pin number, if code for a CPLD or FPGA is generated. Exportable to VHDL/Verilog.
Ctrl
input
CLK
R0
R1
R2
R3
Input
Output
CLK
Register
Output

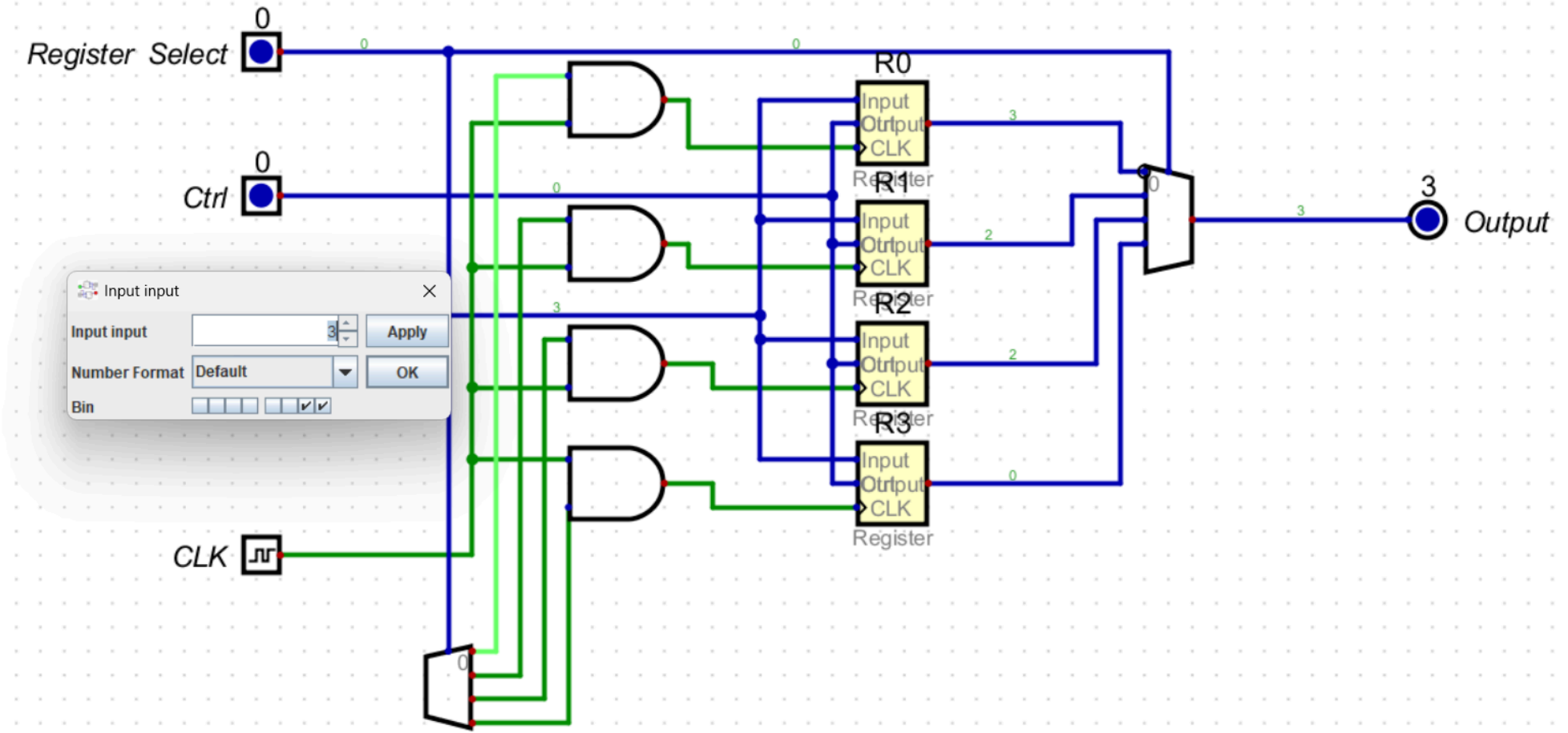
Register Select
0
Ctrl
0
CLK
Input input
Input input
3
Apply
Number Format
Default
OK
Bin
R0
Input
Output
CLK
Register
R1
Input
Output
CLK
Register
R2
Input
Output
CLK
Register
R3
Input
Output
CLK
Register
3
Output

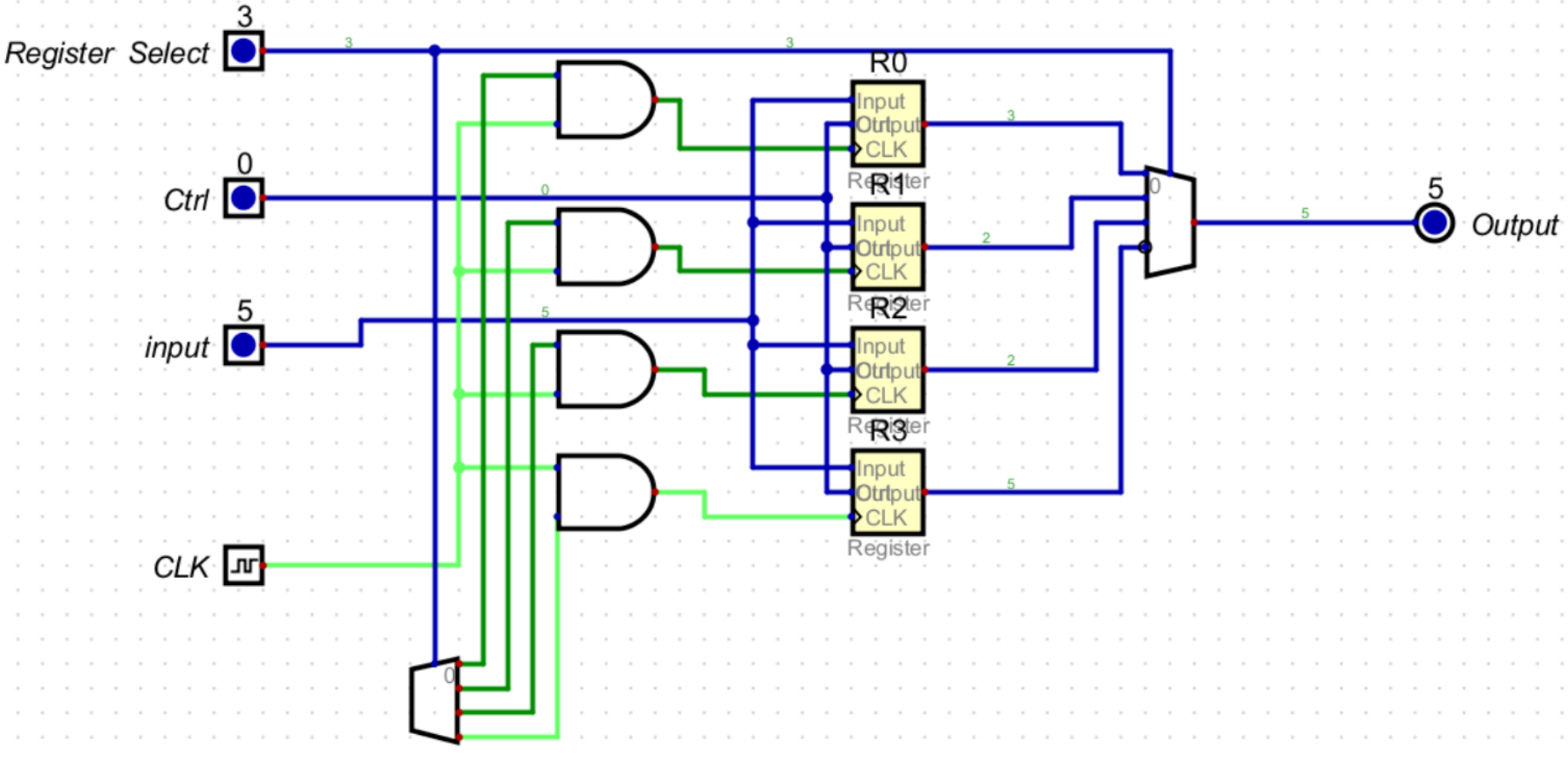
Register Select
3
Ctrl
0
input
5
CLK
R0
R1
R2
R3
Input
Output
CLK
Register
5
Output