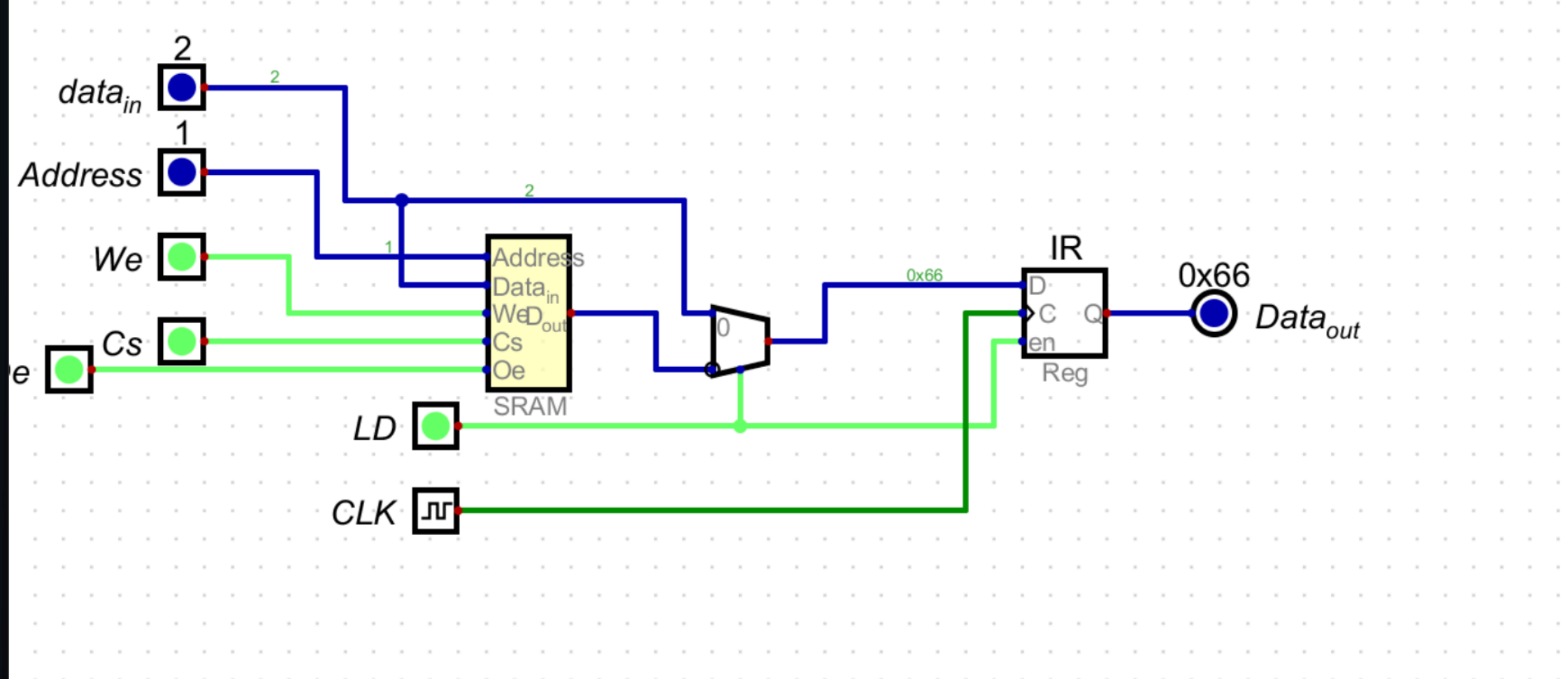
2
data_in
1
Address
We
Cs
e
LD
CLK
2
1
2
Address
Data_in
We
D_out
Cs
Oe
SRAM
0
0x66
IR
D
C
Q
en
Reg
0x66
Data_out

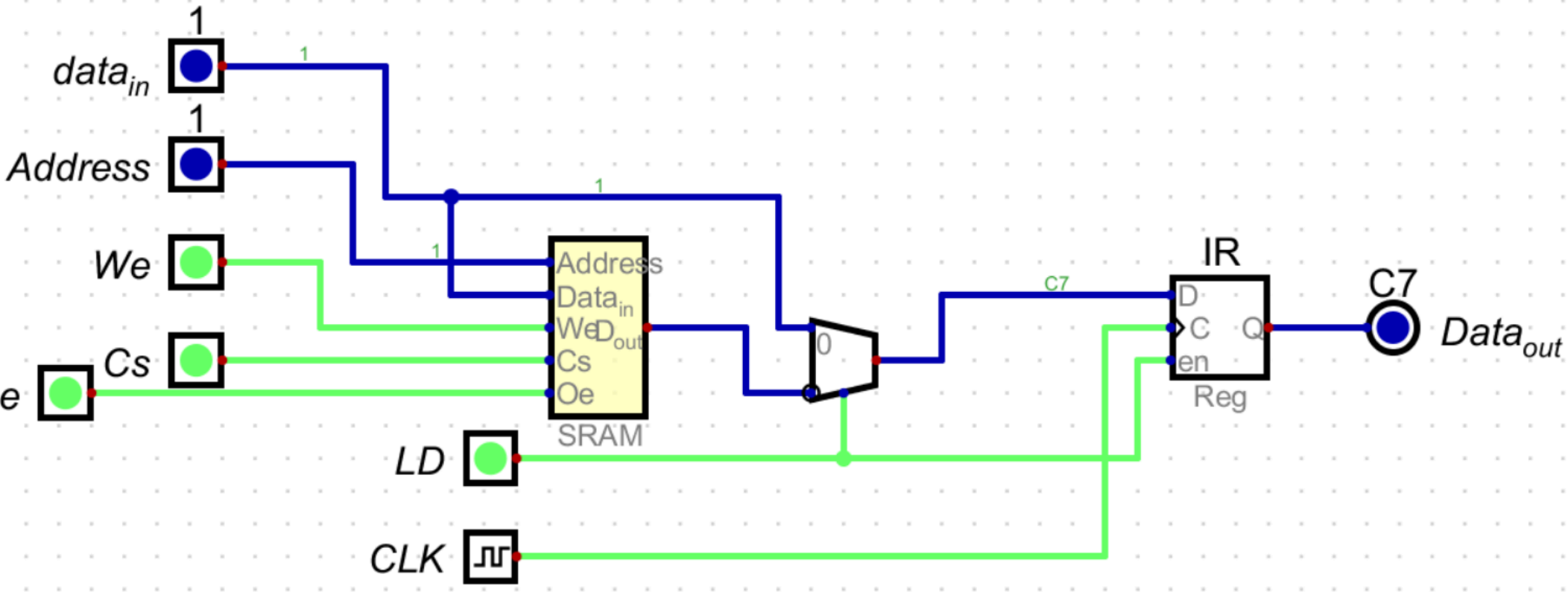
1
data_in
1
Address
We
Cs
e
1
1
1
Address
Data_in
We
D_out
Cs
Oe
SRAM
0
1
C7
IR
D
C
Q
en
Reg
C7
Data_out
LD
CLK