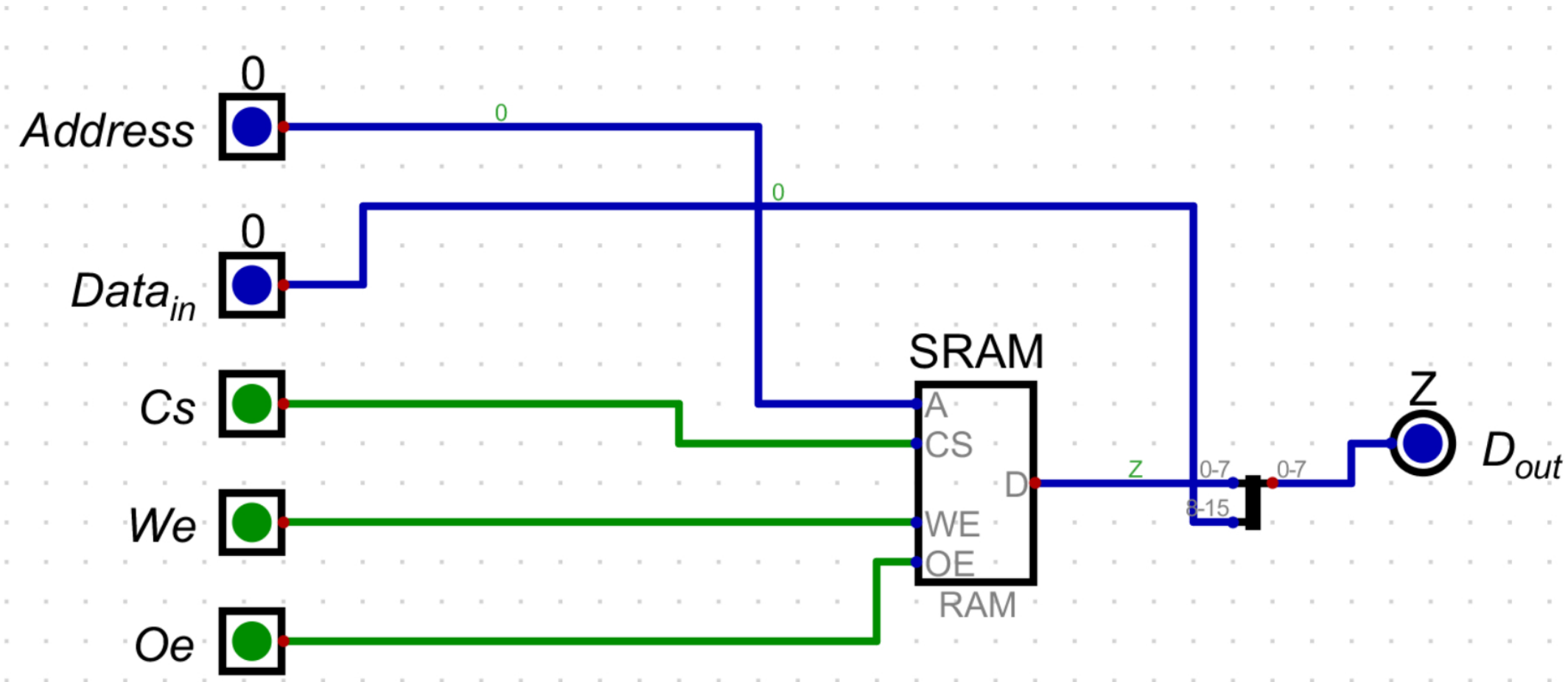
0
Address
0
0
0
Data_in
Cs
We
Oe
SRAM
A
CS
D
WE
OE
RAM
Z
0-7
8-15
0-7
Z
D_out

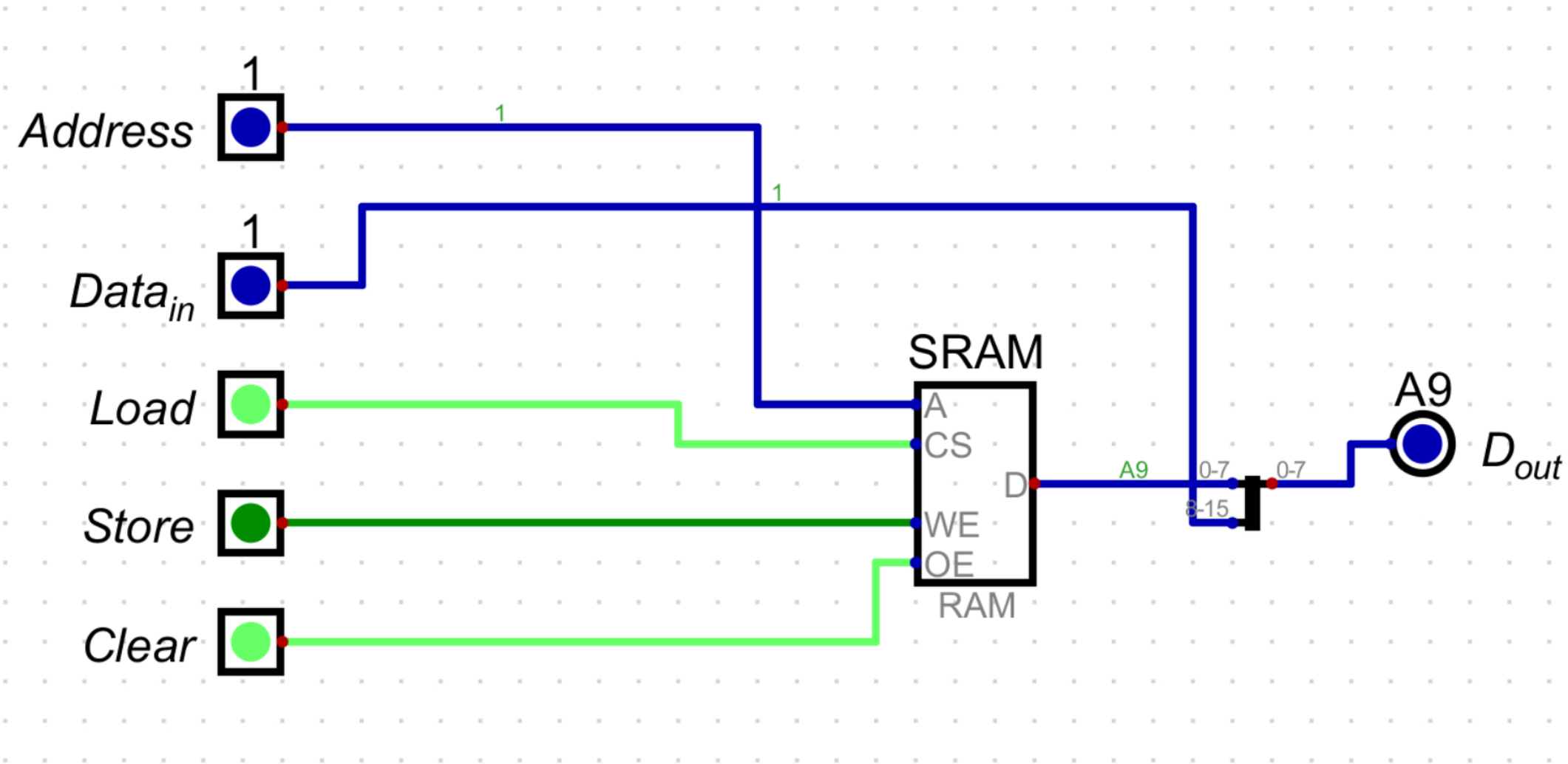
1
Address
1
1
1
Data_in
Load
Store
Clear
SRAM
A
CS
D
WE
OE
RAM
A9
0-7
8-15
0-7
A9
D_out

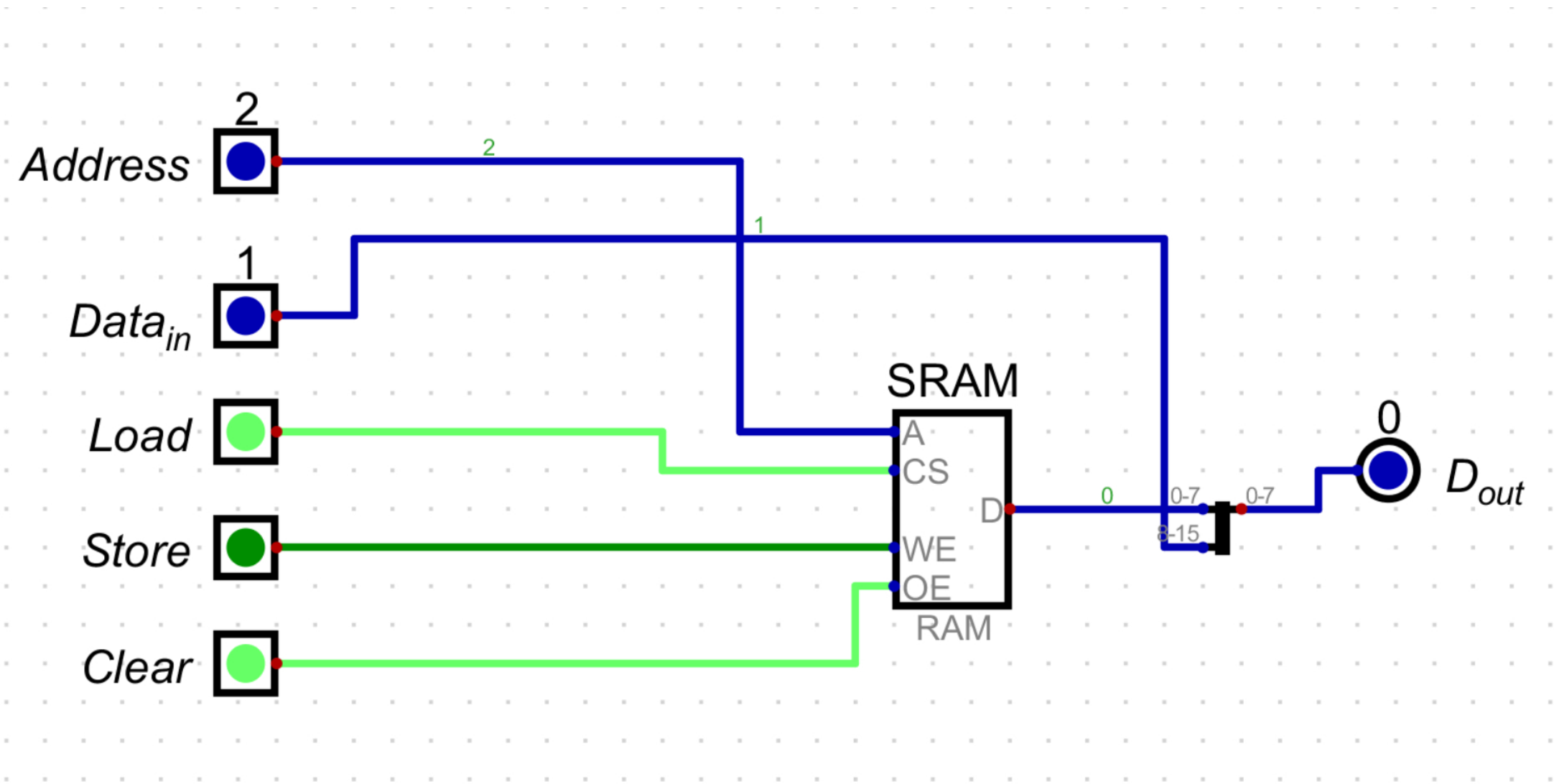
2
Address
1
Data_in
Load
Store
Clear
SRAM
A
CS
D
WE
OE
RAM
2
1
0
0-7
8-15
0-7
0
D_out

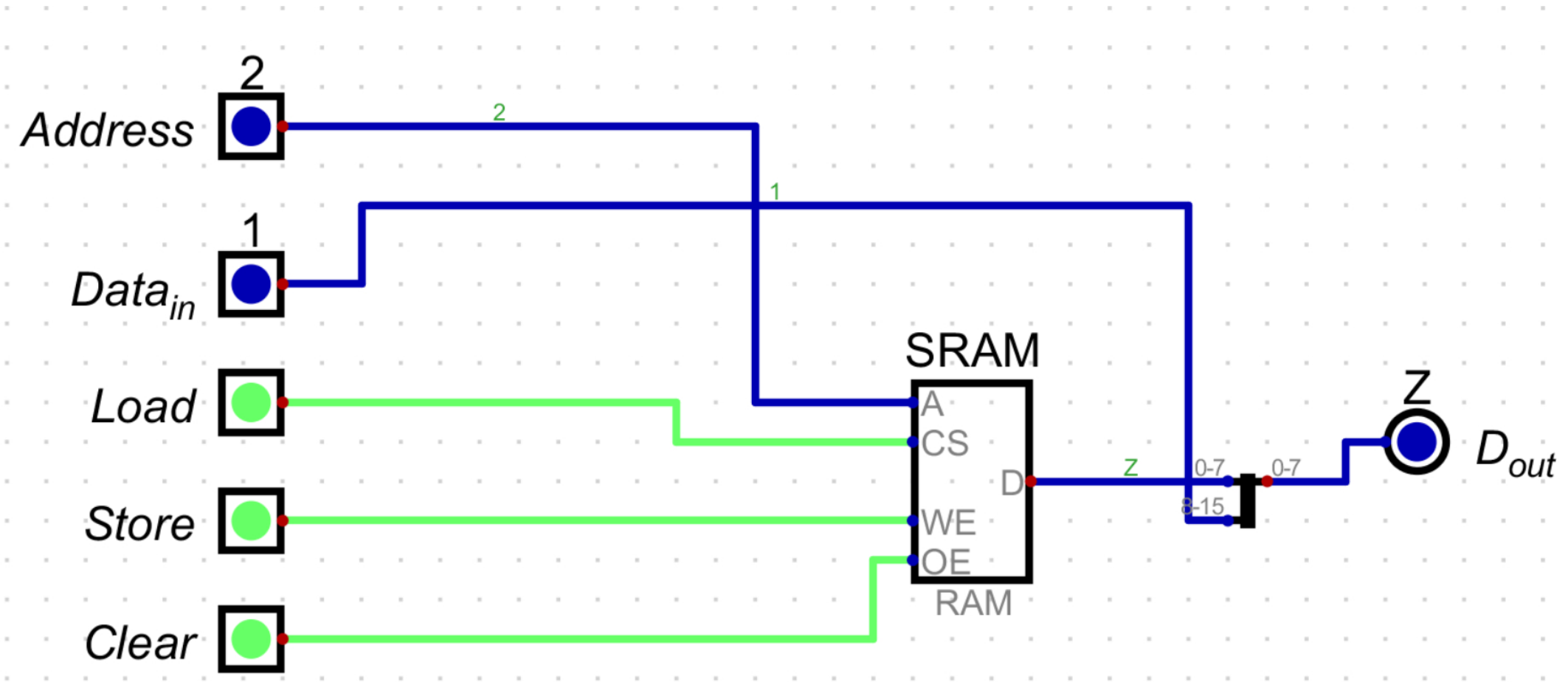
2
Address
2
1
1
Data_in
Load
Store
Clear
SRAM
A
CS
D
WE
OE
RAM
Z
0-7
8-15
0-7
Z
D_out