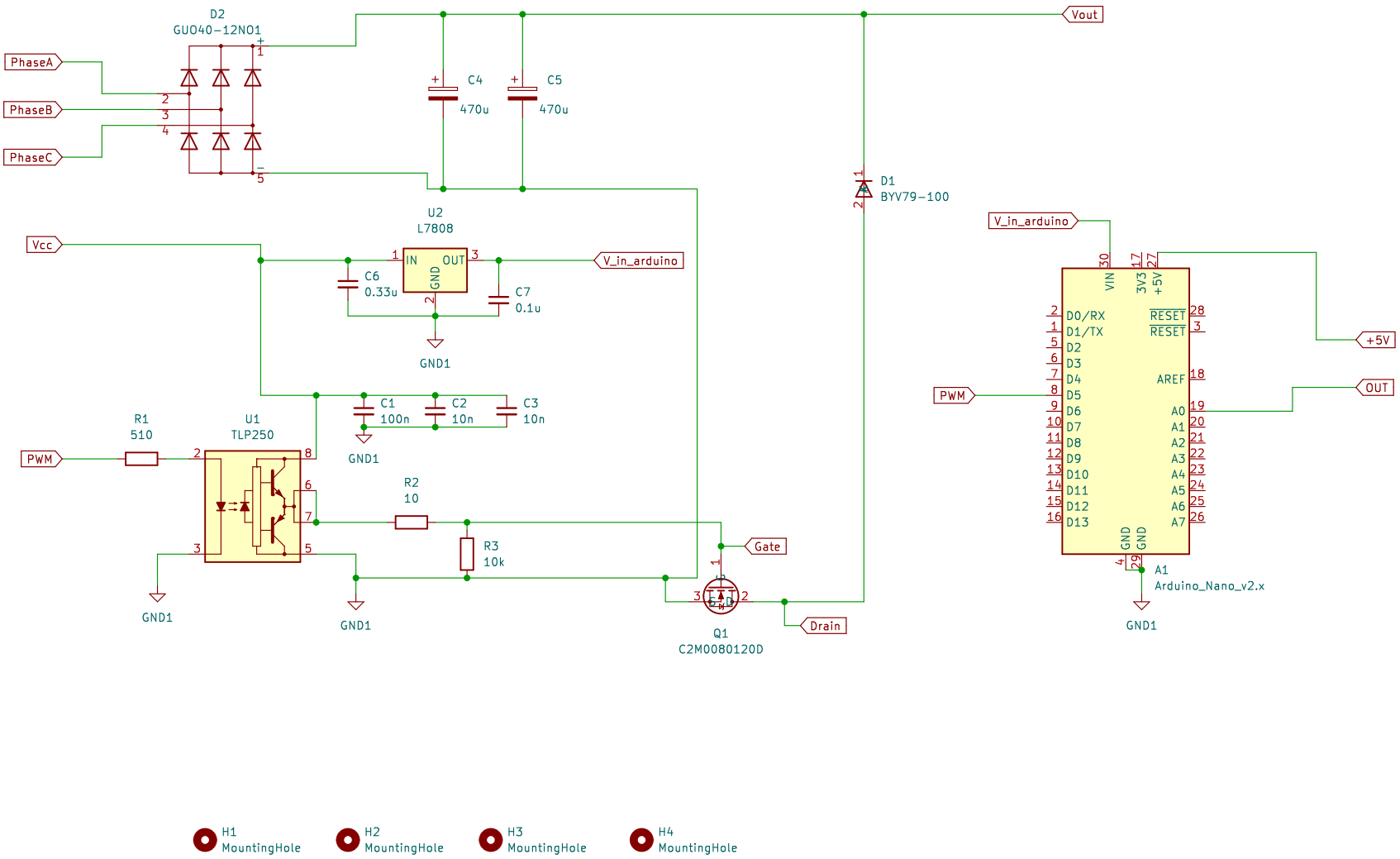

Sheet: /
File: ee463_project.kicad_sch

Title: DC Motor Driver

Size: A4	Date:	**Rev: 2.0**
KiCad E.D.A. kicad (6.0.10)		Id: 1/1