Telekom Deutschland GmbH

24.DE.360908

#Services Item Description#

© Nokia 2022

About Nokia
Nokia invests in technologies important in a world where billions of devices are connected. We are focused on three businesses: network infrastructure software, hardware and services, which we offer through Networks; location intelligence, which we provide through HERE; and advanced technology development and licensing, which we pursue through Technologies. Each of these businesses is a leader in its respective field.

Through Networks, Nokia is the world's specialist in mobile broadband. From the first ever call on GSM, to the first call on LTE, we operate at the forefront of each generation of mobile technology. Our global experts invent the new capabilities our customers need in their networks. We provide the world's most efficient mobile networks, the intelligence to maximize the value of those networks, and the services to make it all work seamlessly. // http://company.nokia.com

Table of Contents

1. P517357 Site survey with video collaboration 9
2. P401514 MN Cross-Dock Management by Subco 10
3. P401496 MN Local Transport. (Transport DOP to Site) 3.5t/16m3 11
4. P401505 MN Delivery by other methods (Reverse Transportation) 12
5. P548916 MN Packing Service 13
6. P401497 MN Local Transport (consolidated take back Service from Subco DOP to CTDI Warehouse) 13
7. P535635 MN Local Transport (basic transport of 1m^3 of Equipment (basic) up to 800 Km) 14
8. P582926 MN Local Transport (additional transport of 1m^3 of Equipment up to 800 Km) 14
9. P535636 MN Local Transport (Forced site move) 15
10. P401507 MN Crane up to 20t 16
11. P401508 MN Crane up to 30t 17
12. P401509 MN Crane up to 45t 18
13. P401510 MN Crane up to 65t 19
14. P401511 MN Crane up to 90t 19
15. P535628 MN Cherry Picker/Boom Lift/EWP up to 20m 20
16. P535629 MN Cherry Picker/Boom Lift/EWP up to 30m 21
17. P535630 MN Cherry Picker/Boom Lift/EWP up to 40m 22
18. P535631 MN Cherry Picker/Boom Lift/EWP up to 50m 23
19. P535633 MN Cherry Picker/Boom Lift/EWP up to ~~60m~~ -> 75m 23
20. P401512 ~~MN Crane above 65t~~ / Cherry Picker up to 90 meters 24
21. P401504 MN Transportation by helicopter 26
22. P534361 S Road closure 27
23. P540636 Travel - 1 person 28
24. P540637 Travel - RAN team. 29
25. P401520 I Flexi BS outdoor cab 30
26. P401529 I AirScale BS system module indoor 31
27. P401537 I AirScale BS capacity unit 33
28. P401547 I BS RRH/RFM 34
29. P401597 I 1-2 RF jumper – Rooftop (6-10m) 37
30. P578372 I 1-2 RF jumper 39
31. P536357 S Earthing connection (pcs) 39

32. P403232 I ODF shelf 40
33. P592195 I FO trunk cable basic - 10m 41
34. P403198 I DC power cable pair <25mm add - 10m 42
35. P548882 ~~P548881~~ HetNet IC FPFH outdoor - pole 43
36. P548880 HetNet IC FPFH indoor 44
37. P441411 I panel antenna up to 2,1m - Tower. 45
38. P443032 I AirScale MAA (active Antenna) 46
39. P517302 Radio Access Testing/Acceptance - Type 2 48
40. P534372 Removal cabinet stand-alone 49
41. P520573 Removal BS Macro System Module 51
42. P520574 Removal RRH, RFM 52
43. P578369 Removal MAA (active Antenna; AAS) 53
44. P454394 Removal omni or panel antenna 54
45. P540638 HetNet Travel Small team (2-3 persons) 54
46. P519824 I HetNet AirScale BS system module 55
47. P394545 ICIntg AirScale Micro RRH 56
48. P441403 InstM AirScale Micro RRH DC 57
49. P548876 I HetNet street antenna 58
50. P534384 HetNet Call testing silver 59
51. P454355 Removal SmallCell AP-BS 60
52. P537816 TI RAN Inst Extra Work Small WP add closing of fire bulkhead (without travel) 61
53. P403100 Extended work hour(s) – Installer Night shift surcharge / Team 63
~~54. P575405 I Antenna Ancillaries – Tower~~ 64
55. P578354 Removal Antenna Ancillaries 65
56. P519833 ~~P534520~~ I 1-2 antenna line pair – first 5m 65
57. P519834 ~~P534522~~ I 1-2 antenna line pair add - 1m 66
58. P401619 ~~P534528~~ I 7-8 antenna line pair – first 5m 66
59. P578378 ~~P534530~~ I 7-8 antenna line pair add - 1m 66
60. P578385 ~~P534536~~ I 1 1-4 antenna line pair - first 5m 67
61. P578387 ~~P534538~~ I 1 1-4 antenna line pair add - 1m 67
62. P401635 ~~P534544~~ I 1 5-8 antenna line pair - first 5m 69
63. P578384 ~~P534546~~ I 1 5-8 antenna line pair add - 1m 69
~~64. P578805 Removal ant. line 2 1-4 up to 10m - Tower~~ 70
65. P534371 Removal RF cabling pair stand-alone (Feeder dismantling > 10m (lump sum per site) 70

66. P394858 S Grounding bar 71
67. P394893 S Circuit Breaker 72
68. P403186 I FO cable add - 10m 73
69. P520589 IC energy work package type 2 74
70. P520591 Removal of energy solution 75
~~71. P536433 S Lightning Protection system (lot)~~ 76

Detailed scope of work description from DT missing 76

~~72. P536434 M Lightning Protection system (lot)~~ 77

Detailed scope of work description from DT missing 77

73. P544126 S Cable Tray small (m) 78
74. P544127 M Cable Tray small (m) 79
75. P544178 S Base plate 80
76. P544179 M Base plate (lot) 81
77. P544220 M Circuit breaker Type 1, xsmall (pcs) 82
78. P544246 M Earthing plate, Type 1 (pcs) 83
79. P401641 Painting antenna panel 84
80. P394929 S Bracket for RRH/RF modules (RRH – holder) 85
81. P410848 ~~P519830~~ I combiner 86
82. P517303 Radio Controller Installation (BSC/RNC) 87
83. P454358 Removal controller cabinet 89
84. P395208 M antenna bracket 90
85. P401503 MN Transportation vehicle on ferry 91
86. P395202 M Antenna mount 92
87. P395100 S Antenna bracket 93
88. P544135 S Cable Tray medium (pcs) 94
89. P544136 M Cable Tray medium A - Type 1 (pcs) 95
90. P544265 TI RAN Inst Extra Work Mini WP add type2 “onsite HF VSWR/ RL Measurements per site” 95
91. P544264 TI RAN Inst Extra Work Mini WP add type1 “Onsite PIM measurements.” 96
92. P403107 Site Security 97
93. P394690 Existing RT Tower strength analysis (Windload comparison) 98
94. P394981 M Adaptor frame 99
95. P394923 S Adaptor frame 99
96. P454389 Removal battery string 48V up to 150 Ah 100

97. P534370 Removal power-transm cabling stand-alone..... 100
98. P454399 Removal transmission cable up to 10m (max. 6 cables) 101
99. P454400 Removal power cable <25mm^2 up to 10m 102
100. P395251 S Free standing antenna support under 2m..... 102
101. P395287 M Free standing antenna support under 3m 103
102. P578360 Removal antenna line jumper - Tower 104
103. P534367 TI RAN Rigging Extra Work Small WP basic. (feeder cut) 105
104. P544266 TI RAN Inst Extra Work Mini WP add type3..... 106
105. P534366 TI RAN Inst Extra Work Small WP basic..... 108
106. P377724 Site Survey remote (desktop study)..... 110
107. P394665 "Site Survey full scope 111
108. P454395 Removal Antenna Ancillaries (lump sum per site) 112
109. P534369 TI ES Inst Extra Work Small WP basic (I Flexi BS power module) 113
110. P401524 InstM Flexi BS outdoor cab compact 114
111. P544267 TI RAN Rigging Extra Work Mini WP add (Dismantling of all multimode FO)..... 114
112. P520584 Xhaul Local Link Acceptance per site (quality check) .. 115
113. P568121 Pre-build special procedure (SMC BBU exchange 116
114. P568115 Pre-build Installation Radio (SMC RRH exchange..... 117
115. P568118 Pre-build Installation Antenna (SMC Jumper/transmission cable exchange 118

Free climber efforts must be included with an % share in all relevant items !

General

Prerequisites

The bidder should read this SID document in conjunction with all other associated documents issued as part of this RfQ, including but not limited to;1) BOQs/Model Site Packages.2) Scope of Work.3) Statement of Compliance.4) CW Specifications.5) Tender Drawings.6) Share of Responsibility, Service Level Agreement & Key Performance IndicatorsAny discrepency among different documents should be reported back to Nokia prior to bidding.

The items specified in this document shall include all Materials and Services needed to comply with the requirements stated in this RfQ and activities needed to execute that item.

The bidder shall supply all required labor, tools, equipment, inspection testing and services necessary for the complete works in full conformity of requirements stipulated within this RfQ.

Any additional item or scope deemed necessary by bidder to complete the stipulated RfQ requirements, and not part of this document and RfQ, shall be reported back to Nokia.

Any assumption deemed necessary by bidder, to respond to Nokia RfQ, should be reported to Nokia prior to bidding for validation.Any exclusions to the required scope, in the offer by bidder, should be clearly stated in the RfQ response.

The bidder shall carry out CW scope and associated services in accordance with the local regulations and/or international standards as well as telecommunications industry. The adherence to local construction standards in addition to specific customer requirements is mandatory.

To perform the CW and associated activities, the bidder shall arrange and be responsible for:1) All travel & transportation needed for activities against each item including boarding/lodging of manpower.2) Site mobilization/demobilization.3) The machinery to be used (excavator/JCB, boom trucks/Crane/Gin pole, ready mixed concrete transported to site,...etc).4) Performing all construction works needed to construct a site in accordance with the detailed site design.

5) Site management/supervision (preparation and coordination of site activities, supervision of construction works, progress reporting).6) Health & Safety + Quality control procedures and arrangements during site construction.7) Site guardian and security arrangements.8) Disposing of all debris following construction, adhering to local regulation & health and safety procedures.9) On-site CW acceptance & submission of all CW related site specific documentation (complete Site Folder), in accordance with the agreed site acceptance procedure.

Subcontractor shall be responsible for Site Access & co-ordinate works with all other trades and specialist to ensure that all of their requirements are integrated seamlessly into the overall execution of the total works.

Subcontractor is required to perform all the works as per Nokia quality standards and this can be requested to be checked by Nokia at any time, remotely or on-site.

Subcontractor needs to have a mobile phone with enough data subscription to be able to perform video calls, or provide high resolution photos.

NDPc checklist as per Nokia standards and customer specific requirements should be used for that purpose.

Nokia can perform quality audit or health & safety checks during the onsite activities. The objective is to improve quality and H&S behaviours that will allow to achieve a faster acceptance timeline.

The duration of the quality audit or health & safety will be as necessary to reach Nokia quality standards and customer specific requirements.

1. P517357 Site survey with video collaboration

NI-G-SL20101

Bill of Quantities

<table>
<tr><th>Pos</th><th>Task/Material</th><th>Qnt</th><th>Unit</th><th>Component</th><th>Remark</th></tr>
<tr><td>1</td><td>Establish remote connection to Nokia TSS team via NDPc video collaborator.</td><td>1</td><td>pcs</td><td></td><td></td></tr>
<tr><td>2</td><td>Conduct a Technical Site Survey on a site using Nokia NDPc video collaborator. Follow instruction given by Nokia TSS team and capture all photos/video recordings requested by Nokia TSS team.</td><td>1</td><td>pcs</td><td></td><td>Nokia TSS team will guide the local representative through the entire TSS.
Assumed average duration:
• Roof-top 3 hours
• Tower 4 hours
Consolidation of inputs and report creation will be done by Nokia TSS team</td></tr>
<tr><td></td><td></td><td></td><td></td><td></td><td>Travel cost to site is <u>included</u> in this item!
Nokia will assign a list of sites in a cluster, that travel time can be minimized.
The labelling (warning labels) of the controllable area shall be checked during this TSS
Also it needs to be checked, whether the situation at site allows the planned equipment to be placed at the dedicated location (measuring whether equipment fits)
Analysis whether cherry pickers are needed for antenna maintenance and installation.

BeispielStempel für Blatt 6 als Ergebnis des Aufbaus, bitte Gradzahlen HSR eintragen):
<table><tr><th colspan="2">Sektor</th><th>x°</th><th>y°</th><th>z°</th></tr><tr><td colspan="2">mechanische Absenkung passive Antenne</td><td>0°</td><td>0°</td><td>0°</td></tr><tr><td colspan="2">mechanische Absenkung aktive Antenne</td><td>0°</td><td>2°</td><td>0°</td></tr><tr><td rowspan="3">Zur Wartung Hubsteiger erforderlich !</td><td>aktive Antenne</td><td>Nein</td><td>Nein</td><td>Nein</td></tr><tr><td>passive Antenne</td><td>Nein</td><td>Nein</td><td>Nein</td></tr><tr><td>abgesetztes Radio-Modul</td><td>Nein</td><td>Nein</td><td>Nein</td></tr></table></td></tr>
</table>

- TSS= “Technical Site Survey”

2. P401514 MN Cross-Dock Management by Subco

NI-G-SL91901

Bill of Quantities

Pos	Task/Material	Qnt	Unit	Component	Remark
1	Services for managing box-in/box-out deliveries only. Aiming to optimize a storage time and improved the delivery to site. Performed in a facility either in Warehouse with 3rd party providers (subcontractors). The facility should be in a strategic location near to the installation zones.	1	site		Lump sum for Cross Dock management per site. ~~Nokia Euqipment, Raycap, Fujitsu and Installation Material have to be consolidated.~~ **Site based delivery from Nokia central hub including (Nokia, Fujitsu Equipment, Raycap and installation material)** Regular Inventory (Nokia stasndard report) have to be send to Nokia. **Passive Antennas; (different shipment) Cross- Dock Management efforts are not part of this item -> have to be included in order item P441411 antenna installation)**

3. P401496 MN Local Transport. (Transport DOP to Site) 3.5t/16m3

NI-G-SL91001

Bill of Quantities

Pos	Task/Material	Qnt	Unit	Component	Remark
1	Customer equipment and installation materials transportation by road from one place to another with flexibility for different routes and destinations. Standard vehicle with a payload carrying capacity up to 3.5 tons.	1	pcs		Carrying or moving cargo from the storage area and loading of the cargo onto the vehicle as described below. Transportation of tools, materials or equipment in a truck/lorry with the payload capacity up to 3,5 tons for an initial distance from the storage area to site Carrying or moving the cargo from the vehicle into the equipment room, battery room, rooftop or other designated area at the site, or in case of removal, into the storage area. Insurance of the persons, vehicle, tools, materials and equipment within the scope of agreed Services. **(passive Antennas transport DOP -> site efforts are not part of this item -> have to be included in order item P441411 antenna installation)**

4. P401505 MN Delivery by other methods (Reverse Transportation)

NI-G-SL91109

Bill of Quantities

Pos	Task/Material	Qnt	Unit	Component	Remark
1	Carrying or moving cargo from, designated area at the site, and loading of the cargo onto the vehicle as described below. Transportation of equipment in a truck/lorry with the payload capacity up to 3,5 tons from site to supplier storage area. Carrying or moving the cargo from the vehicle into the supplier storage area.	1	pcs		For logistic tracking this Service Item also covers the following tasks: - download & check existing site inventory file (par-file) - attach file to the site folder / NDPd. - Label the site package according to requirements and add a packing slip. Insurance of the persons, vehicle, tools, materials and equipment within the scope of agreed Services. Removed equipment shall be handled in a way that it can be re-used (packaging).
2	Provide operational management of dismantled goods in a warehouse or Drop Off Point. This includes: Goods receivable including checking for any damages during transportation. Storing of the goods as agreed between Customer and Nokia (per site or per network element). Regular stock takes and reporting of deviations	1	pcs		This service item covers intermediate storage of dismantled legacy equipment for later relocation for a limited period of time. Service can be ordered up to the defined max. time frame of 12 weeks (average 4-6 weeks).

5. P548916 MN Packing Service

NI-G-SL91301

Bill of Quantities

Pos	Task/Material	Qnt	Unit	Component	Remark
1	Packing of deinstalled equipment, for its protection during handling and/or transportation. It must include the packing material (carton, wood, wrapping, etc.) and filling e.g.: crumpler paper, etc. if required.	1	Site		

6. P401497 MN Local Transport (consolidated take back Service from Subco DOP to CTDI Warehouse)

Bill of Quantities

Pos	Task/Material	Qnt	Unit	Component	Remark
1	Consolidated take back Service from Subco DOP to CTDI Warehouse Malsch. **(Transport of legacy equipment CTDI warehouse in Malsch / Karlsruhe).**	1	site		Insurance of the persons, vehicle, tools, materials and equipment within the scope of agreed Services.site (order will be per site even mutiple sites could transported by one truck; e.g. equipment of 2-3 weeks can be combined to one return)
2	logistic tracking Service incl. CTDI "paper handling"	1	site		

7. P535635 MN Local Transport (basic transport of 1m^3 of Equipment (basic) up to 800 Km)

Bill of Quantities

Pos	Task/Material	Qnt	Unit	Component	Remark
1	Customer equipment and installation materials transportation by road from one place to another with flexibility for different routes and destinations. Optional Service for Transport: basic transport of 1m3 of Equipment (basic) up to 800 Km	1	1m^3 / 800km		Insurance of the persons, vehicle, tools, materials and equipment within the scope of agreed Services.site Optional item for on-demand activities. Not for use during "standard" rollout or swap **Additional Rollout Service for Transport: basic transport of 1m3 of Equipment (basic) up to 800 Km**
2	logistic tracking Service incl. CTDI "paper handling"	1	pcs		

8. P582926 MN Local Transport (additional transport of 1m^3 of Equipment up to 800 Km)

Bill of Quantities

Pos	Task/Material	Qnt	Unit	Component	Remark
1	Customer equipment and installation materials transportation by road from one place to another with flexibility for different routes and destinations.. Optional Service for Transport: additional transport of 1m^3 of Equipment up to 800	1	1m3 / 800km		orered together with P535635 basic order item Optional item for on-demand activities. Not for use during "standard" rollout or swap Additional Rollout Service for Transport: additional transport of 1m3 of Equipment up to 800 Km

9. P535636 MN Local Transport (Forced site move)

Bill of Quantities

Pos	Task/Material	Qnt	Unit	Component	Remark
1	Customer equipment and installation materials transportation by road from one place to another with flexibility for different routes and destinations. Standard vehicle with a payload carrying capacity up to 3.5 tons.	1	site		Carrying or moving cargo from the legacy DT site to the new DT site inside Germany (>5 km; within designated Nokia rollout area)

Forced Site Move (FSM): In case of Forced Site Move the Equipment of Site A is transported to Site B and will be rebuilt on Site B.

10. P401507 MN Crane up to 20t

NI-G-SL91202

Bill of Quantities

Pos	Task/Material	Qnt	Unit	Component	Remark
1	A device or vehicle for lifting and moving heavy objects vertically and horizontally in roof top buildings or other structures with Crane Operator Certificate, Rigger Certificate, Rigging Certificate, Permit Step Mobility, Control Mobility (if apply), Tort Liability Policy, Site Coordinator, Previous Site Visit, Procedure for issuance of each access permit. Includes transportation of crane, to and from the site. Lifting capacity up to 20 tons / telescoping boom up to 18m.	1	per site		per site

11. P401508 MN Crane up to 30t

NI-G-SL91203

Bill of Quantities

Pos	Task/Material	Qnt	Unit	Component	Remark
1	A device or vehicle for lifting and moving heavy objects vertically and horizontally in roof top buildings or other structures with Crane Operator Certificate, Rigger Certificate, Rigging Certificate, Permit Step Mobility, Control Mobility (if apply), Tort Liability Policy, Site Coordinator, Previous Site Visit, Procedure for issuance of each access permit. Includes transportation of crane, to and from the site. Lifting capacity up to 30 tons / telescoping boom up to 25m.	1	per site		per site

12. P401509 MN Crane up to 45t

NI-G-SL91204

Bill of Quantities

Pos	Task/Material	Qnt	Unit	Component	Remark
1	A device or vehicle for lifting and moving heavy objects vertically and horizontally in roof top buildings or other structures with Crane Operator Certificate, Rigger Certificate, Rigging Certificate, Permit Step Mobility, Control Mobility (if apply), Tort Liability Policy, Site Coordinator, Previous Site Visit, Procedure for issuance of each access permit. Includes transportation of crane, to and from the site. Lifting capacity up to 45 tons / telescoping boom up to 35m.	1	per site		per site

13. P401510 MN Crane up to 65t

NI-G-SL91205

Bill of Quantities

Pos	Task/Material	Qnt	Unit	Component	Remark
1	A device or vehicle for lifting and moving heavy objects vertically and horizontally in roof top buildings or other structures with Crane Operator Certificate, Rigger Certificate, Rigging Certificate, Permit Step Mobility, Control Mobility (if apply), Tort Liability Policy, Site Coordinator, Previous Site Visit, Procedure for issuance of each access permit. Includes transportation of crane, to and from the site. Lifting capacity up to 65 tons telescoping boom up to 48m.	1	per site		per site

14. P401511 MN Crane up to 90t

NI-G-SL91206

Bill of Quantities

Pos	Task/Material	Qnt	Unit	Component	Remark
1	A device or vehicle for lifting and moving heavy objects vertically and horizontally in roof top buildings or other structures with Crane Operator Certificate, Rigger Certificate, Rigging Certificate, Permit Step Mobility, Control Mobility (if apply), Tort Liability Policy, Site Coordinator, Previous Site Visit, Procedure for issuance of each access permit. Includes transportation of crane, to and from the site. Lifting capacity up to 90 tons telescoping boom up to 48m.	1	per site		per site

15. P535628 MN Cherry Picker/Boom Lift/EWP up to 20m

NI-G-SL91221

Bill of Quantities

Pos	Task/Material	Qnt	Unit	Component	Remark
1	A device or vehicle for people/material/equipment hoisting vertically (Cherry-Picker/Boom Lift/EWP) with Operator Certificate, Rigger Certificate, Rigging Certificate, Permit Step Mobility, Control Mobility (if apply), Tort Liability Policy, Site Coordinator, Previous Site Visit, Procedure for issuance of each access permit. Includes transportation of crane, to and from the site. Range up to 20 meters.	1	per site		per site

16. P535629 MN Cherry Picker/Boom Lift/EWP up to 30m

NI-G-SL91222

Bill of Quantities

Pos	Task/Material	Qnt	Unit	Component	Remark
1	A device or vehicle for people/material/equipment hoisting vertically (Cherry-Picker/Boom Lift/EWP) with Operator Certificate, Rigger Certificate, Rigging Certificate, Permit Step Mobility, Control Mobility (if apply), Tort Liability Policy, Site Coordinator, Previous Site Visit, Procedure for issuance of each access permit. Includes transportation of crane, to and from the site. Range up to 30 meters.	1	per site		per site

17. P535630 MN Cherry Picker/Boom Lift/EWP up to 40m

NI-G-SL91223

Bill of Quantities

Pos	Task/Material	Qnt	Unit	Component	Remark
1	A device or vehicle for people/material/equipment hoisting vertically (Cherry-Picker/Boom Lift/EWP) with Operator Certificate, Rigger Certificate, Rigging Certificate, Permit Step Mobility, Control Mobility (if apply), Tort Liability Policy, Site Coordinator, Previous Site Visit, Procedure for issuance of each access permit. Includes transportation of crane, to and from the site. Range **up to 40** meters.	1	per site		per site

18. P535631 MN Cherry Picker/Boom Lift/EWP up to 50m

NI-G-SL91224

Bill of Quantities

Pos	Task/Material	Qnt	Unit	Component	Remark
1	A device or vehicle for people/material/equipment hoisting vertically (Cherry-Picker/Boom Lift/EWP) with Operator Certificate, Rigger Certificate, Rigging Certificate, Permit Step Mobility, Control Mobility (if apply), Tort Liability Policy, Site Coordinator, Previous Site Visit, Procedure for issuance of each access permit. Includes transportation of crane, to and from the site. Range **up to 50m** meters.	1	per site		per site

19. P535633 MN Cherry Picker/Boom Lift/EWP up to ~~60m~~ -> 75m

NI-G-SL91225

Bill of Quantities

Pos	Task/Material	Qnt	Unit	Component	Remark
1	A device or vehicle for people/material/equipment hoisting vertically (Cherry-Picker/Boom Lift/EWP) with Operator Certificate, Rigger Certificate, Rigging Certificate, Permit Step Mobility, Control Mobility (if apply), Tort Liability Policy, Site Coordinator, Previous Site Visit, Procedure for issuance of each access permit. Includes transportation of crane, to and from the site. Range **up to 75m** meters.	1	per site		per site

20. P401512 ~~MN Crane above 65t~~ / Cherry Picker up to 90 meters

NI-G-SL911207

Bill of Quantities

Pos	Task/Material	Qnt	Unit	Component	Remark
1	A device or vehicle for people/material/equipment hoisting vertically (Cherry-Picker/Boom Lift/EWP) with Operator Certificate, Rigger Certificate, Rigging Certificate, Permit Step Mobility, Control Mobility (if apply), Tort Liability Policy, Site Coordinator, Previous Site Visit, Procedure for issuance of each access permit. Includes transportation of crane, to and from the site. Range **up to 90m** meters.	1	per site		per site

21. P401504 MN Transportation by helicopter

NI-G-SL91103

Bill of Quantities

Pos	Task/Material	Qnt	Unit	Component	Remark
1	Used for moving and facilitate the delivery of the Customer equipment, installation material, tools, and personnel to the final delivery site, overcoming the logistics challenges due access conditions on the site or zone of delivery with an aircraft that is lifted and propelled by one or more large horizontal rotors.	1	per day		Generally, there are three types of helicopters such as Hughes, Lecutierres and MI 17A.

22. P534361 S Road closure

NI-G-SL46071

Bill of Quantities

Pos	Task/Material	Qnt	Unit	Component	Remark
1	Road closure during installation work	1	pcs		
2	Design temporary trafic solution (if applicable)	1	pcs		
3	Collect permits / authorizations . from the local authorities for deployment of a crane or work-lift on the site.	1	pcs		
4	Payment of the fees for road closure	1	pcs		
5	Traffic and safety arrangements on the site	1	pcs		

23. P540636 Travel - 1 person

NI-G-SL50031

Bill of Quantities

Pos	Task/Material	Qnt	Unit	Component	Remark
1	Travel of one person by car (station wagon, MPV, or off-road SUV), train or other means needed for the person to get to the site.	1	lot		Roundtrip. Travel time cost of one person including accommodation if overnight stay is needed as long as required for completing the agreed tasks in the sales package. **Also used as travel cost uplift for single site / day activity**
2	Transportation of tools, materials or/and equipment in the same car up to the capacity of the trunk or carrying capacity of the person and moving of the transported tools, materials or equipment onto and from the site (equipment room, battery room, rooftop, or any other part of the site).	1	lot		
3	Insurance of the person, vehicles, tools, materials and equipment within the scope of the agreed services.	1	lot		

24. P540637 Travel - RAN team.

NI-G-SL50032

Bill of Quantities

Pos	Task/Material	Qnt	Unit	Component	Remark
1	Travel of a RAN team by car (station wagon, MPV, or off-road SUV), train or other means needed for the persons to get to the site.	1	lot		Roundtrip. Travel time cost of the persons including accommodation if overnight stay is needed as long as required for completing the agreed tasks in the sales package. **Additional cost for Island sites will covered withhin order item P401503 MN Transportation vehicle on ferry (have to be excluded in this item)**
2	Transportation of tools, materials or/and equipment in the same car up to the capacity of the trunk or carrying capacity of the persons and moving of the transported tools, materials or equipment onto and from the site (equipment room, battery room, rooftop, or any other part of the site).	1	lot		
3	Insurance of the person, vehicles, tools, materials and equipment within the scope of the agreed services.	1	lot		

25. P401520 I Flexi BS outdoor cab

NI-G-SL54004

Bill of Quantities

Pos	Task/Material	Qnt	Unit	Component	Remark
1	Installation of Flexi base station outdoor cabinet.	1	pcs		Incl. fixing, labeling and termination.
2	Installation of power cable.	3X5	m	average	Incl. fixing, labeling and termination **3X 6mm2 or 25 mm² DC power cable** **(average lenth 5m per cable)**
3	Installation of grounding cable.	1	pcs	average	Incl. fixing and termination.
4	**Optical fiber cable installation**	**6**	**m**	**average**	**Additional effort for optical fiber cable routing from AAOB cabinet to FO patch pannel inside the Power / site support cabinet (infrastructure cabinet). Average 6m; average 12 FO outdoor patch cables).**
5	**Installation of DCDU RTP 1317**	**1**	**pcs**		**installation of Raycap PDU (if needed)**
6	**Installation of Assa Abloy lock cylinder**	**1**	**pcs**		

AAOB: Dimension (WxDxH): 700 x 700 x 1050mm / weight 120kg
Cabinet includes only a power distribution frame, no Power supply,
(Please note, if there will be a crane needed, then crane will be ordered extra)

Contained in some other work packages (P544266; P534366 but left in as more detailed description).

26. P401529 I AirScale BS system module indoor

NI-G-SL54111

Nokia Airscale baseband (AMIA) will be used mainly in for City sites.
Nokia Airscale compact Baseband (ASOG) will be used mainly for rural sites.
Assumed share will be 75% AMIA / 25% ASOG)

Bill of Quantities

Pos	Task/Material	Qnt	Unit	Component	Remark
1	Installation of AirScale BS Indoor system module casing (AMIA).	1	pcs		Incl. fixing, labeling. (installation ether in a site support cabinet or an indoor 19” rack)
2	Installation of AirScale BS common unit.	1	pcs		Incl. fixing.
3	**Supply of grounding cable**	**1**	**pcs**		**H07V-K 1x16² green/yellow or simuar DT released grounding cable.**
4	Installation of grounding cable.	1	pcs		Incl. fixing and termination.
5	Installation of power cable.	1,5	m	average	Incl. fixing, labeling and termination.
6	Installation of optical fiber patch cables	13	pcs	average	Installation of delivered pre-manufactured FO optic jumper cables (up to 2m; 95% 1m) inside the rack) with fixing accessories and labels between Airscale BS System module and FO-patchpanel inside the rack. (anmount of the FO- patching cables towards patchpannel for RRH /MAA / Transport router connections are in average 12 -> RRH + 1x transport connection.
7	Installation of capacity plug-in unit(s).	1	pcs		Up to 4 PIUs. Incl. fixing.
8	Installation testing of AirScale BS system module. Power-on test	1	pcs		Call GDC for remote commissioing / Integration

Pos	Task/Material	Qnt	Unit	Component	Remark
1	Installation of AirScale BS Indoor compact system module (ASOG).	1	pcs		Incl. fixing, labeling. (installation ether in a site support cabinet or an indoor 19” rack)
2	**Supply of DC grounding cable**	**1**	**m**		**H07V-K 1x16² green/yellow or simuar DT released DC cable.**
3	Installation of grounding cable.	1	pcs		Incl. fixing and termination.
4	**Supply of DC power cable**	**1,5**	**m**	**average**	**Rosenberger SL2C6MM2FRNC-S-BK-R or simiar DT released DC cable.**
5	**Installation of optical fiber patch cables**	**13**	**pcs**	**average**	**Installation of delivered pre-manufactured FO optic jumper cables (up to 2m; 95% 1m) inside the rack) with fixing accessories and labels between Airscale BS System compact module and FO-patchpanel inside the rack.** **(anmount of the FO- patching cables towards patchpannel for RRH-/ Transport router connections are in average 12-> RRH + 1x transport connection.**
6	Installation testing of AirScale BS compact system module. Power-on test	1	pcs		Call GDC for remote commissioing / Integration

weight > 8kg

27. P401537 I AirScale BS capacity unit

NI-G-SL54115

Bill of Quantities

Pos	Task/Material	Qnt	Unit	Component	Remark
1	Installation of AirScale capacity plug-in unit(s).	1	pcs		Up to 3 PIUs (into the AMIA subrack). Incl. fixing. Remote validation by Nokia GDC **This item is only valid for site extension.**

28. P401547 I BS RRH/RFM

NI-G-SL54212

Bill of Quantities

Pos	Task/Material	Qnt	Unit	Component	Remark
1	Installation of pole mounting kit.	1	pcs		Incl. fixing / labeling.
2	Installation of BS Remote Radio Head.	1	pcs		Incl. SFP installation / Termination of RET control cable / cover / **re- route (if needed) and conecting existing jumper. (potential existing 4.3 -> 7/16 Adapter have to be removed, collected for a potencial return delivery.** RRH located closed to the antenna Incl. Rigging of lifting equipment (rope and tackle or electric winch). Lifting of RRH-Modules on tower / mast.
3	**Supply of grounding cable**	**1**	**pcs**		**H07V-K 1x16² green/yellow or simuar DT released grounding cable.**
4	Installation of grounding cable.	1	pcs		Incl. fixing and termination.
5	Installation of power cable.	5	m	average	Installation and termination of shielded DC-power jumper cable (5m average; max. 10m) between PTTA Box and RRH, including labeling, testing, cable lugs and fixing (if applicable). Termination of the RET control cable to the Remote Radio Head. Incl. fixing, labeling and termination. **clamps are provided by supplier**
6	Installation of optical fiber cable.	5	m	average	Installation of delivered pre-manufactured FO optic jumper cable (5m average; max. 10m) with fixing accessories and labels between RRH module and FO-connection Box (FTTA-Box) max. 2 FO cabes per RRH **clamps are provided by supplier**
7	**C-Rail expansions (delivery and installation; for DC- / Fiber jumper if needed)**	**1**	**lot**	**Lump sum per RRH**	**Please note:** **Assume short C-Rails to fix DC-Fiber Jumper)** **Re-use of existing C-Rails as far as possible (swap sites).** **C-Rails for new RF jumper / Feeders are included in the respective order items.** **(incl. Material descriped in Item P544136)**

AHPMDG, Airscale RRH 2T4R, B8/20/28 240W

- **Dimensions H x W x D = 640 x 342 x 156 mm**
- **Weight < 36 kg**
- **Volume 34 l**
- Supply Voltage / Voltage Range: DC-48V / -40.5 to -57 V / 2 pole connector.
- Typical Power Consumption:
  100%, 25°C, 4x80W: 1253 W
  30%, 25°C, 4x24W: 617 W (~ETSI 24hr)
- Antenna Ports: 2TX/4RX B8/B20 + 2TX/4RX B28
- Connector: 4.3-10+
- Operational Temperature Range: -40°C to +55°C
- Installation options: pole, wall, rail
- For more information see Chapter 10

AHHB, Airscale RRH 4T4R, B7 160W (CPRI)

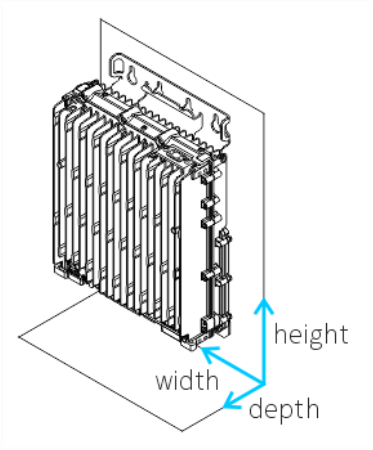

- **Dimensions H x W x D = 337 x 295 x 140 mm**
- **Weight 14 kg**
- **Volume 14 l**
- Supply Voltage / Voltage Range: DC -48V / -36 to -60V
- Typical Power Consumption:
  350W ([ETSI 24 h weighted load mix for nominal power)
  610W (100% RF load)
- Antenna Ports: 4TX/4RX, 4 x 4.3-10
- Operational Temperature Range: -40°C to +55°C
- Installation options: pole, wall
- For more information see Chapter 10

AHEGF, AirScale Dual RRH 4T4R, B1/3 400W

- **Dimensions H x W x D = 694 x 308 x 131 mm**
- **Weight 32 kg (without cover)**
- **Volume 29 l (without cover)**
- 1x DC-in connector
- Antenna Ports: 4 x 4.3-10
- Operational Temperature Range: -40°C to +55°C
- Installation options: pole, wall, rail, book
- For more information see Chapter 10

Fujitsu 1500/1800/2100 RRU - Mid-band b75(b32)/b3/b1 OFEGSA

- FJT RRU b75+b3+b1 is a high-power RRU that supports in Mid-band 1500/1800/2100 with the latest O-RAN radio portfolio for LTE/ NR deployment scenarios.
- 4T4R with MAX 80W per ANT port
- **Dimension (H x W x D): 380 x 400 x 200 mm**
- **Weight: 32 kg**
- **Volume: 30 l**
- Input voltage range: -56 V ~ -40 V
- Operating temperature range: -40°C ~ +55°C
- For more information see Chapter 10

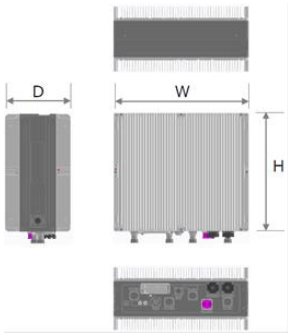

29. P401597 I 1-2 RF jumper – Rooftop (6-10m)

NI-G-SL54601

Bill of Quantities

Pos	Task/Material	Qnt	Unit	Component	Remark
1	Installation of RF jumper cable.	1	pcs		Incl. fixing, labeling termination and grounding. RRH located closed to the BB unit (no climbing required) Please consider jumper length distribution as follow: junper length between 6- 10m (incl. delivery of clamps; if needed) **Please note, this order item is only valid for DT order item "Basic 10m 6 Jumper Installation Service for material, delivery and Installation of 6*10m Jumper.** **clamps and grounding kits are provided by supplier** **DT released clamps manufacturer are FiMo, and Metpol or other DT released manufucturer**
2	**C-Rail expansions (delivery and installation; if needed)**	**1**	**lot**	**Lump sum per jumper**	**Please assume < 0,25 (average) C-Rail per jumper for moderization (swap) and < 0,1 (average) C-Rail for new site** **(incl. Material descriped in Item P544136)**

Please note: Jumpers - grounding kit from supplier!
Feeders - grounding kit is delivered by Nokia

30. P578372 I 1-2 RF jumper

NI-G-SL54602

Bill of Quantities

Pos	Task/Material	Qnt	Unit	Component	Remark
1	Installation of RF jumper cable.	1	pcs		Incl. fixing, labeling, termination **grounding for jumpers >5m and or when entering buildings).** Please consider jumper length with an average of 4m (max.10m) **clamps and grounding kits are provided by supplier** **DT released clamps manufacturer are FiMo, and Metpol or other DT released manufucturer**
2	**C-Rail expansions (delivery and installation; if needed)**	**1**	**lot**	**Lump sum per jumper**	**Please assume < 0,25 (average) C-Rail per jumper for moderization (swap) and < 0,1 (average) C-Rail for new site (incl. Material descriped in Item P544136)**

31. P536357 S Earthing connection (pcs)

NI-G-SL43160

Bill of Quantities

Pos	Task/Material	Qnt	Unit	Component	Remark
1	Grounding service for jumper / feeder	1	pcs		supply, material and installation for jumper / feeder grounding. 2*grounding kit and cables, install grounding point (e.g. band grounding clamp etc.) **grounding kits / band grounding clamp are provided by supplier** **(will be ordered as surcharge item, if grounding have to be done on an existing cable based on DT request)**

32. P403232 I ODF shelf

NI-G-SL51631

Bill of Quantities

Pos	Task/Material	Qnt	Unit	Component	Remark
1	Installation of an ODF shelf.	1	pcs		Installation of FO-connection Box (FTTA-Box) at RF-Module / RRH end or installation of 19” FO-patch panel (1U) at System Module end. Termination of Multi-Fiber cable connectors (LC-Duplex) at FO-connection box or 19” FO-patch panel including fixing, and labeling.
2	**Mounting material**	**1**	**pcs**		**Mounting material (DT released metal strips; srews etc.) provided by supplier.** **e.g. www.bandimex.de**

33. P592195 I FO trunk cable basic - 10m

NI-G-SL51431

Bill of Quantities

Pos	Task/Material	Qnt	Unit	Component	Remark
1	Installation of a trunk multi fiber optical cable (max. 24 fiber per cable).	10	m		Incl. fixing, labeling. (Horizontal / vertical installation of Multi-Fiber cable (on existing c-rails, into ducts or sub ducts) Opening & closing of fire protection cable entry gland (e.g. Roxtec) are not part of this item. **Clamps provided by Nokia.**

34. P403198 I DC power cable pair <25mm add - 10m

NI-G-SL51512

Bill of Quantities

Pos	Task/Material	Qnt	Unit	Component	Remark
1	Installation of ~~a pair of~~ **one 90% of the cases or two 10% of the cases see below)** DC power **trunk** cable.	10	m		Horizontal / vertical installation of shielded DC-power cable per 10 meter on c-rails, into ducts or sub ducts including fixing e.g. with multi cable clamps and labeling. Opening & closing of fire protection cable entry gland (e.g. Roxtec) are not part of this item. **Item will be ordered multiple times if length exceeds 10m.** **For example:** **Cable length 44m = item will be ordered 5X** It is valid for 6X2 DC lines (share see below). **clamps provided by Nokia**

Category	Occurrence
DC power cable installation by laying (6x2x6mm2 or 10mm2) shielded/armored DC-cable)	90%
DC power cable installation by laying **2X** (3x2x16mm2) shielded/armored DC-cable)	10%

35. P548882 ~~P548881~~ HetNet IC FPFH outdoor - pole

Bill of Quantities

Pos	Task/Material	Qnt	Unit	Component	Remark
1	Installation of ext. Power Distribution Box (PTTA-Box) at RF-Module / RRH end.	1	pcs		Distribution box as depicted below
2	Termination of DC- or Multi-DC cable at PTTA-box including fixing, and labeling.	1	pcs		
3	**Supply of grounding cable**	**1**	**pcs**		**H07V-K 1x16² green/yellow or simuar DT released grounding cable.**
4	Installation grounding cable	1	pcs		
5	Labelling, documentation	1	pcs		
6	Mounting material	1	pcs		Mounting material (DT released metal strips; srews etc.) provided by supplier. e.g. www.bandimex.de

Example (different variants available):

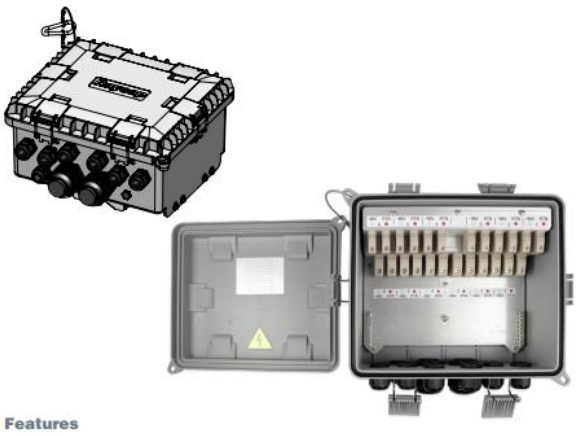

36. P548880 HetNet IC FPFH indoor

Bill of Quantities

Pos	Task/Material	Qnt	Unit	Component	Remark
1	Installation of DCDU (FPFH) subrack	1	pcs		Indoor Distribution/Fuse box as depicted below
2	Installation of 3 X DC input power cables	3	pcs		Up to 3X DC input power cable
3	**Supply of grounding cable**	**1**	**pcs**		**H07V-K 1x16² green/yellow or simuar DT released grounding cable.**
4	**Supply of DC cable**	**3**	**pcs**		**Material delivery of 25mm2 DC (e.g. SL2C25MM2FRNC-S-BK-R cable; average cable lenth 1,5m**
5	Installation grounding cable	1	pcs		
6	Termination of DC- or Multi-DC cable at PTTA-box including fixing, and labeling.	1	pcs		
7	Labelling, testing, documentation	1	pcs		

Please note: Optional item!

For Rollout the cost will be covered via order item: P544266 (TI RAN Inst Extra Work Mini WP add type3)

For modernization/Swap via order Item: P534366 (TI RAN Inst Extra Work Small WP basic) with an % share.

Example (different variants available):

37. P441411 I panel antenna up to 2,1m - Tower.

NI-G-SL54512

Bill of Quantities

Pos	Task/Material	Qnt	Unit	Component	Remark
1	Cross-Dock Management / Transport DOP to site	1	pcs		Additional efforts for Cross-Dock Management / Transport DOP to site for passive antenna (only together with "Radio" equipment) **(Antennas will be delivered from DT Warehouse to Subco warehouse)**
2	Installation of panel RF (passive) antenna with a panel antenna height up to **2,1m.**	1	pcs		Incl. mounting bracket/tilting kit, RET cable fixing and labeling. Termination of the feeder line to the antenna (only if RF feeder exists). Incl. Rigging of lifting equipment (rope and tackle or electric winch). Lifting of passive antenna on tower / mast. Installation of connector covers (caps) if needed. Antenna exanple: Commscope: RRZZVV-65B-R6N43 Dimensions Width 430 mm | 16.929 in Depth 197 mm | 7.756 in Length 2100 mm | 82.677 in Net Weight, antenna only 32.4 kg
3	**Supply of grounding cable**	**1**	**pcs**		**H07V-K 1x16² green/yellow or simuar DT released grounding cable.**
4	Installation of grounding cable.	1	pcs	average	Incl. fixing and termination. **Connect the antenna system to an existing lightning protection system up to a length of 5 m in less then 5% of the sites**
5	Alignment of panel RF antenna.	1	pcs		Azimuth and tilting adjustments are included in the item. VSWR test is not included in this item.
6	**Mark restricted Area (new sites only) / Documentation**	**1**	**pcs**		**Mark the restricted area, incl. material (new sites, if needed)** **Prepare and supply the planning (building) parameters (measured values) based on template**

38. P443032 I AirScale MAA (active Antenna)

NI-G-SL54226

Bill of Quantities

Pos	Task/Material	Qnt	Unit	Component	Remark
1	Installation of pole mounting kit.	1	pcs		Incl. fixing / labeling.
2	Installation of AirScale Active Antenna.	1	pcs		Incl. Rigging of lifting equipment (rope and tackle or electric winch). Lifting of MAA (AAS) on tower / mast.
4	**Supply of grounding cable**	**1**	**pcs**		**H07V-K 1x16² green/yellow or simuar DT released grounding cable.**
3	Installation of grounding cable.	1	pcs	average	Incl. fixing and termination.
5	Installation of power cable.	6	m	average	Incl. fixing, labeling and termination. **6m average (max. 15m; very rare cases)** **clamps are provided by supplier**
6	Installation of optical fiber cable.	6	m	average	Incl. fixing, labeling, cleaning of connectors and termination. **6m average (max. 15m very rare cases)** **clamps are provided by supplier**
7	Alignment of MAA.	1	pcs		Azimuth and mechanical tilting adjustments. (no Electrical Tilt / AISG cabling to be consider)
8	**C-Rail expansions (delivery and installation; for DC- / Fiber jumper if needed)**	**1**	**lot**	**Lump sum per MAA**	**Please note:** **Assume short C-Rails to fix DC-Fiber Jumper only!)** **Re-use of existing C-Rails as far as possible (swap sites).** **(incl. Material descriped in Item P544136)**

AQQQ AirScale MAA 32T32R 128AE n78 240W

Technical data (Preliminary)

	Product Specifications
Standard	3GPP/CEPT-A/ISED, TDD
Supported RAT by HW	5G/LTE
Band / Frequency range	3420 – 3800 MHz
Max. supported modulation	256 QAM
Number of TX/RX paths	32T / 32R
MIMO streams	16
Instantaneous bandwidth IBW	380 MHz
Occupied bandwidth OBW	200 MHz
Total average EIRP	76.8 dBm
Max. output power per TRX	7.5 W / TRX (240 W total), SW settable up to 13 dB down
Dimensions / Volume	625 mm x 395 mm x 100mm/150 mm (H x W x D) / 27.9L
Weight	17.3 kg, without mounting brackets
Wind load , Front/Rear/Side	344/344/102 N ,EN1991-1-4, wind velocity 42m/s (150 km/h)
Supply voltage / Connector type	DC -36 V... -60V / Nokia 2 pole connector
Power consumption	745 W (75% DL duty cycle, ETSI 24h average load, target)
Optical ports	4 x SFP28 / AOPC
Other interfaces / Connector type	AISG / RS-485, External Alarms / MDR26, 6 status LEDs
Operational temperature range	-40 °C ... +55 °C
Cooling	Forced cooling
Installation options	Pole / wall, ± 15° mechanical vertical tilt
Ingress / Surge protection	IP65 / Class II 20 kA

2 © 2018 Nokia

AirScale High Power Wide Band MAA benefits

- 5G Adaptive Antenna System for optimized capacity and coverage
- Beamforming capable 32T32R with total 240W output power
- Optimized operation for n78

AQQQ 475788A

NOKIA

39. P517302 Radio Access Testing/Acceptance - Type 2

NI-G-SL54456

Bill of Quantities

Pos	Task/Material	Qnt	Unit	Component	Remark
1	Run SmartApp for automatic calls testing.	1	site		SmartApp is easy to use and automated call tests solution developed by Nokia. Will be ordered per 3 sector site (up to 8 frequencies, average **5)** **Test duration 2,5-3h.** **Released SmartApp Mobile Phone will be provided by Nokia.** **SIM card with data contract (contain VoLTE option) provided by Supplier - license for the Smart App provided by Nokia** **Call Test must be performed (after implementation) at the same day.**

Test execution

Field test

Test execution is mostly automated

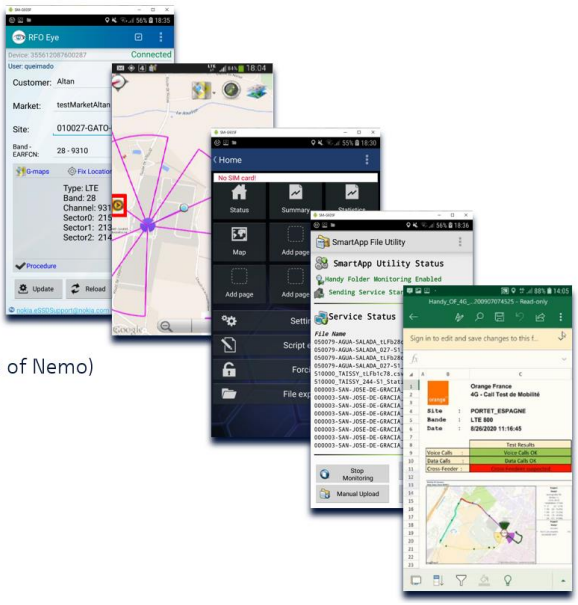

Field test engineer will

- Authenticate
- Download Site/Sector configuration (RFEco)
- Select test script (Nemo)
- Locate himself within coverage area (with help of Nemo)
- Launch test sequence (Nemo)
- Upload log data (SmartApp FU)
- (wait for processing)
- (Planned) Download and visualize report

SmartApp - Field testing.pdf

40. P534372 Removal cabinet stand-alone

NI-G-SL59131

Bill of Quantities

Pos	Task/Material	Qnt	Unit	Component	Remark
1	Disconnecting and removal of power cable(s).	10	m	average	Incl. removal of fixing materials and label(s) at DC board.
2	Disconnecting and removal of transmission cable(s).	10	m	average	Incl. removal of fixing material and label(s) at DDF/ODF/LAN panel.
3	Disconnecting and removal of external alarm cable(s).	10	m	average	If applicable. Incl. removal of fixing materials.
4	Disconnecting and removal of grounding cable.	1	pcs		Incl. removal of fixing materials.
5	**Removal of macro BTS cabinet or HUA Baseband unit in Infra cabinet**.	1	pcs		**Indoor**: -Move the existing Indoor cabinet from its position, in order to clear installation place -Collecting of the removed items in a designated area at the site. **Outdoor**: -De-installation of old Outdoor cabinet from the site support structure (steel construction or concrete base) -Preparation of old Outdoor cabinet for removal (e.g. crane lifting) e.g.Huawei BTS 3900 **Typically, removal of legacy cabinet e.g. Huawei (BTS 3200) cabinet.** **Please note: Item will be always ordered for a "swap" site even there is no Hua BTS 3900 cabinet to remove.** **Instead of BTS 3900 cabinet removal the removal of the Huawei Baseband unit (installed in Infrastructure cabinet is part of this order item.**
6	Removal of Huawei IFS 06 RRH indoor cabinet (if needed)	1	pcs		**Removal of Huawei IFS RRH cabinet up to 20% of the sites.**

IFS 06 cabinet left side
Please note removal of RRH are included in order item P520574 Removal RRH, RFM. (not part of this item)

41. P520573 Removal BS Macro System Module

NI-G-SL59115

Bill of Quantities

Pos	Task/Material	Qnt	Unit	Component	Remark
1	Deinstallation of a BS Macro System Module. (removal of a legacy baseband unit, installed in an 19" Inch indoor or in an site support cabinet / Power supply outdoor rack)	1	pcs		The equipment and all the cabling within Rack/cabinet (Power, Grounding and LAN/FO). Item will be no longer part of a "main swap" ordering. ➔ Will be only ordered in special cases as surcharge.

42. P520574 Removal RRH, RFM

NI-G-SL59803

Bill of Quantities

Pos	Task/Material	Qnt	Unit	Component	Remark
1	and removal of power cable(s).	5	m	average	Removal of DC-power jumper cable between PTTA Box and RRH Including removal of fixing materials.
2	Disconnecting and removal of databus FO cable(s).	5	m	average	Removal of optic jumper cable with fixing accessories and labels between RRH module and FO-connection Box (FTTA-Box),
3	Disconnecting and removal of grounding cable.	1	pcs		Including removal of fixing materials.
4	Removal of RRH, RFM	1,7	pcs	(1-2 RRH; in average 1,7; unbinding)	Ordered in case of swap sites, One RRH installation is ordered with one RRH removal. Item must also cover 2:1 exchanges.e.g. New Low band RRH includes 700/800/900 Mhz (but singleband 800 and 900 Mhz RRH have to be removed. Removal order only 1X !. Rooftop or Tower. Rigging/climbing covered via installation item
5	~~Removal~~ Disconnecting of jumper	2-4	pcs		Amount of jumper depends on the RRH type (**in case of jumper removal / change; will be ordered separatly as "jumper change")**
6	Removal of wall or pole mounting bracket.	1	pcs		If applicable.

43. P578369 Removal MAA (active Antenna; AAS)

NI-G-SL59118

Bill of Quantities

Pos	Task/Material	Qnt	Unit	Component	Remark
1	Disconnecting and removal of power cable.	6	m	average	Removal of DC-power jumper cable between PTTA Box and MAA (AAS) Including removal of fixing materials.
2	Disconnecting and removal of optical fiber cable.	6	m	average	Removal of optic jumper cable with fixing accessories and labels between MAA (AAS) and FO-connection Box (FTTA-Box),
3	Disconnecting and removal of grounding cable.	1	pcs		Including removal of fixing materials.
4	Removal of Active Antenna (MAA/AAS).	1	pcs		Incl. removal of mounting bracket.

44. P454394 Removal omni or panel antenna

NI-G-SL59802 Removal of omni or panel antenna

Bill of Quantities

Pos	Task/Material	Qnt	Unit	Component	Remark
1	Disconnecting and removal of grounding cable.	1	pcs		Incl. removal of fixing materials.
2	Removal of an outdoor passive antenna	1	pcs		Incl. disconnecting of antenna line and removal of mounting bracket and/or tilting kit.
3	Scrapping of removed passive antenna				Incl. documentation of waste disposal

45. P540638 HetNet Travel Small team (2-3 persons)

NI-G-SL57702

Bill of Quantities

Pos	Task/Material	Qnt	Unit	Component	Remark
1	Travel of a small team of 2-3 persons by car (station wagon, MPV, or off-road SUV), train or other means needed for the persons to get to the site.	1	pcs		Roundtrip. Travel time cost of the persons including accommodation if overnight stay is needed as long as required for completing the agreed tasks in the sales package.
2	Transportation of tools, materials or/and equipment in the same car up to the capacity of the trunk or carrying capacity of the persons and moving of the transported tools, materials or equipment onto and from the site (equipment room, battery room, rooftop, or any other part of the site).	1	pcs		
3	Insurance of the person, vehicles, tools, materials and equipment within the scope of the agreed services.	1	pcs		

46. P519824 I HetNet AirScale BS system module

NI-G-SL57709 HetNet: Baseband Module for small Cells

Bill of Quantities

Pos	Task/Material	Qnt	Unit	Component	Remark
1	Installation of AirScale BS Indoor system module casing.	1	pcs		Incl. fixing.
2	Installation of AirScale BS common unit.	1	pcs		Incl. fixing.
3	**Supply of grounding cable**	**1**	**pcs**		**H07V-K 1x16² green/yellow or simuar DT released cable.**
4	Installation of grounding cable.	1	pcs		Incl. fixing and termination.
5	**Installation of optical fiber cable.**	**2**	**m**	**average**	**Installation of delivered pre-manufactured FO optic jumper cable (2m average) with fixing accessories and labels between Airscale BS System module and FO-connection box inside the rack.**
6	Installation of capacity plug-in unit(s).	1	pcs		Up to 3 PIUs. Incl. fixing.
7	Installation testing of AirScale BS system module.	1	pcs		Call GDC for remote commissioing / Integration

47. P394545 ICIntg AirScale Micro RRH

NI-G-SL53301

Bill of Quantities

Pos	Task/Material	Qnt	Unit	Component	Remark
1	Installation of mounting kit.	1	pcs		Incl. fixing.
2	Installation of AirScale Micro Remote Radio Head.	1	pcs		Incl. cover.
3	**Supply of grounding cable**	**1**	**pcs**		**H07V-K 1x16² green/yellow or simuar DT released cable.**
4	Installation of grounding cable.	1	pcs	average	Incl. fixing and termination.
5	Installation of power cable.	5	m	average	Incl. fixing, labeling and termination. (in case of AC Version including DGUV 3 measurment)
6	Installation of optical fiber cable.	5	m	average	Incl. fixing, labeling, cleaning of connectors and termination.
7	Commissioning and integration of AirScale Micro Remote Radio Head.	1	pcs		Nokia GDC

AirScale Outdoor Radio System Small Cell Solution (5G Micro RRH AWHQF n78 LTE B43)

Specification[1]	Details
Spectrum	Subset of band n78 3600 – 3800 MHz (LTE Band 43)
RF Output Pwr	Up to 10W per TX Path (TD 4x10W) 4T4R
RF Bandwidth	oBW: 100 MHz 4T4R. iBW : 200 MHz 4T4R
Bandwidth	Carrier NR: 1 x100 MHz, 1 x 50 MHz
Modulation (Max)	256 DL QAM, 64 UL QAM support
Physical Size	RRH - 8L , 11kg DC (without Antenna) 245 x 295 x 105 mm AC/DC Module - 1L, 1.5kg 30 x 323 x 105 mm Antenna - 1.6L, 1.3kg 270 x 295 x 20 mm
Synchronization	CPRI
Fronthaul	3 x SFP+ (3 x 9.8 Gbps)
External Alarm	2 Input
Antenna	Directional Panel (no BF) Antenna Ports: Nex10
Operating Temp	-40˚C to +55˚C
Input Power	AC: 76V to 288 V. DC: -40.5V to -57V
Power Consumption	Max: 345W, Typical: 285W
Regulatory	China, ETSI

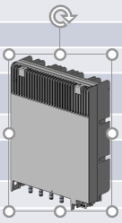

1 Preliminary specifications; subject to change

48. P441403 InstM AirScale Micro RRH DC

NI-G-ML53302

Bill of Quantities

Pos	Task/Material	Qnt	Unit	Component	Remark
1	Supply of fixing materials.	1	pcs		Fixing materials which is suitable for wall fixing or steel bands for pole fixing. Only material no Service cost included. **Mechanical mounting metal part is provided by Nokia** **only the blue marked items are in the responsibility of the supplier**
2	Supply of grounding cable complete.	3	m	CS73178	MKEM-LSZH 16mm2 yellow/green installation cable.

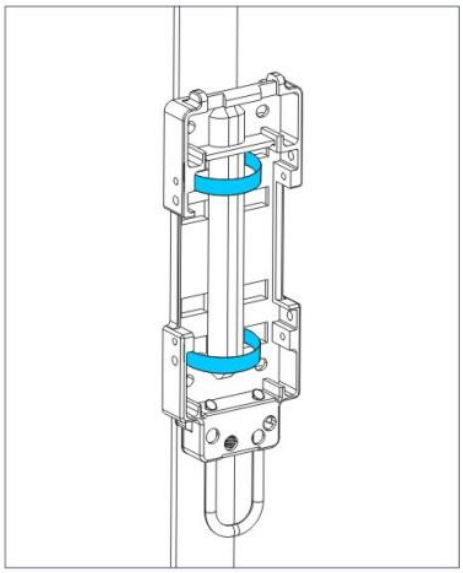

Figure 51: Fixing the unit bracket to the wall

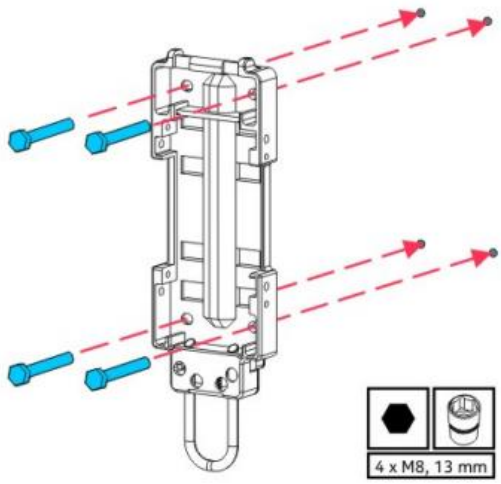

49. P548876 I HetNet street antenna

Small cell antenna installation

Bill of Quantities

Pos	Task/Material	Qnt	Unit	Component	Remark
1	Installation of RF street antenna. (part of Nokia small cell soultion)	1	pcs		Incl. fixing and labeling. (part of Nokia small cell soultion)

AirScale Micro Remote Radio Head

Integrated Directional Antenna- AAQA for AZQC

Specification	Details
LTE access	3300-3800MHz
Band Supported	B48 - CBRS
Antenna Configuration	X-polarized directional antenna
Antenna Gain	10.5 ± 1.5 dBi
Horizontal Beam Width	65 ± 10°
Vertical Beam Width	35 ± 10°
Physical size (HxWxD)	295X270X20mm
Weight	1.3kg
Nominal impedance	50 ohm
Return Loss	> 12 dB
Port Isolations	> 20 dB
Interfaces	4 port, Nex10 straight male connectors with cable
Operating Temp.	-40° to +55° C
IP Grade	IP55

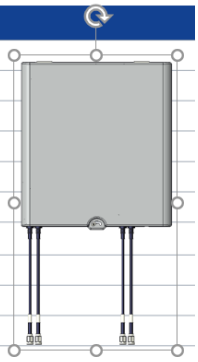

1 © 2018 Nokia

AAQA Antenna Overview

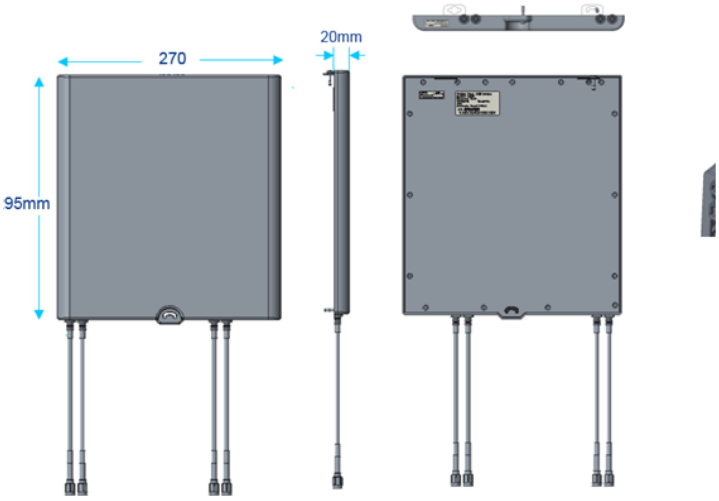

1. 4 ports with 180mm length cable.
2. ANT w/ cable weight less than 1.2KG.
3. Antenna size is 295X270X20(mm).
4. The installation similar with AAFA.

50. P534384 HetNet Call testing silver

Small Cell call testing per Micro RRH

Bill of Quantities

Pos	Task/Material	Qnt	Unit	Component	Remark
1	Run SmartApp / or customer specific application for the automatic calls testing.	1	mRRH		SmartApp is easy to use and automated call tests solution developed by Nokia. Will be ordered per mRRH (small cell) Same procedure as item number P517302 (but only for one Small Cell / **one sector** / one frequency) **test duration between 20-30 min.** **Released SmartApp Mobile Phone will be provided by Nokia.** **SIM card with data contract provided by Supplier - license for the Smart App provided by Nokia** **Call Test must be performed (after implementation) at the same day.**

Test execution

Field test

Test execution is mostly automated

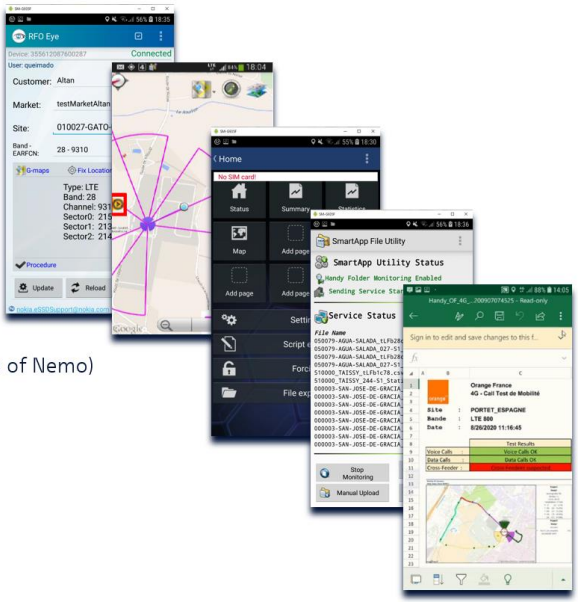

Field test engineer will

- Authenticate
- Download Site/Sector configuration (RFEco)
- Select test script (Nemo)
- Locate himself within coverage area (with help of Nemo)
- Launch test sequence (Nemo)
- Upload log data (SmartApp FU)
- (wait for processing)
- (Planned) Download and visualize report

SmartApp - Field testing.pdf

51. P454355 Removal SmallCell AP-BS

NI-G-SL59121

Bill of Quantities

Pos	Task/Material	Qnt	Unit	Component	Remark
1	Disconnecting and removal of power cable.	10	m	up to 10m	Incl. removal of fixing materials.
2	Disconnecting and removal of transmission cable.	10	m	up to 10m	Incl. removal of fixing material and label(s) at DDF/ODF/LAN panel.
3	Disconnecting and removal of grounding cable.	10	m	up to 10m	If applicable. Incl. removal of fixing materials.
4	Removal of Small Cell Access Point/Base Station.	1	pcs		Access point and BS are one unit
5	Removal of ceiling, wall or pole mounting bracket.	1	pcs		If applicable.

52. P537816 TI RAN Inst Extra Work Small WP add closing of fire bulkhead (without travel)

NI-E-SL51932

Bill of Quantities

Pos	Task/Material	Qnt	Unit	Component	Remark
1	**closing** of one fire protection cable entry gland according to the specification of the particular fire protection system.	1	site		It is assumed that the work described under this service item will be performed by the implementation team during the normal site activities (installation & commissioning). Work must be done by a certified person (as part of the implementation team). Optional service item in addition to the installation or removal of interface cabling **Incl. fire protection cable entry glad back- fill material delivery (if needed)** **No firewalls shall be left open at the evening when teams leave the site. If needed, temporary closure must be executed.**

Please note:
Temporary open closing of fire bulkheads and “normal” cable entries are part of the following order items: *P534366 RAN Inst Extra Work Small WP basic / P544266 TI RAN Inst Extra Work Mini WP add type3.*

To differentiate work on a fire bulkhead, it must first be differentiated from “cable walls, walls, etc.” Roof ducts required. A fire bulkhead can generally be recognized by the following points (only one point has to be fulfilled):

• Label on the firewall with installer, last occupancy, construction type, year of construction
• Fire barrier frame and modular fire barrier cushion, - stones (typical companies are Hilti, Staudt etc.)
• Fire barrier is recorded and described in the plan
• Cable laying through two fire compartments is described in the plan
• An F90 technical room in which the system modules are installed (Note: The door may be opened despite the F90 Classification must only be designed as T30 - the door is not an indication of the F90 classification) - Roxtec cable glands or comparable modular systems with removable shells apply Context of this document not as a fire barrier
• The existing cables are in front of or behind a wall passage (approx. 0.5m) with a fire protection coating Mistake Non-firewalls are “normal” cable entries: • CES – Implementation • “Gooseneck (Schwanenhals)” • Roxtec frames or comparable modular systems with removable shells are not considered firewall

- Roxtec round wall ducts • Systems from the manufacturers MCT Brattberg, Hauff

*Non-firewalls are "normal" cable entries (**fire bulkhead item will be <u>not ordered</u>):***

- CES – Implementation
- "Gooseneck" (Schwanenhals)
- Roxtec
- Systems from the manufacturers MCT Brattberg, Hauff

Figure 4: Examples of firewalls

Firewall *No firewall.*

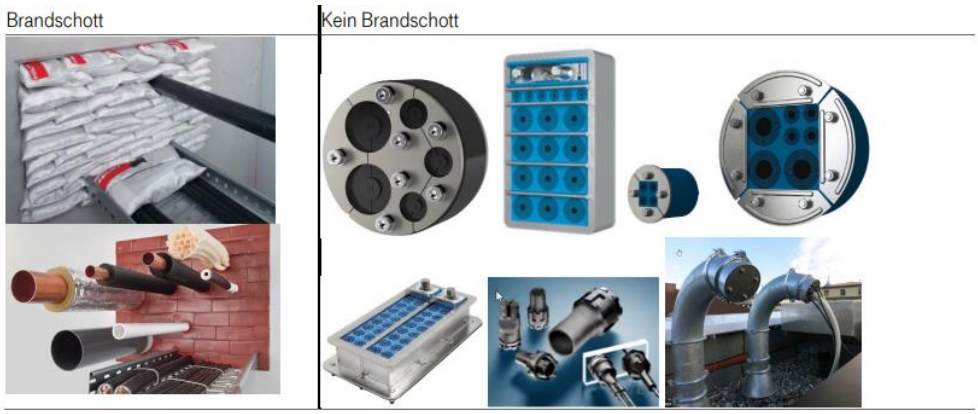

Photo source: https://www.roxtec.com/de/produkte/solutions/ https://www.hauff-technik.de/categorie/kabeldurchfuehrungen-1/ringraumsiegelen-27 https://www.hauff-technik.de/produkte/kabeldurchfuehrungen-1/dachdurchfuehrungen-38/schwanenhalsdurchführung https://www.hilti.de/c/CLS_FIRESTOP_PROTECTION_7131/CLS_FIRESTOP_BLOCKS_PLUGS_CUSHIONS_7131/r10 05 https://www.hilti.de/content/hilti/E3/DE/de/engineering/brandschutz/fire-protection/large-openings.html#nav/close

The final closing of fire barrier systems will be ordered per site.

53. P403100 Extended work hour(s) – Installer Night shift surcharge / Team

NI-G-SL51903

Bill of Quantities

Pos	Task/Material	Qnt	Unit	Component	Remark
1	Surcharge for night work (lump sum per night / swap activity)	1	shift		Surcharge for night work (up to 8 hours) **lump sum** per night / 2 installer (delta between daytime rates and night work; per night shift)

~~54. P575405_I Antenna Ancillaries – Tower~~

~~NI-G-SL54738~~

~~Bill of Quantities~~

~~Pos~~	~~Task/Material~~	~~Qnt~~	~~Unit~~	~~Component~~	~~Remark~~
~~1~~	~~Installation of filter, multiplexer(di/tri/quad), combiner, splitter, coupler or tapper.~~	~~1~~	~~site~~		~~Incl. fixing & labeling.~~

55. P578354 Removal Antenna Ancillaries

NI-G-SL59816

Bill of Quantities

Pos	Task/Material	Qnt	Unit	Component	Remark
1	Removal of passive components within antenna line, e.g. combiner, splitter etc.	1	pcs		Incl. disconnecting of antenna line **Please note: Item will be only ordered (in very rare cases) together with new combiner installation (order item P410848 I DAS Combiner Unit) as a combiner swap** **and dismantling of a combiner in case of forced site move or Removal of Equipment in combination with WEPLA Main Service)** **For combiner dismantling combined with a swap, item number P454395 Removal Antenna Ancillaries (lump sum per site) will be ordered**

56. P519833 ~~P534520~~ I 1-2 antenna line pair – first 5m

Bill of Quantities

Pos	Task/Material	Qnt	Unit	Component	Remark
1	Installation of 1/2" RF antenna line (including conector installation and labeling).	5	m		Dismantling and reassembly of the cable entry or gland – only if applicable Installation of 1 sector (2 runs) up to 1/2" feeder cable in the defined length with fixing accessories (clamps, cable ties), grounding kits, **labels and connectors**
2					Antenna line = Feeder pair **(Nokia provides cable, clamps and grounding kits)**
3	**C-Rail expansions (delivery and installation; if needed)**	**1**	**lot**	**Lump sum per feeder pair**	**Please assume < 0,5 (average) C-Rail per feeder pair for moderization (swap) and < 0,1 (average) C-Rail for new site** **(incl. Material descriped in Item P544136)**

Please note: Feeders - grounding kit is delivered by Nokia
Jumpers - grounding kit from supplier!

57. P519834 ~~P534522~~ I 1-2 antenna line pair add - 1m

Bill of Quantities

Pos	Task/Material	Qnt	Unit	Component	Remark
1	Installation of additional 1/2" RF antenna line.	1	m		Dismantling and reassembly of the cable entry or gland – only if applicable Installation of 1 sector (2 runs) up to 1/2" feeder cable in the defined length with fixing accessories (clamps, cable ties), grounding kits.
					Antenna line = Feeder pair **(Nokia provides cable, clamps and grounding kits)**

58. P401619 ~~P534528~~ I 7-8 antenna line pair – first 5m

NI-G-SL54628

Bill of Quantities

Pos	Task/Material	Qnt	Unit	Component	Remark
1	Installation of 7/8" RF antenna line (including conector installation and labeling).	5	m		Dismantling and reassembly of the cable entry or gland – only if applicable Installation of 1 sector (2 runs) up to 7/8" feeder cable in the defined length with fixing accessories (clamps, cable ties), grounding kits, **labels and connectors**
2					Antenna line = Feeder pair **(Nokia provides cable, clamps and grounding kits)**
3	**C-Rail expansions (delivery and installation; if needed)**	**1**	**lot**	**Lump sum per feeder pair**	**Please assume < 0,5 (average) C-Rail per feeder pair for moderization (swap) and < 0,1 (average) C-Rail for new site** **(incl. Material descriped in Item P544136)**

59. P578378 ~~P534530~~ I 7-8 antenna line pair add - 1m

NI-G-SL54627

Bill of Quantities

Pos	Task/Material	Qnt	Unit	Component	Remark

1	Installation of additional 7/8" RF antenna line.	1	m		Dismantling and reassembly of the cable entry or gland – only if applicable Installation of 1 sector (2 runs) up to 7/8" feeder cable in the defined length with fixing accessories (clamps, cable ties), grounding kits.
					Antenna line = Feeder pair **(Nokia provides cable, clamps and grounding kits)**

60. P578385 ~~P534536~~ I 1 1-4 antenna line pair - first 5m

NI-G-SL54658

Bill of Quantities

Pos	Task/Material	Qnt	Unit	Component	Remark
1	Installation of **1** 1/4" RF antenna line (including conector installation and labeling).	5	m		Dismantling and reassembly of the cable entry or gland – only if applicable Installation of 1 sector (2 runs) up to **1** 1/4 " feeder cable in the defined length with fixing accessories (clamps, cable ties), grounding kits, **labels and connectors**
2					Antenna line = Feeder pair **(Nokia provides cable, clamps and grounding kits)**
3	**C-Rail expansions (delivery and installation; if needed)**	**1**	**lot**	**Lump sum per feeder pair**	**Please assume < 0,5 (average) C-Rail per feeder pair for moderization (swap) and < 0,1 (average) C-Rail for new site** **(incl. Material descriped in Item P544136)**

61. P578387 ~~P534538~~ I 1 1-4 antenna line pair add - 1m

NI-G-SL54657

Bill of Quantities

Pos	Task/Material	Qnt	Unit	Component	Remark

1	Installation of additional 1 1/4" RF antenna line.	1	m		Dismantling and reassembly of the cable entry or gland – only if applicable Installation of 1 sector (2 runs) up to 1 1/4" feeder cable in the defined length with fixing accessories (clamps, cable ties), grounding kits.
					Antenna line = Feeder pair **(Nokia provides cable, clamps and grounding kits)**

62. P401635 ~~P534544~~ I 1 5-8 antenna line pair - first 5m

NI-G-SL54648

Bill of Quantities

Pos	Task/Material	Qnt	Unit	Component	Remark
1	Installation of 1 5/8" RF antenna line (including conector installation and labeling).	5	m		Dismantling and reassembly of the cable entry or gland – only if applicable Installation of 1 sector (2 runs) up to 1 5/8 " feeder cable in the defined length with fixing accessories (clamps, cable ties), grounding kits, **labels and connectors**
2					Antenna line = Feeder pair **(without clamps/grounding kits delivery)**
3	**C-Rail expansions (delivery and installation; if needed)**	**1**	**lot**	**Lump sum per feeder pair**	**Please assume < 0,5 (average) C-Rail per feeder pair for moderization (swap) and < 0,1 (average) C-Rail for new site** **(incl. Material descriped in Item P544136)**

63. P578384 ~~P534546~~ I 1 5-8 antenna line pair add - 1m

NI-G-SL54647

Bill of Quantities

Pos	Task/Material	Qnt	Unit	Component	Remark
1	Installation of additional 1 5/8" RF antenna line.	1	m		Dismantling and reassembly of the cable entry or gland – only if applicable Installation of 1 sector (2 runs) up to 1 5/8" feeder cable in the defined length with fixing accessories (clamps, cable ties), grounding kits.
					Antenna line = Feeder pair **(without clamps/grounding kits delivery)**

~~64. P578805 Removal ant. line 2 1-4 up to 10m - Tower~~

~~NI-G-SL59828~~

~~Bill of Quantities~~

~~Pos~~	~~Task/Material~~	~~Qnt~~	~~Unit~~	~~Component~~	~~Remark~~
~~1~~	~~Removal of antenna line upto 2 1-4.~~	~~10~~	~~m~~	~~(per sector)~~	~~Incl. disconnecting of antenna line and removal of sealing material if applicable.~~ ~~-Installation of connector covers (caps) to the antenna connector and the connectors of the passive line components (if applicable.~~ ~~-Collecting of the removed items in a designated area at the site.~~
~~2~~	~~Removal of grounding kits~~	~~2~~	~~pcs~~		~~If applicable.~~
~~3~~	~~Removal of antenna line jumper.~~	~~1~~	~~pcs~~		~~Incl. removal of fixing materials, if applicable.~~
					~~Will be ordered in 10m increments.~~
					~~Assumed average feeder line length 40m~~
					~~Antenna line = 1 feeder pair~~

65. P534371 Removal RF cabling pair stand-alone (Feeder dismantling > 10m (lump sum per site)

Bill of Quantities

Pos	Task/Material	Qnt	Unit	Component	Remark
1	Removal of antenna lines >10m length upto 2 1-4”	1	site		Incl. disconnecting of antenna line and removal of sealing material if applicable. Collecting of the removed items in a designated area at the site.
2	Removal of grounding kits	1	site		If applicable.
					Lump sum per site; removal of feeder first10m feeder removal is covered via P534366 TI RAN Inst Extra Work Small WP basic)

66. P394858 S Grounding bar

NI-G-SL43105

Bill of Quantities

Pos	Task/Material	Qnt	Unit	Component	Remark
1	Grounding bar installation.	1	pcs		Provide and install earthing / grounding bar ~~including earthing cable up to connectors at the Equipment;~~ Incl. fixing, labeling and termination.
					Ordered in combination with related Material Item P544246

67. P394893 S Circuit Breaker

NI-G-SL44500

Bill of Quantities

Pos	Task/Material	Qnt	Unit	Component	Remark
1	Circuit breaker installation (DC)	1	pcs		Incl. fixing, labeling and termination.
2	Connection to power supply system.	1	pcs		(within same distribution rack)

68. P403186 I FO cable add - 10m

NI-G-SL51481

Bill of Quantities

Pos	Task/Material	Qnt	Unit	Component	Remark
1	Installation of multi fiber optical cable.	10	m		Incl. fixing. Surcharge for Horizontal / vertical installation of additional 10m Multi-Fiber cable (on c-rails, into ducts or sub ducts) including fixing e.g. with multi cable clamps, depending on the type and configuration of the basic cable
					Item will be ordered multiple times if length exceeds 10m (in 10 meter increments) e.g. 43m length - 1x basic plus 4 times this additional 10m Clamps provided by Nokia.

69. P520589 IC energy work package type 2

NI-G-SL64002

Bill of Quantities

Pos	Task/Material	Qnt	Unit	Component	Remark
1	Installation of rectifier/UPS solution cabinet.	1	site		Incl. fixing.
2	Installation of grounding cable.	3	m		Incl. fixing and termination.
3	Installation of power cable.	10	m		Incl. fixing, labeling and termination.
4	Installation of rectifier module(s).	Up to 3	pcs		
5	Installation report.	1	Site		Complete installation checklist/report.
6	Commissioning of cabinet rectifier/UPS solution.	1	site		Complete commissioning checklist/report incl. BGU V3 measurements and certificate
					The following items will be ordered for a temporary AC/DC power supply solution (if needed during swap event) • P520589 IC energy work package type 2 • P520591 Removal of energy solution • P540637 Travel - RAN team • P401496 MN Local Transport. up to 50km 3.5t/16m3 • P401505 MN Delivery by other methods • P548916 MN Packing Service
					Used as optional, additional items for swap events. PSU rack (material/HW) included in this package) DFMG “power supply” training in Oldenburg mandatory.

70. P520591 Removal of energy solution

NI-G-SL64901

Bill of Quantities

Pos	Task/Material	Qnt	Unit	Component	Remark
1	Dismantle the existing energy solution/product.	1	site		Refering to the site layout schematic and electrical diagram. Dismantling of an temporary power solution.
2	Dismantle of connection(s) to other equipment.	1	site		Using suitable tools.
3	Removal of all installation materials (cables, cable ties, etc.).	1	site		Using suitable tools.
4	Removal of old equipment in the scope.	1	site		Using suitable tools, SoW.
					Used for removal of temporary power solution

~~71. P536433_S Lightning Protection system (lot)~~

~~NI-G-SL45815~~

~~Bill of Quantities~~

~~Pos~~	~~Task/Material~~	~~Qnt~~	~~Unit~~	~~Component~~	~~Remark~~
~~1~~	~~Installation of lightning protection down conductor to ground level. Lightning arrestor installation. Installation of all necessary accessories, cadweld, bolted or crimped connections.~~	~~1~~	~~lot~~		~~Including connection to lightning protection rod and site earthing system. Supply all required labour, tools, equipment, inspection testing and services necessary for the complete works in full conformity of requirements. Remove associated debris from site.~~
					~~NOT installation of complete building's or system's lightning protection. Only connection of installed equipment to existing lightning protection~~

Detailed scope of work description from DT missing

~~72. P536434_M Lightning Protection system (lot)~~

~~NI-G-ML45815~~

~~Bill of Quantities~~

~~Pos~~	~~Task/Material~~	~~Qnt~~	~~Unit~~	~~Component~~	~~Remark~~
~~1~~	~~Lightning protection down conductor. All necessary accessories, cadweld, bolted or crimped connections.~~	~~1~~	~~lot~~		

Detailed scope of work description from DT missing

73. P544126 S Cable Tray small (m)

NI-G-SL43600

Bill of Quantities

Pos	Task/Material	Qnt	Unit	Component	Remark
1	Installation of 1m of small cable tray / trunk.	1	m		Installation or extention of internal/external cable trays **Incl. cable tray cover.**
					Will be ordered in 1m increments

74. P544127 M Cable Tray small (m)

NI-G-SL43600

Bill of Quantities

Pos	Task/Material	Qnt	Unit	Component	Remark
1	Supply of 1m small cable tray / trunk.	1	m		Supply of smal internal/external cable trays (material)
					Will be ordered in 1m increments

75. P544178 S Base plate

NI-G-SL41042

Bill of Quantities

Pos	Task/Material	Qnt	Unit	Component	Remark
1	Installation of base Elastomer plate mount.	1	pcs		Install elastomer paving stone incl. separating fleece

D-03075300 – Elastomergehwegplatten 50/50 mit Betonkern
Lieferung und Verlegung von Elastomergehwegplatten, Größe 50/50 cm, Stärke = 6 cm mit Betonkern inkl. aller Nebenarbeiten und Verlegung auf Dachflächen inkl. entsprechendem Trennvlies.

Die Herstellerangaben sind zu beachten.

Referenzprodukt: Firma Heidelberger Elastomertechnik GmbH oder gleichwertig

Preis pro Stück

76. P544179 M Base plate (lot)

NI-G-ML41042

Bill of Quantities

Pos	Task/Material	Qnt	Unit	Component	Remark
1	Supply of base plate mount.	1	**pcs**		**Provide / deliver elastomer paving** stone incl. separating fleece

D-03075300 – Elastomergehwegplatten 50/50 mit Betonkern
Lieferung und Verlegung von Elastomergehwegplatten, Größe 50/50 cm, Stärke = 6 cm mit Betonkern inkl. aller Nebenarbeiten und Verlegung auf Dachflächen inkl. entsprechendem Trennvlies.

Die Herstellerangaben sind zu beachten.

Referenzprodukt: Firma Heidelberger Elastomertechnik GmbH oder gleichwertig

Preis pro Stück

77. P544220 M Circuit breaker Type 1, xsmall (pcs)

NI-G-ML44500

Bill of Quantities

Pos	Task/Material	Qnt	Unit	Component	Remark
1	Circuit breaker rated up **to 80/125A.**	1	pcs		Provide DC circuit breaker from the sub-distribution up to the Equipment connectors Type to be specified.

78. P544246 M Earthing plate, Type 1 (pcs)

NI-G-ML43150

Bill of Quantities

Pos	Task/Material	Qnt	Unit	Component	Remark
1	Supply of earthing plate/grounding bar	1	pcs		Type to be specified.
					For Service item P394858

Example:
- Dehn - Potential equalization rails K12 with clip-on terminals, UV-stabilized item no.: 563201
https://www.dehn.de/store/p/de-DE/F5103/potentialEQ-rail-k-12-m-covering-hood-uv-resistant-?product=P5112#P5112

- Dehn - Equipotential bonding rails R15 with terminal block system
https://www.dehn.de/store/p/de-DE/F5119/potential-equalization-rails-r15-with-series-terminal-system-construction-kit?msclkid=773201c5d04b11ecace4514da2750641

79. P401641 Painting antenna panel

NI-G-SL54696

Bill of Quantities

Pos	Task/Material	Qnt	Unit	Component	Remark
1	Painting of panel antenna or Remote Radio Head/MAA (customer predefined RAL color).	1	pcs		ground layer and 2 layers of paint above (TDG paint standard have to be ensured)

80. P394929 S Bracket for RRH/RF modules (RRH – holder)

NI-G-SL45655S

Bill of Quantities

Pos	Task/Material	Qnt	Unit	Component	Remark
1	Installation of mounting system for RRH modules	1	pcs		Installation on pole / wall, etc Installation of steel L- or H bracket for RRH mounting Connect bracket to antenna grounding system (if applicable)

Example:

81. P410848 ~~P519830~~ I combiner

NI-G-SL57716

Bill of Quantities

Pos	Task/Material	Qnt	Unit	Component	Remark
1	Installation of two single or one dual combiner (per sector)	1	pcs		-Installation of grounding cable and termination at the ext. combiner grounding point. -Installation of additional fixing material for the ext. combiner, such as steel bands, etc. -Installation of external combiner with its own mounting brackets, clamps or additional fixing material including connection to the existing antenna line / jumper cable. -Installation of label for the ext. combiner.
					Installation only. Testing not included

82. P517303 Radio Controller Installation (BSC/RNC)

NI-G-SL55107

Bill of Quantities

Pos	Task/Material	Qnt	Unit	Component	Remark
1	Site readiness assessment.	1	pcs		
2	Unpacking, inventory of the delivery and discrepancy reporting.	1	pcs		
3	AirFrame rack installation.	1	pcs		Including cabinet installation, (pre-installed rack) power and grounding cabling, SFPs and Jumper Cables as per table below.
4	Final verification of the installation.	1	pcs		
5	Preparation of documentation for the work performed.	1	pcs		
6					Commissioning and integration will be performed remotely by Nokia Engineers on site
7					Rack delivery to site by Nokia

Material	Quantity
10G SFP+ Transceiver 1310 nm 10km	4
MKEM-LSZH 35 y/g inst.cbl(ord 500m mult)	10
MKEM-LSZH 35 blk inst.cbl(ord 500m mult)	40
MKEM-LSZH 35 blu inst.cbl(ord 500m mult)	40
COSLL20M Jumper Cable LC/LC SM 20m	4

AR-RACK42-AN is a standard 42U / 19” rack with 1200 mm depth for the equipment, cables and peripherals. Rack height is 1991 mm and width are 600 mm; weight up to 1,900 kg.

83. P454358 Removal controller cabinet

NI-G-SL59201

Bill of Quantities

Pos	Task/Material	Qnt	Unit	Component	Remark
1	Disconnecting and removal of power cable(s).	20	m	up to 20m	Incl. removal of fixing materials and label(s) at AC/DC board.
2	Disconnecting and removal of transmission cable(s).	20	m	up to 20m	Incl. removal of fixing material and label(s) at DDF/ODF/LAN panel. Up to 10 FO pairs and 2 Ethernet cables
3	Disconnecting and removal of external alarm cable(s).	20	m	up to 20m	If applicable. Incl. removal of fixing materials.
4	Disconnecting and removal of grounding cable.	10	m	up to 10m	Incl. removal of fixing materials.
5	Removal of radio controller cabinet.	1	pcs		Incl. plug-in-units. Default 19”/ETSI cabinet
6	Removal of fixing rail.	1	pcs		If applicable.

84. P395208 M antenna bracket

NI-G-ML45650 Material for mounting bracket (<= 20kg) for passive antenna.

Bill of Quantities

Pos	Task/Material	Qnt	Unit	Component	Remark
1	Antenna bracket system	1	pcs		Including installation materials. **Up to 20kg steel** This material item is for the provision (ordering and delivery) of steel brackets for mounting of passive antennas. Price per bracket. Steel drawings provided by Nokia.

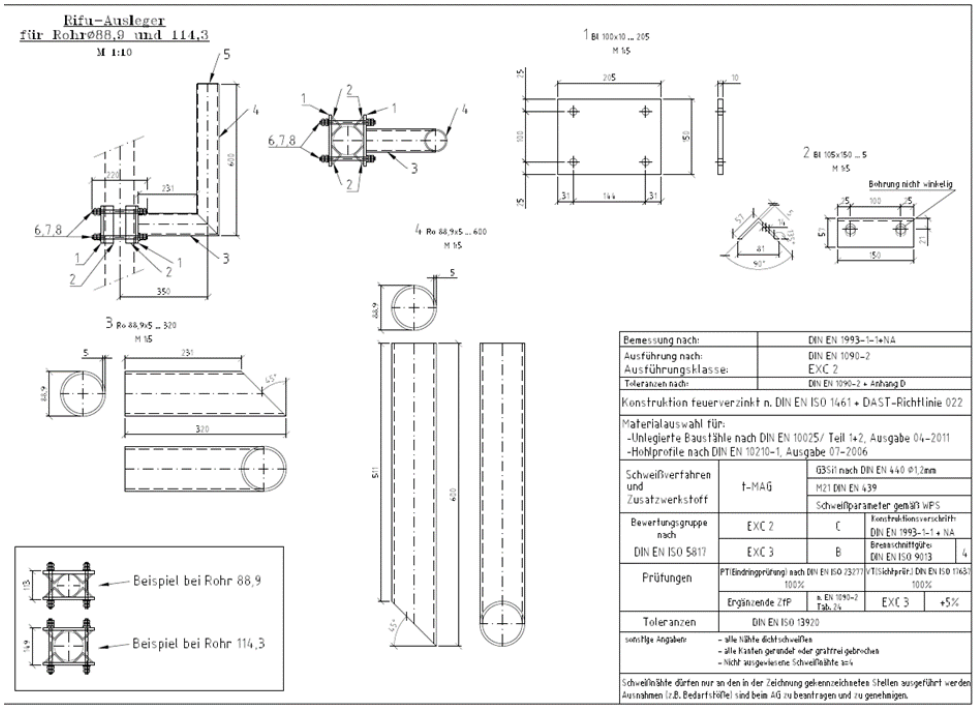

85. P401503 MN Transportation vehicle on ferry

NI-G-SL91102 Transportation of a vehicle/truck/lorry on a ferry.

Bill of Quantities

Pos	Task/Material	Qnt	Unit	Component	Remark
1	Used for moving passengers, vehicles/trucks/lorries and cargo across a river, lake, arm of the sea or other body of water.	1	site		**This item is an site specific adder in case of need to use ferry on a Island site.** **Note – this specific adder is ordered on top of the usual transport/travel positions**

86. P395202 M Antenna mount

NI-G-ML45635 Material for mounting bracket (up to 50kg) for passive antenna.

Bill of Quantities

Pos	Task/Material	Qnt	Unit	Component	Remark
1	Antenna bracket system	1	pcs		Including installation materials. **Up to 50kg steel** This material item is for the provision (ordering and delivery) of steel brackets for mounting of passive antennas. Price per bracket. Steel drawings provided by Nokia.

87. P395100 S Antenna bracket

NI-G-SL45650 Installation of mounting bracket for antenna.

Bill of Quantities

Pos	Task/Material	Qnt	Unit	Component	Remark
1	Installation of antenna bracket/mount.	1	pcs		Assume installation can be done by climbing portable ladder / scafffolding. Supply all required labour, tools, equipment, inspection testing and services necessary for the complete works in full conformity of requirements. Remove associated debris from site. Will be orered with material item Material for mounting bracket (<= 20kg) for passive antenna or Material for mounting bracket (up to 50kg) for passive antenna **Note – unlike item P394929, which is for RRH, this item describes the assembly of a "mount" / "holder" to an existing mast structure. The mounting of passive antennas to those brackets is part of item P441411**

88. P544135 S Cable Tray medium (pcs)

NI-G-SL43615 Installation of 1 C-rail (bar) as part of small cable tray.

Bill of Quantities

Pos	Task/Material	Qnt	Unit	Component	Remark
1	Installation of 1 pieces of C-rail (bar)	1	pcs		Supply all required labour, tools, equipment, inspection testing and services necessary for the complete works in full conformity of requirements. Remove associated debris from site. Note – per single C-bar. Number of required C-bars is identified in site survey incl. fixing material Needed in case of existing C-bars on site are too small or defective See also item P544136 for material
2					**C- rail (bars) are usually included in the „jumper/feeder/antenna items“** **This item c-rail is only ordere in case c-rails are needed but not jumper/feeder items are ordered by customer/Nokia**

89. P544136 M Cable Tray medium A - Type 1 (pcs)

NI-G-ML43615 Supply of 1 piece of C-rail (bar) (400/600 mm)

Bill of Quantities

Pos	Task/Material	Qnt	Unit	Component	Remark
1	Supply of C-rail (bar) 400/600 mm length	1	pcs		Note - The C-rails shall be galvanized (feuerverzinkt). In very special cases, V4A stainless steel shall be used. The fixing shall be done with stainless steel clamping rings (Edelspannbänder) with a lock. Worm threads are not allowed. Reference product is the Halfen HM422 or equal
2	Fixing material.	1	pcs		
3					C- rail (bars) are usually included in the „jumper/feeder/antenna items“ This item c-rail is only ordere in case c-rails are needed but not jumper/feeder items are ordered by customer/Nokia

90. P544265 TI RAN Inst Extra Work Mini WP add type2 “onsite HF VSWR/ RL Measurements per site”

NI-G-ML43600 VSWR / RL measurement.

Bill of Quantities

Pos	Task/Material	Qnt	Unit	Component	Remark
1	Execute onsite VSWR/RL measurement This item applies to the HF acceptance measurements, incl. documentation (Annex “Planning standard and Documentation Specifications” and Annex “Antenna Systems Acceptance Specification,” as amended).	1	**measurements per site**		VSWR (distance-to-fault measurement) measurement RL measurement as specified incl. documentation. (per site) Assumption: Mesurements (2 ports per RRH; 3 Sectors) -> per site Measurment protocol have to be uploaded via NDP to Nokia GDC.

91. P544264 TI RAN Inst Extra Work Mini WP add type1 “Onsite PIM measurements.”

NI-G-ML43600 Onsite PIM measurements

Bill of Quantities

Pos	Task/Material	Qnt	Unit	Component	Remark
1	Execute onsite PIM measurements This item includes the following PIM measurements: •a dynamic measurement on each of the HF cables to a port (+/-45°) with a termination resistor terminating the path (tapping only the connectors and not any of the HF cables) •and one static measurement at each of the HF cables (+/-45°) with antenna, including all jumpers and HF cables on a path to the antenna.	1	**per site**		The measurements are taken with a 800 **or** 900 measuring instrument. Preferably, a 900 measuring instrument should be used. incl. documentation measuring instrument that is suitable for measuring passive intermodulation (PIM) and complies with the requirements and the required PIM terminators (for calibration and measurement with termination resistor) must be provided by the Supplier. **See also customer document related to antenna measurements (RFQ-Doc-07):** **Antenna Systems Acceptance Specification**

92. P403107 Site Security

NI-G-SL51921 Site Security

Bill of Quantities

Pos	Task/Material	Qnt	Unit	Component	Remark
1	Verification of the area labelling according to the health and safety regulations (Exposition Area 1) Check controllable area (Exposition Area 2)	1	**site**		Valid for “Speed sites” only **Speed site= Site that is implemented before the NeMo (Netzmoderinsierung) project of DFMG (tower company) is finished.** The Supplier shall verify the labelling of the area according to the health and safety regulations. The new calculation for Exposition Area 1 needed is provided by DFMG to the Supplier. The Supplier shall then add the distances (from the DFMG calculation) on the sticker (also provided by DFMG) and stick it accordingly. Existing stickers shall be removed or pasted over. The new stickers shall be documented in the photo documentation. Exposition Area 2 is the area, which shall only be accessed by trained persons. This is why, a sticker must be at the site before/at the beginning of the controllable area indicating that the access is prohibited for not trained persons (“Zutritt für Unbefugte verboten”). Also, this area must be closed by key. Usually, this sticker is existent and the area is closed. However, this shall be verified by the Supplier and, if the sticker is missing, the DFMG shall be informed.
2	**Antenna direction (azimuth) and mechanical tilt values of the active (if needed) and passive antenna shall be evaluated and documented**				**Antenna direction (azimuth) and mechanical tilt values of the active (if needed) and passive antenna shall be evaluated and documented.** **(surcharge to site survey order for speed sites)** BeispielStempel für Blatt 6 als Ergebnis des Aufbaus, bitte Gradzahlen HSR eintragen): Sektor: x° / y° / z° mechanische Absenkung passive Antenne: 0° / 0° / 0° mechanische Absenkung aktive Antenne: 0° / 2° / 0° Zur Wartung Hubsteiger erforderlich ! — aktive Antenne: Nein / Nein / Nein passive Antenne: Nein / Nein / Nein abgesetztes Radio-Modul: Nein / Nein / Nein

93. P394690 Existing RT Tower strength analysis (Windload comparison)

NI-G-SL21311 Conduct a windload comparison

Bill of Quantities

Pos	Task/Material	Qnt	Unit	Component	Remark
1	Collect information based on project reports: which site antenna structure analysis is needed.	1	pcs		Existing static
2	Download Site design guidelines from NDP-D.	1	pcs		
3	Check tower stress status and capacity for tower elements and the bearing stresses and stability of the foundation.	1	pcs		Perform Windload comparison (no Static)
4	Create a report documenting tower stress status and capacity along with proposed non-strengthening solutions.	1	pcs		Perform Windload comparison report
10	Windload comparison reports to be signed by authorised persons.	1	pcs		German Stamp for approved static calculators
11	Upload files for Design activity.	1	pcs		

94. P394981 M Adaptor frame

1. NI-G-ML46770 Material for steel adaptor frame for equipment cabinets.

2. Bill of Quantities

Pos	Task/Material	Qnt	Unit	Component	Remark
1	Steel frame	1	pcs		manufacturing and delivery of Steel adaptor frame for AiO (AAOB) cabinet (clamp steel adapter)
2	Fixing accessories	1	pcs		
3	Earthing wire with accessories	1	pcs		

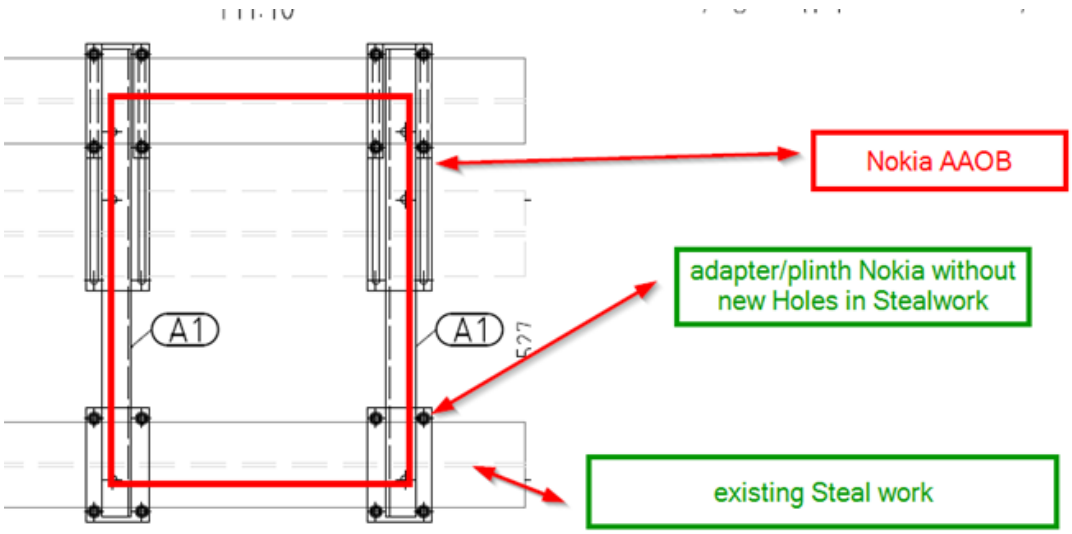

95. P394923 S Adaptor frame

NI-G-SL46770 Installation of steel adaptor frame for equipment cabinets.

Bill of Quantities

Pos	Task/Material	Qnt	Unit	Component	Remark
1	Steel frame installation	1	pcs		Supply all required labour, tools, equipment, inspection testing and services necessary for the complete works in full conformity of requirements. Remove associated debris from site.
2	Installation of equipment earthing wire with accessories	1	pcs		Inscluding connection to the site main grounding system and earthing bar

96. P454389 Removal battery string 48V up to 150 Ah

NI-G-SL59651 Removal of a battery string 48V up to 150A.

Bill of Quantities

Pos	Task/Material	Qnt	Unit	Component	Remark
1	Removal of a battery string.	1	lot		Incl. scrapping with disposal certificate

97. P534370 Removal power-transm cabling stand-alone.

NI-G-SL59931

Bill of Quantities

Pos	Task/Material	Qnt	Unit	Component	Remark
1	Removal of Fiber/DC cabling incl. Boxes (lumpsum per site)	1	site		Incl. disconnection transmission cable, removal of fixing material and label(s) at DDF/ODF/LAN panel if applicable. Mainly used for Fored site move / Wepla dismantling

98. P454399 Removal transmission cable up to 10m (max. 6 cables)

NI-G-SL59901

Removal of transmission cable up to 10m length (max. 6 cables)

Bill of Quantities

Pos	Task/Material	Qnt	Unit	Component	Remark
1	Removal of transmission (feeder or DC (raycap) cable.	**1**	**pcs**		Incl. disconnection transmission cable, removal of fixing material and label(s) at DDF/ODF/LAN panel if applicable. Includes scrapping via Supplier (raw material benefit can remain at supplier)
2					**Will be ordered for up to 6 X 10m (DC bundel cable; Raycap solution) or Feeder (not feederpair) cable** **(1 pcs= 1-6 cable (up to 10m lenth / per cable)**
3					**The removal of the first 10m are included in the basic packages (Nokia order item P534366 So this item is ordered if the cable length exceeds 10m and is ordered for each "started" 10m** **Note – in very exotic cases, where old, forgotten FO cables need to be removed, this cable is also added to the cable counting!**

Use cases:
6 Feeder cables - length 9m = item ordered 0x
6 feeder cables length 9m and 1 DC cable length 15m = ordered 1x
6 Feeder cables - length 25m = item ordered 2x
6 Feeder +2 DC – length 29m = item ordered 4x
6 Feeder length 29m +2 DC cable length 15m = item ordered 3x
12 Feeder +1 DC - length 52m = item ordered 15x

In case of distributed sites, with significant different difference between feeder length the "longest" feeder way applies.

99. P454400 Removal power cable <25mm^2 up to 10m

NI-G-SL59921 Removal of 25mm2 power cable up to 10m length.

3. Bill of Quantities

Pos	Task/Material	Qnt	Unit	Component	Remark
1	Removal of power cable.	10	m		Incl. disconnection
2					**Please note: Item will be only ordered (in very rare cases) for removal of DC cable in combination with forced site move or Removal WEPLA Main Service. For DC dismantling in case of a normal swap, order item P454399 Removal transmission cable up to 10m (max. 6 cables) will be ordered (see item above)**

100. P395251 S Free standing antenna support under 2m

NI-G-SL45328 Installation of free-standing antenna / RRH support with height under 2m, fixed on roof or wall.

4. Bill of Quantities

Pos	Task/Material	Qnt	Unit	Component	Remark
1	Ballasted / clemp or wall mounted roof pole system installation	1	pcs		RRH supporting structure (indoor or outdoor; cabinet based) / Transport to site and installation of one antenna support frame with pavement slab weighting (load stand solution) or clamp pole for RRU mounting; max. 75 kg) Incl. earthing of the pole. Additional Transport cost from DOP to site (if any) have to be included into this surcharge item)

101. P395287 M Free standing antenna support under 3m

NI-G-ML45328 Material for free standing antenna support

Bill of Quantities

Pos	Task/Material	Qnt	Unit	Component	Remark
1	roof pole system	1	pcs		manufacturing and delivery of antenna support frame with pavement slab weighting (load stand solution) or clamp pole for RRU mounting; max. 75 kg) (inclusive transport from steel manufacturer to supplier´s warehouse)
2	Cable mounting system	1	pcs		Incl. one time static calculation for the provided “standardized” poles.

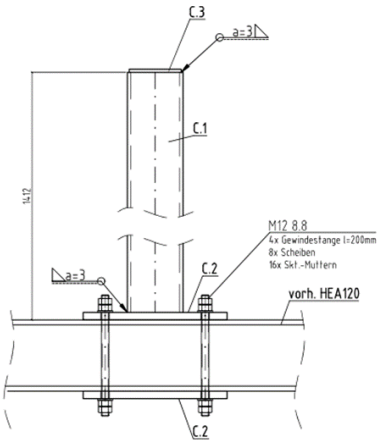

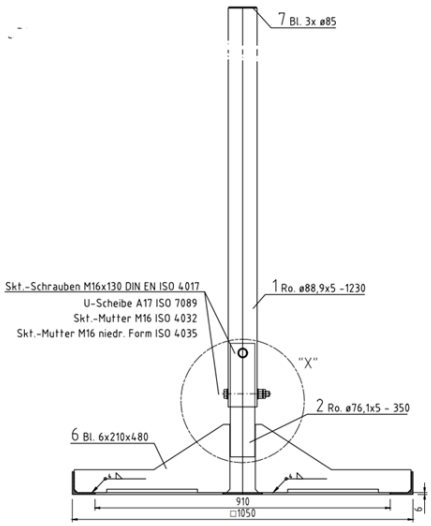

102. P578360 Removal antenna line jumper - Tower

NI-G-SL59822 Removal of antenna line jumper.

Bill of Quantities

Pos	Task/Material	Qnt	Unit	Component	Remark
1	Removal of antenna line jumper.	1	pcs		Incl. removal of fixing materials.

103. P534367 TI RAN Rigging Extra Work Small WP basic. (feeder cut)

Feeder cut

Bill of Quantities

Pos	Task/Material	Qnt	Unit	Component	Remark
1	"feeder cutting **or** DIN 7/16 connectors swap to 4.3-10 connectors (both ends)	1	**per 2 feeders**		(one feeder pair) Surcharge item without travel
2	Feeder VSWR/RL measurement	1	**per 2 feeders**		Scope similar to P544265 “onsite HF VSWR/ RL Measurements” Inclusive connector and earthing kit (if needed) material delivery by Subco

104. P544266 TI RAN Inst Extra Work Mini WP add type3.

NI-E-SL51935

This item will complete a Basic rollout package and will always ordered with a Main Rollout (new site/ upgrade site) order item.
Please note: All percentage values are non-binding information based on the experiences of the locations that have already been realized.

Bill of Quantities

Pos	Task/Material	Qnt	Unit	Component	Remark
1	**Temporary** opening and closing of fire bulkhead ("Brandschott") Laying cables through wall openings (wall ducts) (Mauerdurchführung)	1	lot	Lump sum per site (share)	e.g. open and closing of • CES – Implementation • "Gooseneck" (Schwanenhals) • Roxtec • Systems from the manufacturers MCT Brattberg, Hauff
~~2~~	~~Installation of AAOB or 19" cabinet~~	~~1~~	~~pcs~~	~~Lump sum per site~~	~~up to **1%** of the cases~~ ~~Scope similar to SI 401520 or indoor 19" cabinet installation.~~
3	Installation of the PDU Raycap RTP-1317	1	pcs	Lump sum per site	**up to 1%** Scope similar to SI P548880)
4	In case of **upgrade**, Deinstallation / Installation (movement) of the PDU ~~Raycap RTP-1317~~ and or reconstruction of DC Jumpers, if necessary Movment of **FO panel** (insite the rack)	1	pcs	Lump sum per site	**up to 1%** **Upgrade= Nokia site extension e.g. with Active antennas**
5	In case of an **upgrade**, movement of FTTA (Single Mode) / PTTA boxes (near by the antenna).	1	lot	Lump sum per site	**up to 5%** of the upgrade sites FO cable must not be shortened or extended
~~6~~	~~In case of an upgrade, dismantling of Multimode FTTA cabling and FTTA Box~~	~~1~~	~~lot~~	~~Lump sum per site~~	~~up to 0% of the upgrade sites~~ ~~New installation of Singlemode FTTA cabling is not part of this item.~~
~~7~~	~~C-Rail expansions (delivery and installation) (if needed)~~	~~1~~	~~lot~~	~~Lump sum per site~~	~~Up to 80% of the sites (**average 3 pcs per site).**~~ ~~(incl. Material descriped in Item P544136)~~ **-> shifted to jumper / RRH / MAA installation order item**
8	Free Climber (if needed)	1	lot		
9	**Documentation / quality check**	**1**	**lot**		**Red pen correction of EP (if needed)** **Execute site quality check with GDC after installation .**

					Report the test results via NDPd (photo documentation as word / pdf file, quality check list)

105. P534366 TI RAN Inst Extra Work Small WP basic

NI-E-SL51931

This item will complete a Basic modernization (swap) package and will always ordered with a Main Modernization order item.
Please note: All percentage values are non-binding information based on the experiences of the locations that have already been realized.

Bill of Quantities

Pos	Task/Material	Qnt	Unit	Component	Remark
1	**Temporary** opening and closing of fire bulkhead ("Brandschott") Laying cables through wall openings (wall ducts) (Mauerdurchführung)	1	lot	Lump sum per site (share)	e.g. open and closing of • CES – Implementation • "Gooseneck" (Schwanenhals) • Roxtec • Systems from the manufacturers MCT Brattberg, Hauff
~~2~~	~~Dismantling of all multimode FO FTTA cabling and Raycap FO cables/boxes~~	~~1~~	~~lot~~	~~Lump sum per site~~	~~**up to 50% of the cases**~~ ~~New installation of Singlemode FTTA cabling is not part of this item and will be orded withhin an sep. order item.~~
3	Feeder dismantling (up to 10m)	1	lot	Lump sum per site	**up to 1%** Feeders up to 10m will be replaced by a jumper if economically reasonable (to avoid connector change to 4.3-10).
4	In case of a change from cabinet based site to distributed site: dismantling of all DC / FO cables to RU units (normaly insite the rack or near by the Baseband) Jumper / **Feeder dismantling up to 10m**	1	lot	Lump sum per site	**Up to 20%** cabinet based= refers to deployment of a Base Station Equipment in a cabinet (Radio module units and baseband together), cabinet itself can be indoor or outdoor Rack dismantling is not included in the item and will be orded via item P534372 Removal cabinet stand-alone
~~5~~	~~Installation of AAOB or 19" cabinet~~	~~1~~	~~pcs~~	~~Lump sum per site~~	~~**up to 10%** of the cases~~ ~~Scope similar to SI 401520 or indoor 19" cabinet installation.~~ ~~(P401524 for Installation Material)~~
6	New installation of the Raycap PDU (indoor DC distribution box e.g. RTP-1317)	1	pcs	Lump sum per site	**up to 25% Scope similar to SI P548880)** **(inclusive Material delivery of 25mm² DC (e.g. SL2C25MM2 FRNC-S-BK-Rcable; average cable lenth 3X1,5m)**

7	Deinstallation of HUA **DCDU at top of cabinet/ reconstruction of DC** Jumpers to existing PDU at the bottom of the cabinet Movment of FO panel (insite the rack)	1	pcs	Lump sum per site	**up to 50% of the cases**
8	Movement of FTTA (Single Mode) / PTTA boxes (near by the antenna).	1	lot	Lump sum per site	**up to 5%** of the upgrade sites FO cable must not be shortened or extended.
~~9~~	~~C-Rail expansions (delivery and installation) (if needed)~~	~~1~~	~~lot~~	~~Lump sum per site~~	~~Up to 80% of the sites (average 3 pcs per site).~~ ~~**average 6 per site**~~ ~~(incl. Material descriped in Item P544136~~**)** **-> shifted to jumper / RRH / MAA order item**
10	Downtime reduction	1	lot		The Supplier takes reasonable efforts to reduce downtime (e.g. in all cases where it is possible, the basic layer shall not be deactivated or temporary adaptors/cabling is used to reactivate as soon as possible the basic layer)
11	Free Climber (if needed)	1	lot		
12	**Documentation / quality check**	**1**	**lot**		**Red pen correction of AP (if needed)** **Execute site quality check with GDC after installation .** **Report the test results via NDPd (photo documentation, quality check list)**
13	**Movement of existing RF- Jumper (if needed)**	**1**	**lot**		**Movement of existing RF- Jumper to new installed Radio Unit.**
14	**Material delivery and installation of Kat5e ethernet cable (2m)**	**1**	**pcs**		**less than 5% of the swap sites** **Material delivery and installation of Kat5e ethernet cable (2m) for Baseband transmission connection (no fiber transmission availible on site)**

106. P377724 Site Survey remote (desktop study)

NI-G-SR20102 Provide site deployment information for simple cases which do not require onsite TSS.

Bill of Quantities

Pos	Task/Material	Qnt	Unit	Component	Remark
1	Collect TSS inputs (As-Built, co-user documentation, structural reports, customer drawings) & Verify all relevant documents and images	1	pcs		No site visit.
2	Study documents in terms of site design layout & target solution	1	pcs		
3	Discuss TSS inputs with customer and get inputs validated	1	pcs		
4	Create installation material order proposal based on list of available materials provided by Nokia				
5	Fill in DC Power Supply details & current info (if any)	1	pcs		
6	Fill in Grounding-Lighting Protection details & current info (if any)	1	pcs		
7	Cite External Alarms details & current info (if any)	1	pcs		
8	Fill in Antenna system and DC and FO system installed on site (trunk cables, boxes etc.)details	1	pcs		
9	Provide Health and Safety requirements (if needed)	1	pcs		
11	Provide Transmission details & current info (if any)	1	pcs		
12	Describe Site Room environment	1	pcs		
13	Fill in Cable Management System details	1	pcs		
14	Submit report in NDPd	1	pcs		

107. P394665 "Site Survey full scope

NI-G-SL20301 Conduct a full scope Technical Site Survey (TSS) covering TI.

Bill of Quantities

Pos	Task/Material	Qnt	Unit	Component	Remark
1	Participation in Technical Site Survey.	1	pcs		**This item covers all the required tasks and measures to be completed as a basis for successful TI site design.** **Includes Verification of the existing relevant documentation, and real site conditions.** **Check reality vs existing documents** **(red pencil correction; if needed)**
2	Preparation of Technical Site Survey Report including photographs (if applicable) and site survey checklist.	1	pcs		**Site Sketch and photographs to be provided as part of the TSSR/SSCL.** **Validation and Update of SSTI, if needed**
3	Verification of the existing relevant documentation, and real site conditions.	1	pcs		**Check if controllable Area is properly marked** **Analysis whether cherry pickers / cranes are needed for antenna maintenance and installation.** **Check requirements for road blocking**
4	Define list of necessary materials and their quantity and all information needed for site design. Fill in Nokia materials list attachment	1	pcs		

108. P454395 Removal Antenna Ancillaries (lump sum per site)

NI-G-SL59815 Removal Antenna Ancillaries (lump sum per site)

Bill of Quantities

Pos	Task/Material	Qnt	Unit	Component	Remark
1	Removal of passive components within antenna line, e.g. combiner, splitter etc.	1	site	**lumps sum per site**	De- installation of all Combiner (per site) Incl. disconnecting of antenna line Removal of 4.3 / 7_16 adapter between combiner and jumper (if needed) Removal (and scrapping) of all (additional) Jumper between Combiner and Feeder (C2D only) (Deinstallation of HF- Jumper between combiner and legacy Radios are already included in the Basis Modernization Service) Please note:

109. P534369 TI ES Inst Extra Work Small WP basic (I Flexi BS power module)

NI-E-SL51951 Installation of Flexi base station power supply (FPRB)

Bill of Quantities

Pos	Task/Material	Qnt	Unit	Component	Remark
1	Delivery and Installation of Flexi BS Power Module	1	pcs		Installation of Flexi base station power module with front and back covers if applicable Insertion of Rectifier Installation of grounding cable between Flexi base station power module and plinth with fixing accessories (cable ties) Installation of AC power cable with fixing accessories (cable ties), labels and connectors (shoes) up to 10m including testing of the complete cable run Installation of internal Databus cable with fixing accessories (cable ties) Installation of label for AC breakers Please assume outdoor installation at existing plinth or pole mount.
2	DGU V3 measurement	1	pcs		Incl. protocol (file send via NDP)
3	Material supply of Grounding cable	1	Pcs		
4	Material supply of AC Power Cable	1	Pcs		Up to 10m

FPRB with/without Flexi Covers (FMCA)

110. P401524 InstM Flexi BS outdoor cab compact

NI-G-ML54005 Installation materials for Flexi base station outdoor cabinet compact (AAOB).

Bill of Quantities

Pos	Task/Material	Qnt	Unit	Component	Remark
1	Supply of fixing materials.	1	pcs		Cabinet fixing material which is suitable for the particular floor or wall fixing.
2	Supply of grounding cable	2	m	average	H07V-K 1x16² green/yellow or simuar DT released grounding cable.
3	Supply of **6mm² or**25mm² DC power cable	3X 5	m	average	Rosenberger SL2CxxMM2 FRNC-S-BK-R or simuar DT released **6mm² or** 25mm² DC cable.(average cable lenth 3X5m) ➔ **6mm² cable in 80% of the cases.**
4					Optical fiber cables will be delivered by Nokia

111. P544267 TI RAN Rigging Extra Work Mini WP add (Dismantling of all multimode FO)

NI-E-SL51938 Dismantling of all multimode FO

Bill of Quantities

Pos	Task/Material	Qnt	Unit	Component	Remark
1	**Dismantling of all multimode FO FTTA cabling and Raycap FO cables/boxes**	**1**	**lot**	**Lump sum per site**	**New installation of Singlemode FTTA cabling is not part of this item and will be orded withhin an sep. order item.**
2					**Item will be always ordered together with an "siglemode fiber installtion; "Raycap" fiber cable swap)** **New installation of Singlemode FTTA cabling is not part of this item and will be orded withhin an sep. order item.**

112. P520584 Xhaul Local Link Acceptance per site (quality check)

NI-G-SL57619 Surcharge Site Quality audit (optional item)

Bill of Quantities

Pos	Task/Material	Qnt	Unit	Component	Remark
1	This surcharge covers the additional “on site” effortss for a remote quality audit (according to DT guidelines) done together with Nokia GDC.	1	pcs		GDC runs the a Site quality audit tests and validates the links status. (on top of Nokia quality Self assassment)
2	Report the test results via NDPd.	1	pcs		

SMC Service for Subco ordering only:

113. P568121 Pre-build special procedure (SMC BBU exchange

NI-G-SL54911 Pre-build special procedure (SMC BBU exchange)

Bill of Quantities

Pos	Task/Material	Qnt	Unit	Component	Remark
1	This item will be ordered if there is a need for a second site visit during SMC period in case of a baseband failure.	1	site		Scope: Travel to site (scope simular to item P540636 Travel 1 person including spare part transport) Connection to BTS via AnyDesk application BBU or any BBU card exchange (material fom supplier spare pool) Basic call tests Return faulty HW to HWS (Nokia Hardware Service) **Lead time 2 working days**
2	Report the test results via NDPd.	1	pcs		

114. P568115 Pre-build Installation Radio (SMC RRH exchange

NI-G-SL54901 Pre-build special procedure (SMC RRH exchange)

Bill of Quantities

Pos	Task/Material	Qnt	Unit	Component	Remark
1	This item will be ordered if there is a need for a second site visit in case of a RRH / MAA failure.	1	site		Scope: Travel to site (scope simular to item P540637Travel RAN team; including spare part transport) Connection to BTS via AnyDesk application RRH or active antenna exchange ((material fom supplier spare pool) Basic call tests: One CS call One PS call; (for the sector/layer affected by intervention e.g. module replacement) Return faulty HW to HWS (Nokia Hardware Service) **Lead time 2 working days**
2	Report the test results via NDPd.	1	pcs		

115. P568118 Pre-build Installation Antenna (SMC Jumper/transmission cable exchange

NI-G-SL54903 Pre-build Installation Antenna (SMC Jumper/transmission cable exchange)

Bill of Quantities

Pos	Task/Material	Qnt	Unit	Component	Remark
1	This item will be ordered if there is a need for a second site visit in case of a expected "cabling" failure.	1	site		Scope: Travel to site (scope simular to item P540637Travel RAN team; including spare part transport) Connection to BTS via AnyDesk application FO, RF or transmission jumper cable exchange Basic call tests: One CS call One PS call; (for the sector/layer affected by intervention e.g. module replacement) **Lead time 2 working days**
2	Report the test results via NDPd.	1	pcs		