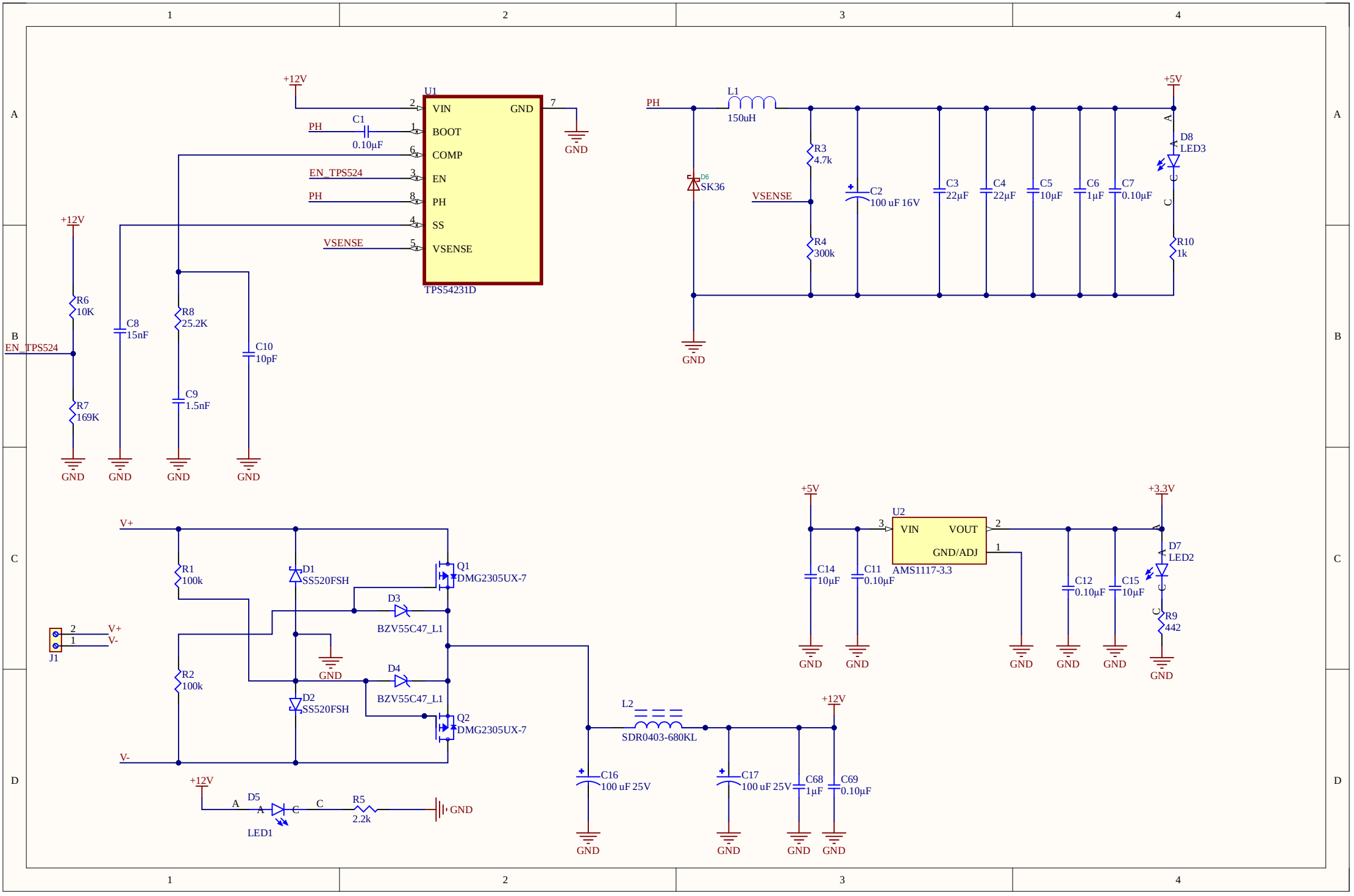
U1
VIN
GND
BOOT
COMP
EN
PH
SS
VSENSE
TPS54231D
+12V
PH
C1
0.10µF
EN_TPS524
VSENSE
GND
R6
10K
R7
169K
C8
15nF
R8
25.2K
C9
1.5nF
C10
10pF
L1
150uH
R3
4.7k
R4
300k
D6
SK36
C2
100 uF 16V
C3
22µF
C4
22µF
C5
10µF
C6
1µF
C7
0.10µF
+5V
D8
LED3
R10
1k
V+
V-
J1
R1
100k
R2
100k
D1
SS520FSH
D2
SS520FSH
Q1
DMG2305UX-7
Q2
DMG2305UX-7
D3
BZV55C47_L1
D4
BZV55C47_L1
L2
SDR0403-680KL
C16
100 uF 25V
C17
100 uF 25V
C68
1µF
C69
0.10µF
D5
LED1
R5
2.2k
U2
VIN
VOUT
GND/ADJ
AMS1117-3.3
C14
10µF
C11
0.10µF
C12
0.10µF
C15
10µF
+3.3V
D7
LED2
R9
442

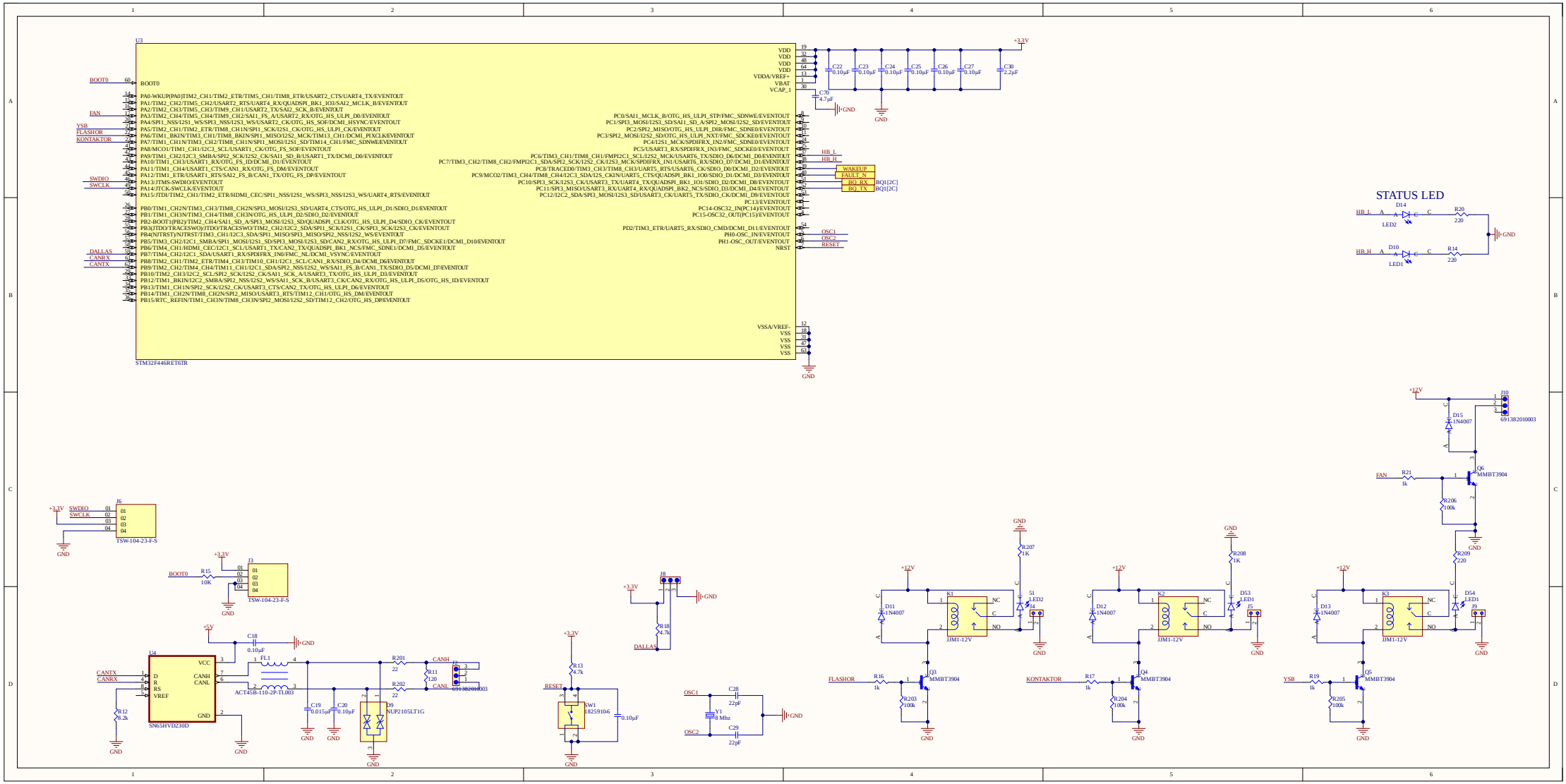
U3
STM32F446RET6TR
BOOT0
PA0-WKUP(PA0)TIM2_CH1/TIM2_ETR/TIM5_CH1/TIM8_ETR/USART2_CTS/UART4_TX/EVENTOUT
PA1/TIM2_CH2/TIM5_CH2/USART2_RTS/UART4_RX/QUADSPI_BK1_IO3/SAI2_MCLK_B/EVENTOUT
PA2/TIM2_CH3/TIM5_CH3/TIM9_CH1/USART2_TX/SAI2_SCK_B/EVENTOUT
PA3/TIM2_CH4/TIM5_CH4/TIM9_CH2/SAI1_FS_A/USART2_RX/OTG_HS_ULPI_D0/EVENTOUT
PA4/SPI1_NSS/I2S1_WS/SPI3_NSS/I2S3_WS/USART2_CK/OTG_HS_SOF/DCMI_HSYNC/EVENTOUT
PA5/TIM2_CH1/TIM2_ETR/TIM8_CH1N/SPI1_SCK/I2S1_CK/OTG_HS_ULPI_CK/EVENTOUT
PA6/TIM1_BKIN/TIM3_CH1/TIM8_BKIN/SPI1_MISO/I2S2_MCK/TIM13_CH1/DCMI_PIXCLK/EVENTOUT
PA7/TIM1_CH1N/TIM3_CH2/TIM8_CH1N/SPI1_MOSI/I2S1_SD/TIM14_CH1/FMC_SDNWE/EVENTOUT
PA8/MCO1/TIM1_CH1/I2C3_SCL/USART1_CK/OTG_FS_SOF/EVENTOUT
PA9/TIM1_CH2/I2C3_SMBA/SPI2_SCK/I2S2_CK/SAI1_SD_B/USART1_TX/DCMI_D0/EVENTOUT
PA10/TIM1_CH3/USART1_RX/OTG_FS_ID/DCMI_D1/EVENTOUT
PA11/TIM1_CH4/USART1_CTS/CAN1_RX/OTG_FS_DM/EVENTOUT
PA12/TIM1_ETR/USART1_RTS/SAI2_FS_B/CAN1_TX/OTG_FS_DP/EVENTOUT
PA13/JTMS-SWDIO/EVENTOUT
PA14/JTCK-SWCLK/EVENTOUT
PA15/JTDI/TIM2_CH1/TIM2_ETR/HDMI_CEC/SPI1_NSS/I2S1_WS/SPI3_NSS/I2S3_WS/UART4_RTS/EVENTOUT
PB0/TIM1_CH2N/TIM3_CH3/TIM8_CH2N/SPI3_MOSI/I2S3_SD/UART4_CTS/OTG_HS_ULPI_D1/SDIO_D1/EVENTOUT
PB1/TIM1_CH3N/TIM3_CH4/TIM8_CH3N/OTG_HS_ULPI_D2/SDIO_D2/EVENTOUT
PB2-BOOT1(PB2)/TIM2_CH4/SAI1_SD_A/SPI3_MOSI/I2S3_SD/QUADSPI_CLK/OTG_HS_ULPI_D4/SDIO_CK/EVENTOUT
PB3(JTDO/TRACESWO)/JTDO/TRACESWO/TIM2_CH2/I2C2_SDA/SPI1_SCK/I2S1_CK/SPI3_SCK/I2S3_CK/EVENTOUT
PB4(NJTRST)/NJTRST/TIM3_CH1/I2C3_SDA/SPI1_MISO/SPI3_MISO/SPI2_NSS/I2S2_WS/EVENTOUT
PB5/TIM3_CH2/I2C1_SMBA/SPI1_MOSI/I2S1_SD/SPI3_MOSI/I2S3_SD/CAN2_RX/OTG_HS_ULPI_D7/FMC_SDCKE1/DCMI_D10/EVENTOUT
PB6/TIM4_CH1/HDMI_CEC/I2C1_SCL/USART1_TX/CAN2_TX/QUADSPI_BK1_NCS/FMC_SDNE1/DCMI_D5/EVENTOUT
PB7/TIM4_CH2/I2C1_SDA/USART1_RX/SPDIFRX_IN0/FMC_NL/DCMI_VSYNC/EVENTOUT
PB8/TIM2_CH1/TIM2_ETR/TIM4_CH3/TIM10_CH1/I2C1_SCL/CAN1_RX/SDIO_D4/DCMI_D6/EVENTOUT
PB9/TIM2_CH2/TIM4_CH4/TIM11_CH1/I2C1_SDA/SPI2_NSS/I2S2_WS/SAI1_FS_B/CAN1_TX/SDIO_D5/DCMI_D7/EVENTOUT
PB10/TIM2_CH3/I2C2_SCL/SPI2_SCK/I2S2_CK/SAI1_SCK_A/USART3_TX/OTG_HS_ULPI_D3/EVENTOUT
PB12/TIM1_BKIN/I2C2_SMBA/SPI2_NSS/I2S2_WS/SAI1_SCK_B/USART3_CK/CAN2_RX/OTG_HS_ULPI_D5/OTG_HS_ID/EVENTOUT
PB13/TIM1_CH1N/SPI2_SCK/I2S2_CK/USART3_CTS/CAN2_TX/OTG_HS_ULPI_D6/EVENTOUT
PB14/TIM1_CH2N/TIM8_CH2N/SPI2_MISO/USART3_RTS/TIM12_CH1/OTG_HS_DM/EVENTOUT
PB15/RTC_REFIN/TIM1_CH3N/TIM8_CH3N/SPI2_MOSI/I2S2_SD/TIM12_CH2/OTG_HS_DP/EVENTOUT
PC0/SAI1_MCLK_B/OTG_HS_ULPI_STP/FMC_SDNWE/EVENTOUT
PC1/SPI3_MOSI/I2S3_SD/SAI1_SD_A/SPI2_MOSI/I2S2_SD/EVENTOUT
PC2/SPI2_MISO/OTG_HS_ULPI_DIR/FMC_SDNE0/EVENTOUT
PC3/SPI2_MOSI/I2S2_SD/OTG_HS_ULPI_NXT/FMC_SDCKE0/EVENTOUT
PC4/I2S1_MCK/SPDIFRX_IN2/FMC_SDNE0/EVENTOUT
PC5/USART3_RX/SPDIFRX_IN3/FMC_SDCKE0/EVENTOUT
PC6/TIM3_CH1/TIM8_CH1/FMPI2C1_SCL/I2S2_MCK/USART6_TX/SDIO_D6/DCMI_D0/EVENTOUT
PC7/TIM3_CH2/TIM8_CH2/FMPI2C1_SDA/SPI2_SCK/I2S2_CK/I2S3_MCK/SPDIFRX_IN1/USART6_RX/SDIO_D7/DCMI_D1/EVENTOUT
PC8/TRACED0/TIM3_CH3/TIM8_CH3/UART5_RTS/USART6_CK/SDIO_D0/DCMI_D2/EVENTOUT
PC9/MCO2/TIM3_CH4/TIM8_CH4/I2C3_SDA/I2S_CKIN/UART5_CTS/QUADSPI_BK1_IO0/SDIO_D1/DCMI_D3/EVENTOUT
PC10/SPI3_SCK/I2S3_CK/USART3_TX/UART4_TX/QUADSPI_BK1_IO1/SDIO_D2/DCMI_D8/EVENTOUT
PC11/SPI3_MISO/USART3_RX/UART4_RX/QUADSPI_BK2_NCS/SDIO_D3/DCMI_D4/EVENTOUT
PC12/I2C2_SDA/SPI3_MOSI/I2S3_SD/USART3_CK/UART5_TX/SDIO_CK/DCMI_D9/EVENTOUT
PC13/EVENTOUT
PC14-OSC32_IN(PC14)/EVENTOUT
PC15-OSC32_OUT(PC15)/EVENTOUT
PD2/TIM3_ETR/UART5_RX/SDIO_CMD/DCMI_D11/EVENTOUT
PH0-OSC_IN/EVENTOUT
PH1-OSC_OUT/EVENTOUT
NRST
VSSA/VREF-
VDD
VDD
VDD
VDD
VDDA/VREF+
VBAT
VCAP_1
VSS
VSS
VSS
VSS
+3.3V
C22 0.10µF
C23 0.10µF
C24 0.10µF
C25 0.10µF
C26 0.10µF
C27 0.10µF
C30 2.2µF
C70 4.7µF
GND
HB_L
HB_H
WAKEUP
FAULT_N
BQ_RX
BQ_TX
BQ1[2C]
OSC1
OSC2
RESET
STATUS LED
D14
LED2
R30 220
D10
LED1
R14 220
FAN
FLASHOR
KONTAKTOR
YSB
DALLAS
CANRX
CANTX
SWDIO
SWCLK
J6
TSW-104-23-F-S
J3
R15 10K
+5V
C18 0.10µF
U4
SN65HVD230D
VCC
D
R
RS
VREF
CANH
CANL
FL1
ACT45B-110-2P-TL003
R201 22
R202 22
R11 120
J2
691382010003
C19 0.015µF
C20 0.10µF
D9
NUP2105LT1G
R12 8.2k
J8
R10 4.7k
R13 4.7k
RESET
SW1
18259106
0.10µF
OSC1
OSC2
C28 22pF
C29 22pF
Y1 8 Mhz
+12V
D11 1N4007
K1
JJM1-12V
NC
NO
R207 1K
S1 LED2
J4
Q3 MMBT3904
R16 1k
R203 100k
D12 1N4007
K2
R208 1K
D53 LED1
J5
Q4 MMBT3904
R17 1k
R204 100k
D13 1N4007
K3
R209 220
D54 LED1
J9
Q5 MMBT3904
R19 1k
R205 100k
J10
691382010003
D15 1N4007
Q6 MMBT3904
R21 1k
R206 100k

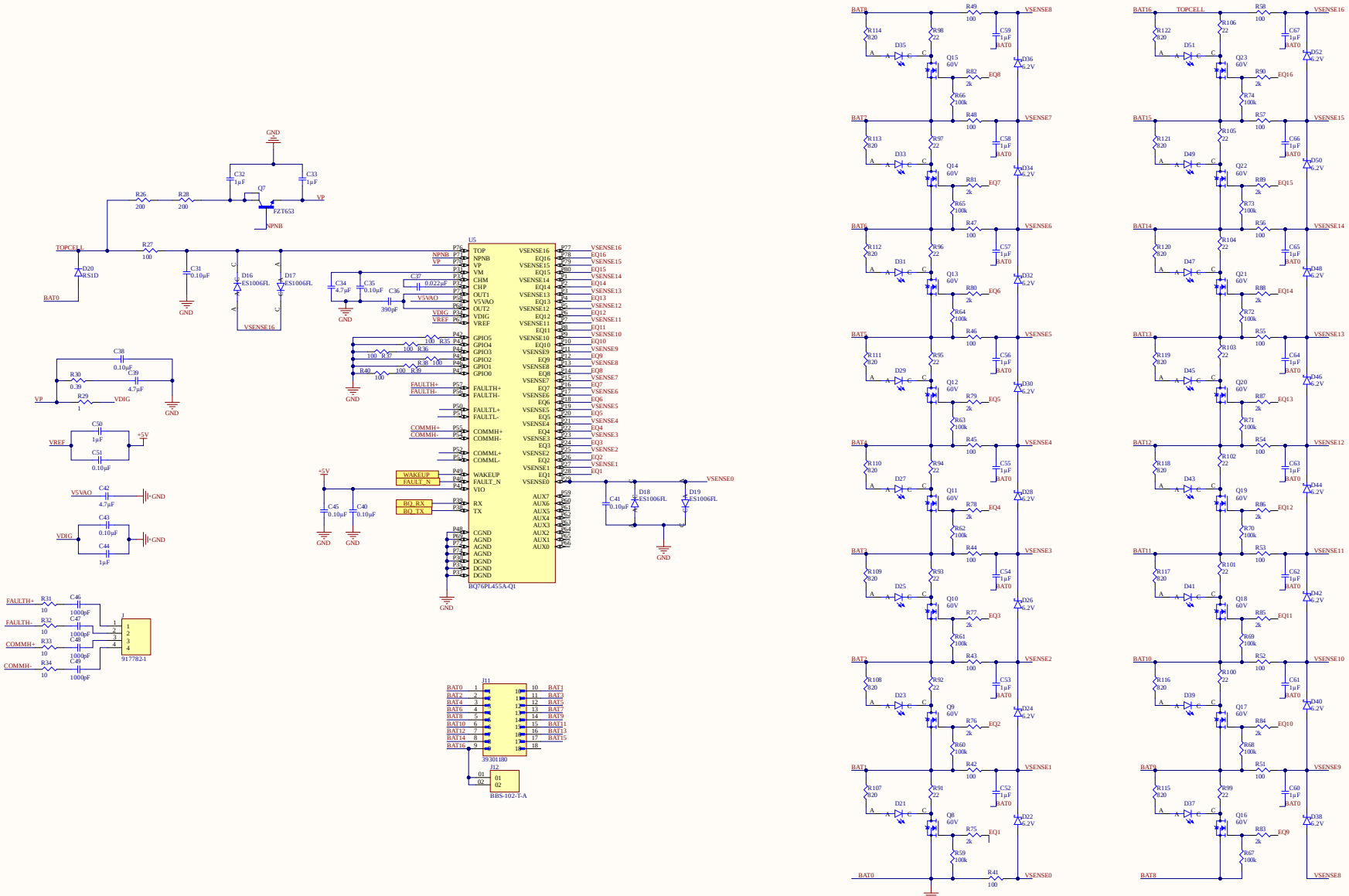

Title

Size	Number	Revision
A4		

Date: 3.17.2024 Sheet of

File: C:\Users\...\BQ1.SchDoc Drawn By:

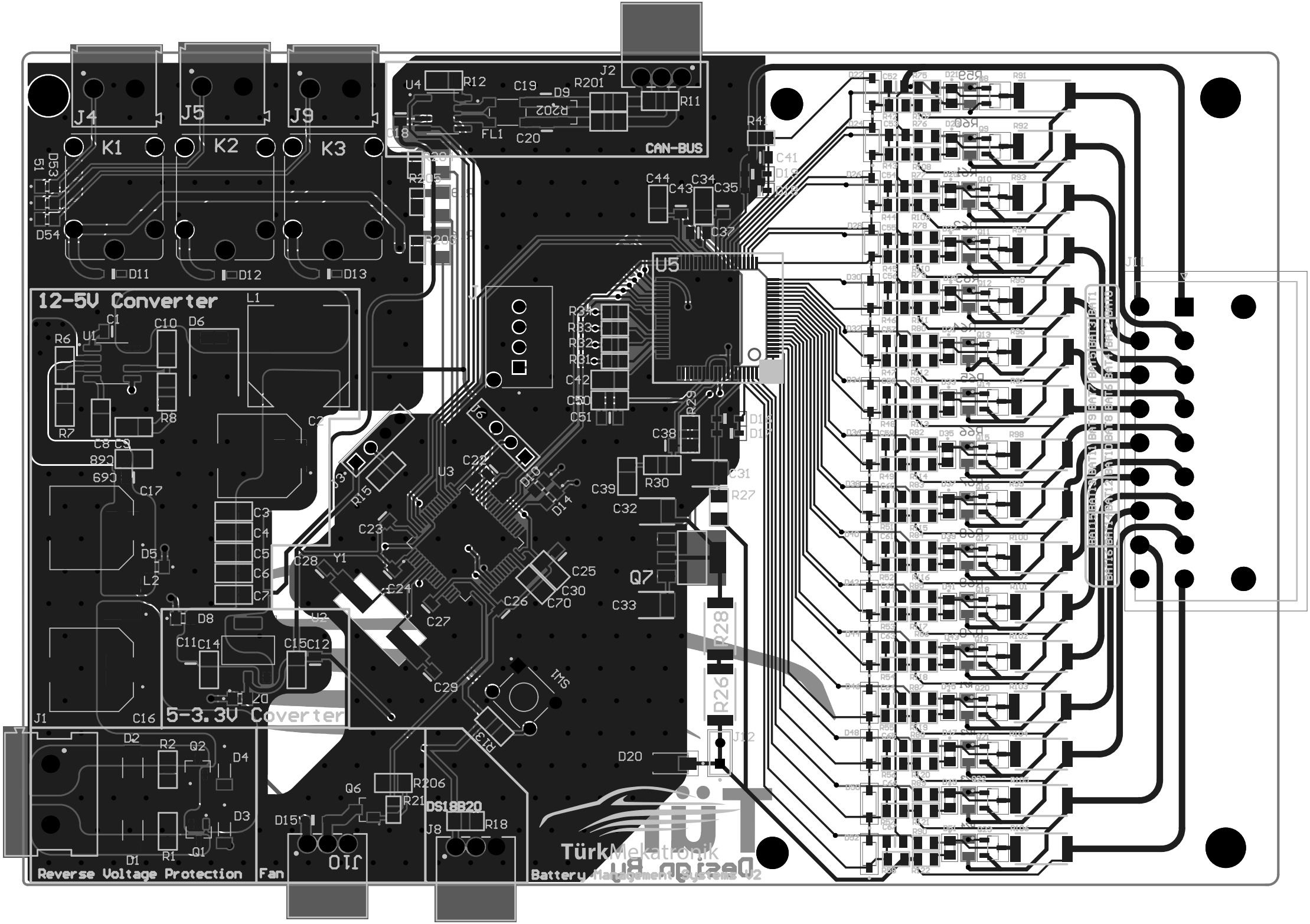
J4
J5
J9
K1
K2
K3
CAN-BUS
12-5V Converter
5-3.3V Coverter
Reverse Voltage Protection
Fan
DS18B20
Battery Management Systems V2
TürkMekatronik
Design By

Component	Description	Designator	Footprint	LibRef	Quantity
0.22µF	CAP C0805 22UF 50V X7R 0805	C1, C2, C3, C4, C5, C6, C7, C8, C9, C10, C11, C12, C13, C14, C15, C16, C17, C18, C19, C20, C21, C22, C23, C24, C25, C26, C27, C28, C29, C30, C31, C32, C33, C34, C35, C36, C37, C38, C39, C40,