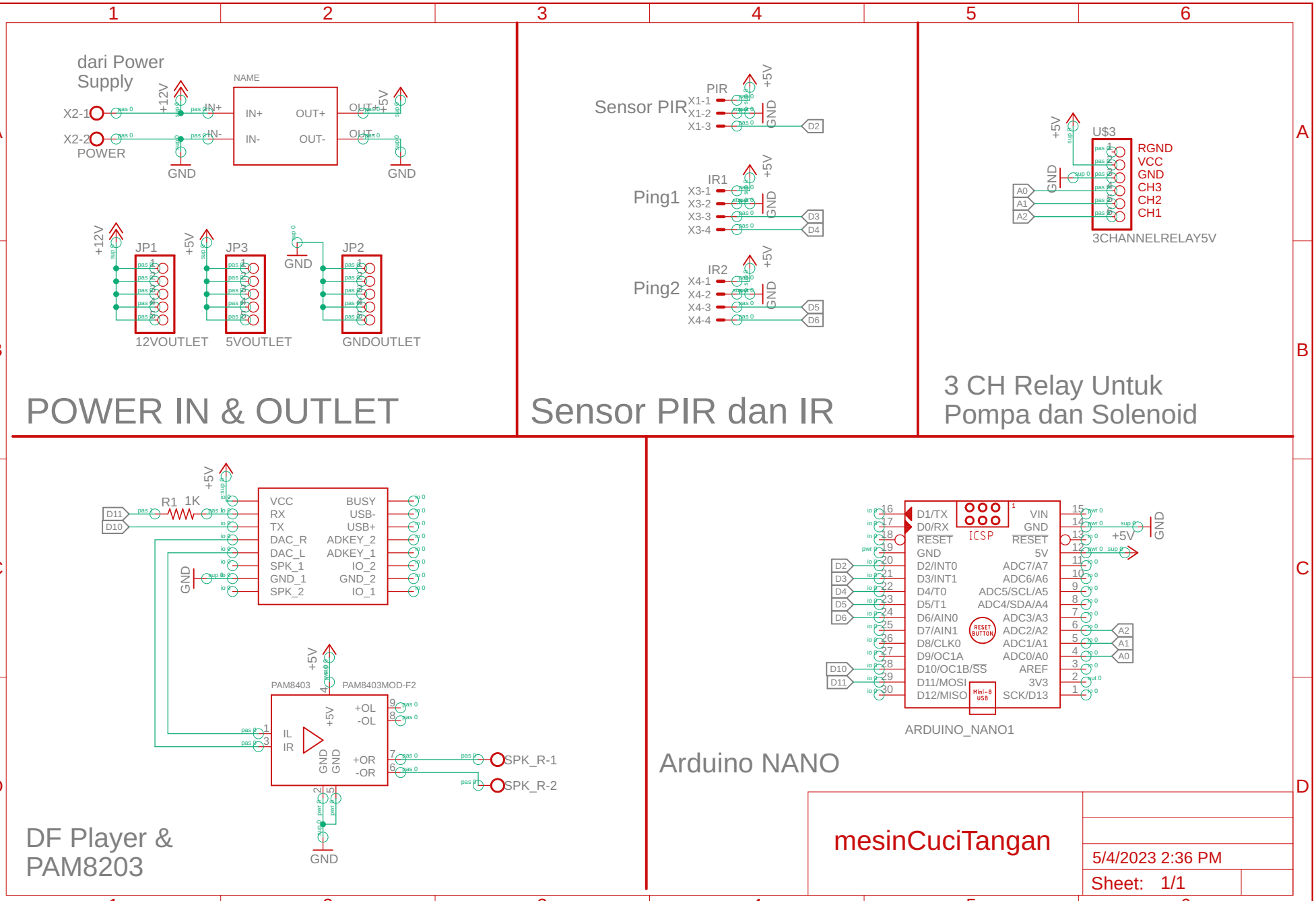
dari Power Supply
X2-1
X2-2
POWER
+12V
GND
NAME
IN+
IN-
OUT+
OUT-
+5V
JP1
JP3
JP2
12VOUTLET
5VOUTLET
GNDOUTLET
POWER IN & OUTLET
Sensor PIR
PIR
X1-1
X1-2
X1-3
D2
Ping1
IR1
X3-1
X3-2
X3-3
X3-4
D3
D4
Ping2
IR2
X4-1
X4-2
X4-3
X4-4
D5
D6
Sensor PIR dan IR
U$3
RGND
VCC
GND
CH3
CH2
CH1
A0
A1
A2
3CHANNELRELAY5V
3 CH Relay Untuk Pompa dan Solenoid
D11
D10
R1 1K
VCC
RX
TX
DAC_R
DAC_L
SPK_1
GND_1
SPK_2
BUSY
USB-
USB+
ADKEY_2
ADKEY_1
IO_2
GND_2
IO_1
PAM8403
PAM8403MOD-F2
IL
IR
+OL
-OL
+OR
-OR
SPK_R-1
SPK_R-2
DF Player & PAM8203
D1/TX
D0/RX
RESET
GND
D2/INT0
D3/INT1
D4/T0
D5/T1
D6/AIN0
D7/AIN1
D8/CLK0
D9/OC1A
D10/OC1B/SS
D11/MOSI
D12/MISO
ICSP
RESET BUTTON
Mini-B USB
VIN
GND
RESET
5V
ADC7/A7
ADC6/A6
ADC5/SCL/A5
ADC4/SDA/A4
ADC3/A3
ADC2/A2
ADC1/A1
ADC0/A0
AREF
3V3
SCK/D13
ARDUINO_NANO1
Arduino NANO
mesinCuciTangan
5/4/2023 2:36 PM
Sheet: 1/1