This article has been accepted for publication in IEEE Transactions on Cloud Computing. This is the author's version which has not been fully edited and content may change prior to final publication. Citation information: DOI 10.1109/TCC.2026.3656828

Blockchain Authorized Privacy-Preserving Framework Using Edge Computing for the Cloud-Assisted Internet of Medical Things

B D Deebak, Seong Oun Hwang*, *Senior Member, IEEE*

***Abstract*—Recent advancements in mobile cloud computing demand a proper constitution of security components including authentication, authorization, and access control to prevent unauthorized data access. Most computing environments like healthcare handle massive amounts of data generated by the Internet of Medical Things (IoMT) like programmable pacemakers and connect a system of supporting infrastructure to manage the delivery of sensitive information over dedicated networks. Despite its development in various end-user applications (e.g., supply chains and logistics), cloud-IoMT device security and data privacy still persist in addressing a few practical challenges demanding further investigation, such as limited security integration and unpatched vulnerabilities. Additionally, centralized user authentication is not applicable to cross-domain application systems like trusted platforms where system capabilities limit their potential growth with connected devices. Thus, this paper proposes a blockchain-authorized privacy-preserving (BAPP) framework using edge computing for the cloud-assisted IoMT. The proposed framework utilizes a hybrid architecture in the edge server to offer centralized authentication. Accordingly, the edge server is associated with a private blockchain network to ensure proper authentication and verification among IoMT devices and to examine metrics namely committed transactions, latency, and throughput. Formal and informal analyses prove the resiliency of the proposed BAPP framework to meet the design requirements of IoMT systems. Above all, experiment analysis shows that the proposed framework achieves better performance in terms of authentication delay ($\approx 340.5ms$), average throughput ($\approx 94.75\%$), computation time ($9.548ms$), and average latency ($\approx 14.11sec$) compared to other authentication schemes.**

***Index Terms*—Cloud, Internet of Medical Things, Authentication, Blockchain, Edge Computing, Privacy-Preserving.**

I. Introduction

Emerging from the evolution of cloud computing technologies is a new computing paradigm 'mobile cloud computing' for the development of various IT provisioning models including on-premises and cloud-based solutions [1]. The former use their own hardware infrastructure to host application software whereas the latter access the provider's server to manage the browser and interface. These models explore utility computing to simplify the security concerns with cloud service providers in order to improve efficiency with the core infrastructure. That infrastructure operates resource-constrained devices like those in the IoMT to access computing services via different providers (e.g., Amazon Web Service and Google Cloud). The distributed cloud determines its subscribers' location to manage resources efficiently in an effort to meet the performance requirements of edge computing systems [2]. Most computing systems deal with a large-scale network where computing devices and their sensor objects are interconnected within a working environment to offer heterogeneity while the computing (i.e., mobile and cloud) converges with the network.

Revolutionary applications provide greater convenience in automating daily processes like health and transportation. Most computing devices communicate with sensor objects to analyze massive amounts of data in real-time. According to Statista, the number of connected devices is predicted to be 29.42 billion by 2025 across all vertical industries, including transportation and storage. In smart healthcare, the IoMT often accesses privacy-sensitive information of patients that are monitored in parallel by medical experts or doctors to manage chronic or emergency conditions. As the monitoring system handles sensitive data over the Internet, and because the experts' decisions are solely dependent on the transmitted data, securing the computing devices is crucial to protecting the sensor information. In addition, connected IoMT devices face technological challenges like interoperability, scalability, and bandwidth availability [3]. Considering the above perceptions, it is evident that security issues are associated with privacy and proper authenticity, whereas technological hitches are related to compatibility and scalability.

Technical difficulties make connected IoMT devices more susceptible to the inadequacy of resources such as energy, memory, and storage. As a result, the conventional protocols and their security mechanisms provide ineffective solutions to cloud-assisted application systems (like Google Cloud). Moreover, connected networks raise the issue of scalability while operating unreliable computing devices and networks. To overcome the above issues, various approaches have been employed, including encryption, authentication, and authorization [4]. Generally speaking, integrated techniques often provide improved security; however, those techniques require additional cost efficiencies, i.e., computation and communication that affect the service requirements of IoMT applications. In this context, a strategy of data security including authentication, authorization, and encryption is chosen from existing work to determine whether the security of a system is maintained or not. The objective of this strategy is to validate the legitimacy of client identities over an insecure wireless network. Additionally, the complexity of cryptographic primitives is evaluated theoretically to analyze cost efficiencies including computation and communication.

Most centralized authentication considers semi-trusted or un-trusted parties in order to validate the identity of computing devices. As a consequence, this authentication addresses a few serious issues, such as access control and a lack of scalability, and thus, cannot handle a network with a rapid expansion of connected devices. To operate massive connectivity over heterogeneous communication, latency-sensitive, energy-efficient authentication is necessitated. This proposed technical strategy considers an edge computing paradigm to provide better computing and storage resources to establish communication with remote servers. However, secure connectivity over distributed IoT networks still persists as a challenging issue because computing devices geographically connect the sensor objects through different

*Corresponding Authors (Seong Oun Hwang)

This work was supported by the Brain Pool Program through the National Research Foundation of Korea (NRF) funded by the Ministry of Science and Information Communication Technology (ICT) under Grant No. 2022H1D3A2A02081848.

B.D. Deebak and Seong Oun Hwang are with the Department of Computer Engineering, Gachon University, Seongnam 13120, South Korea, (Email: deebak@gachon.ac.kr, sohwang@gachon.ac.kr).

© 2026 IEEE. All rights reserved, including rights for text and data mining and training of artificial intelligence and similar technologies. Personal use is permitted, but republication/redistribution requires IEEE permission. See https://www.ieee.org/publications/rights/index.html for more information.

This article has been accepted for publication in IEEE Transactions on Cloud Computing. This is the author's version which has not been fully edited and content may change prior to final publication. Citation information: DOI 10.1109/TCC.2026.3656828

application interfaces and protocols to provide authentication [5]. In improving authentication over diverse IoT devices, recent studies have promoted the use of blockchain technology. These studies present a decentralized architecture to ensure proper authentication of IoT devices without the involvement of centralized parties.

Moreover, this technology disregards the use of third parties to transfer data directly among real-time entities. As a result, a network can provide better transparency and immutability to provide a comprehensive view of data transactions enduring the overall transfer of records. The overall records represent the health of the transaction chain to minimize the computation cost and the risk factors to privacy and integration. It is worth noting that each transaction attempts to record itself as a permanent block before being added to the blockchain network [6]. Therefore, trusted third parties are no longer required to store confidential data in any centralized system. On the other hand, the blockchain network can meet key requirements such as security and data privacy by using a hashing algorithm and public key infrastructure to hold tamper-proof features that prevent leakage and alteration. Precisely, the diverse range of smart devices in the medical environment demands proper privacy preserving and data sharing among other devices to facilitate real-time data processing using advanced wireless technologies (5G Networks, Bluetooth, and Zigbee). Moreover, to provide data distribution, the traditional IoMT systems utilize blockchain technology between medical institutions via powerful edge computing devices.

The traditional systems use secure data transmission and authentication to characterize the data pattern along with reliable routing protocol to address security vulnerabilities i.e., key impersonation. They use proper authentication processes to prevent unauthorized access and also exploit the core functionalities of decentralized architecture to support efficient decision-making processes through various consensus mechanisms. Most existing studies have adopted their digital database or ledger in the form of blockchain technology to achieve key distribution and privacy protection. However, they still experience high computation and communication costs due to anonymization and differential privacy degrading the authenticity of data acquired in health information systems. In practice, the blockchain-based IoMT uses a hash-based unique identity as a complex mathematical function to guarantee confidentiality in order to generate data blocks. Considering the above significance, the blockchain network and edge computing can be integrated into a single assimilated component to build a decentralized security framework with device authorization to meet the compliance needs of the cloud-based IoMT. Also, this study exploits the salient features of the assimilated components to present a robust privacy-preserving mechanism with lightweight authentication and message verification.

A. Motivation

The medical devices used in healthcare, like heart rate and blood pressure monitors, have restricted computing resources for any supplementary processes due to communication latency. Most computing devices are designed to focus on connectivity; thus, they may lack built-in safeguards to protect the interface against vulnerabilities from an insecure environment. On the other hand, in edge computing, the device may interact with secure or in-secure networks to process its specific computation closest to other devices in lieu of a dedicated network infrastructure [7]. As a result, edge computing may demand a computing device to manage sensitive data. Since there is the possibility that the computing system has to access an insecure network to perform data processing, an adversary might compromise the system to force network compliance. To mitigate the security risk, edge computing can apply a strategy of robust authentication and authorization controls by using proper data encryption while transmitting confidential data.

Of late, a few research studies have focused on security weaknesses in authentication schemes for the cloud-assisted IoT [8]–[10]. A blockchain-assisted authentication (BAA) framework was proposed for healthcare systems [8]. This framework eliminates the use of a single trusted authority to protect the security features of medical devices. Also, privacy-preserving multifactor device authentication (PP-MDA) using a blockchain scheme was designed for a cross-domain industrial IoT [11]. This scheme applies user anonymity with a dynamic index to secure the communication environment against replay attacks [12]. Unfortunately, mechanisms including BAA and PP-MDA incur more computation costs during authentication, and the key agreement phase to complete the key verification process. As a result, schemes such as privacy-preserving blockchain-based identity management (PP-BIM) [13], decentralized anonymous authentication (DAA) [14], certificateless identity authentication (CIA) [15], and lightweight identity-based two-party authentication (L-ITPA) [16] were developed using blockchain or edge computing for various industrial IoT environments like the smart grid.

These mechanisms exploit the key features of blockchain technology or edge computing to achieve better-decentralized service in order to provide seamless data sharing with limited computation costs. However, in a real-time scenario, while sharing the generated data among computing users over an insecure network, the mechanisms in [13]–[16] are conditionally subjected to several security risks such as impersonation, privileged-insider, and denial-of-service attacks. Therefore, this study employs decentralized authentication and authorization to enhance the salient features of the network including security and reliability. Moreover, the applied strategy uses energy-efficient authentication to manage a massive amount of computing data in a cloud-assisted IoMT environment.

B. Contributions

In a large-scale application, centralized authentication has become impracticable due to the massive amounts of computation with the data. In particular, a time-sensitive application always focuses on a deterministic latency to meet the decision requirements of trusted authorities. However, security and privacy concerns of the users have resulted in less trustworthiness in sharing data while providing authentication to diverse IoT networks or systems [11]. Moreover, diverse networks create more authentication overhead among the computing nodes in order to address critical issues such as verification delay. Thus, this paper applies a decentralized blockchain structure using edge computing to achieve the security requirements of the cloud-assisted IoMT. The major contributions are as follows.

1) We propose a blockchain-authorized privacy-preserving (BAPP) framework using edge computing to resolve key issues such as latency and throughput. This framework interoperates with centralized and decentralized architectures based on blockchain and edge computing to improve the security level of the system in order to achieve a better degree of privacy protection.
2) We utilize a decentralized blockchain structure to ensure seamless connectivity among massive numbers of trusted IoMT devices characterized by diverse IoT networks in an effort to provide edge authentication rendering a secure exchange of data in the connections of associated networks.
3) We devise a network model using a private blockchain that prefers lightweight symmetric and asymmetric data encryption to improve the cost efficiencies of the cloud-assisted IoMT (e.g., computation,

© 2026 IEEE. All rights reserved, including rights for text and data mining and training of artificial intelligence and similar technologies. Personal use is permitted, but republication/redistribution requires IEEE permission. See https://www.ieee.org/publications/rights/index.html for more information.

This article has been accepted for publication in IEEE Transactions on Cloud Computing. This is the author's version which has not been fully edited and content may change prior to final publication. Citation information: DOI 10.1109/TCC.2026.3656828

communication, and delay). It is worth noting that compared to a public blockchain, a private blockchain has provisions for holding decentralized identities and verifiable credentials which allows users to preserve their digital identities without any specific service provider, trusted third parties, or authorities.

4) We apply formal and informal security analyses to prove the security efficiency of the proposed BAPP framework. Additionally, a few relevant authentication schemes have been studied analytically for a wide range of performance evaluations using Ethereum chains including execution time, latency, and average throughput.

C. Paper Organization

The remaining sections of this paper are organized as follows. Section II discusses recent research related to authorization, authentication, and key agreement. Section III describes the system, model, adversarial model, and design goals of the cloud-assisted IoMT. Section IV presents the privacy-preserving framework using blockchain and edge computing, and Section V shows the detailed security analyses (formal and informal). Section VI presents theoretical and simulation analyses to exhibit the salient features of the proposed BAPP framework in comparison with other state-of-the-art approaches, and Section VII concludes this research work.

II. Related Work

In the past few years, several research studies have been conducted with centralized and decentralized architecture for device security and privacy protection. One architecture uses Kerberos authentication or Open Authorization (OAuth) to access protected data resources by using a temporal token issued by an authorized server. A certificate-based authentication protocol was introduced to authorize the connectivity of IoT devices. However, this authentication protocol cannot offer scalability and heterogeneity due to the construction of a network model using a centralized architecture. Moreover, conventional approaches using password- and certificate-based device authentication [17], [18] are still incapable of addressing key challenges such as security, privacy, and energy efficiency. To resolve these challenges, Wazid et al. [19] designed a secure lightweight authentication with remote access. However, these mechanisms fail to provide perfect forward secrecy while applying the encryption system to recover private keys in order to perform data exchanges among computing devices.

Qiao et al. [20] constructed a certificate-based authentication protocol to secure connectivity of IoT devices. Since this protocol prefers a centralized architecture, it has several limitations including heterogeneity and scalability between the platform and the IoT devices. To overcome the limitation issues and to meet technological convergence, most of the application systems have driven centralized authentication into a decentralized one. Of late, recent studies have shown that top-tier applications integrate programmable smart contracts and cryptography techniques to offer efficient service management in various IoT scenarios like connected healthcare monitors [21]. Kumar and Chouhan [22] developed smartcard-based secure authentication (SBSA) for home automation. This mechanism modifies Internet Protocol version 6 (IPv6) to resist security threats in IoT networks.

Moreover, in this mechanism, a pre-determined key is shared beforehand with device owners whereby the registered user may gain system access via smartcard to provide a seamless connection. However, this mechanism relies on centralized authentication to share the pre-determined keys with the remote server. He et al. [10] applied a blockchain-assisted privacy-preserving authentication (B-APPA) to achieve vehicle registration in vehicle ad hoc networks (VANETs). Their approach uses a centralized authority to perform pre-loaded key distribution. As a consequence, this approach proves that it employs centralization to carry out service decentralization using blockchain. Patwary et al. [23] designed location-based authentication (LBA) using blockchain for a fog computing environment. The LBA mechanism uses the properties of a device-to-device model including identity authentication and device protection without a trusted authority in order to minimize the consumption of power and processing latency. Unfortunately, this mechanism does not show any valid proof to analyze the key constraints of the fog computing environment such as data privacy, identity management, etc.

Wang et al. [24] presented privacy-preserving authentication (PPA) using blockchain for satellite-assisted IoT. In this mechanism, Wang et al. consider certificate-less encryption to achieve lightweight computation and also apply a consortium blockchain to mitigate the computation time of the query records within satellite networks. Inopportunely, the PPA mechanism does not apply any formal proof for attaining the security goals for the networks, including privacy preservation and mutual authentication. Wang et al. [25] built an edge-assisted cross-domain using a blockchain-enabled lightweight authentication (BLA) framework for the industrial IoT. Using this framework, the industrial IoT achieves stronger message security with minimum computation overhead to build cross-domain trust among multiple IoT networks. However, the BLA framework generates non-negligible processing latency among the smart devices and blockchain while verifying the legitimacy of multiple receivers in the industrial IoT.

Tao et al. [26] introduced dynamically scalable privacy-preserving authentication (DSPPA) using blockchain to provide adaptive message security among vehicles and roadside units in VANETs. The DSPPA mechanism applies lightweight computation with auto-adaptive support to offer better vehicle traceability. Despite its guaranteed trustworthiness, the mechanism of Tao et al. remains more challenging while performing message verification to validate the credibility of data transmissions. Son et al. [27] developed blockchain-based handover authentication (BHA) to provide the salient features of VANETs, such as data integrity and transparency. Though this model uses lightweight computation, it cannot handle a few inexpensive cryptographic operations to control massive amounts of data in real time, causing a prolonged delay in the decision-making process.

Rajsekaran et al. [31] developed the farm-to-home anonymous authentication privacy-preserving (FH-AAPP) scheme. This scheme uses an unprofitable trusted delivery agent with conditional privacy tracking to collect traces of the communication entities. Though the authors show proof of correctness for conditional privacy, a proper risk assessment was not provided to examine the tracing parameter. Vangala et al. [28] intended to devise a blockchain-enabled authentication and key agreement (B-AKA) mechanism that applies an elliptic-curve operation to the active mobility blocks to minimize computation and communication costs. But B-AKA fails to satisfy a few significant properties such as perfect secrecy, session key agreement, and mutual authentication. Zhang et al. [29] deliberately formulated a dual blockchain-assisted privacy-preserving authentication (DBA-PPA) framework for VANETs. This framework employs conditional tracking to obtain information on illegal vehicles and also puts distributed dynamic revocation into practice to override compromised entities whereby the single point of failure can be eliminated. Regardless, DBA-PPA is still vulnerable to session key disclosure and privileged insider attacks.

Zhu et al. [32] constructed an enhanced certificate-less conditional privacy preserving authentication (EC-CPPA) framework to improve the security efficiency of VANETs. This framework uses certificate-less aggregate signatures to guarantee data authenticity and integrity of

© 2026 IEEE. All rights reserved, including rights for text and data mining and training of artificial intelligence and similar technologies. Personal use is permitted, but republication/redistribution requires IEEE permission. See https://www.ieee.org/publications/rights/index.html for more information.

This article has been accepted for publication in IEEE Transactions on Cloud Computing. This is the author's version which has not been fully edited and content may change prior to final publication. Citation information: DOI 10.1109/TCC.2026.3656828

TABLE I: Comparing the key issues of existing privacy preserving frameworks with security features.

Related Scheme	**Applied Technique**	**Limitation**	Security Features		
			KI_1	KI_2	KI_3
PPA [24]	Certificate-less Encryption	Does not provide any formal analysis to preserve the privacy of the smart assisted technologies.	No	No	No
BLA [25]	Lightweight authentication	Does not use the property of anonymization to overcome the issue related to processing latency.	Yes	No	No
DSPPA [26]	Lightweight computation with auto-adaptive support	Does not guarantee the trustworthiness among the vehicles and roadside units.	Yes	No	No
BHA [27]	Unprofitable trustworthiness with conditional privacy	Does not apply any simulation tools to assess the key parameters of the delivery agents.	No	Yes	No
B-AKA [28]	Elliptic-curve operation and Active Mobility Blocks	Does to adhere to the properties of key agreement protocol such as perfect secrecy and mutual authentication.	No	No	No
DBA-PPA [29]	Conditional Tracking and Distributed Dynamic Revocation	Does nor prevent the vulnerabilities such as key disclosure and privileged insider.	No	Yes	No
BE-LPPA [30]	Dynamic Context and Diffused Practical Byzantine Fault Tolerance	Does not provide any core structure of the key elements to analyze the quality metrics of the authentication framework.	No	Yes	No
KI_1 - Lightweight Authentication; KI_2 - Privacy Preservation; and KI_3 - Message Verification					

data transmission. However, the EC-CPPA does not perform security analysis informally to ensure the properties of trustworthiness and key freshness. Chai et al. [30] intended to develop a blockchain-enabled lightweight privacy preserving authentication (BE-LPPA) in order to expedite the authentication process among the mobilized vehicles. The BE-LPPA utilizes a dynamic context technique to preserve the privacy of the vehicles and also applies a cyber-consensus mechanism so-called diffused practical Byzantine fault tolerance to integrate the blockchain technology in the digital environment. Unfortunately, this framework does not provide any core structure of the key elements to analyze the quality metrics of the authentication framework such as signaling cost and authentication delay.

Zhong et al. [33] aimed to present a lightweight conditional privacy preserving authentication (LCPPA) to solve the issue related to public-private key pairing of the vehicles. This LCPPA generates pseudonyms using two hash chains to enable vehicle anonymity without any additional workloads of trust authorities. Despite this, the LCPPA consumes more computation and communication costs while verifying the legal identities of the vehicles. Xie et al. [34] designed an efficient privacy preserving handover authentication (EPPHA) using blockchain to achieve a few significant properties such as unlinkability and key escrow freeness. However, the EPPHA does not apply any blockchain tools to analyze the network latency involved in the authentication and key agreement process.

Table I shows the literature review which demonstrates the following. (1) Very few authentication mechanisms consider the complexity of the system model in order to analyze cross-domain interaction; however, the mechanisms lack success in the analysis of transmission efficiency using any specific platform to show off performance efficiency; (2) Most frameworks still fail to consider lightweight authentication, privacy preservation, and proper message verification while performing multi-party authentication over a registration center. (3) The risk of a trusted authority is theoretically analyzed to find system deficiencies while managing the application systems with limited computing resources. To overcome the above drawbacks, this paper presents a blockchain blockchain-authorized privacy-preserving framework using edge computing. The proposed BAPP framework utilizes a hybrid architecture in the edge server to provide secure and seamless authentication among devices of the IoMT to improve cost efficiencies (i.e., computation, communication, and verification) observed in recent state-of-the-art approaches [11], [16], [29], [31], [35]–[37].

III. Preliminaries

This section outlines our BAPP system model, illustrating the convergence of edge computing and blockchain technology. Additionally, the adversarial model and design goals explain the adherence to the security requirements of the cloud-assisted IoMT.

A. System Model

This section illustrates the cloud-assisted IoMT using blockchain and edge computing for mHealth applications. The model employs five different entities: the medical administrator, the patient, a control server, plus edge, and cloud servers to offer a seamless decision process in clinical diagnosis and treatment. Detailed descriptions of the entities are as follows.

1) **Medical Administrator -** This system entity acts as a trusted authority to register the legitimate participants including patients and doctors. Most importantly, this entity controls the application interface to manage the permission blockchain.
2) **Patient -** Legitimate participants like patients use a robust authentication framework to obtain proper privacy preservation between the cloud and control server in order to receive medical services like medical diagnoses. Using the authentication framework, the participants obtain a unique session key to establish service connectivity with the control server.
3) **Internet of Medical Things (IoMT) -** The IoMT stores and manages the protected healthcare information of the patient with a dedicated application interface. The interface configures various medical sensing units to examine the condition of the participants (e.g., safe, critical).
4) **Edge Server -** This server allocates adequate computing resources at the edge of the network connecting the edge networks and blockchain to provide proper decentralized authentication ensuring reliable data processing and secure device connection.
5) **Cloud Server -** This server holds the processing capacity for data storage and computing power, collecting the generated data to guarantee secure data sharing. Moreover, this server records a proper registration with the medical administrator in order to handle the encrypted data provided by the control server to process service requisition for the patient.

© 2026 IEEE. All rights reserved, including rights for text and data mining and training of artificial intelligence and similar technologies. Personal use is permitted, but republication/redistribution requires IEEE permission. See https://www.ieee.org/publications/rights/index.html for more information.

This article has been accepted for publication in IEEE Transactions on Cloud Computing. This is the author's version which has not been fully edited and content may change prior to final publication. Citation information: DOI 10.1109/TCC.2026.3656828

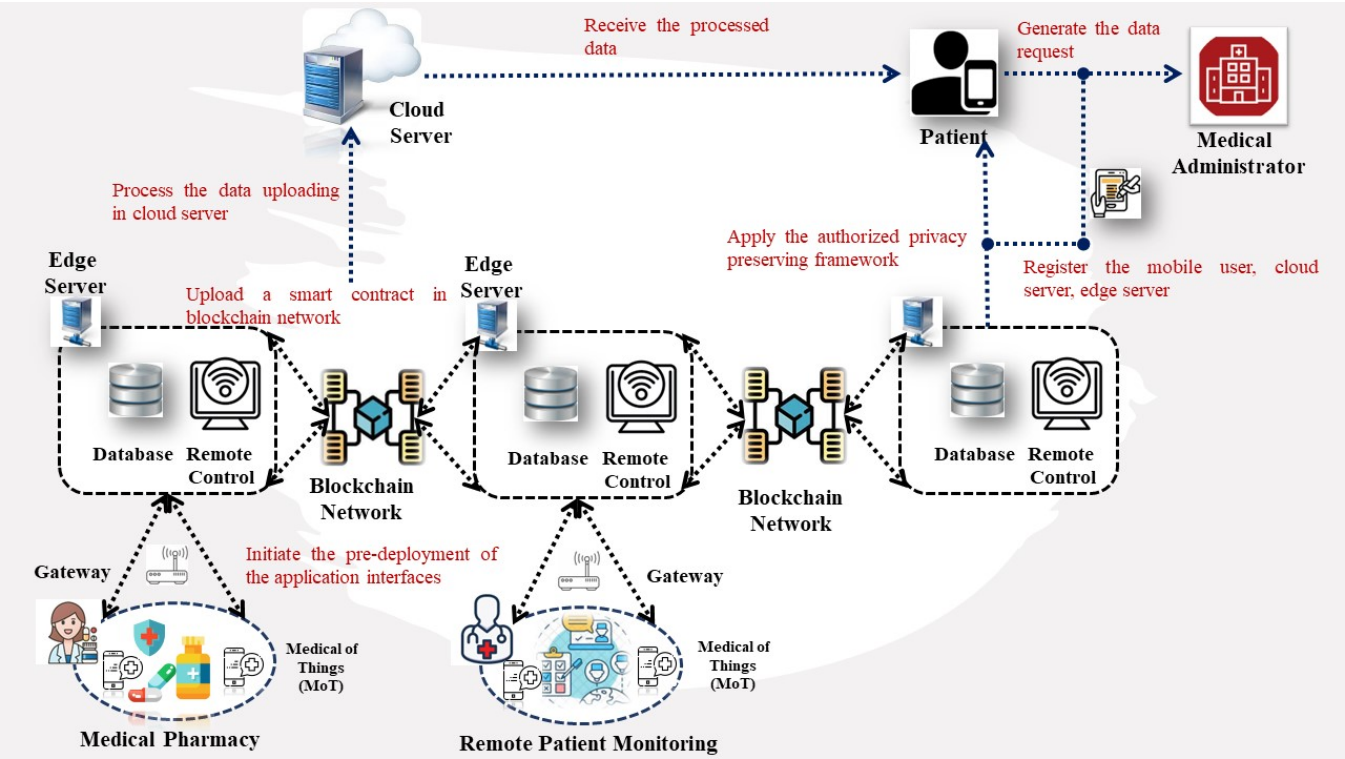

Fig. 1: Proposed System Model.

The transition flow of the system model is shown in Fig. 1 to exemplify decentralized authentication between edge networks and blockchain. Descriptions are as follows.

- Each application interface is assigned its own unique identity via the control server and registers its connectivity via the edge server to perform clinical services like primary care.
- Entities such as the patients, and edge/cloud servers record their unique identities through the medical administrator to access service requisitions for the patients.
- The communication entities, including patients and edge servers apply the authentication framework to perform secure session key establishment.
- After the successful authentication of the participants (i.e., the patients), the edge server obtains a transaction protocol to execute a smart contract with the available application interfaces using their pre-shared authorized keys. Lastly, the smart contract establishes a secure link to eliminate the trusted authority process, making the system more efficient in terms of transparency and immutability.
- Secure link establishment guarantees proper encryption and decryption to collect and process sensitive data generated by an application interface, using its pre-determined session key to store them in the cloud database.
- Patients may access the stored data via proper data requisition, i.e., using their session key to access the cloud server in order to review clinical reports.
- Finally, the edge server constructs a record of log transactions including patient identity, interface identity, access time, device location, etc., and uploads it as a transaction block to the blockchain network.

This convergence enables proper device verification with adequate computing resources to perform device connectivity and data sharing. As a consequence, this model can establish secure communication among the same or different computing systems for scalability.

B. Adversarial Model

This section considers a Dolev-Yao threat model that uses two entities (the patient and application interface) as the untrusted participants while they establish connectivity with the network through insecure channels. Considering channel insecurity, an adversary $\mathcal{A}_{\mathcal{D}}$ might intercept sensitive information shared during the system registration and authentication process in order to forge the location of a computing device. Moreover, different strategies are provided in Section V-A to ensure the resiliency of the proposed BAPP framework [19]. The assumption details are as follows.

- We assume that edge computing systems use both static and dynamic nature of IoMT devices to access the connectivity of the networks [38].
- We manage the registered IoMT devices to obtain access privileges in the blockchain network.
- We make the edge server to assess the current location of the computing device.
- We observe the entire computing system as an untrusted and distributed authority, whereby the communication entities cannot commit to each other.
- We also assume that $\mathcal{A}_{\mathcal{D}}$ can be any individual or computing device associated with the overall system network.

C. Design Goals

The goal of the proposed BAPP framework is to provide an efficient privacy-preserving framework with device authorization to guarantee the privacy of data from IoMT devices. This framework develops blockchain-authorized decentralized authentication without a trusted authority to meet the design requirements of the cloud-assisted IoMT. Above all, the proposed BAPP applies lightweight cryptographic primitives like hash functions to reduce costs such as computation complexity and latency. The design requirements are as follows.

© 2026 IEEE. All rights reserved, including rights for text and data mining and training of artificial intelligence and similar technologies. Personal use is permitted, but republication/redistribution requires IEEE permission. See https://www.ieee.org/publications/rights/index.html for more information.

This article has been accepted for publication in IEEE Transactions on Cloud Computing. This is the author's version which has not been fully edited and content may change prior to final publication. Citation information: DOI 10.1109/TCC.2026.3656828

1) **Device Authentication and Data Integrity -** The edge computing system verifies the sources of the application interface (i.e., the IoMT device) to protect the integrity of the legitimate participants.
2) **Non-Repudiation and Unforgeability -** The edge computing system cannot restrict an IoMT device from publishing secret information and cannot make other devices publish the forged information.
3) **Identity Protection and Traceability -** The proposed BAPP framework preserves the real identities of the participants in order to avoid the manipulation of sensitive data in real-time caused by data breaches.
4) **Unlinkability -** This property does not allow $\mathcal{A}_{\mathcal{D}}$ to extract sensitive information by using diverse information of the participants to imply device privacy.
5) **Vulnerability To Various Attacks -** The proposed BAPP framework has its own authentication strategies like device authorization and privacy preservation to prevent various security attacks such as replay, man-in-the-middle, password guessing, etc.

Additionally, this paper considers a few evaluation metrics such as verification delay, average authentication delay, committed transaction, average latency, and throughput using IoT testbed and blockchain to analyze the behavioral characteristics of authentication and key agreement process. In the analysis, the computing environment considers a flow of authentication requests as the primary source to probe the network load causing the queues to increase its turnaround time indefinitely. The key descriptions are as follows.

1) ***Verification Delay:*** is the process validating the identity of client information via edge/cloud server to determine whether the client attempting to share its data access using M_{ot} is legitimate or not. Moreover, to inspect the generation of authentication requests, different network scenarios including blockchain are chosen over limited client requests.
2) ***Average Authentication Delay:*** deals with edge/cloud server to verify the authenticity of mobilized clients which validates the network performance of different probabilistic scenarios using proper key agreement process to examine the delay period of the transmission request.
3) ***Committed Transaction:*** uses the transaction records of the client applications via a distributed database to evaluate the process of submitted transactions transferred by the computing nodes.
4) ***Average Latency:*** assesses the turnaround time of the distributed applications associated with valid network transactions to inspect the processing time of the submitted transactions.
5) ***Throughput:*** exploits the properties of the communication network to probe the transmission rate of data packets submitted by the client applications. More precisely, the network operates the blockchain platform using a consensus mechanism like proof of stake (Pos) to validate the transaction rate of the network.

IV. The Proposed BAPP Framework

This section presents the blockchain-authorized privacy-preserving framework using edge computing to preserve the salient integrity features of the cloud-assisted IoMT. In the proposed BAPP framework, the computing device and the IoMT employ lightweight cryptographic primitives like hashing during authentication and key agreement to reduce the cost efficiencies of the computation and communication systems. Additionally, the cloud and edge computing server reserve enough computing resources and processing capacity to generate the public keys for legitimate participants in order to enroll connectivity in Hyperledge-Fabric networks. The network utilizes the medical administrator to validate generated keys for the participants in order to outsource the medical data. Lastly, the outsourced data are integrated with the blockchain as a transaction block to infer or track device location. The classified computing phases of the proposed BAPP framework are pre-deployment, user/server registration, system login and authentication, plus IoMT data uploading, processing, block construction, and verification.

TABLE II: Important notations

Parameter	Description
M_A	Medical Administrator
M_{ot}	Internet of Medical Things
E_{S_j}	Edge server, where j=1,2,3,...
C_S	Cloud server
E_p	Elliptic-curve with prime order p
p,q	Prime integers
pv_{ma}	Private key of M_A
pu_{ma}	Public key of M_A
ZID_k	Context identity of the personalized zone, where k=1,2,3,...
ps_k	Pre-shared key
U_{ID_j}	Identity for each MT_j
MT_j	Unique identity of M_{ot}
P_i	Patient, where i=1,2,3,...
id_{cs}	Unique identity of C_S
pv_{cs}	Private key of C_S
x_i, y_i	Random integers
id_{es}	Unique identity of E_S
pv_{es}	Private key of E_S
pu_{es}	Private key of E_S
$cert_j$	Certificate of E_S generated by EC_{DSA}
r_i, r_j, and r_k	Random nonce's generated for P_i, C_S, and E_S
s_k	Session key
Δts	Pre-determined transmission delay
$h_1(.)$,$h_2(.)$,$h_3(.)$	Cryptographic hash function
S_C	Smart contract
M_{data}	Medical data
D_I	Data index
M_{req}	Message request
$\|$	Concatenation operator
$\oplus$	Exclusive OR operation

Initially, medical administrator M_A generates a few significant parameters using elliptic curve cryptography to build the Ethereum chain network. M_A prefers base point G over elliptic-curve E_p with prime order p, which holds the generator of G to the given order q i.e., for P where q is a prime integer. Further, M_A chooses its private key pk_{ma} to compute a public key $pu_{ma} = pk_{ma}.G$. Accordingly, M_A shares the network compliance and configuration policies with legitimate participants to designate IoMT devices as authorized to gain network access. Finally, M_A publishes system parameters $\{G,P,pk_{ma},p,q\}$. Table II shows the important parameters used in the proposed BAPP framework.

A. Phase I - Pre-Deployment

Initially, each legitimate participant uses its own application interface to connect or discover the personalized zone using M_{ot} which registers its unique identity MT_j with its dedicated edge server E_S to initialize the pre-deployment phase. Moreover, E_S allocates an identity U_{ID_j} to each MT_j before discovering it in the personalized zone of the application interface (like a Pharmacy) along with ZID_k. After obtaining computation parameters U_{ID_j} and ZID_k, E_S determines pre-shared key ps_k using $h(ZID_k \| U_{ID_j} \| pv_{E_S})$ and records parameters $\{ZID_k,ps_k\}$ in the storage space of M_{ot}. To secure connectivity within E_S, parameters $\{ZID_k,ps_k,U_{ID_j}\}$ are stored in its own database.

© 2026 IEEE. All rights reserved, including rights for text and data mining and training of artificial intelligence and similar technologies. Personal use is permitted, but republication/redistribution requires IEEE permission. See https://www.ieee.org/publications/rights/index.html for more information.

This article has been accepted for publication in IEEE Transactions on Cloud Computing. This is the author's version which has not been fully edited and content may change prior to final publication. Citation information: DOI 10.1109/TCC.2026.3656828

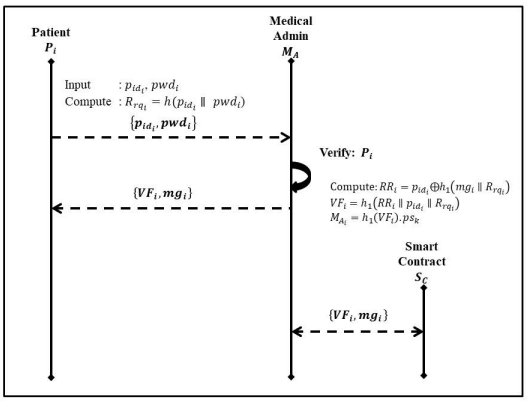

(a) Patient Registration

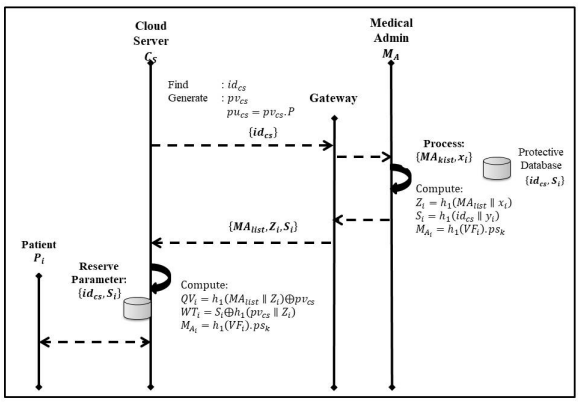

(b) Cloud Server Registration

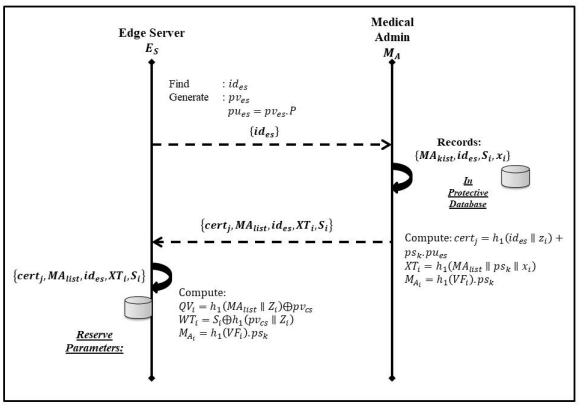

(c) Edge Server Registration

Fig. 2: Registration Phases.

B. Phase II - Registration

In this phase, the patient, edge server, and cloud server register their active credentials with M_A which allows M_{ot} to share clinical information with the blockchain to perform proper consensus verification and distributed storage access. Moreover, characteristics including consensus and trusted storage guarantee the integrity of transition in the blockchain.

1) Patient Registration: Patient registration is agreed upon with M_A to process several clinical requisition services like remote patient monitoring as shown in Fig.2a. The steps are as follows.

Step 1: P_i finds credentials such as identity p_{id_i} and pwd_i to compute the registration request $R_{rq_i} = h(p_{id_i} \| pwd_i)$.

Step 2: P_i transmits source parameters $\{p_{id_i}, pwd_i\}$ to M_A in order to validate service requests.

Step 3: Upon receiving the source parameters, M_A computes $RR_i = p_{id_i} \oplus h_1(mg_i \| R_{rq_i})$, $VF_i = h_1(RR_i \| p_{id_i} \| R_{rq_i})$, and $M_{A_i} = h_1(VF_i).ps_k$ to verify the request message of P_i.

Step 4: M_A uploads initial request $\{VF_i, mg_i\}$ into smart contract S_C using *Phase III [Network Computing]* and communicates a valid M_{A_i} to P_i.

Step 5: P_i obtains M_{A_i} and stores it in its database.

2) Cloud Server Registration: To process a clinical requisition, C_S agrees to register its credentials with M_A as shown in Fig.2b. The steps are as follows:

Step 1: C_S finds its unique identity id_{cs} which lets it generate a valid private key pv_{cs} to obtain the public key $pu_{cs} = pv_{cs}.P$. Subsequently, C_S transmits id_{cs} to the corresponding M_A over a secure gateway.

Step 2: M_A fetches the processing request $\{MA_{list}, x_i\}$ through its dedicated database. Obtaining this information, M_A generates random integer y_i to compute $Z_i = h_1(MA_{list} \| x_i)$ and $S_i = h_1(id_{cs} \| y_i)$. Additionally, M_A reserves parameters $\{id_{cs}, S_i\}$ in its protective database and transmits $\{MA_{list}, Z_i, S_i\}$ to C_S through its dedicated gateway.

Step 3: C_S finds $QV_i = h_1(Z_i \| MA_{list}) \oplus pv_{cs}$ and $WT_i = S_i \oplus h_1(pv_{cs} \| Z_i)$ to examine the service requisition of P_i. Finally, C_S keeps verifiable parameters $\{QV_i, WT_i\}$ in its reserved database.

3) Edge Server Registration: To obtain efficient clinical service, legitimate participant P_i gains E_S access to ensure proper registration with M_A to apply decentralized authentication. Moreover, this applied authentication process enables verification of M_{ot} to secure the shared data as shown in Fig.2c. The steps involved in this registration are as follows.

Step 1: E_S obtains its unique identity id_{es}, with which it generates a private key pv_{es} to find public key $pu_{es} = pv_{es}.P$. Accordingly, E_{S_j} transmits parameters $\{id_{es}\}$ to M_A over a secure gateway.

Step 2: Following this, M_A records source parameters $\{MA_{list}, id_{es}, S_i, x_i\}$ in its secure database to execute message verification. Additionally, M_A generates another random number, z_i, to compute trusted parameters $cert_j = h_1(id_{es} \| z_i) + ps_k.pu_{es}$ and $XT_i = h_1(MA_{list} \| ps_k \| x_i)$. Lastly, M_A transmits parameters $\{cert_j, MA_{list}, id_{cs}, XT_i, S_i\}$ to E_S.

© 2026 IEEE. All rights reserved, including rights for text and data mining and training of artificial intelligence and similar technologies. Personal use is permitted, but republication/redistribution requires IEEE permission. See https://www.ieee.org/publications/rights/index.html for more information.

This article has been accepted for publication in IEEE Transactions on Cloud Computing. This is the author's version which has not been fully edited and content may change prior to final publication. Citation information: DOI 10.1109/TCC.2026.3656828

Step 3: After successful transmission of the source parameters, E_S stores $\{cert_j, MA_{list}, id_{cs}, XT_i, S_i\}$ in its database.

C. Phase III - Login and Key Authentication

Fig. 3 outlines the secure connectivity of P_i and E_S by applying the systematic authentication framework below to obtain a valid session key s_k in order to access clinical services including treatment and diagnosis with the aid of C_S. The steps are as follows.

Step 1: P_i enters valid credentials including p_{id} and pwd_i to determine $MA_i = h_2(p_{id} \| pwd_i)$, $A_i = RR_i \oplus h_2(pwd_i \| MA_i)$, $R_{rq_i} = h_2(pwd_i \| A_i)$, $XT_i = VF_i \oplus h_2(MA_i \| R_{rq_i} \| A_i)$, $Z_i = RR_i \oplus h_2(MA_i \| XT_i)$, and $VF_i^* = h_2(RR_i \| p_{id} \| R_{rq_i})$ in order to verify whether $VF_i^* \stackrel{?}{=} VF_i$.

Upon successful verification, P_i obtains valid random nonce r_i and timestamp ts_1 to compute $M_1 = r_i \oplus h_2(XT_i \| MA_i)$, $M_{P-CS} = h_2(MA_i \| Z_i)$, and $M_{P-ES} = h_2(MA_i \| r_i \| XT_i)$. Later, P_i transmits message request $\{MA_i, M_1, M_{P-CS}, M_{P-ES}, ts_1\}$ to C_S via a secure gateway. Otherwise, P_i terminates the current session.

Step 2: On obtaining message request $\{MA_i, M_1, M_{P-CS}, M_{P-ES}, ts_1\}$, C_S verifies the freshness of ts_1 using $|ts_1 - ts_1^*| \le \Delta ts$ to fetch $\{QV_i, WT_i\}$ in from its database where ts_1^* is the time of the received message request, and Δts is the pre-determined transmission delay. Following this, C_S computes $(Z_i \| MA_{list}) = QV_i \oplus pv_{cs}$, $S_i = WT_i \oplus h_2(pv_{CS} \| Z_i)$, and $M_{P-CS}^* = h_2(MA_i \| Z_i \| ts_1)$ to check whether $M_{P-CS}^* \stackrel{?}{=} M_{P-CS}$.

Upon successful verification, C_S obtains random nonce r_j and timestamp ts_2 calculating $MT_1 = r_j \oplus h_2(S_i \| ts_2)$ and $MT_{CS-ES} = h_2(r_j \| S_i \| ts_2)$. Later, C_S transmits message request $\{MA_i, M_1, MT_1, MT_{CS-ES}, M_{P-ES}, ts_1, ts_2\}$ to E_{S_j}. Otherwise, C_S terminates the session.

Step 3: E_{S_j} validates the freshness of ts_2 using $|ts_2 - ts_2^* \le \Delta ts$ to compute $r_j = MT_1 \oplus h_2(S_i \| ts_2)$ and $MT_{CS-ES}^* = h_2(r_j \| S_i \| ts_2)$ in order to check whether $MT_{CS-ES}^* \stackrel{?}{=} MT_{CS-ES}$.

If validation is successful, E_{S_j} computes $r_i = M_1 \oplus h_2(XT_i \| MA_i)$ and $M_{P-ES}^* = h_2(MA_i \| r_i \| XT_i \| ts_1)$ to verify whether $M_{P-ES}^* \stackrel{?}{=} M_{P-ES}$. Otherwise, E_{S_j} terminates the session.

If verification is successful, then E_{S_j} selects random nonce r_k and timestamp ts_3 to compute $E_1 = r_k \oplus h_2(MA_i \| r_i \| XT_i)$, $E_2 = r_k \oplus h_2(r_j \| ts_3)$, and $MA_i^{New} = h_2(MA_i \| r_k)$. Later, E_{S_j} compares MA_i with MA_i^{New} to store them in the E_S database.

Additionally, E_{S_j} determines session key $sk = h_2(r_i \| r_k \| XT_i)$, along with $E_{ES-CS} = h_2(MA_i \| S_i \| r_j \| ts_3)$, and $E_{ES-P} = h_2(MA_i \| XT_i \| sk \| ts_3)$ to ensure message authenticity. Lastly, E_{S_j} transmits parameters $\{E_1, E_{ES-CS}, E_{ES-P}, ts_2, ts_3\}$ to C_S.

Step 4: C_S checks the freshness of ts_4 using $|ts_3 - ts_3^* \le \Delta ts$ to find $E_{ES-CS}^* = h_2(MA_i \| S_i \| r_j \| ts_3)$ to verify that $E_{ES-CS}^* \stackrel{?}{=} E_{ES-CS}$.

If successfully verified, C_S computes $C_{CS-P} = h_2(Z_i \| r_i \| MA_i \| E_1 \| ts_4)$ to continue the transfer of message request $\{E_1, C_{CS-P}, E_{ES-P}, ts_3, ts_4\}$ to P_i.

Step 5: P_i verifies the freshness of timestamp ts_4 to compute $C_{CS-P}^* = h_2(Z_i \| r_i \| MA_i \| E_1 \| ts_4)$ in order to validate $C_{CS-P}^* \stackrel{?}{=} C_{CS-P}$. If validation fails, P_i terminates the session.

Otherwise, P_i finds $r_k = E_1 \oplus h_2(MA_i \| r_i \| XT_i)$, $sk = h_2(r_i \| r_k \| XT_i)$, and $E_{ES-P}^* = h_2(MA_i \| XT_i \| sk \| ts_3)$ to examine authenticity by checking if $E_{ES-P}^* \stackrel{?}{=} E_{ES-P}$. If authenticity holds in its examination of P_i's message request, then P_i and E_S establish session key sk successfully to share the data. Otherwise, the session terminates.

D. Phase III - Network Computing

In this phase, M_{ot} acts as a data collector between P_i and E_{S_j} to participate in the communication. Entities namely P_i and E_{S_j} apply the proposed BAPP framework to establish a secure session that authenticates the gateway associated with an application interface like Pharmacy to guarantee ledger integrity. To interact with B_N, M_{ot} executes a few basic functions such as uploading, requesting, construction, and verification provided by the Ethereum chain network. The computing phases are as follows.

1) Data Uploading: On obtaining the data assessed by M_{ot_j}, E_{S_j} initiates a smart contract to upload it to blockchain network B_N. Subsequently, E_{S_j} encrypts the medical data and records them in C_S. The steps are as follows:

Step 1: M_{ot_j} finds $mt_{id_j} = h_3(MT_j \| ps_k)$, $MD_{ES} = E_{prk}(ZID_k, M_{data}$, and $MD_{CS} = h_3(mt_{id_j} \| ZID_k \| ps_k)$. Accordingly, M_{ot} transmits parameters $\{mt_{id_j}, MD_{ES}, MD_{CS}\}$ to E_{S_j}.

Step 2: E_{S_j} decrypts MD_{ES} using ps_k to fetch assessed data MT_j^* from its database. Then, E_{S_j} determines $mt_{id_j}^* = h_3(MT_j^* \| ps_k)$ and verifies whether $mt_{id_j}^* \stackrel{?}{=} mt_{id_j}$.

If the verification is successful, E_{S_j} derives $MD_{CS}^* = h_3(MT_j^* \| ZID_k \| ps_k)$ to check whether $MD_{CS}^* \stackrel{?}{=} MD_{CS}$. If verification holds, then E_{S_j} examines the medical data collected by M_{ot_j}. Otherwise, M_{ot_j} reiterates the process of data collection.

It is worth noting that the former process analyzes the conditional state of P_i to recommend clinical treatments. Finally, E_{S_j} creates smart contract $S_C = (MT_j, ZID_k, cert_j, M_{data})$ and accordingly publishes it in B_N.

Step 3: Later, E_{S_j} finds $D_I = E_{sk}(M_{data}, MT_j, ZID_k, u_t)$, $M_{u_t} = E_{S_i}(D_I)$, and $MD_{EC} = h_3(D_I \| S_i)$ in order to complete uploading $\{M_{u_t}, MD_{EC}\}$ to C_S.

Step 4: On acquiring this process request, C_S decrypts the uploaded data using $D_{S_i}(M_{u_t})$. Then, C_S finds $MD_{EC}^* = h_3(D_I \| S_i)$ to verify whether $MD_{EC}^* \stackrel{?}{=} MD_{EC}$. Upon successful verification, C_S keeps uploaded data M_{data} in its database with proper index D_I. Otherwise, C_S reiterates the process request.

2) Data Request and Access: When P_i and E_{S_j} are authenticated, M_{ot} initiates message request M_{R_i} via built-in application interface and sends it to B_N. The generated request M_{R_i} contains the data size, index, sample, and the encrypted method applied during the upload (i.e., AES) to guarantee the security robustness in M_{R_i}. In particular, M_{ot} encrypts request M_{R_i} with the appropriate public key pu_{cs} to obtain ciphertext data request (CDR). In the proposed BAPP framework, P_i initiates its message CDR form and processes it in B_N using M_{ot_j}. The pseudocode of the data transaction and its format is in Table III.

When P_i wishes to initiate data access via the application interface i.e., M_{ot}, P_i sends message request M_{req} to C_S. The steps involved are as follows:

Step 1: P_i creates M_{req} (based on Table III) to compute $MR = E_{ZT_i}(M_{req} \| MA_i)$ and $MD_{PC} = h_3(M_{req} \| MA_i)$. Later, P_i transmits the parameters $\{MR, MD_{PC}\}$ to C_S.

Step 2: On acquiring parameters $\{MR, MD_{PC}\}$, C_S decrypts $D_{ZT_i}(WR)$ to compute $MD_{PC}^* = h_3(MR \| MA_i)$ in order to verify $MD_{PC}^* \stackrel{?}{=} MD_{PC}$. Upon successful verification, C_S obtains the corresponding data file using D_I to apply proper data encryption $MR = E_{ZT_i}(D_I)$. Accordingly, C_S finds $MR = E_{ZT_i}(D_I$ and $MD_{CP} = h_3(M_{req} \| D_I \| MA_i)$ and transmits source parameters $\{MR, MD_{CP}\}$ to P_i.

Step 3: Lastly, P_i decrypts parameter $D_{ZT_i}(MR)$ to compute $MD_{CP}^* = h_3(MR \| D_I \| MA_i)$ in order to check whether

© 2026 IEEE. All rights reserved, including rights for text and data mining and training of artificial intelligence and similar technologies. Personal use is permitted, but republication/redistribution requires IEEE permission. See https://www.ieee.org/publications/rights/index.html for more information.

This article has been accepted for publication in IEEE Transactions on Cloud Computing. This is the author's version which has not been fully edited and content may change prior to final publication. Citation information: DOI 10.1109/TCC.2026.3656828

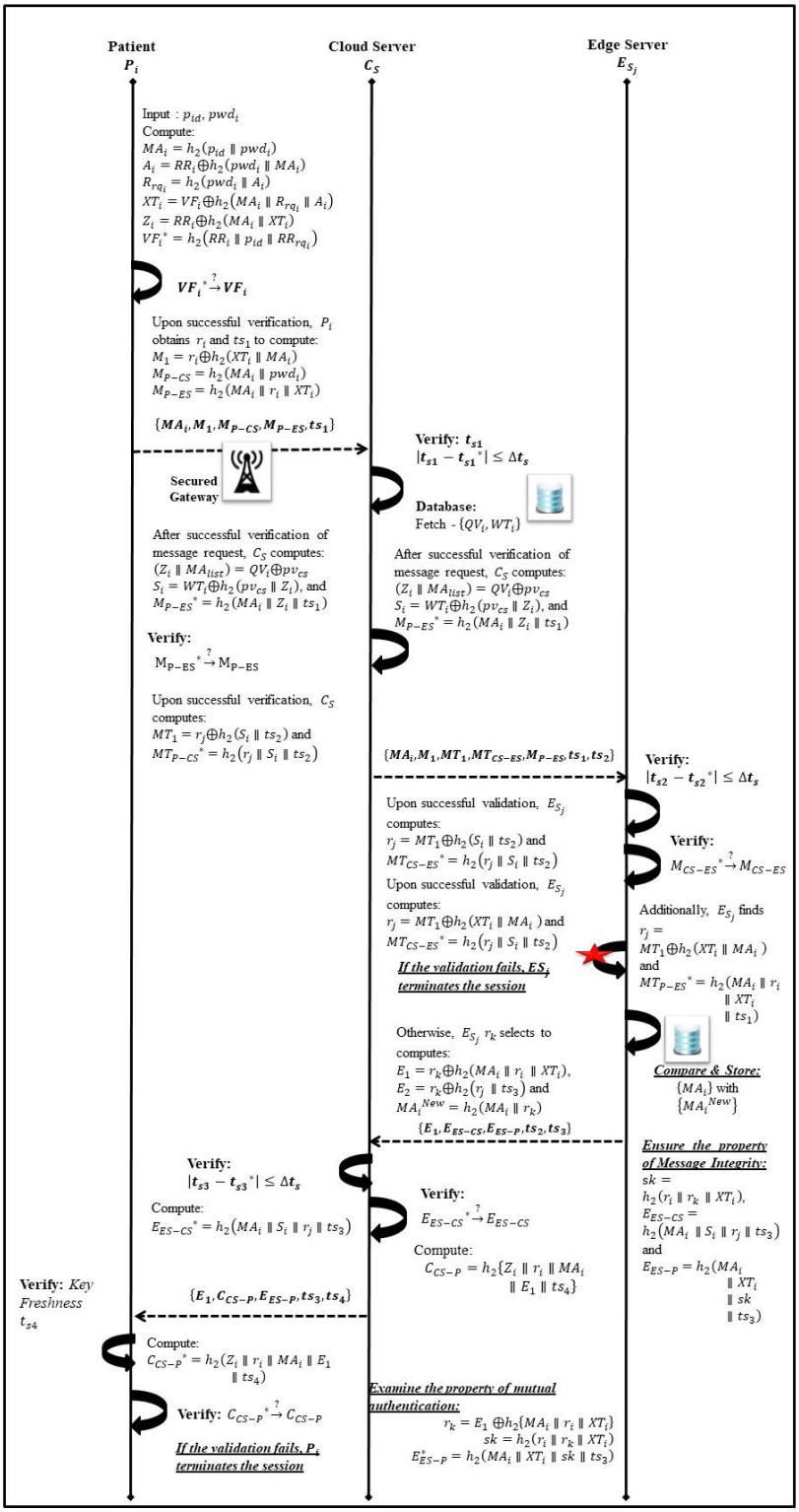

Fig. 3: Secure Connectivity between P_i and E_S.

$MD_{CP}^* \stackrel{?}{=} MD_{CP}$. If verification holds, then P_i decrypts $D_{sk}(D_I)$ to view the content of the source data. Otherwise, P_i reprocesses the message request.

3) Block Formation and Addition Using a Consensus Mechanism: Table III lists complete descriptions of the data block owned by E_{S_j}. On executing the consensus mechanism, E_{S_j} creates data block $Block_x$ and verifies it via B_N. The steps involved in the formation and addition of $Block_x$ are as follows.

Step 1: P_i initiates the access time for transaction at_t and accordingly obtains corresponding data index D_I of $Block_x$ to transmit at_t to E_{S_j}.

Step 2: E_{S_j} fixes information contents n securely in order to

© 2026 IEEE. All rights reserved, including rights for text and data mining and training of artificial intelligence and similar technologies. Personal use is permitted, but republication/redistribution requires IEEE permission. See https://www.ieee.org/publications/rights/index.html for more information.

This article has been accepted for publication in IEEE Transactions on Cloud Computing. This is the author's version which has not been fully edited and content may change prior to final publication. Citation information: DOI 10.1109/TCC.2026.3656828

TABLE III: Format of data transaction

Block Header	
$DT_{id}(string)$	Identifier of the data transaction
CG_{id} (string)	Identifier of the channel gateway
$ts(string)$	Timestamp of the data transaction provided to B_N
E_{S_j}	Owner of the data block
pu_{es}	Public key of the owner
$Sr_{Status}(string)$	Status of the data request
Payload [Data Transaction]	

Message Request M_{req} File [json form]:
[
Data Size (string); //size of the data request
Active Block (string); //active block on the private database
Data Index (string); // data information
Data Sample (string); // sample data request
Data Encrypt (string); // applied encryption strategy
]	

PR_{Hash}	Block hash
$EC_{DSA}.Sign_{T_{px}}$	Block signature using EC-DSA

filter irrelevant parameters. Subsequently, E_{S_j} forms log transaction $T_{px} = (MA_i, MT_j, at_t, d_{loc}, d_{sa}, cert_j)$ and inserts it into the transaction pool, T_{pool_x}.

Step 3: E_{S_j} uses log transactions T_{px_n} to compute a root of the transaction like a Merkle Tree, which applies an elliptic-curve digital signature algorithm to T_{px_n} using $EC_{DSA}.Sign_{T_{px_n}}$.

Step 4: Once T_{px_n} attains its success ratio i.e., using Algorithm 1, E_{S_j} determines the status of its session establishment with P_i via application interface M_{ot_j} to compose detailed transaction block $Block_x$ using M_{req} (shown in Table III) in B_N.

Step 5: On generating $Block_x$, E_{S_j} publishes it to another M_{ot_j} in B_N in order to complete session verification. Accordingly, the other M_{ot_j} validates $Block_x$ with T_{px_n} to generate a session vote RV into its message pool Msg_{pool}.

Step 6: Additionally, E_{S_j} checks Msg_{pool} to determine whether minimum approval is obtained or not by using $RV_C \leftarrow \frac{1}{1+e^{-(XY+Z)}}$. After obtaining the minimum approval, M_{ot_j} adds the newly generated block to its ledger to process the transaction request.

Algorithm 1 Session-based on voting PBFT consensus.

Require: Obtain the values of $\{sk, MA_i, XT_i, ts_3\}$;
Ensure: Status of Session Establishment E_{ES-P}
Initiate the status of connectivity $in \leftarrow 0$;
Declare a weighted vector $\beta \leftarrow ObtainedValue$;
Find the deviation $\gamma \leftarrow ResultedValue$;
$Success_{ratio} \leftarrow \frac{sk}{N}$; //Probability of session establishment
if $Success_{ratio} \neq True$ **then**
  $in \leftarrow in+1$; //Possible unsuccessful session establishment
  break;
$RV \leftarrow \frac{C_E}{C_E+N_C}$;
$X \leftarrow \{Success_{ratio}, RV, in, E_{ES-P}\}$;
$Y \leftarrow \beta$;
$Z \leftarrow \gamma$;
$RV_C \leftarrow \frac{1}{1+e^{-(XY+Z)}}$;
if $RV_C < \theta$ **then**
  "Session Not Established";
"Session Established";
E_{S_j} generates a block $Block_x$ with T_{px_n};
E_{S_j} sets $Msg_{pool} \leftarrow \Phi$ [Empty] and sends it to other M_{ot_j};
E_{S_j} obtains the session vote RV to validate it with T_{px_n};
if $T_{px} = EC_{DSA}.Sign_{T_{px}} = RV_C = Valid$ **then**
  $Msg_{pool} \leftarrow Msg_{pool}+1$;
if $Msg_{pool} \geq RV_C$ **then**
  Add $Block_x$ in B_N;
  Disseminate $Block_x$ to M_{ot_j}

V. Security Analysis

This section outlines the security efficiency of the proposed BAPP framework using formal and informal analysis. The formal analysis applies the real or random (RoR) model to guarantee the security of session key sk semantically. In contrast, the informal analysis examines the proposed mechanism under the condition of parameter utilization in order to demonstrate its resiliency over various attacks such as replay, and impersonation.

A. Formal Analysis

The formal analysis uses the RoR model to ensure secure connectivity between P_i and E_{S_j} semantically by using a proper session key sk to demonstrate mutual authentication. Moreover, entity $P_i^{I_1}$ uses data collector M_{ot_j} to validate the flow transition of three simulation instances $SIM_P^{I_1}$, $SIM_{CS}^{I_2}$, and $SIM_{ES}^{I_3}$ where I_1, I_2, and I_3 define the roles of P_i, C_S, and E_{S_j}, respectively. To verify the efficiency of the proposed BAPP framework by using the simulation instance, $\mathcal{A}_{\mathcal{D}}$ generates various query attacks in real-time between $\Pi_i^{M_{ot_j}}$ and $\Pi_j^{E_{S_j}}$. The queries are as follows.

- *Modify* $(\Pi_i^{M_{ot_j}}, \Pi_j^{E_{S_j}})$ This query allows $\mathcal{A}_{\mathcal{D}}$ to overhear the sharing of information between $\Pi_i^{M_{ot_j}}$ and $\Pi_j^{E_{S_j}}$ via its dedicated application interface. When any challenger $\mathcal{C}_{\mathcal{H}}$ retrieves this query, it is possible to return system parameters exchanged between $\Pi_i^{M_{ot_j}}$ and $\Pi_j^{E_{S_j}}$.
- *Send* (Π_i^X, M_{sg}) This query composes a query message Q_A and collects its response according to the key exchange protocol.
- *Corrupt*$_{M_{ot}}$ (Π_i^X) Using this query, $\mathcal{A}_{\mathcal{D}}$ exploits the query instance to extract storage information on communication entities M_{ot_j} and E_{S_j} i.e., preshared key ps_k.
- *Reveal* (Π_i^X) This query generates a forged instance to produce valid session key sk in response while given instance Π_i^X remains in its accepted state.
- *Trial* (Π_i^X) This query is generated once and validates the semantic security of sk. Moreover, this instance leaves error E_R to generate two possible results: $E_R = 0$ is random integers, and $E_R = 1$ is a session key.

Definition 1 - Accepted State While the given instance (Π_i^X) retrieves its accepted state using the last transmission of the key exchange protocol, it is possible to construct the session identifier to re-arrange the message sequence in proper order.

Definition 2 - Relationship Consider two given instances to relate the partners (Π_i^X) and $(\Pi_i^{\overline{X}})$ that (1) the given instances are accepted in their state of occurrence; (2) the given instances compute proper session key sk to mutually authenticate the communication entities, and (3) the given instances have mutual partners to establish secure communication.

Key Freshness The given instances (Π_i^X) and $(\Pi_i^{\overline{X}})$ use the property of key freshness if established session key sk is not associated with any $\mathcal{A}_{\mathcal{D}}$.

The proposed BAPP framework can be infiltrated by $\mathcal{A}_{\mathcal{D}}$ only if $\mathcal{A}_{\mathcal{D}}$ guesses its key ps_k to authenticate computed values M_{P-CS}, MT_{CS-ES}, E_{ES-CS}, C_{CS-P}, and C_{CS-P} accurately. Therefore, obtaining the secret session key is attributed to $\mathbf{A}_{\mathbf{DV}_{\mathcal{A}_{\mathcal{D}}}^{\mathbf{BAPP}}}(t)$ by which it is possible to obtain secret session key sk characterized by $\mathbf{A}_{\mathbf{DV}_{\mathcal{A}_{\mathcal{D}}}^{\mathbf{C-DH}}}(t)$.

Theorem 1. Secret session key sk of the proposed BAPP framework can be impaired by any $\mathcal{A}_{\mathcal{D}}$ during computing time t while the probability of obtaining $\mathbf{A}_{\mathbf{DV}_{\mathcal{A}_{\mathcal{D}}}^{\mathbf{BAPP}}}(t)$ is characterized by

© 2026 IEEE. All rights reserved, including rights for text and data mining and training of artificial intelligence and similar technologies. Personal use is permitted, but republication/redistribution requires IEEE permission. See https://www.ieee.org/publications/rights/index.html for more information.

This article has been accepted for publication in IEEE Transactions on Cloud Computing. This is the author's version which has not been fully edited and content may change prior to final publication. Citation information: DOI 10.1109/TCC.2026.3656828

$$\mathbf{A_{DV}}_{\mathcal{A_D}}^{\mathbf{BAPP}}(t) \leq \frac{q_{Num_{Hash}}^2}{|Hash|} + \frac{2.q_{Num_{Send}}}{|D_{ID}|} + 2.\mathbf{A_{DV}}_{\mathcal{A_D}}^{\mathbf{C\text{-}DH}}(t) \quad (1)$$

where $q_{Num_{Hash}}$ is the number of computed queries executed by $\mathcal{A_D}$ to explore the hash function, while $q_{Num_{Send}}$ is the number of computed queries provided by $\mathcal{A_D}$ to process the message transmission. $|Hash|$ is the functional value of the hash function, and D_{ID} is the computing size of the dictionary to derive the real identity of the device. Also, $\mathbf{A_{DV}}_{\mathcal{A_D}}^{\mathbf{C\text{-}DH}}(t)$ reveals the benefits to $\mathcal{A_D}$ from violating computational problem C_{DH} over t.

Proof. This proof holds five game scenarios $Game_0$ to $Game_4$ which represent $\mathcal{Z}$ to define winning of the game against $\mathcal{A_D}$ by inferring the result of *Trial* (Π_i^X). The observed result uses $\mathbf{P_R[Z_j]}$ to denote the probability of winning the scenario against $\mathcal{A_D}$. The scenarios are as follows.

- $Game_0$**:** $\mathcal{A_D}$ applies a real-time attack (e.g., eavesdropping) on the proposed BAPP framework and endures to retrieve the values M_{P-CS}, MT_{CS-ES}, E_{ES-CS}, C_{CS-P}, and C_{CS-P}. Specifically, this game is not associated with any query to guess the involved parameters. Thus, it derives
$$\mathbf{A_{DV}}_{\mathcal{A_D}}^{\mathbf{BAPP}}(t) = |2.\mathbf{P_R[Z_0]} - 1|. \quad (2)$$
- $Game_1$**:** $\mathcal{A_D}$ operates in a similar to $Game_0$ to overhear the message transmission that uses query ($\Pi_i^{M_{ot_j}}$,$\Pi_j^{E_{S_j}}$) to establish communication among the involved participants: P_i, E_{S_j}, and C_S. The participants exploit message transmissions $\{MA_i,\ M_1,\ MT_1,\ MT_{CS-ES},\ M_{P-ES},\ ts_1,\ ts_2\}$ and $\{E_1, E_{ES-CS}, E_{ES-P}, ts_3, ts_4\}$ to derive the desired value for sk. If it is 1, the desired sk is obtained. Otherwise, the obtained result is a random number. Importantly, session key sk derived by E_{S_j} is $sk = h_2(r_i \| r_k \| XT_i)$ whereas the key obtained by P_i is similar to E_{S_j} in order to examine its authenticity by checking if $E_{ES-P}^* \stackrel{?}{=} E_{ES-P}$. Considering this fact, $\mathcal{A_D}$ cannot find X_i, r_i, and r_k to authorize the connectivity with C_S. Since $\mathcal{A_D}$ has no hope of winning $Game_1$, it can obtain
$$\mathbf{P_R[Z_0]} = \mathbf{P_R[Z_1]} \quad (3)$$
- $Game_2$**:** $\mathcal{A_D}$ executes query functions $Hash()$ and Send (Π_i^X, M_{sg}) to collect secret information on the session key. Moreover, the executed functions explore $\{MA_i,\ M_1,\ MT_1,\ MT_{CS-ES},\ M_{P-ES},\ ts_1,\ ts_2\}$ and $\{E_1, E_{ES-CS}, E_{ES-P}, ts_3, ts_4\}$ to provide secure message transmission between P_i and E_{S_j}. In key computations (i.e., sk), the parameters such as r_i and r_k are protected by using a hash function, which makes it harder for $\mathcal{A_D}$ to determine hash values because it ensures no collision in order to preserve the integrity of the data. Thus, it acquires
$$|\mathbf{P_R[Z_1]} - \mathbf{P_R[Z_2]}| \leq \frac{q_{Num_{Hash}}^2}{|Hash|} \quad (4)$$
- $Game_3$**:** Using $Game_2$, $\mathcal{A_D}$ executes the query *Corrupt*$_{M_{ot}}$ (Π_i^X) to infer the real identities of P_i and I_{ot_j}. However, $\mathcal{A_D}$ cannot find sk without r_i and r_k whereby the identities including P_i and M_{ot_j} are preserved to address privacy concerns such as secure data sharing and trustworthiness. In order to infer identities such as P_i and M_{ot_j}, $\mathcal{A_D}$ obtains the values of trusted parameters using identity dictionary D_{ID}. Thus, it obtains
$$|\mathbf{P_R[Z_2]} - \mathbf{P_R[Z_3]}| \leq \frac{q_{Num_{Send}}}{|D_{ID}|} \quad (5)$$
- $Game_4$**:** While applying this scenario, $\mathcal{A_D}$ attempts to retrieve the session key sk computed by P_i and E_{S_j} over *Modify* ($\Pi_i^{M_{ot_j}}$, $\Pi_j^{E_{S_j}}$). In order to extract the parameters involved in $\{MA_i, M_1, MT_1, MT_{CS-ES}, M_{P-ES}, ts_1, ts_2\}$ and $\{E_1, E_{ES-CS}, E_{ES-P}, ts_3, ts_4\}$, $\mathcal{A_D}$ tries finding the values of r_i and r_k. However, $\mathcal{A_D}$ cannot obtain any information of the parameters i.e., r_i and r_k owing to the hash digest value securing transmission against unauthorized data access. Most importantly, $\mathcal{A_D}$ cannot obtain the values associated with sk because they solve computational problem *C-DH* over t to establish secure connectivity. Thus, $\mathcal{A_D}$ can obtain
$$|\mathbf{P_R[Z_3]} - \mathbf{P_R[Z_4]}| \leq \mathbf{A_{DV}}_{\mathcal{A_D}}^{\mathbf{C\text{-}DH}}(t) \quad (6)$$

After executing the scenario in $Game_0$ to $Game_4$, $\mathcal{A_D}$ tries to obtain the desired result of Trial (Π_i^X) which has two possible outcomes (0 or 1) in order to protect the integrity of the message transmission. As a result,
$$\mathbf{P_R[Z_4]} = \frac{1}{2} \quad (7)$$
Dividing Eq.(1) by (2), we obtain
$$\frac{\mathbf{A_{DV}}_{\mathcal{A_D}}^{\mathbf{BAPP}}(t)}{2} = |P_R[Z_0] - \frac{1}{2}| \quad (8)$$
Using Eq. (2), we find
$$\frac{\mathbf{A_{DV}}_{\mathcal{A_D}}^{\mathbf{BAPP}}(t)}{2} = |P_R[Z_1] - \frac{1}{2}| \quad (9)$$
Using Eq.(6), we derive
$$\frac{\mathbf{A_{DV}}_{\mathcal{A_D}}^{\mathbf{BAPP}}(t)}{2} = |P_R[Z_1] - P_R[Z_4]| \quad (10)$$
Applying the above differential dilemma, we obtain
$$\begin{aligned} |P_R[Z_1] - P_R[Z_4]| &\leq |P_R[Z_1 - P_R[Z_3]| + |P_R[Z_3] - P_R[Z_4]| \\ &\leq |P_R[Z_1] - P_R[Z_2]| + |P_R[Z_2] - P_R[Z_3]| \\ &\quad + |P_R[Z_3] - P_R[Z_4]| \end{aligned} \quad (11)$$
Using Eq. (3) to Eq. (5), we acquire
$$\leq \frac{q_{Num_{Hash}}^2}{|Hash|} + \frac{2.q_{Num_{Send}}}{|D_{ID}|} + \mathbf{A_{DV}}_{\mathcal{A_D}}^{\mathbf{C\text{-}DH}}(t) \quad (12)$$
Using Eq. (7) to Eq. (12), we get
$$\frac{\mathbf{A_{DV}}_{\mathcal{A_D}}^{\mathbf{BAPP}}(t)}{2} \leq \frac{q_{Num_{Hash}}^2}{|Hash|} + \frac{2.q_{Num_{Send}}}{|D_{ID}|} + \mathbf{A_{DV}}_{\mathcal{A_D}}^{\mathbf{C\text{-}DH}}(t) \quad (13)$$
and
$$\mathbf{A_{DV}}_{\mathcal{A_D}}^{\mathbf{BAPP}}(t) \leq \frac{q_{Num_{Hash}}^2}{|Hash|} + \frac{2.q_{Num_{Send}}}{|D_{ID}|} + 2.\mathbf{A_{DV}}_{\mathcal{A_D}}^{\mathbf{C\text{-}DH}}(t) \quad (14)$$
Hence, $\mathcal{C_H}$ handles problem *C-DH* discreetly to prevent the leakage of system parameter between P_j and E_{S_j} with a strong possibility $\mathbf{A_{DV}}_{\mathcal{A_D}}^{\mathbf{BAPP}}(t) \leq \frac{q_{Num_{Hash}}^2}{|Hash|} + \frac{2.q_{Num_{Send}}}{|D_{ID}|} + 2.\mathbf{A_{DV}}_{\mathcal{A_D}}^{\mathbf{C\text{-}DH}}(t)$. ■

B. Informal Analysis

This section discusses the critical challenges for the proposed BAPP framework in the message transmission process among P_i, E_{S_j}, and C_S. The system parameters applied in the proposed framework consider the significant characteristics of data integrity, privacy, and authentication to provide resiliency against potential attacks such as impersonation, duplication, and masquerades. The subsequent proposition claims that the BAPP framework holds key properties, and withstands significant attacks to meet the design goals of the cloud-assisted IoMT.

1) $\mathcal{P_R}1$**-Mutual Authentication, Data Integrity, and Non-Repudiation** The above formal analysis using the RoR model shows that the proposed BAPP framework can prevent eavesdropping on P_i and E_{S_j} to secure message transmission. Moreover, the assumption proves that key computation is practically infeasible under *C-DH*. Considering identity protection and key verification,

© 2026 IEEE. All rights reserved, including rights for text and data mining and training of artificial intelligence and similar technologies. Personal use is permitted, but republication/redistribution requires IEEE permission. See https://www.ieee.org/publications/rights/index.html for more information.

This article has been accepted for publication in IEEE Transactions on Cloud Computing. This is the author's version which has not been fully edited and content may change prior to final publication. Citation information: DOI 10.1109/TCC.2026.3656828

$\mathcal{A}_\mathcal{D}$ cannot forge or compute $cert_j$ to perform proper key validation over E_{S_j} because it relies on $cert_j = h_1(id_{es} \| z_i) + ps_k.pu_{es}$ and $XT_i = h_1(MA_{list} \| ps_k \| x_i)$ to secure the shared data via M_{ot_j}. Thus, the proposed framework holds proper authentication, integrity, and non-repudiation for P_i and E_{S_j}.

2) $\mathcal{P}_\mathcal{R}2$**-Privacy-Preserving** To preserve the privacy of P_i and E_{S_j}, the proposed BAPP framework encases their credentials using proper pseudonym parameters, i.e., $RR_i = p_{id_i} \oplus h_1(mg_i \| R_{rq_i})$ without information from any trusted authorities. In order to extract the requisition parameters, $\mathcal{A}_\mathcal{D}$ requires $R_{rq_i} = h(p_{id_i} \| pwd_i)$ which demands the computations $VF_i = h_1(RR_i \| p_{id_i} \| R_{rq_i})$, and $M_{A_i} = h_1(VF_i).ps_k$ to verify clinical service with M_A. Thus, based on this intractable verification, the proposed framework holds the property of privacy-preserving.

3) $\mathcal{P}_\mathcal{R}3$**-Unlinkability** This means $\mathcal{A}_\mathcal{D}$ cannot generate a legal certificate $cert_j$ without three random integers r_i, z_i, and ps_k. On the other hand, $\mathcal{A}_\mathcal{D}$ cannot use two associated links to validate its source certificate with application interface M_{ot} owing to the chosen random integers.

4) $\mathcal{P}_\mathcal{R}4$**-Traceability** In the proposed BAPP framework, M_A acts as an authorized entity, but does not hold the real identities of other entities including P_i. M_{ot_j}, and E_{S_j} other than for the processing requests handled by C_S. Most importantly, P_i preserves its identity using RR_i to secure the shared data via M_{ot}. Unfortunately, E_{S_j} cannot preserve its identity because it transmits the real identity to C_S to handle clinical requests processed by M_A, and thus, M_A has the ability to trace the requisition service operating via C_S. As a result, the proposed framework achieves traceability.

5) $\mathcal{P}_\mathcal{R}5$**-Session Key Agreement** Session key agreement means that neither party (i.e., P_i and E_{S_j}) can exclusively find its respective session key sk to validate session establishment. Considering this fact in the proposed BAPP framework, P_i and E_{S_j} use $sk = h_2(r_i \| r_k \| XT_i)$ to offer secure connections. Both entities determine their sk at the time of key agreement to avoid session hijacking when accessing secret parameters $\{r_i, r_k\}$. Hence, the proposed framework holds the property of a session key agreement.

6) $\mathcal{P}_\mathcal{R}6$**-Anonymity** The nature of anonymity generally comes in two forms: 1) to protect the identity of the computing device i.e., M_{ot}; and 2) to guarantee untraceability in order to secure the action-pattern of data transmission. In view of this, the BAPP framework protects the clinical service processed by P_i using $R_{rq_i} = h(p_{id_i} \| pwd_i)$ while submitting its request to M_A. As a result, $\mathcal{A}_\mathcal{D}$ cannot directly extract P_i's identity to attempt falsified verification in order to corrupt the transmitted packets. Also, the randomness of p_{id_i} with r_i, r_j, and r_k makes it more complicated for $\mathcal{A}_\mathcal{D}$ to make a decision about sk to undermine system security. Hence, the proposed framework holds the property of device/user anonymity.

7) $\mathcal{P}_\mathcal{R}7$**-Forward Secrecy** Forward secrecy means that even if $\mathcal{A}_\mathcal{D}$ infers long-term secret key ps_k, $\mathcal{A}_\mathcal{D}$ cannot perform verification using $M_{A_i} = h_1(VF_i).ps_k$ because it is processed over a requisition initiated by S_C. Taking this processing request into account, $\mathcal{A}_\mathcal{D}$ cannot determine sk without prior computation of XT_i. As a result, the BAPP framework claims the property of forward secrecy.

8) $\mathcal{A}_\mathcal{TT}1$**-Resilient against the Impersonation Attack** It is worth noting that $\mathcal{A}_\mathcal{D}$ may fabricate legitimate transmission of a message and subsequently transmits it to other entities in order to impersonate a genuine entity. However, we shall prove that the proposed BAPP framework resists impersonation attacks. Assume $\mathcal{A}_\mathcal{D}$ tries to intercept message transmission $\{MA_i, M_1, M_{P-CS}, M_{P-ES}, ts_1\}$ processed by P_i where $M_1 = r_i \oplus h_2(XT_i \| MA_i)$, $M_{P-CS} = h_2(MA_i \| Z_i)$, and $M_{P-ES} = h_2(MA_i \| r_i \| XT_i)$. However, $\mathcal{A}_\mathcal{D}$ cannot complete the computation process successfully because a few source parameters $\{r_i, XT_i, MA_i\}$ are still unknown. Similarly, $\mathcal{A}_\mathcal{D}$ endeavors to act as a legitimate E_S to compose a message transmission $\{E_1, E_{ES-CS}, E_{ES-P}, ts_3, ts_4\}$ where $E_1 = r_k \oplus h_2(MA_i \| r_i \| XT_i)$, $E_2 = r_k \oplus h_2(r_j \| ts_3)$, and $MA_i^{New} = h_2(MA_i \| r_k)$ and re-transmits the information to C_S to retrieve the data sharing process. Regardless, $\mathcal{A}_\mathcal{D}$ cannot re-create the necessary information successfully because source parameters such as r_i, r_j, r_k, and XT_i are still undetermined. Thus, the proposed framework can resist impersonation attacks.

9) $\mathcal{A}_\mathcal{TT}2$**-Resilient against the Man-in-the-Middle Attack** While intercepting the system login and authentication process with proper message fabrication, $\mathcal{A}_\mathcal{D}$ may compile a legitimate message to target entity P_i. In one instance, $\mathcal{A}_\mathcal{D}$ attempts to generate a valid message transmissions $\{MA_i, M_1, M_{P-CS}, M_{P-ES}, ts_1\}$ and $\{MA_i, M_1, MT_1, MT_{CS-ES}, M_{P-ES}, ts_1, ts_2\}$ relying on C_S and E_S. Unfortunately, $\mathcal{A}_\mathcal{D}$ cannot complete its computation because a few source parameters, $\{M_1, M_{P-CS}, M_{P-ES}, MT_{CS-ES}, M_{P-ES}\}$ are unspecified. Similarly, in either C_S or E_S connectivity, $\mathcal{A}_\mathcal{D}$ cannot reproduce $\{MA_i, M_1, M_{P-CS}, M_{P-ES}, MT_{CS-ES}, M_{P-ES}\}$ since the significant parameters $\{r_i, r_j, r_k, x_i, x_j\}$ are not specified to authorize the message transmission. Thus, the proposed framework is resilient against man-in-the-middle attacks.

10) $\mathcal{A}_\mathcal{TT}3$**-Resilient against the Session Key Disclosure Attack** In an effort to secure a message request issued by P_i, E_{S_j}, and C_S, the proposed BAPP framework uses ps_k to configure the built-in gateway seamlessly. Additionally, both P_i and E_{S_j} use random integers r_i, r_j, and r_k as a part of the hidden/varying values to find their session key sk. As a result, $\mathcal{A}_\mathcal{D}$ cannot find a legitimate sk to provide connectivity with P_i via M_{ot}. Thus, the proposed BAPP is resilient against session key disclosure attacks.

11) $\mathcal{A}_\mathcal{TT}4$**-Resilient against the Replay Attack** In the proposed BAPP framework, the authentication, and key agreement phase uses source parameters such as timestamp ts and random integer r to preserve the integrity of the data. Assume $\mathcal{A}_\mathcal{D}$ attempts to misuse the messages of a previous transmission in an effort to initiate the re-transmission process. However, this crucial act can be traced via discovered timestamps in order to immediately reject the processing request. Thus, the proposed framework is resilient against replay attacks.

12) $\mathcal{A}_\mathcal{TT}5$**-Resilient against the Privileged-Insider Attack** In the proposed BAPP framework, entities such as P_i and E_{S_j} do not process their credentials with trusted authority. Despite this, M_A discovers a valid database during the deployment phase to handle requisition services in the cloud-assisted IoMT. Moreover, M_A stores the credentials of E_{S_j} temporarily in its database to validate the legitimacy of E_{S_j} which provides secure connectivity between P_i and M_{ot_j} in sharing the data with C_S. Since M_A does not hold any valid credentials of P_i and M_{ot}, $\mathcal{A}_\mathcal{D}$ cannot threaten as a privileged insider to retrieve the secret information (i.e., P_i and M_{ot}). Thus, the proposed framework is resilient against privileged-insider attacks.

VI. Results and Discussion

This section presents a comprehensive analysis of the proposed BAPP framework and other relevant state-of-the-art approaches in terms of transmission, computation, communication, and storage to determine the level of system security.

© 2026 IEEE. All rights reserved, including rights for text and data mining and training of artificial intelligence and similar technologies. Personal use is permitted, but republication/redistribution requires IEEE permission. See https://www.ieee.org/publications/rights/index.html for more information.

This article has been accepted for publication in IEEE Transactions on Cloud Computing. This is the author's version which has not been fully edited and content may change prior to final publication. Citation information: DOI 10.1109/TCC.2026.3656828

A. Analysis I: Transmission Overhead

In this analysis, metrics including transmission time and computation complexity consider bilinear pairing and elliptic-curve group schemes over super-singular and Kobilitz schemes to examine message overheads. The former schemes apply $\hat{E} : y^2 = x^3 + x \pmod p$ whereas the latter uses $E : y^2 = x^3 + ax + b \pmod p$ to maintain a similar level of system security. The lengths in bilinear pairing and elliptic curve are as follows: q is a prime integer for $512bit$ and $160bit$ lengths and G_1/G is a cyclic group for $1024bit$ and $320bit$ lengths, to ensure security similar to the $512bit$ RSA algorithm.

TABLE IV: Comparative analysis of transmission overhead

Scheme	Single Message (bit)	N Messages (bit)
BAPP Framework	$\|G\|$=360	$\|G\|$=360
Rajsekaran et al. [31]	$2\|G_1\|+Z_n^* \in (p,q)$=2720	$(n+1)\|G_1\|+Z_n^* \in (p,q)$ =(n+1)1024+320
Gupta et al. [16]	$\|G_1\|+\|Z_q^*\|$=1184	$(n+1)\|G_1\|+\|Z_q^*\|$ =(n+1)1024+160
Gong et al. [35]	$\|G\|+\|Z_q^*\|$=480	$\|G\|+\|Z_q^*\|$=480
Liu et al. [36]	$2\|G\|$=640	$2\|G\|$=640
Wang et al. [25]	$2\|G\|+\|Z_q^*\|$=800	$2\|G\|+\|Z_q^*\|$=800
Tao et al. [26]	$\|G\|+\|Z_q^*\|$=480	$\|G\|+\|Z_q^*\|$=480
Ma and Cheng [15]	$\|G\|+\|Z_q^*\|$=480	$\|G\|+\|Z_q^*\|$=480
Vangala et al. [28]	$\|G\|+\|Z_q^*\|$=480	$n\|G\|+\|Z_q^*\|$=320n+160
Zhang et al. [11]	$3\|G\|+\|Z_q^*\|$=1120	$3\|G\|+\|Z_q^*\|$=1120
Liu et al. [14]	$\|G\|+\|Z_q^*\|$=480	$\|G\|+\|Z_q^*\|$=480
Bao et al. [13]	$3\|G\|+\|Z_q^*\|$=1120	$n\|G\|+\|Z_q^*\|$=960n+160
Zhang et al. [29]	$2\|G\|+\|Z_q^*\|$=800	$2\|G\|+\|Z_q^*\|$=800
Zhong et al. [37]	$\|G\|+\|Z_q^*\|+\|p\|$=640	$\|G\|+\|Z_q^*\|+\|p\|$=640
Bilinear Paring: $E{:}G_1 \times \hat{G}_1 \rightarrow G_T$ $G_1(p)$ $\|p\|=512bit$ $q=160bit$ $\|G_1\|=1024bit$ Elliptic-Curve: Pairing-Free $G(p)$ $\|p\|=160bit$ $q=160bit$ $\|G\|=320bit$		

With the objective of fairness, the parameters shown in Table IV were used to maintain a similar level of security in either bilinear-pairing or elliptic-curve schemes. Additionally, we set $160bit$ as the length of one-way hash function $h(.)$ and pre-shared key ps_k to operate five communication metrics including certificate $cert_j$, timestamp ts, pseudonym of E_{S_j} and R_{rq_i}, public pu_{es}, and private key pv_{es} of E_{S_j} during the transmission process. In order to achieve fairness in data sharing, the proposed BAPP framework utilizes server connectivity i.e., E_{S_j} via M_A to perform the message verification process with a trusted parameter $cert_j = h_1(id_{es} \parallel z_i) + ps_k.pu_{es}$. It is worth noting that to maintain fairness during data sharing, communication entities P_i and E_{S_j} apply the set length of $cert_j$ and ps_k. In the analysis, research in [16], [28], [31] and [13] applied bilinear pairing, whereas studies in [11], [14], [15], [25], [26], [29], [35]–[37] employed an elliptic-curve scheme. From Table IV, we can see that the overheads for a single transmission in bilinear pairing schemes [13], [16], [28], [31] and elliptic-curve schemes [11], [14], [15], [25], [26], [29], [35]–[37] are higher than the proposed framework. Also, for an aggregate signature applying RSA, the overheads for message transmission in [16], [28], [31], [35], [36], and [13] was equivalent to the available number of accumulated transmitted messages. In contrast, the transmission overhead for the proposed BAPP framework and other schemes in [11], [14], [15], [25], [26], [29], [35]–[37] hold a stable value to complete the communication process between P_i and E_{S_j}. The analytical results are shown in Table V.

As stated in Table IV, compared with [13], [25], and [37], the overhead for a single transmission is lessened in the proposed BAPP framework by $(1120-360)/1120 = 67.86\%$,$(800-360)/800 = 55\%$, and $(640-360)/640 = 43.75\%$, respectively. Considering 1500 messages, the proposed framework has less transmission overhead than schemes in [11], [13]–[16], [25], [26], [28], [29], [31], [35]–[37] including bilinear paring and elliptic-curve schemes, as shown in Table V.

TABLE V: Performance analysis of the proposed BAPP framework and other authentication schemes in terms of transmission efficiency

Scheme	Single Message (%)	<1500> Messages (%)
BAPP Framework	Message Cost = 360 bit	
Rajasekaran et al. [31]	$(2720-360)/2720 = 86.76$	99.98
Gupta et al. [16]	$(1184-360)/1184 = 69.59$	99.98
Gong et al. [35]	$(480-360)/480 = 25$	25
Liu et al. [36]	$(640-360)/640 = 43.75$	43.75
Wang et al. [25]	$(800-360)/800 = 55$	55
Tao et al. [26]	$(480-360)/480 = 25$	25
Ma and Cheng [15]	$(480-360)/480 = 25$	25
Vangala et al. [28]	$(480-360)/480 = 25$	99.93
Zhang et al. [11]	$(1120-360)/1120 = 67.86$	67.86
Liu et al. [14]	$(480-360)/480 = 25$	25
Bao et al. [13]	$(1120-360)/1120 = 67.86$	99.98
Zhang et al. [29]	$(800-360)/800 = 55$	55
Zhong et al. [37]	$(640-360)/640 = 43.75$	43.75

B. Analysis II: Computation Overhead

This analysis applies the MIRACL library to compare the computation overhead of the proposed BAPP framework and related schemes in [11], [13]–[16], [25], [26], [28], [29], [31], [35]–[37]. In order to maintain generality, the proposed framework and other related schemes applied similar execution times as seen in [36]. Moreover, the cryptographic library i.e., MIRACL was installed on an Intel Corei7-12700H CPU at 4.7 GHz with 16GB RAM to operate the cryptographic functions. The execution times of the relevant functions are outlined in Table VI. In the proposed BAPP framework, the user entity holds nine hash functions and two XOR operations whereas the server/responder has 12 hash functions and six XOR operations to complete the process of session key generation and verification during the login and authentication phase. In consequence, the computation cost for P_i and E_{S_j} is $9T_H + 2T_E \approx 6.626ms$ and $12T_H + 6T_E \approx 2.922ms$ which eventually finds its total cost $\approx 9.548ms$ to ensure the process of session key establishment. In a similar way, the other related schemes include the computation costs of the user and the server/responder entity to determine their cumulative costs, which are $\approx 94.078ms$ [31], $\approx 83.81ms$ [16], $\approx 50.264ms$ [35], $\approx 66.081ms$ [36], $\approx 74.146ms$ [25], $\approx 14.837ms$ [26], $\approx 71.45ms$ [15], $\approx 297.247ms$ [28], $\approx 189.812ms$ [11], $\approx 72.156ms$ [14], $\approx 510.649ms$ [13], $\approx 48.763ms$ [29], and $\approx 144.807ms$ [37]. Based on the computation result shown in Table VI, we see that the proposed BAPP framework uses lightweight cryptographic operations for greater cost efficiency, compared to other related schemes, in order to improve the transmission rate performance for communication systems like eHealthcare.

C. Analysis III: Verification Delay Ratio

In this analysis, a host system was installed on an Intel Corei7-12700H CPU with 16GB RAM clocked at 4.7 GHz to drive the programming tool and the adoptive algorithms (i.e., SM2 elliptic-curve and bilinear pairing schemes) on Windows 11. To verify the period of delay during transmission, the proposed BAPP framework and other related schemes execute the computations based on the size of the data packet. In order to maintain generality, the session establishment phase prefers proper encryption, verification, and key computation between the user (i.e., P_i and server E_{S_j}) to transfer the encrypted communication to C_S via an application

© 2026 IEEE. All rights reserved, including rights for text and data mining and training of artificial intelligence and similar technologies. Personal use is permitted, but republication/redistribution requires IEEE permission. See https://www.ieee.org/publications/rights/index.html for more information.

This article has been accepted for publication in IEEE Transactions on Cloud Computing. This is the author's version which has not been fully edited and content may change prior to final publication. Citation information: DOI 10.1109/TCC.2026.3656828

TABLE VI: Comparative analysis of the proposed BAPP framework with other related schemes in terms of computation efficiency

Scheme	User Entity (ms)	Server/Responder Entity (ms)	Total Cost (ms)
BAPP Framework	$9T_H+2T_E\approx6.626$	$12T_H+6T_E\approx2.922$	≈9.548
Rajasekaran et al. [31]	$2T_{BP}+5T_E\approx77.86$	$2T_{BP}+4T_{PA}+2T_{PM}+2T_H\approx16.218$	≈94.078
Gupta et al. [16]	$3T_{PM}+1T_{PA}+1T_{BP}+1T_H\approx70.964$	$3T_{PM}+1T_{PA}+1T_{BP}+1T_H\approx12.846$	≈83.81
Gong et al. [35]	$4T_{PA}+3T_{PM}+7T_H+1T_E\approx45.362$	$2T_{PM}+2T_{PA}+8T_H\approx4.902$	≈50.264
Liu et al. [36]	$4T_{PM}+3T_{PA}+4T_H\approx54.04$	$5T_{PM}+3T_{PA}+6T_H\approx12.041$	≈66.081
Wang et al. [25]	$1T_E+1T_{PA}+3T_{PM}+2T_H\approx42.184$	$2T_E+5T_{PA}+13T_{PM}+8T_H\approx31.962$	≈74.146
Tao et al. [26]	$1T_E+12T_{PA}+6T_H\approx14.212$	$1T_E+6T_{PA}+2T_H\approx0.625$	≈14.837
Ma and Cheng [15]	$1T_E+5T_{PA}+6T_H+4T_{PM}\approx58.9$	$1T_E+5T_{PA}+6T_H+5T_{PM}\approx12.55$	≈71.45
Vangala et al. [28]	$6T_E+4T_{PA}+26T_H+8T_{PM}+2T_{BP}+1T_{E/D}\approx263.784$	$5T_E+2T_{PA}+20T_H+4T_{PM}+2T_{BP}+1T_{E/D}\approx33.463$	≈297.247
Zhang et al. [11]	$6T_{PA}+9T_H+9T_{PM}+1T_{E/D}\approx157.918$	$6T_{PA}+8T_H+7T_{PM}+1T_{E/D}\approx31.894$	≈189.812
Liu et al. [14]	$2T_{PA}+3T_H+4T_{PM}\approx53.046$	$2T_{PA}+2T_H+8T_{PM}\approx19.11$	≈72.156
Bao et al. [13]	$1T_H+21T_{PA}+26T_{PM}+2T_{BP}\approx413.654$	$4T_H+21T_{PA}+31T_{PM}+4T_{BP}\approx96.995$	≈510.649
Zhang et al. [29]	$3T_H+1T_E+2T_{PM}\approx28.646$	$3T_H+2T_E+8T_{PM}+5T_{PA}\approx20.117$	≈48.763
Zhong et al. [37]	$8T_H+6T_{PA}+9T_{PM}\approx120.82$	$6T_H+5T_{PA}+10T_{PM}\approx23.987$	≈144.807
User: $T_{BP}\approx31.75$, $T_{PM}\approx12.74$, $T_{PA}\approx0.896$, $T_E\approx2.872$, $T_H\approx0.098$, and $T_{E/D}\approx37/75$ Server/Responder: $T_{BP}\approx5.671$, $T_{PM}\approx2.38$, $T_{PA}\approx0.023$, $T_E\approx0.463$, $T_H\approx0.012$, and $T_{E/D}\approx10/15$			

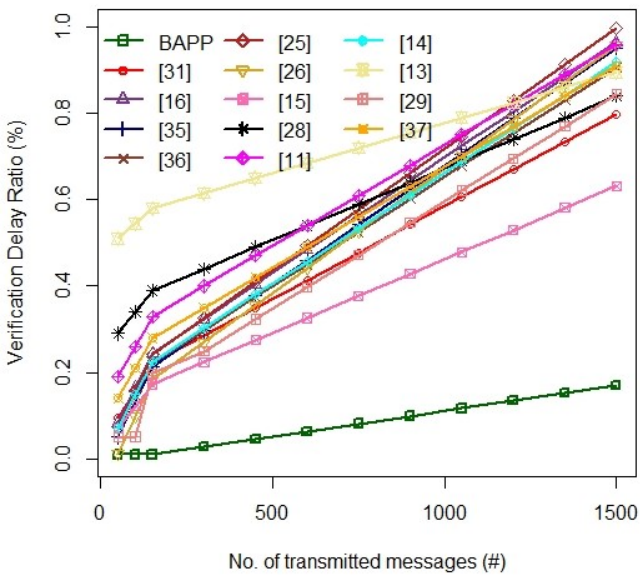

Fig. 4: Verification Delay Ratio.

interface like M_{ot}. In consequence, C_S verifies the key freshness using $E^*_{ES-CS}=h_2(MA_i \| S_i \| r_j \| ts_3)$ to outsource the requisition service to M_{ot} via the proper verification process in order to continue the transfer request. Fig. 4 shows a comparison of the verification delay ratio for the proposed framework and other related schemes.

While verifying the transmission delay of the proposed BAPP framework and other related schemes running over 100 times with a data size of $128bytes$, we found that the proposed framework recorded a minimum delay of $\approx 9.548ms$ until the transmission exceeded 150 messages. However, the other related schemes reached a transmission delay of $\approx 14.837ms$ to $\approx 510.649ms$ when the transmission surpassed 50 messages. Additionally, in comparison with the other related schemes, the proposed BAPP framework had the shortest delay $0.1702sec$, although the number of message transmissions initiated by P_i to process service requisitions via C_S exceeded 1500. Importantly, the verification speed of the proposed framework was higher than the related schemes at 78.67% [31], 82.34% [16], 82.12% [35], 81.21% [36], 82.95% [25], 82.23% [26], 73.1% [15], 79.74% [28], 82.27% [11], 81.48% [14], 80.98% [13], 79.85% [29], and 81.3% [37].

D. Analysis IV: Communication Overhead

This analysis considers the computing parameters involved in exchanging communications with real-time entities to determine proper session key computation. To compute the communication cost, the proposed BAPP framework and other related schemes assume the size of the transmitted parameters in $bits$. As a consequence, key identities k_i, dynamic index d_i, random nonce r_n, hash function output h_f, timestamp ts, elliptic-curve cryptography e_c, and group element g_e were set to $160bits$, $160bits$, $160bits$, $160bits$, $32bits$, $320bits$, and $1024bits$, respectively. It is worth noting that an elliptic-curve point $P=(C_x,C_y)$ applies $320bits$ while showing equivalent to the $1024bits$ RSA cryptosystem. In this comparison, the proposed BAPP framework and other related schemes assessed the exchange of message transmission during the login and authentication phase to find the cost efficiency. In the proposed framework, successful key computation requires four message rounds $\{MA_i, M_1, M_{P-CS}, M_{P-ES}, ts_1\}$, $\{MA_i, M_1, MT_1, MT_{CS-ES}, M_{P-ES}, ts_1, ts_2\}$, $\{E_1, E_{ES-CS}, E_{ES-P}, ts_3, ts_4\}$, and $\{E_1, C_{CS-P}, E_{ES-P}, ts_3, ts_4\}$ to secure data sharing between P_i and C_S. The message rounds contain one identity, eight hash functions, four timestamps, four random integers, and two elliptic-curves to determine the communication cost at $[1k_i\times160+8h_f\times160+4ts\times32+4r_n\times160+2e_c\times320]=2848bits$. Similarly, the related schemes initiated their message transmission with associated entities like servers to find the cost efficiency of the communication system.

Rajasekaran et al. [31] asked to process four message rounds ($\{DA_{DI}, M_i^k, N_i^k, P_i, Q_i\}$, $\{\theta_1,\theta_2,\theta_3,\theta_4\}$, $\{\mu_1,\mu_2,\mu_3,\phi_1,\phi_2,\phi_3\}$, and $\{H_i, I_i, \beta_1, \beta_2, \beta_3\}$) in order to find its efficiency $[5k_i\times160+6e_c\times320+2r_n\times160+4ts\times32]=3168bits$. Gupta et al. [16] employed four transmission rounds $\{\psi_1,\sigma_1\}$, $\{\psi_2,\sigma_2\}$, $\{\psi_2,P_0\}$, and $\{\psi_1,P_0\}$, to complete the verification and key computation trials. The cost efficiency in the Gupta et al. scheme is $[2k_i\times160+4h_f\times160+5e_c\times320+5r_n\times160]=3360bits$. Similarly, the other related schemes use four [35], three [36], five [25], four [26], four [15], four [28], six [11], four [14], four [13], four [29], and three [37] message rounds for cumulative cost efficiencies at $[3k_i\times160+5r_n\times160+9h_f\times160+6e_c\times320]=4640bits$, $[2k_i+8r_i\times160+4h_f\times160+8e_c\times320]=4800bits$, $[2k_i\times160+2r_n\times160+10e_c\times e_c+3h_f\times160]=4320bits$, $[4k_i\times160+3r_n\times160+10h_f\times160+2e_c\times320]=3360bits$, $[3k_i\times160+5r_n\times160+10h_f\times160+6e_c\times320]=4800bits$, $[4k_i\times160+8r_n\times160+14h_f\times160+5e_c\times320+3ts\times32]=5856bits$, $[2k_i\times160+4r_n\times160+17h_f\times160+5e_c\times320+5ts\times32]=5440bits$,

© 2026 IEEE. All rights reserved, including rights for text and data mining and training of artificial intelligence and similar technologies. Personal use is permitted, but republication/redistribution requires IEEE permission. See https://www.ieee.org/publications/rights/index.html for more information.

This article has been accepted for publication in IEEE Transactions on Cloud Computing. This is the author's version which has not been fully edited and content may change prior to final publication. Citation information: DOI 10.1109/TCC.2026.3656828

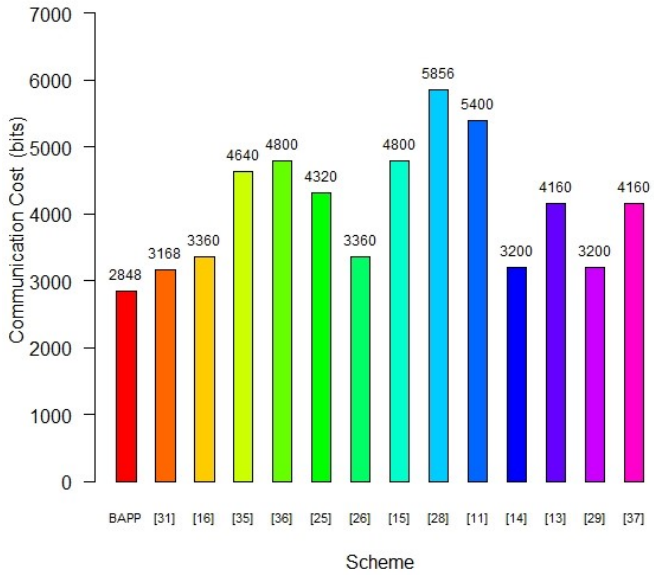

Fig. 5: Communication Cost.

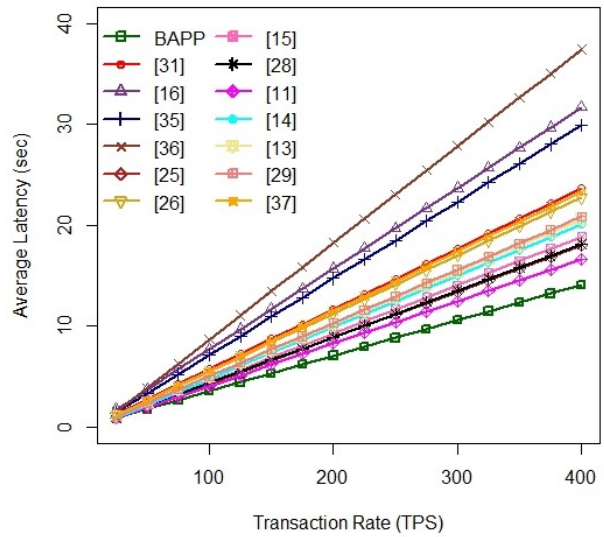

Fig. 6: Average Authentication Delay.

$[3k_i \times 160 + 4r_n \times 160 + 5h_f \times 160 + 4e_c \times 320] = 3200bits$, $[2k_i \times 160 + 8r_n \times 160 + 4d_i \times 160| + 6e_c \times 320] = 4160bits$, $[2k_i \times 160 + 4r_n \times 160 + 6h_f \times 160 + 4e_c \times 320] = 3200bits$, $[3k_i \times 160 + 6r_n \times 160 + 11h_f \times 160 + 3e_c \times 320] = 4160bits$, respectively to compute or verify the session key process. Fig. 5 shows a comparative analysis of communication cost for the proposed BAPP framework and other related schemes [11], [13]–[16], [25], [26], [28], [29], [31], [35]–[37].

From Fig. 5, we can see that the proposed framework consumes a communication cost lower than the other related schemes to improve transmission efficiency for P_i and E_{S_j} in order to perform data sharing with C_S. Above all, the proposed BAPP framework can provide better data connectivity with the application interface via M_{ot} to meet the design requirements of cloud-assisted medical application systems like medical diagnoses and databases.

E. Analysis V: Average Authentication Delay

Due to the limitation on processing capacity and computing power in a massive IoT environment like eHealthcare, registered entities such as E_{S_j} and M_{ot_j} were utilized for statistical analysis in terms of time consumption. To find the authentication delay in the proposed BAPP framework and other related schemes[11], [13]–[16], [25], [26], [28], [29], [31], [35]–[37], E_{S_j} was simulated over a cloud platform provided by Amazon Web Service (AWS). The platform was equipped with 2×Intel Deca core Xeon E5-2630 with 128GB RAM clocked at 2.20GHz operating Ubuntu 20.04.6 LTS in order to process the requisition service provided by a user like P_i via the application interface with a dedicated network. Additionally, a computing device like M_{ot_j} emulated its functional performance over a 2.1GHz ARM Cortex-A55 to oversee connectivity with a smartphone like Google Nexus. To analyze the authentication delay with procedural fairness, we presume that the property of mutual authentication might be impeded by a new type of malicious attacks against P_i and E_{S_j} to forge legitimate packet transmission. Since the arrival of malicious attacks is unpredictable, we considered such potential attacks to be anonymous.

During the login and authentication phase to validate mutual authentication, the proposed BAPP framework and other related schemes might experience a few service disruptions due to anonymous attacks. In general, we can determine the delay period for computations during the authentication process among the entities, even with the possibility of a few known attacks (like key impersonation) to forge transmitted packets. Unfortunately, in anonymous attacks, the computation process is uncertain in verifying mutual authentication. Therefore, we designed two different types of anonymous attacks using C++ to verify the delay period for authentication under the proposed BAPP framework and the other related schemes. At each stage of the authentication process, service connectivity for the proposed framework and other schemes was intermittently disrupted by anonymous attacks. At the time of simulation, we consistently vacillate the ratio of the anonymous attacks to determine the delay period for the proposed framework and other related schemes [11], [13]–[16], [25], [26], [28], [29], [31], [35]–[37].

Most importantly, all the schemes simulated their authentication process over 6000 times to determine the connectivity delay period for P_i and E_{S_j}. From the simulations, we can see that the computation delay period can be measured effectively while the ratio of anonymous attacks changed invariably compared to known attacks. The performance ratio of the delay period is defined as

$$Auth_{del} = \frac{[del_{uk} \times tm_{uk}] + [del_k \times tm_k]}{tm_k} \tag{15}$$

where $Auth_{del}$ is the delay period of the authentication process, del_{uk} is the unknown delay period, tm_{uk} is the unknown time period, del_k is the known delay period, and tm_k is the known time period.

The simulated results are shown in Fig. 6, which represents the ratio of anonymous attacks over the authentication delay period for the proposed BAPP framework and other related schemes. From Fig. 6, we observe that the proposed framework incurred a minimum delay period $\approx 340.5ms$, even though the ratio of anonymous attacks varied from 0 to 0.9. Importantly, the proposed BAPP could maintain better stability in terms of delay period while the anonymous attacks deliberately raise the processing ratio. As a result, we claim that the proposed framework has its own advantages under various anonymous attacks to improve the transmission efficiency rate compared to the other related schemes [11], [13]–[16], [25], [26], [28], [29], [31], [35]–[37].

© 2026 IEEE. All rights reserved, including rights for text and data mining and training of artificial intelligence and similar technologies. Personal use is permitted, but republication/redistribution requires IEEE permission. See https://www.ieee.org/publications/rights/index.html for more information.

This article has been accepted for publication in IEEE Transactions on Cloud Computing. This is the author's version which has not been fully edited and content may change prior to final publication. Citation information: DOI 10.1109/TCC.2026.3656828

F. Analysis VI: Using Blockchain Network

To examine the performance metrics, a dedicated system was configured with an Intel Corei7-12700H CPU @$4.7GHz$ with 16GB RAM and a 1TB HDD. The proposed BAPP framework and the schemes in [11], [13]–[16], [25], [26], [28], [29], [31], [35]–[37] used the Solidity programming language to create smart contracts. In addition, JavaScript and ReactJS were chosen for the development of front-end applications. The proposed framework and other related schemes used a docker container to execute authentication frameworks that included computing peers, medical devices, and edge servers to maintain copies of the data transactions and the state of the ledger. A suitable decentralized system was designed to integrate the communications of a back-end blockchain that uses NodeJS as an interpreter. It had four different libraries (web3, solcJ, Mocha, and Next.js router) to mutually connect entities. The purpose of web3 was to establish interactions between blockchain and smart contracts, while solcJ designs code in Solidity to provide interactions with the available smart contracts. Mocha is a framework to test smart contract interactions, and the Next.js router handles routing to achieve proper decentralization [39].

Using blockchain, the algorithmic structures of the proposed and other related schemes including registration, login, and key authentication were evaluated to analyze different smart contracts of the application interfaces in a hybrid network. The networking system processes the proof of identity via proper authentication, which allows users to access the hashing data associated with the Ethereum address to authorize the login request. The generated requests include the genesis block which is associated with the generated files required by the computing peers, buyer, and organization. During the process of authorization, the blockchain initializes the distributed ledger to use the crypto tool (available in Hyperledger Fabric v1.4.1) to verify the source attributes of the proposed BAPP and other related schemes. In the simulation, the networking system was configured with the maximum number of M_{ot} to generate their logistic data acquired through proper authentication requests managed by computing peers. These peers were loaded on C_S with different computing sets 5, 10, 15, and 20 to examine the communication metrics of the blockchain networks.

The dedicated network utilized the session-based voting PBFT consensus via Hyperledger Fabric which analyzes the service requests of the computing peers using a service subscription list to examine the encoding results of user identities namely public keys and signatures via *Data Sample* [40]. The systematic flow structures are as follows.

1) Applied endorsement policy to test the cost of diverse smart contracts along with increasing network size where the computing peers can endorse their transaction proposal with *Data Index*.
2) Built a fault tolerance system using session-based voting PBFT consensus to generate a series of processing stages that are as follows.
   - Decide whether the computing peer has a credible authentication request or not to validate the process.
   - Automate a technical infrastructure of the application interfaces via a smart contract to validate the transaction and also distribute it to the computing peer to determine whether the copy of a record is immutable or not.
   - Operate the request via the transaction pool to confirm whether the computing peer has its legal record added to the blockchain network or not.
   - Synchronize the data routed through C_S to deliver system response i.e., success or failure to maintain execution cost of *saveInfo*, *deleteInfo*, and *UpdateInfo*.
   - Use *queryProcessing* to analyze the transaction records that probe data blocks of the proposed BAPP and other related schemes to evaluate their authentication procedures i.e., with *Data Encrypt*.
   - Assess the communication intervals of the authentication process with more computing peers to inspect the permission-based authentication service and to guarantee the feasibility of deployment.
   - Record the service information along with timestamps into an *authentic ledger (AL)* to validate the robustness of the proposed BAPP and other related schemes.
3) Investigated the transaction proposal written into the blockchain to check whether the user has the authorized login to interpret *AL* or not.
4) Verified mining network via *proof of blocks* using E_S to validate the transaction records of the proposed BAPP and other related schemes to plot various quality metrics such as committed transaction, latency, and throughput.

In our analysis, a real-time function considers the number of contracts in order to measure execution time. The proposed BAPP framework and other related schemes apply their authentication strategies in a multiple blockchain structure to examine execution costs. To compare the proposed framework and other related schemes, a private blockchain structure was chosen with two medical enterprises and two computing peers. BAPP and the other schemes effectively applied their framework strategies to test implicit scenarios over different transaction rates of ≈ 50 to 250 TPS. Blockchain allows any patient to read/write data into a distributed ledger that undergoes process verification to set a node as a legal entity over a network connection. Also, blockchain allows only one entity to gain system control that predetermines user availability. Lastly, it ensures privacy and transparency that effectively utilizes power consumption to analyze the network performance.

In order to analyze the network behavior, parallel mining was chosen which executes different levels of computing peers i.e., patient/doctor over the cloud to share the computing services. In a systematic assessment, each round considered 1000 transactions to analyze the performance of BAPP and the other related schemes. Moreover, the assessment included two enterprise networks and two computing peers to measure the arrival rate of the transactions, which varied from 50 to 250 TPS. Fig.7a shows committed transactions over time. To analyze this metric effectively, the proposed BAPP framework and other schemes prefer a scenario of two medical enterprises and two computing peers. This metric allows the network to perform a transaction between the enterprise and the peer according to the time period required to finish. The execution time (i.e., 50 to 300 sec) with an interval of 50 sec is typically shown on the x-axis, and the number of committed transactions i.e., 0 to 8000 with a recession of 2000 is on the y-axis to verify the successful transaction of parallel mining.

The scenario of two medical enterprises and two computing peers exhibited the transaction behavior to validate a few basic impacts of the healthcare applications including login, pay, and treatment/diagnosis accessed through a proper authentication process. To validate the integrity of the blockchain network, this scenario examined the proposed BAPP framework and other schemes based on different transaction rates. The examination result shows that the proposed framework needed 300 sec to reach 7620 transactions, whereas the other frameworks completed 5500 [31], 4850 [16], 6680 [35], 3630 [36], 6720 [25], 6740 [26], 6730 [15], 6720 [28], 7410 [11], 5270 [14], 5680 [13], 6435 [29], and 5995 [37] transactions, in the same time period. It is evident from the results that the time

© 2026 IEEE. All rights reserved, including rights for text and data mining and training of artificial intelligence and similar technologies. Personal use is permitted, but republication/redistribution requires IEEE permission. See https://www.ieee.org/publications/rights/index.html for more information.

This article has been accepted for publication in IEEE Transactions on Cloud Computing. This is the author's version which has not been fully edited and content may change prior to final publication. Citation information: DOI 10.1109/TCC.2026.3656828

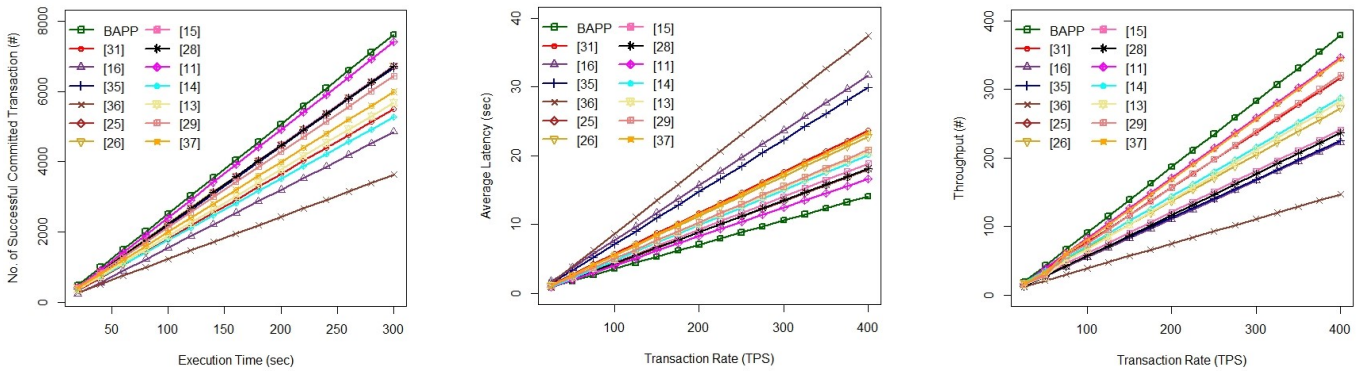

(a) Committed Transaction (b) Average Latency (c) Throughput

Fig. 7: Examining Execution Costs in a Private Blockchain.

required to make a transaction may increase while the number of peers and enterprises in the network grows or exhibits a significant difference in the course of the requested transaction building upon successful authentication of the communication process.

Fig.7b shows the average latency over the transaction rates of different enterprises with a discrete number of peers (i.e., patients, doctors, and clinics). To relate this metric to the development of a blockchain network, the BAPP framework, and the other schemes were concerned with the time period between starting login/payment transactions and obtaining successful confirmation. The average latency was quantified in its k-block deep to verify the y-axis (i.e. from 0 to 40 sec with an interval of 10 sec) and the x-axis (i.e., from 100 to 400 TPS with a period of 100 TPS). The graphical result shows that with two enterprises and two peers, the BAPP framework had a $14.11sec$ latency at a transaction rate of $400TPS$ while the other related schemes had the latencies of $23.71sec$ [31], $31.71sec$ [16], $29.93sec$ [35], $37.47sec$ [36], $17.99sec$ [25], $22.77sec$ [26], $18.87sec$ [15], and $18.13sec$ [28], $16.67sec$ [11], $20.13sec$ [14], $20.61sec$ [13], $20.87sec$ [29], and $23.33sec$ [37]. Moreover, the resulting graph concludes that latency may be confined to within a certain period of time for any number of enterprises and peers, whereas transaction rates increased to a specific extent.

The graph in Fig.7c shows throughput over transaction rates for different enterprises with a discrete number of peers (i.e., patients, doctors, and clinics). Throughput typically considers the total load a system can handle per unit of time expressed in TPS. The x-axis of the graph is the transaction rate (i.e., from 100 to 400 TPS with a period of 100 TPS), whereas the y-axis is the workload ranging from 0 to 400 with intervals of 100 to find the maximum workload of the medical enterprise system. It is apparent that with two enterprises and two peers, the proposed BAPP framework reaches its highest transaction rate of $\approx 94.75\%$ while the other schemes obtained transaction rates of 79.25% [31], 55.75% [16], 56.25% [35], 36.75% [36], 86.75% [25], 68.25% [26], and 60.25% [15], 59.25% [28], 86.75% [11], 72% [14], 70.75% [13], 80.25 [29], and 86.25% [37]. The graph also surmises that while examining the transaction rates from 100 to $400TPS$, the throughput of the proposed BAPP framework showed considerable changes in maintaining workload. It is also worth noting that throughput might reach saturation even if the transaction rates change a value for any other scenarios.

VII. Conclusion and Future Work

In this paper, we presented a blockchain-authorized privacy-preserving framework for the cloud-assisted IoMT. This framework exploits the features of edge computing and blockchain such as decentralization, hash encryption, and rapid service response time to offer fine-grained data sharing between M_{ot} and C_S. Since this paper is intended to improve the security level and transmission efficiency of computing devices, the proposed BAPP framework prefers to use elliptic-curve cryptography eliminating the usage of bilinear pairing and the Hash-Map function. Moreover, in the proposed BAPP framework, device authorization and distributed pseudonym parameters were applied to achieve message verification and proper session key computation. Under the assumption of an elliptic-curve discrete logarithm problem, we proved that the proposed BAPP framework is practically unforgeable against adaptive query attacks using a random oracle model. Additionally, we demonstrated that the proposed framework satisfies the design requirements of the cloud-assisted IoMT, including privacy and security properties to exhibit its key significance with an application interface i.e., eHealthcare for storage and network resources. The theoretical and simulation analysis revealed that the proposed BAPP framework outperformed related schemes in terms of transmission time, computation cost, communications, and verification to meet the service requirements of healthcare applications in the cloud.

In future work, we intend to design and develop seamless privacy preservation with a fully-distributed pseudonym mechanism to achieve effective data sharing with a proper incentive mechanism using blockchain. Also, we will construct an intelligent contract driven by artificial intelligence to maintain better device interactions and verification with a trust-based distributed database in ledger technology.

References

[1] M. Qi, J. Chen, and Y. Chen, "A secure authentication with key agreement scheme using ECC for satellite communication systems," *International Journal of Satellite Communications and Networking*, vol. 37, no. 3, pp. 234–244, DOI: 10.1002/sat.1279.

[2] A. Yousefpour, C. Fung, T. Nguyen, *et al.*, "All one needs to know about fog computing and related edge computing paradigms: A complete survey," *Journal of Systems Architecture*, vol. 98, pp. 289–330, DOI: 10.1016/j.sysarc.2019.02.009.

[3] A. Čolaković and M. Hadžialić, "Internet of things (IoT): A review of enabling technologies, challenges, and open research issues," *Computer Networks*, vol. 144, pp. 17–39, DOI: 10.1016/j.comnet.2018.07.017.

[4] P. Mundhenk, A. Paverd, A. Mrowca, *et al.*, "Security in automotive networks: Lightweight authentication and authorization," *ACM Transactions on Design Automation of Electronic Systems*, vol. 22, no. 2, pp. 1–27, DOI: 10.1145/2960407.

© 2026 IEEE. All rights reserved, including rights for text and data mining and training of artificial intelligence and similar technologies. Personal use is permitted, but republication/redistribution requires IEEE permission. See https://www.ieee.org/publications/rights/index.html for more information.

This article has been accepted for publication in IEEE Transactions on Cloud Computing. This is the author's version which has not been fully edited and content may change prior to final publication. Citation information: DOI 10.1109/TCC.2026.3656828

[5] Y. B. Zikria, H. Yu, M. K. Afzal, M. H. Rehmani, and O. Hahm, "Internet of things (IoT): Operating system, applications and protocols design, and validation techniques," *Future Generation Computer Systems*, vol. 88, pp. 699–706, DOI: 10.1016/j.future.2018.07.058.

[6] M. Dotan, Y.-A. Pignolet, S. Schmid, S. Tochner, and A. Zohar, "Survey on blockchain networking: Context, state-of-the-art, challenges," *ACM Computing Surveys*, vol. 54, no. 5, pp. 1–34, DOI: 10.1145/3453161.

[7] N. Mäkitalo, A. Ometov, J. Kannisto, S. Andreev, Y. Koucheryavy, and T. Mikkonen, "Safe, secure executions at the network edge: Coordinating cloud, edge, and fog computing," *IEEE Software*, vol. 35, no. 1, pp. 30–37, 2017.

[8] D. He, D. Wang, Q. Xie, and K. Chen, "Anonymous handover authentication protocol for mobile wireless networks with conditional privacy preservation," *Science China Information Sciences*, vol. 60, no. 5, p. 052 104, DOI: 10.1007/s11432-016-0161-2.

[9] B. D. Deebak, "Secure and efficient mutual adaptive user authentication scheme for heterogeneous wireless sensor networks using multimedia client–server systems," *Wireless Personal Communications*, vol. 87, no. 3, pp. 1013–1035, DOI: 10.1007/s11277-015-2621-x.

[10] X. He, X. Niu, Y. Wang, L. Xiong, Z. Jiang, and C. Gong, "A hierarchical blockchain-assisted conditional privacy-preserving authentication scheme for vehicular ad hoc networks," *Sensors*, vol. 22, no. 6, p. 2299, DOI: 10.3390/s22062299.

[11] Y. Zhang, B. Li, J. Wu, B. Liu, R. Chen, and J. Chang, "Efficient and Privacy-Preserving Blockchain-Based Multifactor Device Authentication Protocol for Cross-Domain IIoT," *IEEE Internet of Things Journal*, vol. 9, no. 22, pp. 22 501–22 515, Nov. 2022. DOI: 10.1109/JIOT.2022.3176192.

[12] B. Deebak and S. O. Hwang, "Intelligent drone-assisted robust lightweight multi-factor authentication for military zone surveillance in the 6g era," *Computer Networks*, vol. 225, p. 109 664, 2023.

[13] Z. Bao, D. He, M. K. Khan, M. Luo, and Q. Xie, "PBidm: Privacy-Preserving Blockchain-Based Identity Management System for Industrial Internet of Things," *IEEE Transactions on Industrial Informatics*, vol. 19, no. 2, pp. 1524–1534, Feb. 2023. DOI: 10.1109/TII.2022.3206798.

[14] J. Liu, L. Wang, and Y. Yu, "Improved Security of a Pairing-Free Certificateless Aggregate Signature in Healthcare Wireless Medical Sensor Networks," *IEEE Internet of Things Journal*, vol. 7, no. 6, pp. 5256–5266, Jun. 2020. DOI: 10.1109/JIOT.2020.2979613.

[15] Y. Ma and Q. Cheng, "An Anonymous and Certificateless Identity Authentication Protocol for Mobile Edge Computing," *IEEE Systems Journal*, pp. 1–12, 2023. DOI: 10.1109/JSYST.2023.3288272.

[16] D. S. Gupta, S. H. Islam, M. S. Obaidat, P. Vijayakumar, N. Kumar, and Y. Park, "A Provably Secure and Lightweight Identity-Based Two-Party Authenticated Key Agreement Protocol for IIoT Environments," *IEEE Systems Journal*, vol. 15, no. 2, pp. 1732–1741, Jun. 2021. DOI: 10.1109/JSYST.2020.3004551.

[17] S. Malani, J. Srinivas, A. K. Das, K. Srinathan, and M. Jo, "Certificate-based anonymous device access control scheme for iot environment," *IEEE Internet of Things Journal*, vol. 6, no. 6, pp. 9762–9773, 2019.

[18] Y. Zhang, Y. Xiang, W. Wu, and A. Alelaiwi, "A variant of password authenticated key exchange protocol," *Future Generation Computer Systems*, vol. 78, pp. 699–711, 2018.

[19] M. Wazid, A. K. Das, V. Bhat K, and A. V. Vasilakos, "LAM-CIoT: Lightweight authentication mechanism in cloud-based IoT environment," *Journal of Network and Computer Applications*, vol. 150, p. 102 496, DOI: 10.1016/j.jnca.2019.102496.

[20] Z. Qiao, Q. Yang, Y. Zhou, *et al.*, "An efficient certificate-based aggregate signature scheme with provable security for industrial internet of things," *IEEE Systems Journal*, vol. 17, no. 1, pp. 72–82, DOI: 10.1109/JSYST.2022.3188012.

[21] S. Wang, L. Ouyang, Y. Yuan, X. Ni, X. Han, and F.-Y. Wang, "Blockchain-enabled smart contracts: Architecture, applications, and future trends," *IEEE Transactions on Systems, Man, and Cybernetics: Systems*, vol. 49, no. 11, pp. 2266–2277, DOI: 10.1109/TSMC.2019.2895123.

[22] P. Kumar and L. Chouhan, "A secure authentication scheme for IoT application in smart home," *Peer-to-Peer Networking and Applications*, vol. 14, no. 1, pp. 420–438, DOI: 10.1007/s12083-020-00973-8.

[23] A. A.-N. Patwary, A. Fu, S. K. Battula, R. K. Naha, S. Garg, and A. Mahanti, "Fogauthchain: A secure location-based authentication scheme in fog computing environments using blockchain," *Computer Communications*, vol. 162, pp. 212–224, 2020.

[24] B. Wang, Z. Chang, S. Li, and T. Hämäläinen, "An efficient and privacy-preserving blockchain-based authentication scheme for low earth orbit satellite-assisted internet of things," *IEEE Transactions on Aerospace and Electronic Systems*, vol. 58, no. 6, pp. 5153–5164, 2022.

[25] F. Wang, J. Cui, Q. Zhang, D. He, C. Gu, and H. Zhong, "Blockchain-Based Lightweight Message Authentication for Edge-Assisted Cross-Domain Industrial Internet of Things," *IEEE Transactions on Dependable and Secure Computing*, pp. 1–18, 2023. DOI: 10.1109/TDSC.2023.3285800.

[26] Q. Tao, H. Ding, T. Jiang, and X. Cui, "B-DSPA: A Blockchain-based Dynamically Scalable Privacy-Preserving Authentication Scheme in Vehicular Ad-hoc Networks," *IEEE Internet of Things Journal*, pp. 1–1, 2023. DOI: 10.1109/JIOT.2023.3289057.

[27] S. Son, J. Lee, Y. Park, Y. Park, and A. K. Das, "Design of blockchain-based lightweight v2i handover authentication protocol for VANET," *IEEE Transactions on Network Science and Engineering*, vol. 9, no. 3, pp. 1346–1358, DOI: 10.1109/TNSE.2022.3142287.

[28] A. Vangala, A. K. Das, A. Mitra, S. K. Das, and Y. Park, "Blockchain-Enabled Authenticated Key Agreement Scheme for Mobile Vehicles-Assisted Precision Agricultural IoT Networks," *IEEE Transactions on Information Forensics and Security*, vol. 18, pp. 904–919, 2023. DOI: 10.1109/TIFS.2022.3231121.

[29] J. Zhang, Y. Jiang, J. Cui, D. He, I. Bolodurina, and H. Zhong, "DBCPA: Dual Blockchain-Assisted Conditional Privacy-Preserving Authentication Framework and Protocol for Vehicular Ad Hoc Networks," *IEEE Transactions on Mobile Computing*, pp. 1–15, 2022. DOI: 10.1109/TMC.2022.3230853.

[30] H. Chai, S. Leng, J. He, K. Zhang, and B. Cheng, "Cyberchain: Cybertwin empowered blockchain for lightweight and privacy-preserving authentication in internet of vehicles," *IEEE Transactions on Vehicular Technology*, vol. 71, no. 5, pp. 4620–4631, 2021.

[31] A. S. Rajasekaran, M. Azees, and K. Yahya, "FHAAPS: Efficient Anonymous Authentication with Privacy Preservation Scheme for Farm-to-Home Communication," en, *Security and Communication Networks*, vol. 2023, M. Shafiq, Ed., pp. 1–12, Feb. 2023. DOI: 10.1155/2023/1225675.

[32] F. Zhu, X. Yi, A. Abuadbba, I. Khalil, X. Huang, and F. Xu, "A security-enhanced certificateless conditional privacy-preserving authentication scheme for vehicular ad hoc networks," *IEEE Transactions on Intelligent Transportation Systems*, 2023.

[33] H. Zhong, L. Chen, J. Cui, J. Zhang, I. Bolodurina, and L. Liu, "Secure and lightweight conditional privacy-preserving authentication for fog-based vehicular ad hoc networks," *IEEE Internet of Things Journal*, vol. 9, no. 11, pp. 8485–8497, 2021.

[34] X. Xie, B. Wu, and B. Hou, "Bephap: A blockchain-based efficient privacy-preserving handover authentication protocol with key agreement for internet of vehicles," *Journal of Systems Architecture*, vol. 138, p. 102 869, 2023.

[35] Z. Gong, T. Gao, and N. Guo, "PCAS: Cryptanalysis and improvement of pairing-free certificateless aggregate signature scheme with conditional privacy-preserving for VANETs," en, *Ad Hoc Networks*, vol. 144, p. 103 134, May 2023. DOI: 10.1016/j.adhoc.2023.103134.

[36] S. Liu, Y. Chai, L. Hui, and W. Wu, "Blockchain-Based Anonymous Authentication in Edge Computing Environment," *Electronics*, vol. 12, no. 1, p. 219, Jan. 2023. DOI: 10.3390/electronics12010219.

[37] H. Zhong, C. Zhang, J. Cui, Y. Xu, and L. Liu, "Authentication and Key Agreement Based on Anonymous Identity for Peer-to-Peer Cloud," *IEEE Transactions on Cloud Computing*, vol. 10, no. 3, pp. 1592–1603, Jul. 2022. DOI: 10.1109/TCC.2020.3004334.

[38] S. S. Ahamad, M. Al-Shehri, and I. Keshta, "A secure and resilient scheme for telecare medical information systems with threat modeling and formal verification," *IEEE Access*, vol. 10, pp. 120 227–120 244, 2022.

[39] S. H. Pasha, D. Mehrotra, J. C.-W. Lin, and G. Srivastava, "Gstchain: A blockchain network application for the goods and services tax," *Journal of Circuits, Systems and Computers*, vol. 31, no. 01, p. 2 250 002, 2022.

[40] B. Deebak and S. O. Hwang, "Healthcare applications using blockchain with a cloud-assisted decentralized privacy-preserving framework," *IEEE Transactions on Mobile Computing*, 2023.

B D Deebak received his Ph.D. degree in computer science from SASTRA Deemed University, Thanjavur, India, in 2016. He is currently a Brain Pool Fellow with the Department of Computer Engineering, Department Computer Engineering, Gachon University, Seongnam 13120, Korea. He is an Active Member of professional societies like IE (I), CSI, and ISTE. His research interests include multimedia networks, network security, the Internet of Things, and machine learning.

SEONG OUN HWANG (Senior Member, IEEE) received his Ph.D. degree in computer science from the Korea Advanced Institute of Science and Technology, in 2004, South Korea. He is currently a Full Professor at the Department of Computer Engineering, Gachon University, Seongnam 13120, South Korea. His research interests include cryptography, cybersecurity, data-centric artificial intelligence, and artificial intelligence.

© 2026 IEEE. All rights reserved, including rights for text and data mining and training of artificial intelligence and similar technologies. Personal use is permitted, but republication/redistribution requires IEEE permission. See https://www.ieee.org/publications/rights/index.html for more information.