MT2523 Series Reference Manual

Version: 1.1

Release date: 14 December 2016

© 2015 - 2017 MediaTek Inc.

This document contains information that is proprietary to MediaTek Inc. ("MediaTek") and/or its licensor(s). MediaTek cannot grant you permission for any material that is owned by third parties. You may only use or reproduce this document if you have agreed to and been bound by the applicable license agreement with MediaTek ("License Agreement") and been granted explicit permission within the License Agreement ("Permitted User"). If you are not a Permitted User, please cease any access or use of this document immediately. Any unauthorized use, reproduction or disclosure of this document in whole or in part is strictly prohibited. THIS DOCUMENT IS PROVIDED ON AN "AS-IS" BASIS ONLY. MEDIATEK EXPRESSLY DISCLAIMS ANY AND ALL WARRANTIES OF ANY KIND AND SHALL IN NO EVENT BE LIABLE FOR ANY CLAIMS RELATING TO OR ARISING OUT OF THIS DOCUMENT OR ANY USE OR INABILITY TO USE THEREOF. Specifications contained herein are subject to change without notice.

Document Revision History

Revision	Date	Description
0.1	11 December 2015	Initial draft.
0.2	22 February 2016	Review completed.
0.3	23 June 2016	Update G2D, AFE, MMSYS.
1.0	31 Auguest 2016	Update MMSYS.
1.1	14 December 2016	Add PMU.

© 2015 - 2017 MediaTek Inc.

This document contains information that is proprietary to MediaTek Inc. (“MediaTek”) and/or its licensor(s).
Any unauthorized use, reproduction or disclosure of this document in whole or in part is strictly prohibited.

Table of contents

1. Documentation General Conventions 1

1.1. Abbreviations for Control Modules 1
1.2. Abbreviations for Registers 2

2. Bus Architecture and Memory Map 3

3. External Interrupt Controller 8

3.1. General Description 8
3.2. Register Definition 10

4. Direct Memory Access 20

4.1. General Description 20
4.2. Register Definition 24

5. Real Time Clock 44

5.1. General Description 44
5.2. Register Definitions 44

6. Universal Asynchronous Receiver Transmitter 56

6.1. General Description 56
6.2. Register Definition 60

7. Serial Peripheral Interface Master Controller 75

7.1. General Description 75
7.2. Register Definition 78

8. Serial Peripheral Interface Slave Controller 85

8.1. General Description 85
8.2. Register Definition 89

9. Inter-Integrated Circuit Controller 97

9.1. General Description 97
9.2. Register Definition 100

10. SD Memory Card Controller 110

10.1. General Description 110
10.2. Register Definition 112

11. USB2.0 High-Speed Device Controller 142

11.1. General Description 142
11.2. Register Definition 145

12. General Purpose Timer 210

12.1. Introduction 210
12.2. Register Definition 212

13. Pulse Width Modulation 233

13.1. General Description 233
13.2. Register Definition 234

14. Keypad Scanner 236

14.1. General Description 236
14.2. Register Definition 242

15. General Purpose Counter 246

15.1. General Description 246
15.2. Register Definition 247

© 2015 - 2017 MediaTek Inc.

This document contains information that is proprietary to MediaTek Inc. (“MediaTek”) and/or its licensor(s).
Any unauthorized use, reproduction or disclosure of this document in whole or in part is strictly prohibited.

16. Auxiliary ADC Unit 251
16.1. General Description 251
16.2. Register Definition 252
16.3. Programming Guide 256
17. General Purpose DAC 257
17.1. General Description 257
17.2. Register Definition 257
17.3. Programming Guide 259
17.4. Limitations and Important Notes 260
18. Accessory Detector 261
18.1. General Description 261
18.2. Register Definition 263
19. True Random Number Generator 273
19.1. General Description 273
19.2. Register Definition 275
19.3. Programming Guide 278
20. Audio Front End 279
20.1. General Description 279
20.2. Register Definition 281
21. 2D Acceleration 303
21.1. General Description 303
21.2. Features 304
21.3. Application Notes 309
21.4. Register Definitions 311
22. Multimedia Subsystem Configuration 324
22.1. Introduction 324
22.2. Block diagram 324
22.3. Register definition 325
23. LCD display 330
23.1. General Description 330
23.2. LCD registers definition 336
24. Display Serial Interface (DSI) 381
24.1. General Description 381
24.2. Features 381
24.3. Register Definition 382
25. Camera Interface 397
25.1. General Description 397
25.2. Application Notes 397
25.3. Register Definitions 397
26. Serial Camera (SCAM) 409
26.1. General Description 409
26.2. Application Notes 410
26.3. Register Definition 411
27. Image Resizer 418
27.1. General Description 418
27.2. Application Notes 418
27.3. Register Definition 420
28. Image Rotator DMA 434

© 2015 - 2017 MediaTek Inc.

This document contains information that is proprietary to MediaTek Inc. (“MediaTek”) and/or its licensor(s).
Any unauthorized use, reproduction or disclosure of this document in whole or in part is strictly prohibited.

28.1. General Description 434
28.2. Register Definition 436

29. General Purpose Inputs/Outputs 444

29.1. General Description 444
29.2. IO Pull Up/Down Control Truth Table 444
29.3. Register Definition 447

30. MT2523 Top Clock Setting 588

30.1. MT2523 Clock Scheme 588
30.2. Clock Setting Programming Guide 589

31. Power Management Unit 606

31.1. Power supply schemes 607
31.2. Voltage regulator 608
31.3. Low power mode 610
31.4. Pulse Charger (PCHR) 610
31.5. Power On/Off sequence 613
31.6. LED current sink (ISINK) 615
31.7. Vibrator driver 616
31.8. PMU AUXADC 616

© 2015 - 2017 MediaTek Inc.

This document contains information that is proprietary to MediaTek Inc. (“MediaTek”) and/or its licensor(s).
Any unauthorized use, reproduction or disclosure of this document in whole or in part is strictly prohibited.

Lists of tables and figures

Table 2-1. MT2523 bus connection....3
Table 2-2. Top view memory map....3
Table 2-3. Always-on domain peripherals....4
Table 2-4. Power-down domain peripherals....5
Table 3-1. External interrupt sources....9
Table 4-1. Virtual FIFO access ports....23
Table 7-1. SPI master controller interface....76
Table 8-1. SPI slave controller interface....85
Table 8-2. SPI slave command description....87
Table 8-3. SPI slave status description (use RS command to poll SPI slave status)....87
Table 10-1. Sharing of pins for SD memory card controller....111
Table 12-1. Operation mode of GPT....210
Table 12-2. Timer feature....210
Table 14-1. 3*3 single key's order number in COL/ROW matrix....236
Table 14-2. 3*3 double key's order number in COL/ROW matrix....236
Table 16-1. AUXADC channel description....252
Table 21-1. The 2D engine register mapping....311
Table 23-1. LCD controller internal state....332
Table 23-2. LCD TE Ports....348
Table 23-3. WROICON.FORMAT List....352
Table 23-4. Layer address alignment constraint....365
Table 28-1. ImageRotator DMA Output Format....434
Table 28-2. Base Address and Buffer Size Restrictions....435
Table 29-1. GPIO v.s. IO type mapping....444
Table 31-1. LDO input power plan....607
Table 31-2. LDO types and brief specifications....609
Table 31-3. Application and input range of ADC channels....616

Figure 3-1. Block diagram of external interrupt controller....8
Figure 4-1. Variety data paths of DMA transfers....20
Figure 4-2. DMA block diagram....20
Figure 4-3. Ring buffer and double buffer memory data movement....21
Figure 4-4. Unaligned word accesses....22
Figure 4-5. Virtual FIFO DMA....22
Figure 6-1. Block Diagram of UART....57
Figure 7-1. Pin connection between SPI master and SPI slave....75
Figure 7-2. SPI transmission formats....75
Figure 7-3. Operation flow with or without PAUSE mode....77
Figure 7-4. CS_N de-assert mode....77
Figure 7-5. Block diagram of SPI master controller....77

© 2015 - 2017 MediaTek Inc.

This document contains information that is proprietary to MediaTek Inc. ("MediaTek") and/or its licensor(s).
Any unauthorized use, reproduction or disclosure of this document in whole or in part is strictly prohibited.

Figure 8-1. Pin connection between SPI master and SPI slave 85
Figure 8-2. SPI transmission formats 85
Figure 8-3. SPI slave controller commands waveform 86
Figure 8-4. SPI slave control flow diagram 86
Figure 8-5. Config read/write (CR/CW) command format 88
Figure 8-6. Block diagram of SPI slave controller 89
Figure 10-1. Card detection for SD memory card 111
Figure 10-2. IO Pinmux setting for MSDC 112
Figure 11-1. Multiple packet RX flow (known size) 143
Figure 11-2. Multiple packet RX flow (unknown size) 144
Figure 11-3. Block diagram 145
Figure 12-1. Block diagram of GPT 211
Figure 13-1. PWM waveform 233
Figure 13-2. PWM waveform with register values 233
Figure 14-1. 3x3 keypad matrix (9 keys) 237
Figure 14-2. 3x3 keypad matrix (18 keys) 237
Figure 14-3. One key pressed with de-bounce mechanism denoted 238
Figure 14-4. (a) Two keys pressed, case 1; (b) Two keys pressed, case 2 238
Figure 14-5. Single keypad detection method 239
Figure 14-6. Brief schematic diagram of double keypad 240
Figure 14-7. Single key case 240
Figure 14-8. Row scan 241
Figure 14-9. Column scan 241
Figure 16-1. AUXADC architecture 251
Figure 18-1. Suggested accessory detection circuit 261
Figure 18-2. State machine between microphone and hook-switch plug-in/out change 262
Figure 18-3. PWM waveform 262
Figure 18-4. PWM waveform with register value present 265
Figure 18-5. PWM waveform with DEBOUNCE register value present 267
Figure 19-1. TRNG architecture 273
Figure 19-2. H-FIRO architecture 274
Figure 19-3. H-RO and H-GARO architecture 274
Figure 19-4. TRNG operation flow 275
Figure 20-1. Block diagram of digital circuits of the audio front-end 279
Figure 20-2. Timing diagram of Bluetooth application 280
Figure 20-3. Timing diagram of different clock rate Bluetooth application 280
Figure 20-4. EDI Format 1: EIAJ (FMT = 0) 281
Figure 20-5. EDI Format 1: I2S (FMT = 1) 281
Figure 21-1. 2D Engine Block Diagram 303
Figure 21-2. 2D Engine Coordinates 304
Figure 21-3. 2D Engine Clipping Operation 305
Figure 21-4. Font Drawing Setting 306
Figure 21-5. Anti-aliasing Font Diagram 307
Figure 21-6. Anti-aliasing Font Example 308

© 2015 - 2017 MediaTek Inc.

This document contains information that is proprietary to MediaTek Inc. (“MediaTek”) and/or its licensor(s).
Any unauthorized use, reproduction or disclosure of this document in whole or in part is strictly prohibited.

Figure 21-7. Rectangle Fill with Alpha-Blending Example 308
Figure 21-8. The block diagram of graphic 2D driver interface....309
Figure 21-9. DIS_BG example....315
Figure 21-10. Color Replacement Stage....318
Figure 21-11. ROI Memory Offset 319
Figure 21-12. Image of Different Rotation Angles 321
Figure 22-1. Multimedia Subsystem Block Diagram 324
Figure 23-1. LCD Block Diagram 331
Figure 23-2. Two kinds of usages of overlay& PQ can be configured by different settings....331
Figure 23-3. LCD State Transitions 332
Figure 23-4. LCD serial interface read timing diagram....343
Figure 23-5. LCD serial interface read waveform example 344
Figure 23-6. LCD serial interface write timing diagram....344
Figure 23-7. LCD serial interface write waveform example 345
Figure 23-8. SYNC_MODE = 0....346
Figure 23-9. LCM Scan Line Timing 346
Figure 23-10. TE Scan Line Example....347
Figure 23-11. Layers and ROI setting 357
Figure 23-12. ROI write to memory setting 358
Figure 23-13. Layer source RGB format 360
Figure 23-14. YUYV422 byte order in memory 360
Figure 24-1. Pixel Format of RGB888 381
Figure 24-2. Pixel Format of Loosely RGB666 382
Figure 24-3. Pixel Format of RGB565 382
Figure 25-1. Serial Sensor Block Diagram....397
Figure 25-2. Capture Mod Interrupt Condition Chart. 402
Figure 25-3. Preview Mode Interrupt Conndition Chart....403
Figure 26-1. SCAM Block Diagram....409
Figure 26-2. Serial Interface Mode. SCAM Output Waveform Example 409
Figure 27-1. Image Resizer Overview....418
Figure 27-2. Resizer double buffered registers updating and taking effect timing chart 419
Figure 27-3. Resizer interrupt and busy asserting timing chart 419
Figure 27-4. Memory clipping chart....431
Figure 28-1. Image Rotator DMA Input Interface 434
Figure 28-2. Image Rotator DMA Architecture 434
Figure 28-3. Image Rotator DMA Descriptor Format....435
Figure 29-1. GPIO block diagram 444
Figure 30-1. MT2523 clock scheme 589
Figure 31-1. MT2523 series PMU architecture 606
Figure 31-2. MT2523 series power domain 608
Figure 31-3. General LDO block diagram 609
Figure 31-4. PCHR schematics....611
Figure 31-5. Charging control modes....612
Figure 31-6. Power-on/off control sequence by pressing PWRKEY 614

© 2015 - 2017 MediaTek Inc.

This document contains information that is proprietary to MediaTek Inc. (“MediaTek”) and/or its licensor(s).
Any unauthorized use, reproduction or disclosure of this document in whole or in part is strictly prohibited.

Figure 31-7. Power-on/off control sequence by charger plug in 614
Figure 31-8. ISINK block diagram 616

© 2015 - 2017 MediaTek Inc.

This document contains information that is proprietary to MediaTek Inc. ("MediaTek") and/or its licensor(s).
Any unauthorized use, reproduction or disclosure of this document in whole or in part is strictly prohibited.

1. Documentation General Conventions

1.1. Abbreviations for Control Modules

Abbreviation	Full name
EINT	External interrupt controller
DMA	Direct memory access
UART	Universal asynchronous receiver transmitter
SPI master	Serial peripheral interface master controller
SPI slave	Serial peripheral interface slave controller
I2C	Inter-integrated circuit interface
MSDC	SD memory card controller
USB	USB 2.0 high-speed device controller
GPT	General purpose timer
PWM	Pulse width modulation
KP Scanner	Keypad scanner
GPCount	General purpose counter
AUXADC	Auxiliary ADC
GPDAC	General purpose DAC
Accdet	Accessory detector
TRNG	True random Number Generator
GPIO	General purpose inputs-outputs
PMU	Power management unit

© 2015 - 2017 MediaTek Inc.

This document contains information that is proprietary to MediaTek Inc. (“MediaTek”) and/or its licensor(s).
Any unauthorized use, reproduction or disclosure of this document in whole or in part is strictly prohibited.

1.2. Abbreviations for Registers

Abbreviation	Full name
RW	Read and write
RO	Read only
WO	Write only
RC	Read 1 to clear
WC	Write 1 to clear
RWC	Read or write 1 to clear
FM	Frequency measurement
FRC	Free running counter

© 2015 - 2017 MediaTek Inc.

This document contains information that is proprietary to MediaTek Inc. (“MediaTek”) and/or its licensor(s).
Any unauthorized use, reproduction or disclosure of this document in whole or in part is strictly prohibited.

2. Bus Architecture and Memory Map

To better support various IOT applications, MT2523 adopts 32-bit multi-AHB matrix to provide low-power, fast and flexible data operation. Table 2-1 shows the interconnections between bus masters (CM4, four SPI masters, SPI slave, debug system, Multimedia (MM) system, USB, and three DMAs) and slaves (AO APB peripherals, PD APB peripherals, TCM, SFC, EMI, MDSYS, BTSYS).

Table 2-1. MT2523 bus connection

Slave \ Master	ARM CM4	AO DMA	PD DMA	Sensor DMA	USB	MM SYS	Debug SYS	SPI Master	SPI Slave
AO APB Peripherals	•	•							
PD APB Peripherals	•		•	•				•	•
TCM	•	•	•	•		•		•	•
EMI	•	•	•	•	•	•	•	•	•
SFC	•	•	•	•				•	•
Audio DSP	•		•	•				•	•
BTSYS	•		•	•				•	•

Table 2-2. Top view memory map

Start Address	End Address	Corresponding Module	Comment
0x0000_0000	0x03FF_FFFF	EMI	
0x0400_0000	0x0400_7FFF	CM4 TCM/cache	
0x0400_8000	0x0402_7FFF	CM4 TCM	
0x0410_0000	0x041F_FFFF	Boot ROM	
0x0800_0000	0x0BFF_FFFF	SFC	
0x8000_0000	0x8000_FFFF	Version code	
0x8200_0000	0x83FF_FFFF	MDSYS	
0xA000_0000	0xA03F_FFFF	PD APB peripherals	

© 2015 - 2017 MediaTek Inc.

This document contains information that is proprietary to MediaTek Inc. (“MediaTek”) and/or its licensor(s).
Any unauthorized use, reproduction or disclosure of this document in whole or in part is strictly prohibited.

Start Address	End Address	Corresponding Module	Comment
0xA040_0000	0xA04F_FFFF	MMSYS	
0xA080_0000	0xA08F_FFFF	CM4 peripheral	
0xA090_0000	0xA09F_FFFF	PD AHB peripherals	
0xA200_0000	0xA21F_FFFF	AO APB peripherals	
0xA290_0000	0xA29F_FFFF	AO AHB peripherals	
0xA300_0000	0xA3FF_FFFF	BTSYS	
0xE000_0000	0xE003_FFFF	CM4 private peripheral bus - internal	
0xE004_0000	0xE00F_FFFF	CM4 private peripheral bus - external	

Table 2-3. Always-on domain peripherals

Start Address	Module Description	Bus Interface	Comments
A200_0000	VERSION_CTRL	APB	Mapped to 0x8000_0000
A201_0000	Configuration registers	APB	Clock, power down, version and reset
A202_0000	General purpose inputs/outputs	APB	
A203_0000	Interrupt controller (eint+cirq)	APB	
A204_0000	Analog chip interface controller	APB	PLL, CLKSQ, FH, CLKSW and SIMLS
A205_0000	Reset generation unit	APB	
A206_0000	EFUSE	APB	
A207_0000	AO DMA controller	APB	
A208_0000	INFRA BUS configuration	APB	
A209_0000	MIPI_TX_CONFIG	APB	
A20A_0000	Configuration Registers	APB	Clock, 104M
A20B_0000	SEJ	APB	
A20C_0000	PSI_MST	APB	
A20D_0000	Keypad Scanner	APB	
A20E_0000	BTIF	APB	

© 2015 - 2017 MediaTek Inc.

This document contains information that is proprietary to MediaTek Inc. (“MediaTek”) and/or its licensor(s).
Any unauthorized use, reproduction or disclosure of this document in whole or in part is strictly prohibited.

Start Address	Module Description	Bus Interface	Comments
A20F_0000	MCU_TOPSM	APB	
A210_0000	CM4_TOPSM	APB	
A211_0000	CM4_CFG_PRIVATE	APB	
A213_0000	GP Counter	APB	
A214_0000	GP Timer	APB	
A215_0000	I2C_D2D	APB	
A216_0000	Pulse width modulation outputs 0	APB	
A217_0000	Pulse width modulation outputs 1	APB	
A218_0000	Display pulse width modulation	APB	
A219_0000	Reserved	APB	
A21A_0000	PMU mixedsys	APB	
A21B_0000	General purpose DAC	APB	
A21C_0000	Analog baseband (ABB) controller	APB	
A21D_0000	A-Die configuration registers	APB	Clock, reset, etc.
A21E_0000	Real-time clock	APB	
A21F_0000	ACCDET	APB	
A292_0000	AO DMA controller	AHB	AHB slave port of AO DMA

Table 2-4. Power-down domain peripherals

Start Address	Module Description	Bus Interface	Comments
A000_0000	DMA controller	APB	
A001_0000	TRNG	APB	
A002_0000	MS/SD controller 0	APB	
A003_0000	MS/SD controller 1	APB	
A004_0000	Serial flash	APB	
A005_0000	External memory interface	APB	

© 2015 - 2017 MediaTek Inc.

This document contains information that is proprietary to MediaTek Inc. (“MediaTek”) and/or its licensor(s).
Any unauthorized use, reproduction or disclosure of this document in whole or in part is strictly prohibited.

Start Address	Module Description	Bus Interface	Comments
A006_0000	DebugSYS APB 0	APB	
A007_0000	DebugSYS APB 1	APB	
A008_0000	DebugSYS APB 2	APB	
A009_0000	DebugSYS APB 3	APB	
A00A_0000	DebugSYS APB 4	APB	
A00B_0000	DebugSYS APB 5	APB	
A00C_0000	DebugSYS APB 6	APB	
A00D_0000	UART 0	APB	
A00E_0000	UART 1	APB	
A00F_0000	UART 2	APB	
A010_0000	UART 3	APB	
A011_0000	SPI_MASTER 0	APB	
A012_0000	SPI_MASTER 1	APB	
A013_0000	SPI_MASTER 2	APB	
A014_0000	SPI_MASTER 3	APB	
A015_0000	SPI_SLAVE	APB	
A016_0000	Pulse width modulation outputs 2	APB	
A017_0000	Pulse width modulation outputs 3	APB	
A018_0000	Pulse width modulation outputs 4	APB	
A019_0000	Pulse width modulation outputs 5	APB	
A01A_0000	Reserved	APB	
A01B_0000	I2C_2	APB	
A01C_0000	INFRA MBIST configuration	APB	
A01D_0000	Reserved	APB	
A01E_0000	Reserved	APB	
A01F_0000	Sensor memory	APB	
A020_0000	Reserved	APB	

© 2015 - 2017 MediaTek Inc.

This document contains information that is proprietary to MediaTek Inc. (“MediaTek”) and/or its licensor(s).
Any unauthorized use, reproduction or disclosure of this document in whole or in part is strictly prohibited.

Start Address	Module Description	Bus Interface	Comments
A021_0000	I2C_0	APB	
A022_0000	I2C_1_18V	APB	
A023_0000	Sensor DMA controller	APB	
A024_0000	Auxiliary ADC Unit	APB	
A090_0000	USB	AHB	
A091_0000	USB SIFSLV	AHB	
A090_0001	PD DMA	AHB	

© 2015 - 2017 MediaTek Inc.

This document contains information that is proprietary to MediaTek Inc. (“MediaTek”) and/or its licensor(s).
Any unauthorized use, reproduction or disclosure of this document in whole or in part is strictly prohibited.

3. External Interrupt Controller

3.1. General Description

External interrupt controller supports some interrupt requests coming from external sources and peripherals. All external interrupts, including external and peripherals sources, have the ability to inform the system to resume the system clock.

The external interrupts can be used for different types of applications, mainly for event detections: detection of hand free connection, hood opening and battery charger connection.

Since the external event may be unstable in a certain period, a de-bounce mechanism is introduced to ensure the functionality. The circuitry is mainly used to verify that the input signal remains stable for a programmable number of periods of the clock. When this condition is satisfied, for the appearance or the disappearance of the input, the output of the de-bounce logic will change to the desired state. *Note that because it uses the 32,768Hz slow clock to perform the de-bounce process, the parameter of the de-bounce period and de-bounce enable takes effect no sooner than one 32,768Hz clock cycle (~30.52us) after the software program sets them up.* When the sources of external interrupt controller are used to resume the system clock in sleep mode, the de-bounce mechanism must be enabled. However, the polarities of EINTs are clocked with the system clock, and therefore any change to them takes effect immediately. Figure 3-1 is the block diagram of external interrupt controller. Table 3-1 illustrates the external interrupt sources and related configuration of GPIO mode.

Note that the corresponding GPIO as external interrupt source should be in the input mode and is affected by GPIO data input inversion registers (GPIO_DINV). Refer to the GPIO section for more details.

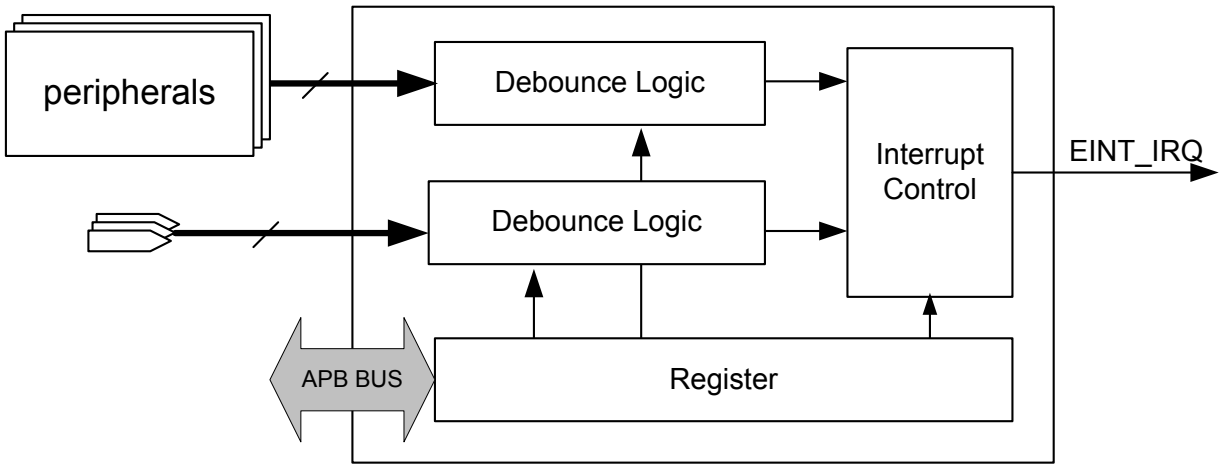

Figure 3-1. Block diagram of external interrupt controller

© 2015 - 2017 MediaTek Inc.

This document contains information that is proprietary to MediaTek Inc. (“MediaTek”) and/or its licensor(s).
Any unauthorized use, reproduction or disclosure of this document in whole or in part is strictly prohibited.

Table 3-1. External interrupt sources

EINT	Source pin	EINT	Source pin
EINT0	AUXIN0 if (GPIO0_MODE==1)	EINT16	URXD0 if (GPIO16_MODE==3)
EINT1	AUXIN1 if (GPIO1_MODE==1)	EINT17	UTXD0 if (GPIO17_MODE==3)
EINT2	AUXIN2 if (GPIO2_MODE==1)	EINT18	GPIO_B1 if (GPIO19_MODE==2)
EINT3	GPIO_A04 if (GPIO4_MODE==1), otherwise MCDA3 if (GPIO35_MODE==2)	EINT19	GPIO_B5 if (GPIO23_MODE==2)
EINT4	GPIO_A1 if (GPIO5_MODE==1), otherwise LSCE_B if (GPIO39_MODE==2)	EINT20	keypad (KCOL0~4)
EINT5	GPIO_A2 if (GPIO6_MODE==1), otherwise LSDA if (GPIO41_MODE==2)	EINT21	uart0_rxd
EINT6	GPIO_A3 if (GPIO7_MODE==1), otherwise LPTE if (GPIO43_MODE==2)	EINT22	uart1_rxd
EINT7	GPIO_A4 if (GPIO8_MODE==1)	EINT23	uart2_rxd
EINT8	GPIO_A5 if (GPIO9_MODE==1)	EINT24	uart3_rxd
EINT9	GPIO_C0 if (GPIO11_MODE==1), otherwise CMRST if (GPIO24_MODE==4)	EINT25	bt_eint_b
EINT10	GPIO_C1 if (GPIO12_MODE==1), otherwise CMCSK if (GPIO29_MODE==5)	EINT26	btif_sleep_wakeup_in_b
EINT11	GPIO_C2 if (GPIO13_MODE==1), otherwise MCCK if (GPIO30_MODE==2)	EINT27	pdn_usb11
EINT12	GPIO_C3 if (GPIO14_MODE==1), otherwise MCCM0 if (GPIO31_MODE==2)	EINT28	accdet_irq_b
EINT13	GPIO_C4 if (GPIO15_MODE==1), otherwise MCDA0 if (GPIO32_MODE==2)	EINT29	rtc_event_b
EINT14	AUXIN3 if (GPIO3_MODE==1), otherwise MCDA1 if (GPIO33_MODE==2)	EINT30	pmic_irq_b
EINT15	AUXIN4 if (GPIO10_MODE==1), otherwise MCDA2 if (GPIO34_MODE==2)	EINT31	gpcounter_irq_b

© 2015 - 2017 MediaTek Inc.

This document contains information that is proprietary to MediaTek Inc. (“MediaTek”) and/or its licensor(s).
Any unauthorized use, reproduction or disclosure of this document in whole or in part is strictly prohibited.

3.2. Register Definition

Module name: EINT Base address: (+A2030000h)

Address	Name	Width	Register Function
A2030300	EINT_STA	32	EINT interrupt status register
A2030308	EINT_INTACK	32	EINT interrupt acknowledge register
A2030310	EINT_EEVT	32	EINT wakeup event_b status register
A2030320	EINT_MASK	32	EINT interrupt mask register
A2030328	EINT_MASK_SET	32	EINT interrupt mask set register
A2030330	EINT_MASK_CLR	32	EINT interrupt mask clear register
A2030340	EINT_WAKEUP_MASK	32	EINT wakeup event mask register
A2030348	EINT_WAKEUP_MASK_SET	32	EINT wakeup event mask set register
A2030350	EINT_WAKEUP_MASK_CLR	32	EINT wakeup event mask clear register
A2030360	EINT_SENS	32	EINT sensitivity register
A2030368	EINT_SENS_SET	32	EINT sensitivity set register
A2030370	EINT_SENS_CLR	32	EINT sensitivity clear register
A2030380	EINT_DUALEDGE_SENS	32	EINT dual edge sensitivity register
A2030388	EINT_DUALEDGE_SENS_SET	32	EINT dual edge sensitivity set register
A2030390	EINT_DUALEDGE_SENS_CLR	32	EINT dual edge sensitivity clear register
A20303a0	EINT_SOFT	32	EINT software interrupt register
A20303a8	EINT_SOFT_SET	32	EINT software interrupt soft register
A20303b0	EINT_SOFT_CLR	32	EINT software interrupt clear register
A20303c0	EINT_D0EN	32	EINT domain 0 enable register
A2030400 ~ A203047C	EINTi_CON (i=0~31)	32	EINTi config register

A2030300 EINT_STA EINT interrupt status register 00000000

Bit	31	30	29	28	27	26	25	24	23	22	21	20	19	18	17	16
Name	EINT_STA[31:16]															
Type	RO															
Reset	0	0	0	0	0	0	0	0	0	0	0	0	0	0	0	0
Bit	15	14	13	12	11	10	9	8	7	6	5	4	3	2	1	0
Name	EINT_STA[15:0]															
Type	RO															
Reset	0	0	0	0	0	0	0	0	0	0	0	0	0	0	0	0

© 2015 - 2017 MediaTek Inc.

This document contains information that is proprietary to MediaTek Inc. ("MediaTek") and/or its licensor(s).
Any unauthorized use, reproduction or disclosure of this document in whole or in part is strictly prohibited.

Overview

Bit(s)	Mnemonic	Name	Description
31:0		EINT_STA	**External interrupt status** This register keeps up with the current status of which EINT source generates the interrupt request. If the EINT sources are set to edge sensitivity, EINT_IRQ will be de-asserted when the corresponding EINT_INTACK is programmed by 1. EINT_STA[i] for EINTi. 0: No external interrupt request is generated. 1: External Interrupt request is pending.

A2030308 EINT_INTACK EINT interrupt acknowledge register 00000000

Bit	31	30	29	28	27	26	25	24	23	22	21	20	19	18	17	16
Name	EINT_INTACK[31:16]															
Type	WO															
Reset	0	0	0	0	0	0	0	0	0	0	0	0	0	0	0	0
Bit	15	14	13	12	11	10	9	8	7	6	5	4	3	2	1	0
Name	EINT_INTACK[15:0]															
Type	WO															
Reset	0	0	0	0	0	0	0	0	0	0	0	0	0	0	0	0

Overview

Bit(s)	Mnemonic	Name	Description
31:0		EINT_INTACK	**Interrupt acknowledgement** Writing "1" to the specific bit position to acknowledge the interrupt request corresponding to the external interrupt line source. EINT_INTACK[i] for EINTi. 0: No effect 1: Interrupt request is acknowledged.

A2030310 EINT_EEVT EINT wakeup event_b status register 00000000

Bit	31	30	29	28	27	26	25	24	23	22	21	20	19	18	17	16
Name																
Type																
Reset																
Bit	15	14	13	12	11	10	9	8	7	6	5	4	3	2	1	0
Name																EEB
Type																RO
Reset																0

Overview

Bit(s)	Mnemonic	Name	Description
0		EEB	**EINT wake up event_b** This register is a debugging port to monitor internal signals. It is async signal. 0: EINT wakes up sleep mode. 1: EINT does not wake up sleep mode.

© 2015 - 2017 MediaTek Inc.

This document contains information that is proprietary to MediaTek Inc. ("MediaTek") and/or its licensor(s).
Any unauthorized use, reproduction or disclosure of this document in whole or in part is strictly prohibited.

A2030320 EINT_MASK EINT interrupt mask register FFFFFFFF

Bit	31	30	29	28	27	26	25	24	23	22	21	20	19	18	17	16
Name	EINT_MASK[31:16]															
Type	RO															
Reset	1	1	1	1	1	1	1	1	1	1	1	1	1	1	1	1
Bit	15	14	13	12	11	10	9	8	7	6	5	4	3	2	1	0
Name	EINT_MASK[15:0]															
Type	RO															
Reset	1	1	1	1	1	1	1	1	1	1	1	1	1	1	1	1

Overview

Bit(s)	Mnemonic	Name	Description
31:0		EINT_MASK	**Interrupt mask** This register controls whether or not the EINT source is allowed to generate an interrupt request. Setting a specific bit position to "1" will prevent the external interrupt line from becoming active. EINT_MASK[i] for EINTi. 0: Interrupt request is enabled. 1: Interrupt request is disabled.

A2030328 EINT_MASK_SET EINT interrupt mask set register 00000000

Bit	31	30	29	28	27	26	25	24	23	22	21	20	19	18	17	16
Name	EINT_MASK[31:16]															
Type	WO															
Reset	0	0	0	0	0	0	0	0	0	0	0	0	0	0	0	0
Bit	15	14	13	12	11	10	9	8	7	6	5	4	3	2	1	0
Name	EINT_MASK[15:0]															
Type	WO															
Reset	0	0	0	0	0	0	0	0	0	0	0	0	0	0	0	0

Overview

Bit(s)	Mnemonic	Name	Description
31:0		EINT_MASK	**Enables mask for the associated external interrupt source** This register is used to set up individual mask bits. Only the bits set to 1 are effective; also set EINT_MASK bits to 1. Otherwise, EINT_MASK bits will retain the original value. EINT_MASK[i] for EINTi. 0: No effect 1: Enable the corresponding MASK bit

A2030330 EINT_MASK_CLR EINT interrupt mask clear register 00000000

Bit	31	30	29	28	27	26	25	24	23	22	21	20	19	18	17	16
Name	EINT_MASK[31:16]															
Type	WO															
Reset	0	0	0	0	0	0	0	0	0	0	0	0	0	0	0	0
Bit	15	14	13	12	11	10	9	8	7	6	5	4	3	2	1	0
Name	EINT_MASK[15:0]															
Type	WO															
Reset	0	0	0	0	0	0	0	0	0	0	0	0	0	0	0	0

© 2015 - 2017 MediaTek Inc.

This document contains information that is proprietary to MediaTek Inc. ("MediaTek") and/or its licensor(s).
Any unauthorized use, reproduction or disclosure of this document in whole or in part is strictly prohibited.

Overview

Bit(s)	Mnemonic	Name	Description
31:0		EINT_MASK	**Disables mask for the associated external interrupt source** This register is used to clear individual mask bits. Only the bits set to 1 are effective, and EINT_MASK bits are also cleared (to 0). Otherwise, EINT_MASK bits will retain the original value. EINT_MASK[i] for EINTi. 0: No effect 1: Disable the corresponding MASK bit

A2030340 EINT_WAKEUP_MASK EINT wakeup event mask register FFFFFFFF

Bit	31	30	29	28	27	26	25	24	23	22	21	20	19	18	17	16
Name	EINT_WAKEUP_MASK[31:16]															
Type	RO															
Reset	1	1	1	1	1	1	1	1	1	1	1	1	1	1	1	1
Bit	15	14	13	12	11	10	9	8	7	6	5	4	3	2	1	0
Name	EINT_WAKEUP_MASK[15:0]															
Type	RO															
Reset	1	1	1	1	1	1	1	1	1	1	1	1	1	1	1	1

Overview

Bit(s)	Mnemonic	Name	Description
31:0		EINT_WAKEUP_MASK	**Wakeup event mask** This register controls whether or not the EINT source is allowed to generate a wakeup event request. Setting a specific bit position to "1" will prevent the external interrupt line from becoming active. EINT_WAKEUP_MASK[i] for EINTi. 0: Wakeup event request is enabled. 1: Wakeup event request is disabled.

A2030348 EINT_WAKEUP_MASK_SET EINT wakeup event mask set register 00000000

Bit	31	30	29	28	27	26	25	24	23	22	21	20	19	18	17	16
Name	EINT_WAKEUP_MASK[31:16]															
Type	WO															
Reset	0	0	0	0	0	0	0	0	0	0	0	0	0	0	0	0
Bit	15	14	13	12	11	10	9	8	7	6	5	4	3	2	1	0
Name	EINT_WAKEUP_MASK[15:0]															
Type	WO															
Reset	0	0	0	0	0	0	0	0	0	0	0	0	0	0	0	0

Overview

Bit(s)	Mnemonic	Name	Description
31:0		EINT_WAKEUP_MASK	**Enables mask for the associated external interrupt source** This register is used to set up individual mask bits. Only the bits set to 1 are effective; also set EINT_WAKEUP_MASK bits to 1. Otherwise, EINT_WAKEUP_MASK bits will retain the original value. EINT_WAKEUP_MASK[i] for EINTi.

© 2015 - 2017 MediaTek Inc.

This document contains information that is proprietary to MediaTek Inc. ("MediaTek") and/or its licensor(s).
Any unauthorized use, reproduction or disclosure of this document in whole or in part is strictly prohibited.

Bit(s)	Mnemonic	Name	Description
			0: No effect 1: Enable the corresponding MASK bit

A2030350 EINT_WAKEUP_MASK_CLR EINT wakeup event mask clear register 00000000

Bit	31	30	29	28	27	26	25	24	23	22	21	20	19	18	17	16
Name	EINT_WAKEUP_MASK[31:16]															
Type	WO															
Reset	0	0	0	0	0	0	0	0	0	0	0	0	0	0	0	0
Bit	15	14	13	12	11	10	9	8	7	6	5	4	3	2	1	0
Name	EINT_WAKEUP_MASK[15:0]															
Type	WO															
Reset	0	0	0	0	0	0	0	0	0	0	0	0	0	0	0	0

Overview

Bit(s)	Mnemonic	Name	Description
31:0		EINT_WAKEUP_MASK	**Disables mask for the associated external interrupt source** This register is used to clear individual mask bits. Only the bits set to 1 are effective, and EINT_WAKEUP_MASK bits are also cleared (to 0). Otherwise, EINT_WAKEUP_MASK bits will retain the original value. EINT_WAKEUP_MASK[i] for EINTi. 0: No effect 1: Disable the corresponding MASK bit

A2030360 EINT_SENS EINT sensitivity register 00000000

Bit	31	30	29	28	27	26	25	24	23	22	21	20	19	18	17	16
Name	EINT_SENS[31:16]															
Type	RO															
Reset	0	0	0	0	0	0	0	0	0	0	0	0	0	0	0	0
Bit	15	14	13	12	11	10	9	8	7	6	5	4	3	2	1	0
Name	EINT_SENS[15:0]															
Type	RO															
Reset	0	0	0	0	0	0	0	0	0	0	0	0	0	0	0	0

Overview

Bit(s)	Mnemonic	Name	Description
31:0		EINT_SENS	**Sensitivity type of the associated external interrupt source** Sensitivity type of external interrupt source. EINT_SENS[i] for EINTi. 0: Edge sensitivity 1: Level sensitivity

A2030368 EINT_SENS_SET EINT sensitivity set register 00000000

Bit	31	30	29	28	27	26	25	24	23	22	21	20	19	18	17	16
Name	EINT_SENS[31:16]															
Type	WO															
Reset	0	0	0	0	0	0	0	0	0	0	0	0	0	0	0	0
Bit	15	14	13	12	11	10	9	8	7	6	5	4	3	2	1	0

© 2015 - 2017 MediaTek Inc.
This document contains information that is proprietary to MediaTek Inc. ("MediaTek") and/or its licensor(s).
Any unauthorized use, reproduction or disclosure of this document in whole or in part is strictly prohibited.

Name	EINT_SENS[15:0]															
Type	WO															
Reset	0	0	0	0	0	0	0	0	0	0	0	0	0	0	0	0

Overview

Bit(s)	Mnemonic	Name	Description
31:0		EINT_SENS	**Enables sensitive for the associated external interrupt source.** This register is used to set up individual sensitive bits. Only the bits set to 1 are effective; also set EINT_SENS bits to 1. Otherwise, EINT_SENS bits will retain the original value. EINT_SENS[i] for EINTi. 0: No effect 1: Enable the corresponding SENS bit

A2030370 EINT_SENS_CLR EINT sensitivity clear register 00000000

Bit	31	30	29	28	27	26	25	24	23	22	21	20	19	18	17	16
Name	EINT_SENS[31:16]															
Type	WO															
Reset	0	0	0	0	0	0	0	0	0	0	0	0	0	0	0	0
Bit	15	14	13	12	11	10	9	8	7	6	5	4	3	2	1	0
Name	EINT_SENS[15:0]															
Type	WO															
Reset	0	0	0	0	0	0	0	0	0	0	0	0	0	0	0	0

Overview

Bit(s)	Mnemonic	Name	Description
31:0		EINT_SENS	**Disables sensitive for the associated external interrupt source.** This register is used to clear individual sensitive bits. Only the bits set to 1 are effective, and EINT_SENS bits are also cleared (set to 0). Otherwise, EINT_SENS bits will retain the original value. EINT_SENS[i] for EINTi. 0: No effect 1: Disable the corresponding SENS bit

A2030380 EINT_DUALEDGE_SENS EINT dual edge sensitivity register 00000000

Bit	31	30	29	28	27	26	25	24	23	22	21	20	19	18	17	16
Name	EINT_DUALEDGE_SENS[31:16]															
Type	RO															
Reset	0	0	0	0	0	0	0	0	0	0	0	0	0	0	0	0
Bit	15	14	13	12	11	10	9	8	7	6	5	4	3	2	1	0
Name	EINT_DUALEDGE_SENS[15:0]															
Type	RO															
Reset	0	0	0	0	0	0	0	0	0	0	0	0	0	0	0	0

Overview

Bit(s)	Mnemonic	Name	Description
31:0		EINT_DUALEDGE_SENS	**Dual edge sensitivity enable of the associated external interrupt source** Dual edge sensitivity enable of external interrupt source. (EINT_SENS

© 2015 - 2017 MediaTek Inc.

This document contains information that is proprietary to MediaTek Inc. ("MediaTek") and/or its licensor(s).
Any unauthorized use, reproduction or disclosure of this document in whole or in part is strictly prohibited.

Bit(s)	Mnemonic	Name	Description
			should be 0.) EINT_DUALEDGE_SENS[i] for EINTi. 0: Disable 1: Enable

A2030388 EINT_DUALEDGE_SENS_SET EINT dual edge sensitivity set register 00000000

Bit	31	30	29	28	27	26	25	24	23	22	21	20	19	18	17	16
Name	EINT_DUALEDGE_SENS[31:16]															
Type	WO															
Reset	0	0	0	0	0	0	0	0	0	0	0	0	0	0	0	0
Bit	15	14	13	12	11	10	9	8	7	6	5	4	3	2	1	0
Name	EINT_DUALEDGE_SENS[15:0]															
Type	WO															
Reset	0	0	0	0	0	0	0	0	0	0	0	0	0	0	0	0

Overview

Bit(s)	Mnemonic	Name	Description
31:0		EINT_DUALEDGE_SENS	**Enables dual edge sensitivity for the associated external interrupt source** This register is used to set up individual dual edge sensitive bits. (EINT_SENS should be 0) Only the bits set to 1 are effective; also set EINT_DUALEDGE_SENS bits to 1. Otherwise, EINT_DUALEDGE_SENS bits will retain the original value. EINT_DUALEDGE_SENS[i] for EINTi. 0: No effect 1: Enable the corresponding DUALEDGE bit

A2030390 EINT_DUALEDGE_SENS_CLR EINT dual edge sensitivity clear register 00000000

Bit	31	30	29	28	27	26	25	24	23	22	21	20	19	18	17	16
Name	EINT_DUALEDGE_SENS[31:16]															
Type	WO															
Reset	0	0	0	0	0	0	0	0	0	0	0	0	0	0	0	0
Bit	15	14	13	12	11	10	9	8	7	6	5	4	3	2	1	0
Name	EINT_DUALEDGE_SENS[15:0]															
Type	WO															
Reset	0	0	0	0	0	0	0	0	0	0	0	0	0	0	0	0

Overview

Bit(s)	Mnemonic	Name	Description
31:0		EINT_DUALEDGE_SENS	**Disables dual edge sensitive for the associated external interrupt source.** This register is used to clear individual sensitive bits. Only the bits set to 1 are effective, and EINT_DUALEDGE_SENS bits are also cleared (to 0). Otherwise, EINT_DUALEDGE_SENS bits will retain the original value. EINT_DUALEDGE_SENS[i] for EINTi. 0: No effect 1: Disable the corresponding DUALEDGE bit

© 2015 - 2017 MediaTek Inc.

This document contains information that is proprietary to MediaTek Inc. ("MediaTek") and/or its licensor(s).
Any unauthorized use, reproduction or disclosure of this document in whole or in part is strictly prohibited.

A20303a0 EINT_SOFT EINT software interrupt register 00000000

Bit	31	30	29	28	27	26	25	24	23	22	21	20	19	18	17	16
Name	EINT_SOFT[31:16]															
Type	RO															
Reset	0	0	0	0	0	0	0	0	0	0	0	0	0	0	0	0
Bit	15	14	13	12	11	10	9	8	7	6	5	4	3	2	1	0
Name	EINT_SOFT[15:0]															
Type	RO															
Reset	0	0	0	0	0	0	0	0	0	0	0	0	0	0	0	0

Overview

Bit(s)	Mnemonic	Name	Description
31:0		EINT_SOFT	**Software interrupt** This register is used for debugging purpose. EINT_SOFT[i] for EINTi. 0: No effect 1: Trigger an EINT

A20303a8 EINT_SOFT_SET EINT software interrupt set register 00000000

Bit	31	30	29	28	27	26	25	24	23	22	21	20	19	18	17	16
Name	EINT_SOFT[31:16]															
Type	WO															
Reset	0	0	0	0	0	0	0	0	0	0	0	0	0	0	0	0
Bit	15	14	13	12	11	10	9	8	7	6	5	4	3	2	1	0
Name	EINT_SOFT[15:0]															
Type	WO															
Reset	0	0	0	0	0	0	0	0	0	0	0	0	0	0	0	0

Overview

Bit(s)	Mnemonic	Name	Description
31:0		EINT_SOFT	**Enables software for the associated external interrupt source** This register is used to set up individual software bits. Only the bits set to 1 are effective, and EINT_SOFT bits are also set to 1. Otherwise, EINT_SOFT bits will retain the original value. EINT_SOFT[i] for EINTi. 0: No effect 1: Enable the corresponding SOFT bit

A20303b0 EINT_SOFT_CLR EINT software interrupt clear register 00000000

Bit	31	30	29	28	27	26	25	24	23	22	21	20	19	18	17	16
Name	EINT_SOFT[31:16]															
Type	WO															
Reset	0	0	0	0	0	0	0	0	0	0	0	0	0	0	0	0
Bit	15	14	13	12	11	10	9	8	7	6	5	4	3	2	1	0
Name	EINT_SOFT[15:0]															
Type	WO															
Reset	0	0	0	0	0	0	0	0	0	0	0	0	0	0	0	0

Overview

This document contains information that is proprietary to MediaTek Inc. ("MediaTek") and/or its licensor(s).
Any unauthorized use, reproduction or disclosure of this document in whole or in part is strictly prohibited.

Bit(s)	Mnemonic	Name	Description
31:0		EINT_SOFT	**Disables software for the associated external interrupt source** This register is used to clear individual software bits. Only the bits set to 1 are effective, and EINT_SOFT bits are also cleared (to 0). Otherwise, EINT_SOFT bits will retain the original value. EINT_SOFT[i] for EINTi. 0: No effect 1: Disable the corresponding SOFT bit

A20303c0 EINT_D0EN EINT domain 0 enable register 00000000

Bit	31	30	29	28	27	26	25	24	23	22	21	20	19	18	17	16
Name	EINT_D0EN[31:16]															
Type	RW															
Reset	0	0	0	0	0	0	0	0	0	0	0	0	0	0	0	0
Bit	15	14	13	12	11	10	9	8	7	6	5	4	3	2	1	0
Name	EINT_D0EN[15:0]															
Type	RW															
Reset	0	0	0	0	0	0	0	0	0	0	0	0	0	0	0	0

Overview

Bit(s)	Mnemonic	Name	Description
31:0		EINT_D0EN	**EINT enable config for domain 0** Each bit indicates whether the corresponding EINT is enabled for domain 0. If enabled, it will assert interrupt or wakeup_event depending on the corresponding mask bit value. EINT_D0EN[i] for EINTi. 0: Disable 1: Enable

A2030400~A203047c (step 0x4) EINTi_CON (i=0~31) EINTi config register 00000000

Bit	31	30	29	28	27	26	25	24	23	22	21	20	19	18	17	16
Name	RSTDBC															
Type	WO															
Reset	0															
Bit	15	14	13	12	11	10	9	8	7	6	5	4	3	2	1	0
Name	DBC_EN	PRESCALER			POL	DBC_CNT										
Type	RW	RW			RW	RW										
Reset	0	0	0	0	0	0	0	0	0	0	0	0	0	0	0	0

Bit(s)	Mnemonic	Name	Description
31		RSTDBC	**EINTi debounce count reset** Write once to reset the de-bounce counter so that EINT can be updated immediately without de-bounce latency. This option needs 100usec latency to take effect. 0: No effect 1: Reset

© 2015 - 2017 MediaTek Inc.
This document contains information that is proprietary to MediaTek Inc. ("MediaTek") and/or its licensor(s).
Any unauthorized use, reproduction or disclosure of this document in whole or in part is strictly prohibited.

Bit(s)	Mnemonic	Name	Description
15		DBC_EN	**Enables EINTi debounce circuit** 0: Disable 1: Enable
14:12		PRESCALER	**EINTi debounce clock cycle period prescaler.** 000: 32,768Hz, max. 0.0625sec 001: 16,384Hz 010: 8,192Hz 011: 4,096Hz 100: 2,048Hz, max. 1sec 101: 1,024Hz 110: 512Hz 111: 256Hz, max. 8secs
11		POL	**Configures polarity** Activation type of the EINT source 0: Active low 1: Active high
10:0		DBC_CNT	**Configures EINTi debounce duration** (The clock period is determined in PRESCALER.)

© 2015 - 2017 MediaTek Inc.

This document contains information that is proprietary to MediaTek Inc. (“MediaTek”) and/or its licensor(s).
Any unauthorized use, reproduction or disclosure of this document in whole or in part is strictly prohibited.

4. Direct Memory Access

4.1. General Description

A DMA controller is placed on AHB bus to support fast data transfers and off-load the processor. With this controller, specific devices on AHB or APB buses can benefit greatly from quick completion of data movement from or to memory modules. Such generic DMA controller can also be used to connect two devices other than memory modules as long as they can be addressed in memory space. Figure 4-1 illustrates the system connections.

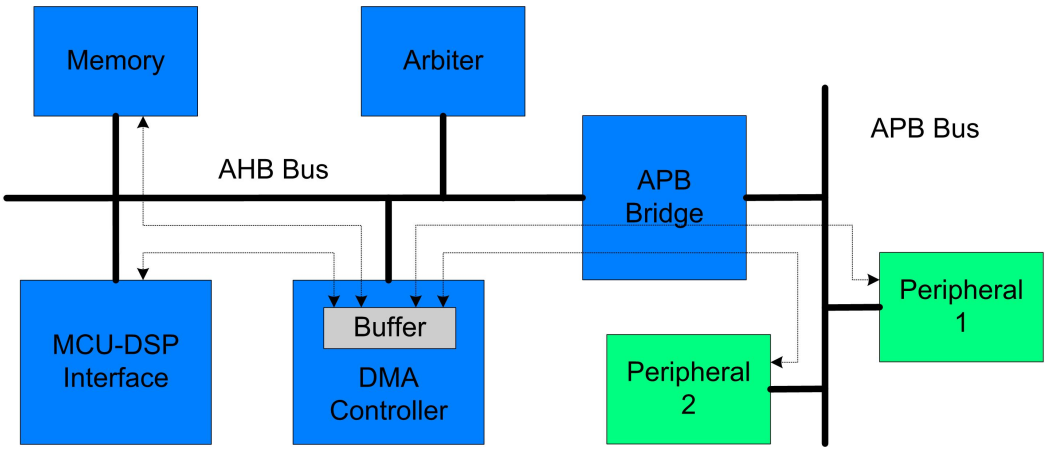

Figure 4-1. Variety data paths of DMA transfers

Up to 17 channels of simultaneous data transfers are supported. Each channel has a similar set of registers to be configured to different schemes as desired. Both interrupt and polling based schemes in handling the completion event are supported. The block diagram of such generic DMA controller is illustrated in Figure 4-2.

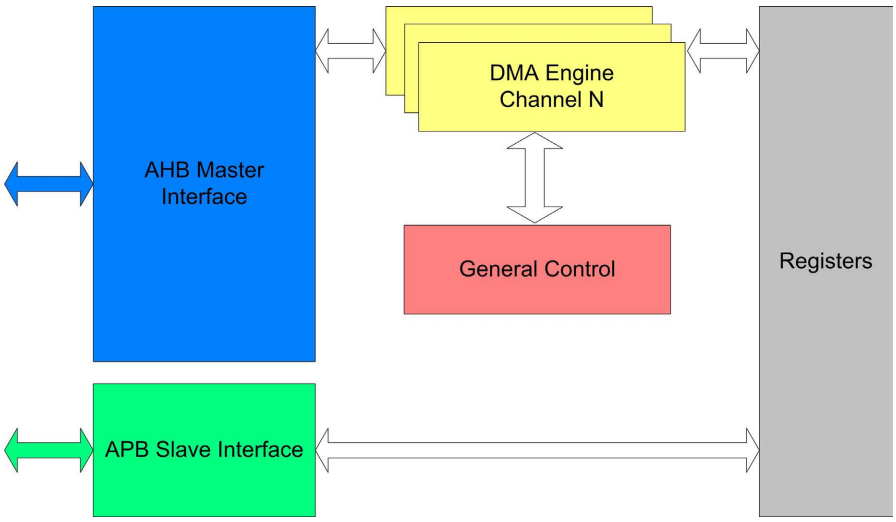

Figure 4-2. DMA block diagram

© 2015 - 2017 MediaTek Inc.

This document contains information that is proprietary to MediaTek Inc. ("MediaTek") and/or its licensor(s).
Any unauthorized use, reproduction or disclosure of this document in whole or in part is strictly prohibited.

4.1.1. Full-size and Half-size DMA Channels

There are three types of DMA channels in the DMA controller: full-size DMA channel, half-size DMA channel and virtual FIFO DMA. Channel 1 is a full-size DMA channel, channels 2 to 7 are half-size channels, and channels 9 to 18 are virtual FIFO DMA channels. The difference between the first two types of DMA channels is that both source and destination address are programmable in full-size DMA channels, but only the address of one side can be programmed in the half-size DMA channel. In half-size channels, only either the source or destination address can be programmed while the addresses of the other side are fixed.

4.1.2. Ring Buffer and Double Buffer Memory Data Movement

DMA channels 1 to 7 support ring-buffer and double-buffer memory data movement. This can be achieved by programming DMA_WPPT and DMA_WPTO, as well as setting up WPEN in the DMA_CON register to enable. Figure 4-3 illustrates how this function works. Once the transfer counter reaches WPPT, the next address will jump to WPTO address after the WPPT data transfer is completed. Note that only one side can be configured as ring-buffer or double-buffer memory, and this is controlled by WPSD in the DMA_CON register.

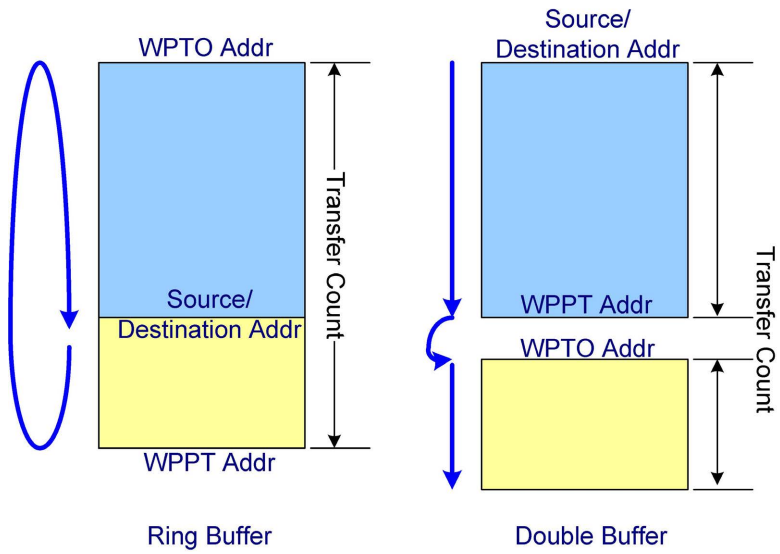

Figure 4-3. Ring buffer and double buffer memory data movement

4.1.3. Unaligned Word Access

The address of word access on AHB bus must be aligned to word boundary, or the 2 LSB is truncated to 00b. If the programmer does not notice this, an incorrect data fetch may be caused. In the case where the data are to be moved from unaligned addresses to aligned addresses, the word is usually first split into four bytes then moved byte by byte. Thus the four read and four write transfers will appear on the bus.

To improve bus efficiency, the unaligned-word access is provided in DMA2~7. When this function is enabled, the DMAs will move data from the unaligned address to aligned address by executing four continuous byte-read accesses and one word-write access, reducing the number of transfers on the bus by three.

© 2015 - 2017 MediaTek Inc.

This document contains information that is proprietary to MediaTek Inc. (“MediaTek”) and/or its licensor(s).
Any unauthorized use, reproduction or disclosure of this document in whole or in part is strictly prohibited.

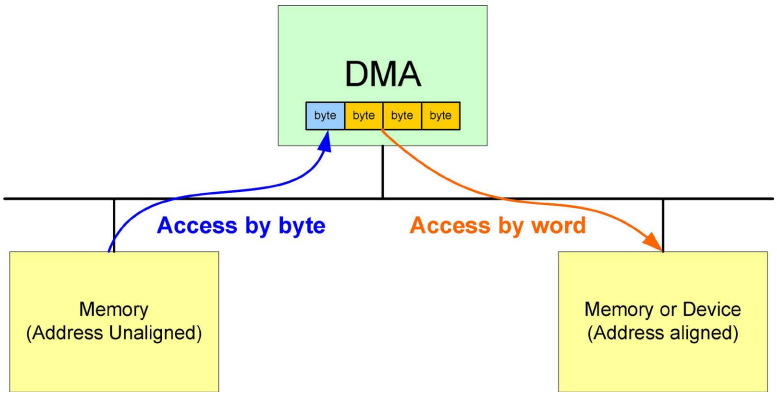

Figure 4-4. Unaligned word accesses

4.1.4. Virtual FIFO DMA

Virtual FIFO DMA is used to ease UART control. The difference between the virtual FIFO DMA and the ordinary DMA is that the virtual FIFO DMA contains additional FIFO controllers. The read and write pointers are kept in the virtual FIFO DMA. In a read from the FIFO, the read pointer points to the address of the next data. In a write to the FIFO, the write pointer moves to the next address. If the FIFO is empty, a FIFO read will not be allowed. Similarly, the data will not be written to the FIFO if the FIFO is full. Due to UART flow control requirements, an alert length is programmed. Once the FIFO space is smaller than this value, an alert signal will be issued to enable the UART flow control. The type of flow control performed depends on the setting in the UART.

Each virtual FIFO DMA can be programmed as RX or TX FIFO. This depends on the setting of DIR in the DMA_CON register. If DIR is “0” (READ), it means TX FIFO. On the other hand, if DIR is “1” (WRITE), the virtual FIFO DMA will be specified as an RX FIFO.

The virtual FIFO DMA provides an interrupt to MCU. This interrupt informs the MCU that there are data in the FIFO, and the amount of data is above or under the value defined in the DMA_COUNT register. Based on this, the MCU does not need to poll the DMA to know when the data must be removed from or put into the FIFO.

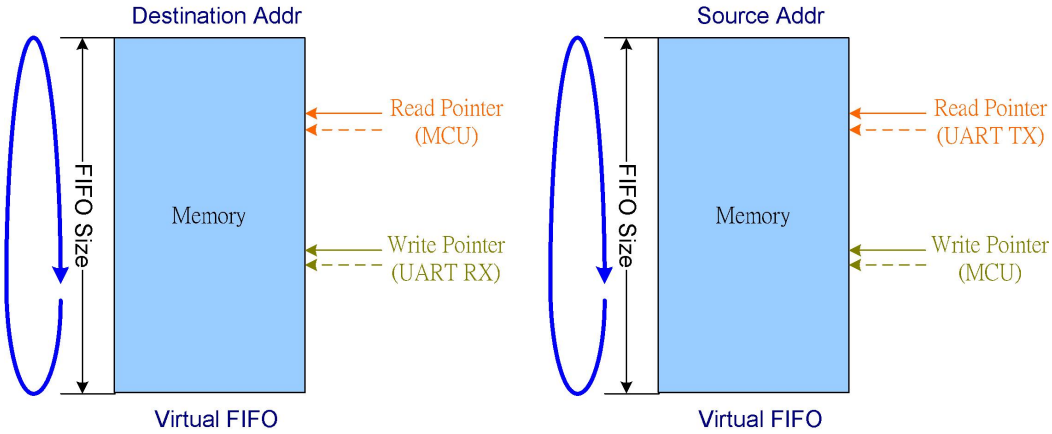

Figure 4-5. Virtual FIFO DMA

© 2015 - 2017 MediaTek Inc.

This document contains information that is proprietary to MediaTek Inc. (“MediaTek”) and/or its licensor(s).
Any unauthorized use, reproduction or disclosure of this document in whole or in part is strictly prohibited.

Table 4-1. Virtual FIFO access ports

DMA number	Address of virtual FIFO access port	Reference UART
DMA9(PD)	A092_0000h	UART1 TX
DMA10(PD)	A092_0100h	UART1 RX
DMA11(PD)	A092_0200h	UART2 TX
DMA12(PD)	A092_0300h	UART2 RX
DMA13(PD)	A092_0400h	UART3 TX
DMA14(PD)	A092_0500h	UART3 RX
DMA15(PD)	A092_0600h	UART0 TX
DMA16(PD)	A092_0700h	UART0 RX
DMA17(AO)	A292_0000h	BTIF TX
DMA18(AO)	A292_0100h	BTIF RX

Table 4-2. Function list of DMA channels

DMA number	Type	Ring buffer	Double buffer	Burst mode	Unaligned word access	Peripheral
DMA1 (PD)	Full size	●	●	●		
DMA2 (PD)	Half size	●	●	●	●	MSDC1
DMA3 (PD)	Half size	●	●	●	●	MSDC2
DMA4 (Sensor)	Half size	●	●	●	●	I2C0 TX
DMA5 (Sensor)	Half size	●	●	●	●	I2C0 RX
DMA6 (Sensor)	Half size	●	●	●	●	I2C1 TX
DMA7 (Sensor)	Half size	●	●	●	●	I2C1 RX
DMA9 (PD)	Virtual FIFO	●				UART1_TX
DMA10 (PD)	Virtual FIFO	●				UART1_RX
DMA11 (PD)	Virtual FIFO	●				UART2_TX
DMA12 (PD)	Virtual FIFO	●				UART2_RX
DMA13 (PD)	Virtual FIFO	●				UART3_TX
DMA14 (PD)	Virtual FIFO	●				UART3_RX
DMA15 (PD)	Virtual FIFO	●				UART0_TX
DMA16 (PD)	Virtual FIFO	●				UART0_RX
DMA17 (AO)	Virtual FIFO	●				BTIF_TX
DMA18 (AO)	Virtual FIFO	●				BTIF_RX

© 2015 - 2017 MediaTek Inc.

This document contains information that is proprietary to MediaTek Inc. (“MediaTek”) and/or its licensor(s).
Any unauthorized use, reproduction or disclosure of this document in whole or in part is strictly prohibited.

4.2. Register Definition

4.2.1. Register Summary

Module name: PD_DMA Base address: (+A0000000h)

Address	Name	Width	Register Function
A0000000	PD_DMA_GLBSTA	32	DMA global status register
A0000020	PD_DMA_GLB_SWRST	32	DMA global software reset
A0000100	GDMA1_SRC	32	DMA channel 1 source address register
A0000104	GDMA1_DST	32	DMA channel 1 destination address register
A0000108	GDMA1_WPPT	32	DMA channel 1 wrap point address register
A000010C	GDMA1_WPTO	32	DMA channel 1 wrap to address register
A0000110	GDMA1_COUNT	32	DMA channel 1 transfer count register
A0000114	GDMA1_CON	32	DMA channel 1 control register
A0000118	GDMA1_START	32	DMA channel 1 start register
A000011C	GDMA1_INTSTA	32	DMA channel 1 interrupt status register
A0000120	GDMA1_ACKINT	32	DMA channel 1 interrupt acknowledge register
A0000124	GDMA1_RLCT	32	DMA channel 1 remaining length of current transfer
A0000208	PDMA2_WPPT	32	DMA channel 2 wrap point address register
A000020C	PDMA2_WPTO	32	DMA channel 2 wrap to address register
A0000210	PDMA2_COUNT	32	DMA channel 2 transfer count register
A0000214	PDMA2_CON	32	DMA channel 2 control register
A0000218	PDMA2_START	32	DMA channel 2 start register
A000021C	PDMA2_INTSTA	32	DMA channel 2 interrupt status register
A0000220	PDMA2_ACKINT	32	DMA channel 2 interrupt acknowledge register
A0000224	PDMA2_RLCT	32	DMA channel 2 remaining length of current transfer
A000022C	PDMA2_PGMADDR	32	DMA channel 2 programmable address register
A0000308	PDMA3_WPPT	32	DMA channel 3 wrap point address register
A000030C	PDMA3_WPTO	32	DMA channel 3 wrap to address register
A0000310	PDMA3_COUNT	32	DMA channel 3 transfer count register
A0000314	PDMA3_CON	32	DMA channel 3 control register
A0000318	PDMA3_START	32	DMA channel 3 start register
A000031C	PDMA3_INTSTA	32	DMA channel 3 interrupt status register
A0000320	PDMA3_ACKINT	32	DMA channel 3 interrupt acknowledge register
A0000324	PDMA3_RLCT	32	DMA channel 3 remaining length of current transfer
A000032C	PDMA3_PGMADDR	32	DMA channel 3 programmable address register
A0000910	VDMA9_COUNT	32	DMA channel 9 transfer count register
A0000914	VDMA9_CON	32	DMA channel 9 control register
A0000918	VDMA9_START	32	DMA channel 9 start register
A000091C	VDMA9_INTSTA	32	DMA channel 9 interrupt status register
A0000920	VDMA9_ACKINT	32	DMA channel 9 interrupt acknowledge register
A000092C	VDMA9_PGMADDR	32	DMA channel 9 programmable address register
A0000930	VDMA9_WRPTR	32	DMA channel 9 write pointer
A0000934	VDMA9_RDPTR	32	DMA channel 9 read pointer
A0000938	VDMA9_FFCNT	32	DMA channel 9 FIFO count
A000093C	VDMA9_FFSTA	32	DMA channel 9 FIFO status
A0000940	VDMA9_ALTLEN	32	DMA channel 9 alert length

© 2015 - 2017 MediaTek Inc.

This document contains information that is proprietary to MediaTek Inc. ("MediaTek") and/or its licensor(s).
Any unauthorized use, reproduction or disclosure of this document in whole or in part is strictly prohibited.

A0000944	VDMA9_FFSIZE	32	DMA channel 9 FIFO size
A0000A10	VDMA10_COUNT	32	DMA channel 10 transfer count register
A0000A14	VDMA10_CON	32	DMA channel 10 control register
A0000A18	VDMA10_START	32	DMA channel 10 start register
A0000A1C	VDMA10_INTSTA	32	DMA channel 10 interrupt status register
A0000A20	VDMA10_ACKINT	32	DMA channel 10 interrupt acknowledge register
A0000A2C	VDMA10_PGMADDR	32	DMA channel 10 programmable address register
A0000A30	VDMA10_WRPTR	32	DMA channel 10 write pointer
A0000A34	VDMA10_RDPTR	32	DMA channel 10 read pointer
A0000A38	VDMA10_FFCNT	32	DMA channel 10 FIFO count
A0000A3C	VDMA10_FFSTA	32	DMA channel 10 FIFO status
A0000A40	VDMA10_ALTLEN	32	DMA channel 10 alert length
A0000A44	VDMA10_FFSIZE	32	DMA channel 10 FIFO size
A0000B10	VDMA11_COUNT	32	DMA channel 11 transfer count register
A0000B14	VDMA11_CON	32	DMA channel 11 control register
A0000B18	VDMA11_START	32	DMA channel 11 start register
A0000B1C	VDMA11_INTSTA	32	DMA channel 11 interrupt status register
A0000B20	VDMA11_ACKINT	32	DMA channel 11 interrupt acknowledge register
A0000B2C	VDMA11_PGMADDR	32	DMA channel 11 programmable address register
A0000B30	VDMA11_WRPTR	32	DMA channel 11 write pointer
A0000B34	VDMA11_RDPTR	32	DMA channel 11 read pointer
A0000B38	VDMA11_FFCNT	32	DMA channel 11 FIFO count
A0000B3C	VDMA11_FFSTA	32	DMA channel 11 FIFO status
A0000B40	VDMA11_ALTLEN	32	DMA channel 11 alert length
A0000B44	VDMA11_FFSIZE	32	DMA channel 11 FIFO size
A0000C10	VDMA12_COUNT	32	DMA channel 12 transfer count register
A0000C14	VDMA12_CON	32	DMA channel 12 control register
A0000C18	VDMA12_START	32	DMA channel 12 start register
A0000C1C	VDMA12_INTSTA	32	DMA channel 12 interrupt status register
A0000C20	VDMA12_ACKINT	32	DMA channel 12 interrupt acknowledge register
A0000C2C	VDMA12_PGMADDR	32	DMA channel 12 programmable address register
A0000C30	VDMA12_WRPTR	32	DMA channel 12 write pointer
A0000C34	VDMA12_RDPTR	32	DMA channel 12 read pointer
A0000C38	VDMA12_FFCNT	32	DMA channel 12 FIFO count
A0000C3C	VDMA12_FFSTA	32	DMA channel 12 FIFO status
A0000C40	VDMA12_ALTLEN	32	DMA channel 12 alert length
A0000C44	VDMA12_FFSIZE	32	DMA channel 12 FIFO size
A0000D10	VDMA13_COUNT	32	DMA channel 13 transfer count register
A0000D14	VDMA13_CON	32	DMA channel 13 control register
A0000D18	VDMA13_START	32	DMA channel 13 start register
A0000D1C	VDMA13_INTSTA	32	DMA channel 13 interrupt status register
A0000D20	VDMA13_ACKINT	32	DMA channel 13 interrupt acknowledge register
A0000D2C	VDMA13_PGMADDR	32	DMA channel 13 programmable address register
A0000D30	VDMA13_WRPTR	32	DMA channel 13 write pointer
A0000D34	VDMA13_RDPTR	32	DMA channel 13 read pointer
A0000D38	VDMA13_FFCNT	32	DMA channel 13 FIFO count
A0000D3C	VDMA13_FFSTA	32	DMA channel 13 FIFO status
A0000D40	VDMA13_ALTLEN	32	DMA channel 13 alert length
A0000D44	VDMA13_FFSIZE	32	DMA channel 13 FIFO size

© 2015 - 2017 MediaTek Inc.

This document contains information that is proprietary to MediaTek Inc. (“MediaTek”) and/or its licensor(s).
Any unauthorized use, reproduction or disclosure of this document in whole or in part is strictly prohibited.

A0000E10	VDMA14_COUNT	32	DMA channel 14 transfer count register
A0000E14	VDMA14_CON	32	DMA channel 14 control register
A0000E18	VDMA14_START	32	DMA channel 14 start register
A0000E1C	VDMA14_INTSTA	32	DMA channel 14 interrupt status register
A0000E20	VDMA14_ACKINT	32	DMA channel 14 interrupt acknowledge register
A0000E2C	VDMA14_PGMADDR	32	DMA channel 14 programmable address register
A0000E30	VDMA14_WRPTR	32	DMA channel 14 write pointer
A0000E34	VDMA14_RDPTR	32	DMA channel 14 read pointer
A0000E38	VDMA14_FFCNT	32	DMA channel 14 FIFO count
A0000E3C	VDMA14_FFSTA	32	DMA channel 14 FIFO status
A0000E40	VDMA14_ALTLEN	32	DMA channel 14 alert length
A0000E44	VDMA14_FFSIZE	32	DMA channel 14 FIFO size
A0000F10	VDMA15_COUNT	32	DMA channel 15 transfer count register
A0000F14	VDMA15_CON	32	DMA channel 15 control register
A0000F18	VDMA15_START	32	DMA channel 15 start register
A0000F1C	VDMA15_INTSTA	32	DMA channel 15 interrupt status register
A0000F20	VDMA15_ACKINT	32	DMA channel 15 interrupt acknowledge register
A0000F2C	VDMA15_PGMADDR	32	DMA channel 15 programmable address register
A0000F30	VDMA15_WRPTR	32	DMA channel 15 write pointer
A0000F34	VDMA15_RDPTR	32	DMA channel 15 read pointer
A0000F38	VDMA15_FFCNT	32	DMA channel 15 FIFO count
A0000F3C	VDMA15_FFSTA	32	DMA channel 15 FIFO status
A0000F40	VDMA15_ALTLEN	32	DMA channel 15 alert length
A0000F44	VDMA15_FFSIZE	32	DMA channel 15 FIFO size
A0001010	VDMA16_COUNT	32	DMA channel 16 transfer count register
A0001014	VDMA16_CON	32	DMA channel 16 control register
A0001018	VDMA16_START	32	DMA channel 16 start register
A000101C	VDMA16_INTSTA	32	DMA channel 16 interrupt status register
A0001020	VDMA16_ACKINT	32	DMA channel 16 interrupt acknowledge register
A000102C	VDMA16_PGMADDR	32	DMA channel 16 programmable address register
A0001030	VDMA16_WRPTR	32	DMA channel 16 write pointer
A0001034	VDMA16_RDPTR	32	DMA channel 16 read pointer
A0001038	VDMA16_FFCNT	32	DMA channel 16 FIFO count
A000103C	VDMA16_FFSTA	32	DMA channel 16 FIFO status
A0001040	VDMA16_ALTLEN	32	DMA channel 16 alert length
A0001044	VDMA16_FFSIZE	32	DMA channel 16 FIFO size

Module name: AO_DMA Base address: (+A2070000h)

Address	Name	Width	Register Function
A2070000	AO_DMA_GLBSTA	32	DMA global status register
A2070020	AO_DMA_GLB_SWRST	32	DMA global software reset
A2070910	VDMA17_COUNT	32	DMA channel 17 transfer count register
A2070914	VDMA17_CON	32	DMA channel 17 control register
A2070918	VDMA17_START	32	DMA channel 17 start register
A207091C	VDMA17_INTSTA	32	DMA channel 17 interrupt status register
A2070920	VDMA17_ACKINT	32	DMA channel 17 interrupt acknowledge register
A207092C	VDMA17_PGMADDR	32	DMA channel 17 programmable address register

© 2015 - 2017 MediaTek Inc.

This document contains information that is proprietary to MediaTek Inc. ("MediaTek") and/or its licensor(s).
Any unauthorized use, reproduction or disclosure of this document in whole or in part is strictly prohibited.

A2070930	VDMA17_WRPTR	32	DMA channel 17 write pointer
A2070934	VDMA17_RDPTR	32	DMA channel 17 read pointer
A2070938	VDMA17_FFCNT	32	DMA channel 17 FIFO count
A207093C	VDMA17_FFSTA	32	DMA channel 17 FIFO status
A2070940	VDMA17_ALTLEN	32	DMA channel 17 alert length
A2070944	VDMA17_FFSIZE	32	DMA channel 17 FIFO size
A2070A10	VDMA18_COUNT	32	DMA channel 18 transfer count register
A2070A14	VDMA18_CON	32	DMA channel 18 control register
A2070A18	VDMA18_START	32	DMA channel 18 start register
A2070A1C	VDMA18_INTSTA	32	DMA channel 18 interrupt status register
A2070A20	VDMA18_ACKINT	32	DMA channel 18 interrupt acknowledge register
A2070A2C	VDMA18_PGMADDR	32	DMA channel 18 programmable address register
A2070A30	VDMA18_WRPTR	32	DMA channel 18 write pointer
A2070A34	VDMA18_RDPTR	32	DMA channel 18 read pointer
A2070A38	VDMA18_FFCNT	32	DMA channel 18 FIFO count
A2070A3C	VDMA18_FFSTA	32	DMA channel 18 FIFO status
A2070A40	VDMA18_ALTLEN	32	DMA channel 18 alert length
A2070A44	VDMA18_FFSIZE	32	DMA channel 18 FIFO size

Module name: SENSOR_DMA Base address: (+A0230000h)

Address	Name	Width	Register Function
A0230000	SENSOR_DMA_GLBSTA	32	DMA global status register
A0230020	SENSOR_DMA_GLB_SWRST	32	DMA global software reset
A0230208	PDMA4_WPPT	32	DMA channel 4 wrap point address register
A023020C	PDMA4_WPTO	32	DMA channel 4 wrap to address register
A0230210	PDMA4_COUNT	32	DMA channel 4 transfer count register
A0230214	PDMA4_CON	32	DMA channel 4 control register
A0230218	PDMA4_START	32	DMA channel 4 start register
A023021C	PDMA4_INTSTA	32	DMA channel 4 interrupt status register
A0230220	PDMA4_ACKINT	32	DMA channel 4 interrupt acknowledge register
A0230224	PDMA4_RLCT	32	DMA channel 4 remaining length of current transfer
A023022C	PDMA4_PGMADDR	32	DMA channel 4 programmable address register
A0230308	PDMA5_WPPT	32	DMA channel 5 wrap point address register
A023030C	PDMA5_WPTO	32	DMA channel 5 wrap to address register
A0230310	PDMA5_COUNT	32	DMA channel 5 transfer count register
A0230314	PDMA5_CON	32	DMA channel 5 control register
A0230318	PDMA5_START	32	DMA channel 5 start register
A023031C	PDMA5_INTSTA	32	DMA channel 5 interrupt status register
A0230320	PDMA5_ACKINT	32	DMA channel 5 interrupt acknowledge register
A0230324	PDMA5_RLCT	32	DMA channel 5 remaining length of current transfer
A023032C	PDMA5_PGMADDR	32	DMA channel 5 programmable address register
A0230408	PDMA6_WPPT	32	DMA channel 6 wrap point address register
A023040C	PDMA6_WPTO	32	DMA channel 6 wrap to address register
A0230410	PDMA6_COUNT	32	DMA channel 6 transfer count register
A0230414	PDMA6_CON	32	DMA channel 6 control register
A0230418	PDMA6_START	32	DMA channel 6 start register
A023041C	PDMA6_INTSTA	32	DMA channel 6 interrupt status register

© 2015 - 2017 MediaTek Inc.

This document contains information that is proprietary to MediaTek Inc. ("MediaTek") and/or its licensor(s).
Any unauthorized use, reproduction or disclosure of this document in whole or in part is strictly prohibited.

A0230420	PDMA6_ACKINT	32	DMA channel 6 interrupt acknowledge register
A0230424	PDMA6_RLCT	32	DMA channel 6 remaining length of current transfer
A023042C	PDMA6_PGMADDR	32	DMA channel 6 programmable address register
A0230508	PDMA7_WPPT	32	DMA channel 7 wrap point address register
A023050C	PDMA7_WPTO	32	DMA channel 7 wrap to address register
A0230510	PDMA7_COUNT	32	DMA channel 7 transfer count register
A0230514	PDMA7_CON	32	DMA channel 7 control register
A0230518	PDMA7_START	32	DMA channel 7 start register
A023051C	PDMA7_INTSTA	32	DMA channel 7 interrupt status register
A0230520	PDMA7_ACKINT	32	DMA channel 7 interrupt acknowledge register
A0230524	PDMA7_RLCT	32	DMA channel 7 remaining length of current transfer
A023052C	PDMA7_PGMADDR	32	DMA channel 7 programmable address register

4.2.2. Global Registers

A0000000 PD_DMA_GLB_STA DMA global status register 00000000

Bit	31	30	29	28	27	26	25	24	23	22	21	20	19	18	17	16
Name	IT 16	RUN 16	IT 15	RUN 15	IT 14	RUN 14	IT 13	RUN 13	IT 12	RUN 12	IT 11	RUN 11	IT 10	RUN 10	IT 9	RUN 9
Type	RO	RO	RO	RO	RO	RO	RO	RO	RO	RO	RO	RO	RO	RO	RO	RO
Reset	0	0	0	0	0	0	0	0	0	0	0	0	0	0	0	0
Bit	15	14	13	12	11	10	9	8	7	6	5	4	3	2	1	0
Name											IT 3	RUN 3	IT 2	RUN 2	IT 1	RUN 1
Type											RO	RO	RO	RO	RO	RO
Reset											0	0	0	0	0	0

Bit(s)	Name	Description
31	IT16	**Channel 16 interrupt status**
30	RUN16	**Channel 16 running status**
29	IT15	**Channel 15 interrupt status**
28	RUN15	**Channel 15 running status**
27	IT14	**Channel 14 interrupt status**
26	RUN14	**Channel 14 running status**
25	IT13	**Channel 13 interrupt status**
24	RUN13	**Channel 13 running status**
23	IT12	**Channel 12 interrupt status**
22	RUN12	**Channel 12 running status**
21	IT11	**Channel 11 interrupt status**
20	RUN11	**Channel 11 running status**
19	IT10	**Channel 10 interrupt status**
18	RUN10	**Channel 10 running status**
17	IT9	**Channel 9 interrupt status**
16	RUN9	**Channel 9 running status**
5	IT3	**Channel 3 interrupt status**
4	RUN3	**Channel 3 running status**
3	IT2	**Channel 2 interrupt status**
2	RUN2	**Channel 2 running status**

© 2015 - 2017 MediaTek Inc.

This document contains information that is proprietary to MediaTek Inc. ("MediaTek") and/or its licensor(s).
Any unauthorized use, reproduction or disclosure of this document in whole or in part is strictly prohibited.

Bit(s)	Name	Description
1	IT1	**Channel 1 interrupt status**
0	RUN1	**Channel 1 running status**

A0000020 **PD_DMA_GLB_SWRST** **DMA global software reset** **00000000**

Bit	31	30	29	28	27	26	25	24	23	22	21	20	19	18	17	16
Name																
Type																
Reset																
Bit	15	14	13	12	11	10	9	8	7	6	5	4	3	2	1	0
Name																SW_RESET
Type																RW
Reset																0

Bit(s)	Name	Description
0	SW_RESET	**Software reset** Write 1 to reset.

A2070000 **AO_DMA_GLB_STA** **DMA global status register** **00000000**

Bit	31	30	29	28	27	26	25	24	23	22	21	20	19	18	17	16
Name													IT18	RUN18	IT17	RUN17
Type													RO	RO	RO	RO
Reset													0	0	0	0
Bit	15	14	13	12	11	10	9	8	7	6	5	4	3	2	1	0
Name																
Type																
Reset																

Bit(s)	Name	Description
19	IT18	**Channel 18 interrupt status**
18	RUN18	**Channel 18 running status**
17	IT17	**Channel 17 interrupt status**
16	RUN17	**Channel 17 running status**

A2070020 **AO_DMA_GLB_SWRST** **DMA global software reset** **00000000**

Bit	31	30	29	28	27	26	25	24	23	22	21	20	19	18	17	16
Name																
Type																
Reset																
Bit	15	14	13	12	11	10	9	8	7	6	5	4	3	2	1	0
Name																SW_RESET
Type																RW
Reset																0

Bit(s)	Name	Description
0	SW_RESET	**Software reset** Write 1 to reset.

© 2015 - 2017 MediaTek Inc.

This document contains information that is proprietary to MediaTek Inc. ("MediaTek") and/or its licensor(s).
Any unauthorized use, reproduction or disclosure of this document in whole or in part is strictly prohibited.

A0230000 SENSOR_DMA_GLBSTA DMA global status register 00000000

Bit	31	30	29	28	27	26	25	24	23	22	21	20	19	18	17	16
Name																
Type																
Reset																
Bit	15	14	13	12	11	10	9	8	7	6	5	4	3	2	1	0
Name							IT7	RUN7	IT6	RUN6	IT5	RUN5	IT4	RUN4		
Type							RO	RO	RO	RO	RO	RO	RO	RO		
Reset							0	0	0	0	0	0	0	0		

Bit(s)	Name	Description
9	IT7	**Channel 10 interrupt status**
8	RUN7	**Channel 10 running status**
7	IT6	**Channel 4 interrupt status**
6	RUN6	**Channel 4 running status**
5	IT5	**Channel 3 interrupt status**
4	RUN5	**Channel 3 running status**
3	IT4	**Channel 2 interrupt status**
2	RUN4	**Channel 2 running status**

A0230020 SENSOR_DMA_GLB_SWRST DMA global software reset 00000000

Bit	31	30	29	28	27	26	25	24	23	22	21	20	19	18	17	16
Name																
Type																
Reset																
Bit	15	14	13	12	11	10	9	8	7	6	5	4	3	2	1	0
Name																SW_RESET
Type																RW
Reset																0

Bit(s)	Name	Description
0	SW_RESET	**Software reset** Write 1 to reset.

4.2.3. GDMA (Full-size DMA) Registers

A0000100 GDMA1_SRC DMA channel 1 source address register 00000000

Bit	31	30	29	28	27	26	25	24	23	22	21	20	19	18	17	16
Name	SRC[31:16]															
Type	RW															
Reset	0	0	0	0	0	0	0	0	0	0	0	0	0	0	0	0
Bit	15	14	13	12	11	10	9	8	7	6	5	4	3	2	1	0
Name	SRC[15:0]															
Type	RW															
Reset	0	0	0	0	0	0	0	0	0	0	0	0	0	0	0	0

Bit(s)	Name	Description
31:0	SRC	**GDMA source address**

© 2015 - 2017 MediaTek Inc.

This document contains information that is proprietary to MediaTek Inc. ("MediaTek") and/or its licensor(s).
Any unauthorized use, reproduction or disclosure of this document in whole or in part is strictly prohibited.

Bit(s)	Name	Description
		The register contains the base or current source address that the DMA channel is currently operating in. Writing to this register specifies the base address of the transfer source for a DMA channel. Reading this register will return the address value from which the DMA is reading.

A0000104 GDMA1_DST DMA channel 1 destination address register 00000000

Bit	31	30	29	28	27	26	25	24	23	22	21	20	19	18	17	16
Name	DST[31:16]															
Type	RW															
Reset	0	0	0	0	0	0	0	0	0	0	0	0	0	0	0	0
Bit	15	14	13	12	11	10	9	8	7	6	5	4	3	2	1	0
Name	DST[15:0]															
Type	RW															
Reset	0	0	0	0	0	0	0	0	0	0	0	0	0	0	0	0

Bit(s)	Name	Description
31:0	DST	**GDMA destination address** The register contains the base or current destination address that the DMA channel is currently operating in. Writing to this register specifies the base address of the transfer destination for a DMA channel. Reading this register will return the address value to which the DMA is writing.

A0000108 GDMA1_WPPT DMA channel 1 wrap point address register 00000000

Bit	31	30	29	28	27	26	25	24	23	22	21	20	19	18	17	16
Name																
Type																
Reset																
Bit	15	14	13	12	11	10	9	8	7	6	5	4	3	2	1	0
Name	WPPT															
Type	RW															
Reset	0	0	0	0	0	0	0	0	0	0	0	0	0	0	0	0

Bit(s)	Name	Description
15:0	WPPT	**Transfer counts before jump** The register specifies the transfer count required to perform before the jump point. This can be used to support the ring buffer or double buffer style memory accesses. To enable this function, two control bits, WPEN and WPSD, in the DMA control register must be programmed. If the transfer counter in the DMA engine matches this value, an address jump will occur, and the next address will be the address specified in GDMAn_WPTO. To enable this function, set up WPEN in GDMAn_CON. Note: The total size of data specified in the wrap point count in a DMA channel is determined by LEN together with SIZE in GDMAn_CON, i.e. WPPT x SIZE.

A000010C GDMA1_WPTO DMA channel 1 wrap to address register 00000000

Bit	31	30	29	28	27	26	25	24	23	22	21	20	19	18	17	16
Name	WPTO[31:16]															
Type	RW															
Reset	0	0	0	0	0	0	0	0	0	0	0	0	0	0	0	0
Bit	15	14	13	12	11	10	9	8	7	6	5	4	3	2	1	0
Name	WPTO[15:0]															
Type	RW															
Reset	0	0	0	0	0	0	0	0	0	0	0	0	0	0	0	0

© 2015 - 2017 MediaTek Inc.

This document contains information that is proprietary to MediaTek Inc. ("MediaTek") and/or its licensor(s).
Any unauthorized use, reproduction or disclosure of this document in whole or in part is strictly prohibited.

Bit(s)	Name	Description
31:0	WPTO	**Jump address** The register specifies the address of the jump destination of a given DMA transfer to support the ring buffer or double buffer style memory accesses. To enable this function, set up two control bits, WPEN and WPSD, in the DMA control register. To enable this function, WPEN in GDMAn_CON should be set.

A0000110 GDMA1_COUNT DMA channel 1 transfer count register 00000000

Bit	31	30	29	28	27	26	25	24	23	22	21	20	19	18	17	16
Name																
Type																
Reset																
Bit	15	14	13	12	11	10	9	8	7	6	5	4	3	2	1	0
Name	COUNT															
Type	RW															
Reset	0	0	0	0	0	0	0	0	0	0	0	0	0	0	0	0

Bit(s)	Name	Description
15:0	COUNT	**Amount of total transfer counts** This register specifies the amount of total transfer counts the DMA channel is required to perform. Upon completion, the DMA channel will generate an interrupt request to the processor when ITEN in GDMAn_CON is set to 1. Note: The total size of data transferred by a DMA channel is determined by LEN together with SIZE in GDMAn_CON, i.e. LEN x SIZE.

A0000114 GDMA1_CON DMA channel 1 control register 00000000

Bit	31	30	29	28	27	26	25	24	23	22	21	20	19	18	17	16
Name															WPEN	WPSD
Type															RW	RW
Reset															0	0
Bit	15	14	13	12	11	10	9	8	7	6	5	4	3	2	1	0
Name	ITEN						BURST					DREQ	DINC	SINC	SIZE	
Type	RW						RW					RW	RW	RW	RW	
Reset	0						0	0				0	0	0	0	0

Bit(s)	Name	Description
17	WPEN	**Enables wrap** Address-wrapping for ring buffer and double buffer. The next address of DMA will jump to WRAP TO address when the current address matches WRAP POINT count. 0: Disable 1: Enable
16	WPSD	**Selects wrap** The side using address-wrapping function. Only one side of a DMA channel can activate the address-wrapping function at a time. 0: Address-wrapping on source 1: Address-wrapping on destination
15	ITEN	**Enables DMA transfer completion interrupt** 0: Disable 1: Enable
9:8	BURST	**Transfer type** The burst-type transfers have better bus efficiency. Mass data movement is recommended to use this type of transfer.

© 2015 - 2017 MediaTek Inc.

This document contains information that is proprietary to MediaTek Inc. ("MediaTek") and/or its licensor(s).
Any unauthorized use, reproduction or disclosure of this document in whole or in part is strictly prohibited.

Bit(s)	Name	Description
		Note: The burst-type transfer will not stop until all the beats in a burst are completed or the transfer length is reached. Which transfer type can be used is restricted by the SIZE. If SIZE is 00b, i.e. byte transfer, all of the four transfer types can be used. If SIZE is 01b, i.e. half-word transfer, 16-beat incrementing burst cannot be used. If SIZE is 10b, i.e. word transfer, only single and 4-beat incrementing burst can be used. 00: Single 01: Reserved 10: 4-beat incrementing burst 11: Reserved
4	DREQ	**Throttle and handshake control for DMA transfer** The DMA master is able to throttle down the transfer rate by request-grant handshake. 0: No throttle control during DMA transfer or transfers occurr only between memories 1: Hardware handshake management
3	DINC	**Incremental destination address** The destination addresses increase every transfer. If the setting of SIZE is byte, the destination addresses will increase by 1 every single transfer. If half-word, it will increase by 2; and if word, increase by 4. 0: Disable 1: Enable
2	SINC	**Incremental source address** The source addresses increase every transfer. If the setting of SIZE is byte, the source addresses will increase by 1 every single transfer. If half-word, it will increase by 2; and if word, increase by 4. 0: Disable 1: Enable
1:0	SIZE	**Data size within the confine of a bus cycle per transfer** These bits confine the data transfer size between the source and destination to the specified value for individual bus cycle. The size is in terms of byte, and the maximum value is 4 bytes. It is mainly decided by the data width of a DMA master. 00: Byte transfer/1 byte 01: Half-word transfer/2 bytes 10: Word transfer/4 bytes 11: Reserved

A0000118 GDMA1_START DMA channel 1 start register 00000000

Bit	31	30	29	28	27	26	25	24	23	22	21	20	19	18	17	16
Name																
Type																
Reset																
Bit	15	14	13	12	11	10	9	8	7	6	5	4	3	2	1	0
Name	STR															
Type	RW															
Reset	0															

Bit(s)	Name	Description
15	STR	**Start control for a DMA channel** This register controls the activity of a DMA channel. Note that prior to setting STR to 1, all the configurations should be done by giving proper value to the registers. Once STR is set to 1, the hardware will not clear it automatically no matter the DMA channel accomplishes the DMA transfer or not. In other words, the value of STR stays at 1 regardless of the completion of the DMA transfer. Therefore, the software program should clear STR to 0 before restarting another DMA transfer. If this bit is cleared to 0 when DMA transfer is active, the software

This document contains information that is proprietary to MediaTek Inc. ("MediaTek") and/or its licensor(s).
Any unauthorized use, reproduction or disclosure of this document in whole or in part is strictly prohibited.

Bit(s)	Name	Description
		should poll RUNn in DMA_GLBSTA after this bit is cleared to ensure the current DMA transfer is terminated by the DMA engine. 0: The DMA channel is stopped. 1: The DMA channel is started and running.

A000011C GDMA1_INTSTA DMA channel 1 interrupt status register 00000000

Bit	31	30	29	28	27	26	25	24	23	22	21	20	19	18	17	16
Name																
Type																
Reset																
Bit	15	14	13	12	11	10	9	8	7	6	5	4	3	2	1	0
Name	INT															
Type	RW															
Reset	0															

Bit(s)	Name	Description
15	INT	**Interrupt status for DMA channel** 0: No interrupt request is generated. 1: One interrupt request is pending and waiting for service.

A0000120 GDMA1_ACKINT DMA channel 1 interrupt acknowledge register 00000000

Bit	31	30	29	28	27	26	25	24	23	22	21	20	19	18	17	16
Name																
Type																
Reset																
Bit	15	14	13	12	11	10	9	8	7	6	5	4	3	2	1	0
Name	ACK															
Type	WO															
Reset	0															

Bit(s)	Name	Description
15	ACK	**Interrupt acknowledge for the DMA channel** 0: No effect 1: Interrupt request is acknowledged and should be relinquished.

A0000124 GDMA1_RLCT DMA channel 1 remaining length of current transfer 00000000

Bit	31	30	29	28	27	26	25	24	23	22	21	20	19	18	17	16
Name																
Type																
Reset																
Bit	15	14	13	12	11	10	9	8	7	6	5	4	3	2	1	0
Name	RLCT															
Type	RO															
Reset	0	0	0	0	0	0	0	0	0	0	0	0	0	0	0	0

Bit(s)	Name	Description
15:0	RLCT	**Reflects left count of transfer** Note: This value is transfer count, not the transfer data size.

© 2015 - 2017 MediaTek Inc.

This document contains information that is proprietary to MediaTek Inc. ("MediaTek") and/or its licensor(s).
Any unauthorized use, reproduction or disclosure of this document in whole or in part is strictly prohibited.

4.2.3.1. PDMA (Half-size DMA) Registers

Only PDMA2 register is listed below. The register contents of other PDMA channels are the same as those of PDMA2, only that the addresses are different. For register addresses, refer to the register summary section.

A0000208 PDMA2_WPPT DMA channel 2 wrap point address register 00000000

Bit	31	30	29	28	27	26	25	24	23	22	21	20	19	18	17	16
Name																
Type																
Reset																
Bit	15	14	13	12	11	10	9	8	7	6	5	4	3	2	1	0
Name	WPPT															
Type	RW															
Reset	0	0	0	0	0	0	0	0	0	0	0	0	0	0	0	0

Bit(s)	Name	Description
15:0	WPPT	**Transfer counts before jump** The register specifies the transfer count required to perform before the jump point. This can be used to support the ring buffer or double buffer style memory accesses. To enable this function, two control bits, WPEN and WPSD, in the DMA control register must be programmed. If the transfer counter in the DMA engine matches this value, an address jump will occur, and the next address will be the address specified in PDMAn_WPTO. To enable this function, set up WPEN in PDMAn_CON. Note: The total size of data specified in the wrap point count in a DMA channel is determined by LEN together with SIZE in PDMAn_CON, i.e. WPPT x SIZE.

A000020C PDMA2_WPTO DMA channel 2 wrap to address register 00000000

Bit	31	30	29	28	27	26	25	24	23	22	21	20	19	18	17	16
Name	WPTO[31:16]															
Type	RW															
Reset	0	0	0	0	0	0	0	0	0	0	0	0	0	0	0	0
Bit	15	14	13	12	11	10	9	8	7	6	5	4	3	2	1	0
Name	WPTO[15:0]															
Type	RW															
Reset	0	0	0	0	0	0	0	0	0	0	0	0	0	0	0	0

Bit(s)	Name	Description
31:0	WPTO	**Jump address** The register specifies the address of the jump destination of a given DMA transfer to support the ring buffer or double buffer style memory accesses. To enable this function, set up two control bits, WPEN and WPSD, in the DMA control register. To enable this function, WPEN in PDMAn_CON should be set.

A0000210 PDMA2_COUNT DMA channel 2 transfer count register 00000000

Bit	31	30	29	28	27	26	25	24	23	22	21	20	19	18	17	16
Name																
Type																
Reset																
Bit	15	14	13	12	11	10	9	8	7	6	5	4	3	2	1	0
Name	COUNT															
Type	RW															
Reset	0	0	0	0	0	0	0	0	0	0	0	0	0	0	0	0

© 2015 - 2017 MediaTek Inc.

This document contains information that is proprietary to MediaTek Inc. ("MediaTek") and/or its licensor(s).
Any unauthorized use, reproduction or disclosure of this document in whole or in part is strictly prohibited.

Bit(s)	Name	Description
15:0	COUNT	**Amount of total transfer counts** This register specifies the amount of total transfer counts the DMA channel is required to perform. Upon completion, the DMA channel will generate an interrupt request to the processor when ITEN in PDMAn_CON is set to 1. Note: The total size of data transferred by a DMA channel is determined by LEN together with SIZE in PDMAn_CON, i.e. LEN x SIZE.

A0000214 PDMA2_CON DMA channel 2 control register 00000000

Bit	31	30	29	28	27	26	25	24	23	22	21	20	19	18	17	16
Name														DIR	WPEN	WPSD
Type														RW	RW	RW
Reset														0	0	0
Bit	15	14	13	12	11	10	9	8	7	6	5	4	3	2	1	0
Name	ITEN						BURST				B2W	DREQ	DINC	SINC	SIZE	
Type	RW						RW				RW	RW	RW	RW	RW	
Reset	0						0	0			0	0	0	0	0	0

Bit(s)	Name	Description
18	DIR	**Directions of PDMA transfer** The direction is from the perspective of the DMA masters. WRITE means reading from master then writing to the address specified in PDMAn_PGMADDR, and vice versa. No effect on channel 1. 0: Peripheral TX 1: Peripheral RX
17	WPEN	**Enables wrap** Address-wrapping for ring buffer and double buffer. The next address of DMA will jump to WRAP TO address when the current address matches WRAP POINT count. 0: Disable 1: Enable
16	WPSD	**Selects wrap** The side using address-wrapping function. Only one side of a DMA channel can activate the address-wrapping function at a time. 0: Address-wrapping on source 1: Address-wrapping on destination
15	ITEN	**Enables DMA transfer completion interrupt** 0: Disable 1: Enable
9:8	BURST	**Transfer type** The burst-type transfers have better bus efficiency. Mass data movement is recommended to use this type of transfer. Note: The burst-type transfer will not stop until all of the beats in a burst are completed or the transfer length is reached. Which transfer type can be used is restricted by the SIZE. If SIZE is 00b, i.e. byte transfer, all of the four transfer types can be used. If SIZE is 01b, i.e. half-word transfer, 16-beat incrementing burst cannot be used. If SIZE is 10b, i.e. word transfer, only single and 4-beat incrementing burst can be used. 00: Single 01: Reserved 10: 4-beat incrementing burst 11: Reserved
5	B2W	**Byte to word** Word to byte or byte to word transfer for the applications of transferring non-word-aligned-address data to word-aligned-address data. Note: BURST is set to 4-beat burst this function is enabled, and the SIZE is set to

This document contains information that is proprietary to MediaTek Inc. ("MediaTek") and/or its licensor(s).
Any unauthorized use, reproduction or disclosure of this document in whole or in part is strictly prohibited.

Bit(s)	Name	Description
		byte. 0: Disable 1: Enable
4	DREQ	**Throttle and handshake control for DMA transfer** The DMA master is able to throttle down the transfer rate by request-grant handshake. 0: No throttle control during DMA transfer or transfers occurred only between memories 1: Hardware handshake management
3	DINC	**Incremental destination address** The destination addresses increase every transfer. If the setting of SIZE is byte, the destination addresses will increase by 1 every single transfer. If half-word, it will increase by 2; and if word, increase by 4. 0: Disable 1: Enable
2	SINC	**Incremental source address** The source addresses increase every transfer. If the setting of SIZE is byte, the source addresses will increase by 1 every single transfer. If half-word, it will increase by 2; and if word, increase by 4. 0: Disable 1: Enable
1:0	SIZE	**Data size within the confine of a bus cycle per transfer** These bits confine the data transfer size between the source and destination to the specified value for individual bus cycle. The size is in terms of byte, and the maximum value is 4 bytes. It is mainly decided by the data width of a DMA master. 00: Byte transfer/1 byte 01: Half-word transfer/2 bytes 10: Word transfer/4 bytes 11: Reserved

A0000218 PDMA2_START DMA channel 2 start register 00000000

Bit	31	30	29	28	27	26	25	24	23	22	21	20	19	18	17	16
Name																
Type																
Reset																
Bit	15	14	13	12	11	10	9	8	7	6	5	4	3	2	1	0
Name	**STR**															
Type	RW															
Reset	0															

Bit(s)	Name	Description
15	STR	**Start control for a DMA channel** This register controls the activity of a DMA channel. Note that prior to setting STR to 1, all the configurations should be done by giving proper value to the registers. Once STR is set to 1, the hardware will not clear it automatically no matter the DMA channel accomplishes the DMA transfer or not. In other words, the value of STR stays at 1 regardless of the completion of the DMA transfer. Therefore, the software program should clear STR to 0 before restarting another DMA transfer. If this bit is cleared to 0 when DMA transfer is active, the software should poll RUNn in DMA_GLBSTA after this bit is cleared to ensure the current DMA transfer is terminated by the DMA engine. 0: The DMA channel is stopped. 1: The DMA channel is started and running.

© 2015 - 2017 MediaTek Inc.

This document contains information that is proprietary to MediaTek Inc. ("MediaTek") and/or its licensor(s).
Any unauthorized use, reproduction or disclosure of this document in whole or in part is strictly prohibited.

A000021C **PDMA2_INTSTA** **DMA channel 2 interrupt status register** **00000000**

Bit	31	30	29	28	27	26	25	24	23	22	21	20	19	18	17	16
Name																
Type																
Reset																
Bit	15	14	13	12	11	10	9	8	7	6	5	4	3	2	1	0
Name	INT															
Type	RO															
Reset	0															

Bit(s)	Name	Description
15	INT	**Interrupt status for DMA channel** 0: No interrupt request is generated. 1: One interrupt request is pending and waiting for service.

A0000220 **PDMA2_ACKINT** **DMA channel 2 interrupt acknowledge register** **00000000**

Bit	31	30	29	28	27	26	25	24	23	22	21	20	19	18	17	16
Name																
Type																
Reset																
Bit	15	14	13	12	11	10	9	8	7	6	5	4	3	2	1	0
Name	ACK															
Type	WO															
Reset	0															

Bit(s)	Name	Description
15	ACK	**Interrupt acknowledge for the DMA channel** 0: No effect 1: Interrupt request is acknowledged and should be relinquished.

A0000224 **PDMA2_RLCT** **DMA channel 2 remaining length of current transfer** **00000000**

Bit	31	30	29	28	27	26	25	24	23	22	21	20	19	18	17	16
Name																
Type																
Reset																
Bit	15	14	13	12	11	10	9	8	7	6	5	4	3	2	1	0
Name	RLCT															
Type	RO															
Reset	0	0	0	0	0	0	0	0	0	0	0	0	0	0	0	0

Bit(s)	Name	Description
15:0	RLCT	**Reflects left count of transfer** Note: This value is transfer count, not the transfer data size.

© 2015 - 2017 MediaTek Inc.

This document contains information that is proprietary to MediaTek Inc. ("MediaTek") and/or its licensor(s).
Any unauthorized use, reproduction or disclosure of this document in whole or in part is strictly prohibited.

A000022C **PDMA2_PGMADDR** **DMA channel 2 programmable address register** **00000000**

Bit	31	30	29	28	27	26	25	24	23	22	21	20	19	18	17	16
Name	PGMADDR[31:16]															
Type	RW															
Reset	0	0	0	0	0	0	0	0	0	0	0	0	0	0	0	0
Bit	15	14	13	12	11	10	9	8	7	6	5	4	3	2	1	0
Name	PGMADDR[15:0]															
Type	RW															
Reset	0	0	0	0	0	0	0	0	0	0	0	0	0	0	0	0

Bit(s)	Name	Description
31:0	PGMADDR	**PDMA programmable address** The above registers specify the address for a half-size DMA channel. This address represents the source address if DIR in DMA_CON is set to 0 and represents the destination address if DIR in PDMAn_CON is set to 1.

4.2.3.2. VDMA (Virtual FIFO DMA) Registers

Only VDMA9 register is listed below. The register contents of other VDMA channels are the same as those of VDMA9, only that the addresses are different. For register addresses, refer to the register summary section.

A0000910 **VDMA9_COUNT** **DMA channel 9 transfer count register** **00000000**

Bit	31	30	29	28	27	26	25	24	23	22	21	20	19	18	17	16
Name																
Type																
Reset																
Bit	15	14	13	12	11	10	9	8	7	6	5	4	3	2	1	0
Name	COUNT															
Type	RW															
Reset	0	0	0	0	0	0	0	0	0	0	0	0	0	0	0	0

Bit(s)	Name	Description
15:0	COUNT	**FIFO threshold** For virtual FIFO DMA, this register is used to configure the RX threshold and TX threshold. The interrupt will be triggered when FIFO count is larger than or equal to RX threshold in RX path or FIFO count is less than or equal to TX threshold in TX path. Note: The ITEN bit in the VDMAn_CON register should be set, or no interrupt will be issued. n is from 1 to 16.

A0000914 **VDMA9_CON** **DMA channel 9 control register** **00000000**

Bit	31	30	29	28	27	26	25	24	23	22	21	20	19	18	17	16
Name														DIR		
Type														RW		
Reset														0		
Bit	15	14	13	12	11	10	9	8	7	6	5	4	3	2	1	0
Name	ITEN											DREQ			SIZE	
Type	RW											RW			RW	
Reset	0											0			0	0

This document contains information that is proprietary to MediaTek Inc. ("MediaTek") and/or its licensor(s).
Any unauthorized use, reproduction or disclosure of this document in whole or in part is strictly prohibited.

Bit(s)	Name	Description
18	DIR	**Directions of PDMA transfer** The direction is from the perspective of the DMA masters. WRITE means reading from master and then writing to the address specified in VDMAn_PGMADDR, and vice versa. No effect on channel 1. 0: Peripheral TX 1: Peripheral RX
15	ITEN	**Enables DMA transfer completion interrupt** 0: Disable 1: Enable
4	DREQ	**Throttle and handshake control for DMA transfer** The DMA master is able to throttle down the transfer rate by request-grant handshake. 0: No throttle control during DMA transfer or transfers occurred only between memories 1: Hardware handshake management
1:0	SIZE	**Data size within the confine of a bus cycle per transfer** These bits confine the data transfer size between the source and destination to the specified value for individual bus cycle. The size is in terms of byte, and the maximum value is 4 bytes. It is mainly decided by the data width of a DMA master. 00: Byte transfer/1 byte 01: Half-word transfer/2 bytes 10: Word transfer/4 bytes 11: Reserved

A0000918 VDMA9_START DMA channel 9 start register 00000000

Bit	31	30	29	28	27	26	25	24	23	22	21	20	19	18	17	16
Name																
Type																
Reset																
Bit	15	14	13	12	11	10	9	8	7	6	5	4	3	2	1	0
Name	**STR**															
Type	RW															
Reset	0															

Bit(s)	Name	Description
15	STR	**Start control for a DMA channel** This register controls the activity of a DMA channel. Note that prior to setting STR to 1, all the configurations should be done by giving proper value to the registers. Once STR is set to 1, the hardware will not clear it automatically no matter the DMA channel accomplishes the DMA transfer or not. In other words, the value of STR stays at 1 regardless of the completion of the DMA transfer. Therefore, the software program should clear STR to 0 before restarting another DMA transfer. If this bit is cleared to 0 when DMA transfer is active, the software should poll RUNn in DMA_GLBSTA after this bit is cleared to ensure the current DMA transfer is terminated by the DMA engine. 0: The DMA channel is stopped. 1: The DMA channel is started and running.

© 2015 - 2017 MediaTek Inc.

This document contains information that is proprietary to MediaTek Inc. (“MediaTek”) and/or its licensor(s).
Any unauthorized use, reproduction or disclosure of this document in whole or in part is strictly prohibited.

A000091C **VDMA9_INTSTA** **DMA channel 9 interrupt status register** **00000000**

Bit	31	30	29	28	27	26	25	24	23	22	21	20	19	18	17	16
Name																
Type																
Reset																
Bit	15	14	13	12	11	10	9	8	7	6	5	4	3	2	1	0
Name	INT															
Type	RW															
Reset	0															

Bit(s)	Name	Description
15	INT	**Interrupt status for DMA channel** 0: No interrupt request is generated. 1: One interrupt request is pending and waiting for service.

A0000920 **VDMA9_ACKINT** **DMA channel 9 interrupt acknowledge register** **00000000**

Bit	31	30	29	28	27	26	25	24	23	22	21	20	19	18	17	16
Name																
Type																
Reset																
Bit	15	14	13	12	11	10	9	8	7	6	5	4	3	2	1	0
Name	ACK															
Type	WO															
Reset	0															

Bit(s)	Name	Description
15	ACK	**Interrupt acknowledge for the DMA channel** 0: No effect 1: Interrupt request is acknowledged and should be relinquished.

A000092C **VDMA9_PGMADDR** **DMA channel 9 programmable address register** **00000000**

Bit	31	30	29	28	27	26	25	24	23	22	21	20	19	18	17	16
Name	PGMADDR[31:16]															
Type	RW															
Reset	0	0	0	0	0	0	0	0	0	0	0	0	0	0	0	0
Bit	15	14	13	12	11	10	9	8	7	6	5	4	3	2	1	0
Name	PGMADDR[15:0]															
Type	RW															
Reset	0	0	0	0	0	0	0	0	0	0	0	0	0	0	0	0

Bit(s)	Name	Description
31:0	PGMADDR	**VDMA programmable address** The above registers specify the address for a half-size DMA channel. This address represents the source address if DIR in DMA_CON is set to 0 and represents the destination address if DIR in VDMAn_CON is set to 1.

© 2015 - 2017 MediaTek Inc.

This document contains information that is proprietary to MediaTek Inc. ("MediaTek") and/or its licensor(s).
Any unauthorized use, reproduction or disclosure of this document in whole or in part is strictly prohibited.

A0000930 VDMA9_WRPTR DMA channel 9 write pointer 00000000

Bit	31	30	29	28	27	26	25	24	23	22	21	20	19	18	17	16
Name	WRPTR[31:16]															
Type	RO															
Reset	0	0	0	0	0	0	0	0	0	0	0	0	0	0	0	0
Bit	15	14	13	12	11	10	9	8	7	6	5	4	3	2	1	0
Name	WRPTR[15:0]															
Type	RO															
Reset	0	0	0	0	0	0	0	0	0	0	0	0	0	0	0	0

Bit(s)	Name	Description
31:0	WRPTR	**Virtual FIFO write pointer**

A0000934 VDMA9_RDPTR DMA channel 9 read pointer 00000000

Bit	31	30	29	28	27	26	25	24	23	22	21	20	19	18	17	16
Name	RDPTR[31:16]															
Type	RO															
Reset	0	0	0	0	0	0	0	0	0	0	0	0	0	0	0	0
Bit	15	14	13	12	11	10	9	8	7	6	5	4	3	2	1	0
Name	RDPTR[15:0]															
Type	RO															
Reset	0	0	0	0	0	0	0	0	0	0	0	0	0	0	0	0

Bit(s)	Name	Description
31:0	RDPTR	**Virtual FIFO read pointer**

A0000938 VDMA9_FFCNT DMA channel 9 FIFO count 00000000

Bit	31	30	29	28	27	26	25	24	23	22	21	20	19	18	17	16
Name																
Type																
Reset																
Bit	15	14	13	12	11	10	9	8	7	6	5	4	3	2	1	0
Name	FFCNT															
Type	RO															
Reset	0	0	0	0	0	0	0	0	0	0	0	0	0	0	0	0

Bit(s)	Name	Description
15:0	FFCNT	**Displays the number of data stored in FIFO** 0 means FIFO is empty; FIFO will be full if FFCNT is equal to FFSIZE.

A000093C VDMA9_FFSTA DMA channel 9 FIFO status 00000000

Bit	31	30	29	28	27	26	25	24	23	22	21	20	19	18	17	16
Name																
Type																
Reset																
Bit	15	14	13	12	11	10	9	8	7	6	5	4	3	2	1	0
Name														ALT	EMPTY	FULL
Type														RO	RO	RO
Reset														0	0	0

© 2015 - 2017 MediaTek Inc.

This document contains information that is proprietary to MediaTek Inc. ("MediaTek") and/or its licensor(s).
Any unauthorized use, reproduction or disclosure of this document in whole or in part is strictly prohibited.

Bit(s)	Name	Description
2	ALT	**Indicates FIFO count is larger than ALTLEN** DMA issues an alert signal to UART/BRIF to enable UART/BRIF flow control. 0: Not reach alert region 1: Reach alert region
1	EMPTY	**Indicates FIFO is empty** 0: Not empty 1: Empty
0	FULL	**Indicates FIFO is full** 0: Not full 1: Full

A0000940 VDMA9_ALTLEN DMA channel 9 alert length 00000000

Bit	31	30	29	28	27	26	25	24	23	22	21	20	19	18	17	16
Name																
Type																
Reset																
Bit	15	14	13	12	11	10	9	8	7	6	5	4	3	2	1	0
Name											ALTLEN					
Type											RW					
Reset											0	0	0	0	0	0

Bit(s)	Name	Description
5:0	ALTLEN	**Specifies alert length of virtual FIFO DMA** Once the remaining FIFO space is less than ALTLEN, an alert signal will be issued to UART/BRIF to enable the flow control. Normally, ALTLEN should be bigger than 16 for UART/BRIF applications.

A0000944 VDMA9_FFSIZE DMA channel 9 FIFO size 00000000

Bit	31	30	29	28	27	26	25	24	23	22	21	20	19	18	17	16
Name																
Type																
Reset																
Bit	15	14	13	12	11	10	9	8	7	6	5	4	3	2	1	0
Name	FFSIZE															
Type	RW															
Reset	0	0	0	0	0	0	0	0	0	0	0	0	0	0	0	0

Bit(s)	Name	Description
15:0	FFSIZE	**Specifies FIFO size of virtual FIFO DMA**

© 2015 - 2017 MediaTek Inc.

This document contains information that is proprietary to MediaTek Inc. (“MediaTek”) and/or its licensor(s).
Any unauthorized use, reproduction or disclosure of this document in whole or in part is strictly prohibited.

5. Real Time Clock

5.1. General Description

The Real-Time Clock (RTC) module provides time and data information, as well as 32,768 kHz clock. The provided 32k clock is selected between three clock sources: one from the external (XOSC32), and two from the internal (DCXO, EOSC32). An additional pin, XOSC32_ENB, is added for the 32k crystal existence information. The clock source is from the external oscillator or from the embedded clock sources, determined by the XOSC32_ENB pin setting. The RTC block has an independent power supply. When the mobile handset is powered off, a dedicated regulator supplies the RTC block. In addition to providing timing data, an alarm interrupt is generated and can be used to power up the baseband core. Regulator interrupts corresponding to seconds, minutes, hours and days can be generated whenever the time counter value reaches a maximum value (e.g., 59 for seconds and minutes, 23 for hours, etc.). The year span is supported up to 2127. The maximum day-of-month values, which depend on the leap year condition, are stored in the RTC block.

5.2. Register Definitions

Module name: RTC Base address: (+A21E0000h)

Address	Name	Width	Register Function
A21E0000	RTC_BBPU	16	**Baseband power up**
A21E0004	RTC_IRQ_STA	16	**RTC IRQ status** This register is fixed atin 0 when RTC_POWERKEY1 & RTC_POWERKEY2 unmatch the correct values.
A21E0008	RTC_IRQ_EN	16	**RTC IRQ enable** This register is fixed atin 0 when RTC_POWERKEY1 & RTC_POWERKEY2 unmatch the correct values.
A21E000C	RTC_CII_EN	16	**Counter increment IRQ enable** This register activates or de-activates the IRQ generation when the TC counter reaches its maximum value.
A21E0010	RTC_AL_MASK	16	**RTC alarm mask** The alarm condition for alarm IRQ generation depends on whether or not the corresponding bit in this register is masked. Warning: If you set all bits to 1 in RTC_AL_MASK (i.e. RTC_AL_MASK=0x7f) and PWREN=1 in RTC_BBPU, it means alarm will comes every secondEVERY SECOND, not disabled.
A21E0014	RTC_TC_SEC	16	**RTC seconds time counter register**
A21E0018	RTC_TC_MIN	16	**RTC minutes time counter register**
A21E001C	RTC_TC_HOU	16	**RTC hours time counter register**
A21E0020	RTC_TC_DOM	16	**RTC day-of-month time counter register**
A21E0024	RTC_TC_DOW	16	**RTC day-of-week time counter register**
A21E0028	RTC_TC_MTH	16	**RTC month time counter register**
A21E002C	RTC_TC_YEA	16	**RTC year time counter register**
A21E0030	RTC_AL_SEC	16	**RTC second alarm setting register**

© 2015 - 2017 MediaTek Inc.

This document contains information that is proprietary to MediaTek Inc. ("MediaTek") and/or its licensor(s).
Any unauthorized use, reproduction or disclosure of this document in whole or in part is strictly prohibited.

Module name: RTC Base address: (+A21E0000h)

A21E0034	**RTC_AL_MIN**	16	**RTC minute alarm setting register**
A21E0038	**RTC_AL_HOU**	16	**RTC hour alarm setting register**
A21E003C	**RTC_AL_DOM**	16	**RTC day-of-month alarm setting register**
A21E0040	**RTC_AL_DOW**	16	**RTC day-of-week alarm setting register**
A21E0044	**RTC_AL_MTH**	16	**RTC month alarm setting register**
A21E0048	**RTC_AL_YEA**	16	**RTC year alarm setting register**
A21E0050	**RTC_POWER KEY1**	16	**RTC_POWERKEY1 register**
A21E0054	**RTC_POWER KEY2**	16	**RTC_POWERKEY2 register**
A21E0058	**RTC_PDN1**	16	**PDN1**
A21E005C	**RTC_PDN2**	16	**PDN2**
A21E0060	**RTC_SPAR0**	16	**Spare register for specific purpose**
A21E0064	**RTC_SPAR1**	16	**Spare register for specific purpose**
A21E0068	**RTC_PROT**	16	**Lock/unlock scheme to prevent RTC miswriting**
A21E006C	**RTC_DIFF**	16	**One-time calibration offset** This register is fixed atin 0 when RTC_POWERKEY1 & RTC_POWERKEY2 unmatch the correct values.
A21E0070	**RTC_CALI**	16	**Repeat calibration offset** This register is fixed atin 0 when RTC_POWERKEY1 & RTC_POWERKEY2 unmatch the correct values.
A21E0074	**RTC_WRTGR**	16	**Enable the transfers from core to RTC in the queue**

A21E0000 **RTC_BBPU** **Baseband power up** **0000**

Bit	15	14	13	12	11	10	9	8	7	6	5	4	3	2	1	0
Name	**KEY_BBPU**									**CBUSY**	**RELOAD**			**ALARM_PU**		**PWREN**
Type	WO									RO	WO			RW		RW
Reset	0	0	0	0	0	0	0	0		0	0			0		0

Overview

Bit(s)	Name	Description
15:8	KEY_BBPU	**A bus write is acceptable only when KEY_BBPU is correct.**
6	CBUSY	**The read/write channels between RTC / Core is busy. This bit indicates high after software program sequence to anyone of RTC data registers and enables the transfer by RTC_WRTGR=1. By thise way, it will beis high after the reset from low to high because RTC reloads the process.**
5	RELOAD	**Reloads the values from RTC domain to Ccore domain. Generally speaking, RTC will reload to synchronize the data from RTC to core when reset from 0 to 1. This bit can be treated as a debug bit.**

© 2015 - 2017 MediaTek Inc.

This document contains information that is proprietary to MediaTek Inc. ("MediaTek") and/or its licensor(s).
Any unauthorized use, reproduction or disclosure of this document in whole or in part is strictly prohibited.

Bit(s)	Name	Description
2	ALARM_PU	**Indicates whether or not PMU is powered on by alarm.** 0: No alarm occurred; the alarm condition has not been met. 1: Alarm occurred. Write 1 to clear this bit.
0	PWREN	0: RTC alarm has no action on power switch. 1: When an RTC alarm occurs, ALARM_PU will beis set to 1 and the system will be powereds on by RTC alarm wakeup.

A21E0004 **RTC_IRQ_STA** **RTC IRQ status** **0000**

Bit	15	14	13	12	11	10	9	8	7	6	5	4	3	2	1	0
Name													LPSTA		TCSTA	ALSTA
Type													RO		RC	RC
Reset													0		0	0

Overview **This register is fixed in 0 when RTC_POWERKEY1 & RTC_POWERKEY2 unmatch the correct values.**

Bit(s)	Name	Description
3	LPSTA	**This register iIndicates the IRQ status and whether or not the LPD is asserteds.** 0: No IRQ occurred; the 32K clock is good. 1: IRQ occurred; the 32K clock stopped or stops. This can be masked by LP_EN or cleared by initializinge LPD.
1	TCSTA	**This register iIndicates the IRQ status and whether or not the tick condition has been met.** 0: No IRQ occurred; the tick condition has not been met. 1: IRQ occurred; the tick condition has been met.
0	ALSTA	**This register iIndicates the IRQ status and whether or not the alarm condition has been met.** 0: No IRQ occurred; the alarm condition has not been met. 1: IRQ occurred; the alarm condition has been met.

A21E0008 **RTC_IRQ_EN** **RTC IRQ enable** **0000**

Bit	15	14	13	12	11	10	9	8	7	6	5	4	3	2	1	0
Name													LP_EN	ONESHOT	TC_EN	AL_EN
Type													RW	RW	RW	RW
Reset													0	0	0	0

Overview **This register is fixed atin 0 when RTC_POWERKEY1 & RTC_POWERKEY2 unmatch the correct values.**

Bit(s)	Name	Description
3	LP_EN	**This register eEnables the control bit for IRQ generation if the Llow power is detected (32k clock off).** 0: Disable IRQ generations. 1: Enable the LPD.
2	ONESHOT	**Controls automatic reset of AL_EN and TC_EN.**
1	TC_EN	**This register eEnables the control bit for IRQ generation if the tick condition has been met.**

© 2015 - 2017 MediaTek Inc.

This document contains information that is proprietary to MediaTek Inc. ("MediaTek") and/or its licensor(s).
Any unauthorized use, reproduction or disclosure of this document in whole or in part is strictly prohibited.

Bit(s)	Name	Description
0	AL_EN	0: Disable IRQ generations. 1: Enable the tick time match interrupt. Clear the interrupt when ONESHOT is high upon generation of the corresponding IRQ. **This register eEnables the control bit for IRQ generation if the alarm condition has been met.** 0: Disable IRQ generations. 1: Enable the alarm time match interrupt. Clear the interrupt when ONESHOT is high upon generation of the corresponding IRQ.

A21E000C **RTC_CII_EN** **Counter increment IRQ enable** **0000**

Bit	15	14	13	12	11	10	9	8	7	6	5	4	3	2	1	0
Name							SECCII_1_8	SECCII_1_4	SECCII_1_2	YEACII	MTHCII	DOWCII	DOMCII	HOUCII	MINCII	SECCII
Type							RW	RW	RW	RW	RW	RW	RW	RW	RW	RW
Reset							0	0	0	0	0	0	0	0	0	0

Overview **This register activates or de-activates the IRQ generation when the TC counter reaches its maximum value.**

Bit(s)	Name	Description
9	SECCII_1_8	**Set the bit to 1 to activate the IRQ at each one-eighth of a second update.**
8	SECCII_1_4	**Set the bit to 1 to activate the IRQ at each one-fourth of a second update.**
7	SECCII_1_2	**Set the bit to 1 to activate the IRQ at each one-half of a second update.**
6	YEACII	**Set the bit to 1 to activate the IRQ at each year update.**
5	MTHCII	**Set the bit to 1 to activate the IRQ at each month update.**
4	DOWCII	**Set the bit to 1 to activate the IRQ at each day-of-week update.**
3	DOMCII	**Set the bit to 1 to activate the IRQ at each day-of-month update.**
2	HOUCII	**Set the bit to 1 to activate the IRQ at each hour update.**
1	MINCII	**Set the bit to 1 to activate the IRQ at each minute update.**
0	SECCII	**Set this bit to 1 to activate the IRQ at each second update.**

A21E0010 **RTC_AL_MASK** **RTC alarm mask** **0000**

Bit	15	14	13	12	11	10	9	8	7	6	5	4	3	2	1	0
Name										YEA_MSK	MTH_MSK	DOW_MSK	DOM_MSK	HOU_MSK	MIN_MSK	SEC_MSK
Type										RW	RW	RW	RW	RW	RW	RW
Reset										0	0	0	0	0	0	0

Overview **The alarm condition for alarm IRQ generation depends on whether or not the corresponding bit in this register is masked. Warning: If you set all bits to 1 in RTC_AL_MASK (i.e. RTC_AL_MASK=0x7f) and PWREN=1 in RTC_BBPU, it means alarm will comes every second EVERY SECOND, not disabled.**

Bit(s)	Name	Description
6	YEA_MSK	0: Condition (RTC_TC_YEA = RTC_AL_YEA) is checked to generate the alarm signal. 1: Condition (RTC_TC_YEA = RTC_AL_YEA) is masked, i.e. the value of

This document contains information that is proprietary to MediaTek Inc. ("MediaTek") and/or its licensor(s).
Any unauthorized use, reproduction or disclosure of this document in whole or in part is strictly prohibited.

Bit(s)	Name	Description
		RTC_TC_YEA does not affect the alarm IRQ generation.
5	MTH_MSK	0: Condition (RTC_TC_MTH = RTC_AL_MTH) is checked to generate the alarm signal. 1: Condition (RTC_TC_MTH = RTC_AL_MTH) is masked, i.e. the value of RTC_TC_MTH does not affect the alarm IRQ generation.
4	DOW_MSK	0: Condition (RTC_TC_DOW = RTC_AL_DOW) is checked to generate the alarm signal. 1: Condition (RTC_TC_DOW = RTC_AL_DOW) is masked, i.e. the value of RTC_TC_DOW does not affect the alarm IRQ generation.
3	DOM_MSK	0: Condition (RTC_TC_DOM = RTC_AL_DOM) is checked to generate the alarm signal. 1: Condition (RTC_TC_DOM = RTC_AL_DOM) is masked, i.e. the value of RTC_TC_DOM does not affect the alarm IRQ generation.
2	HOU_MSK	0: Condition (RTC_TC_HOU = RTC_AL_HOU) is checked to generate the alarm signal. 1: Condition (RTC_TC_HOU = RTC_AL_HOU) is masked, i.e. the value of RTC_TC_HOU does not affect the alarm IRQ generation.
1	MIN_MSK	0: Condition (RTC_TC_MIN = RTC_AL_MIN) is checked to generate the alarm signal. 1: Condition (RTC_TC_MIN = RTC_AL_MIN) is masked, i.e. the value of RTC_TC_MIN does not affect the alarm IRQ generation.
0	SEC_MSK	0: Condition (RTC_TC_SEC = RTC_AL_SEC) is checked to generate the alarm signal. 1: Condition (RTC_TC_SEC = RTC_AL_SEC) is masked, i.e. the value of RTC_TC_SEC does not affect the alarm IRQ generation.

A21E0014 RTC_TC_SEC RTC seconds time counter register 0000

Bit	15	14	13	12	11	10	9	8	7	6	5	4	3	2	1	0
Name											TC_SECOND					
Type											RW					
Reset											0	0	0	0	0	0

Overview

Bit(s)	Name	Description
5:0	TC_SECOND	**The second initial value for the time counter. The rRange: of its value is: 0-~59.**

A21E0018 RTC_TC_MIN RTC minutes time counter register 0000

Bit	15	14	13	12	11	10	9	8	7	6	5	4	3	2	1	0
Name											TC_MINUTE					
Type											RW					
Reset											0	0	0	0	0	0

Overview

Bit(s)	Name	Description
5:0	TC_MINUTE	**The minute initial value for the time counter. The rRange: of its value is: 0~-59.**

© 2015 - 2017 MediaTek Inc.

This document contains information that is proprietary to MediaTek Inc. ("MediaTek") and/or its licensor(s).
Any unauthorized use, reproduction or disclosure of this document in whole or in part is strictly prohibited.

A21E001C **RTC_TC_HOU** **RTC hours time counter register** **0000**

Bit	15	14	13	12	11	10	9	8	7	6	5	4	3	2	1	0
Name												TC_HOUR				
Type												RW				
Reset												0	0	0	0	0

Overview

Bit(s)	Name	Description
4:0	TC_HOUR	**The hour initial value for the time counter. The rRange: of its value is: 0-~23.**

A21E0020 **RTC_TC_DOM** **RTC day-of-month time counter register** **0000**

Bit	15	14	13	12	11	10	9	8	7	6	5	4	3	2	1	0
Name												TC_DOM				
Type												RW				
Reset												0	0	0	0	0

Overview

Bit(s)	Name	Description
4:0	TC_DOM	**The day-of-month initial value for the time counter. The day-of-month maximum value depends on the leap year condition, i.e. 2 LSB of year time counter are 0zeros.**

A21E0024 **RTC_TC_DOW** **RTC day-of-week time counter register** **0000**

Bit	15	14	13	12	11	10	9	8	7	6	5	4	3	2	1	0
Name														TC_DOW		
Type														RW		
Reset														0	0	0

Overview

Bit(s)	Name	Description
2:0	TC_DOW	**The day-of-week initial value for the time counter. The rRange: of its value is: 1-~7.**

A21E0028 **RTC_TC_MTH** **RTC month time counter register** **0000**

Bit	15	14	13	12	11	10	9	8	7	6	5	4	3	2	1	0
Name													TC_MONTH			
Type													RW			
Reset													0	0	0	0

Overview

Bit(s)	Name	Description
3:0	TC_MONTH	**The month initial value for the time counter. The rRange: of its value is: 1-~12.**

© 2015 - 2017 MediaTek Inc.

This document contains information that is proprietary to MediaTek Inc. ("MediaTek") and/or its licensor(s).
Any unauthorized use, reproduction or disclosure of this document in whole or in part is strictly prohibited.

A21E002C **RTC_TC_YEA** **RTC year time counter register** **0000**

Bit	15	14	13	12	11	10	9	8	7	6	5	4	3	2	1	0
Name										TC_YEAR						
Type										RW						
Reset										0	0	0	0	0	0	0

Overview

Bit(s)	Name	Description
6:0	TC_YEAR	**The year initial value for the time counter. The rRange: of its value is: 0-127. (2000-2127).** Software can bias the year as multiples of 4 for the internal leap-year formula. Here are 3 examples: 2000-2127, 1972~2099, 1904~2031.To simplify, RTC hardware treats all 4-multiple as leap years. If the range you defined includes non-leap 4-multiple year (e.g.say: 2100), you have to adjust it to the correct date by yourselves. (e.g.x: change Feb. 29th, 2100 to Mar. 1st, 2100). It's suggested to bias the range large than 1900 and less thean 2100 to evade the manual adjustment, i.e.ing. I.e.: the bias values are suggested to be in the range of [-28,-96], that are (1972~ 2099) ~ (1904~ 2031). The formal leap formula: if year modulo 400 is 0 then leap else if year modulo 100 is 0 then no_leap else if year modulo 4 is 0 then leap else no_leap

A21E0030 **RTC_AL_SEC** **RTC second alarm setting register** **0000**

Bit	15	14	13	12	11	10	9	8	7	6	5	4	3	2	1	0
Name			RTC_LPD_OPT								AL_SECOND					
Type			RW								RW					
Reset			0	0							0	0	0	0	0	0

Overview

Bit(s)	Name	Description
13:12	RTC_LPD_OPT	**LPD option** 00: XOSC LPD | EOSC LPD (triggers when clock stops or VRTC low-V) 01: EOSC LPD (triggers when VRTC low-V) 10: XOSC LPD (triggers when clock stops) 11: nNo LPD
5:0	AL_SECOND	**The second value of the alarm counter setting. The rRange: of its value is: 0-59.**

A21E0034 **RTC_AL_MIN** **RTC minute alarm setting register** **0000**

Bit	15	14	13	12	11	10	9	8	7	6	5	4	3	2	1	0
Name											AL_MINUTE					
Type											RW					
Reset											0	0	0	0	0	0

Overview

Bit(s)	Name	Description
5:0	AL_MINUTE	**The minute value of the alarm counter setting. The rRange: of its value is: 0-59.**

© 2015 - 2017 MediaTek Inc.

This document contains information that is proprietary to MediaTek Inc. ("MediaTek") and/or its licensor(s).
Any unauthorized use, reproduction or disclosure of this document in whole or in part is strictly prohibited.

A21E0038 RTC_AL_HOU RTC hour alarm setting register 0000

Bit	15	14	13	12	11	10	9	8	7	6	5	4	3	2	1	0
Name	NEW_SPARE0											AL_HOUR				
Type	RW											RW				
Reset	0	0	0	0	0	0	0	0				0	0	0	0	0

Overview

Bit(s)	Name	Description
15:8	NEW_SPARE0	**The registers are rReserved for specific purposes.**
4:0	AL_HOUR	**The hour value of the alarm counter setting. The rRange: of its value is: 0-~23.**

A21E003C RTC_AL_DOM RTC day-of-month alarm setting register 0000

Bit	15	14	13	12	11	10	9	8	7	6	5	4	3	2	1	0
Name	NEW_SPARE1											AL_DOM				
Type	RW											RW				
Reset	0	0	0	0	0	0	0	0				0	0	0	0	0

Overview

Bit(s)	Name	Description
15:8	NEW_SPARE1	**The registers are rReserved for specific purposes.**
4:0	AL_DOM	**The day-of-month value of the alarm counter setting. The day-of-month maximum value depends on the leap year condition, i.e. 2 LSB of year time counter are zeros 0.**

A21E0040 RTC_AL_DOW RTC day-of-week alarm setting register 0000

Bit	15	14	13	12	11	10	9	8	7	6	5	4	3	2	1	0
Name	NEW_SPARE2													AL_DOW		
Type	RW													RW		
Reset	0	0	0	0	0	0	0	0						0	0	0

Overview

Bit(s)	Name	Description
15:8	NEW_SPARE2	**The registers are rReserved for specific purposes.**
2:0	AL_DOW	**The day-of-week value of the alarm counter setting. The rRange: of its value is: 1-~7.**

A21E0044 RTC_AL_MTH RTC month alarm setting register 0000

Bit	15	14	13	12	11	10	9	8	7	6	5	4	3	2	1	0
Name	NEW_SPARE3												AL_MONTH			
Type	RW												RW			
Reset	0	0	0	0	0	0	0	0					0	0	0	0

Overview

Bit(s)	Name	Description
15:8	NEW_SPARE3	**The registers are rReserved for specific purposes.**
3:0	AL_MONTH	**The month value of the alarm counter setting. The rRange: of its**

© 2015 - 2017 MediaTek Inc.

This document contains information that is proprietary to MediaTek Inc. ("MediaTek") and/or its licensor(s).
Any unauthorized use, reproduction or disclosure of this document in whole or in part is strictly prohibited.

Bit(s)	Name	Description
		value is: 1-~12.

A21E0048 **RTC_AL_YEA** **RTC year alarm setting register** **0000**

Bit	15	14	13	12	11	10	9	8	7	6	5	4	3	2	1	0
Name	NEW_SPARE4									AL_YEAR						
Type	RW									RW						
Reset	0	0	0	0	0	0	0	0		0	0	0	0	0	0	0

Overview

Bit(s)	Name	Description
15:8	NEW_SPARE4	The registers are rReserved for specific purposes.
6:0	AL_YEAR	The year value of the alarm counter setting. The rRange: of its value is: 0-~127. (2000-2127)

A21E0050 **RTC_POWERKEY1** **RTC_POWERKEY1 register** **0000**

Bit	15	14	13	12	11	10	9	8	7	6	5	4	3	2	1	0
Name	RTC_POWERKEY1															
Type	RW															
Reset	0	0	0	0	0	0	0	0	0	0	0	0	0	0	0	0

Overview

Bit(s)	Name	Description
15:0	RTC_POWERKEY1	The RTC content is protected by RTC_POWERKEY1 and RTC_POWRKEY2. When RTC_POWERKEY1 & RTC_POWERKEY2 are not equal to the correct values, the RTC content is not credibleis.

A21E0054 **RTC_POWERKEY2** **RTC_POWERKEY2 register** **0000**

Bit	15	14	13	12	11	10	9	8	7	6	5	4	3	2	1	0
Name	RTC_POWERKEY2															
Type	RW															
Reset	0	0	0	0	0	0	0	0	0	0	0	0	0	0	0	0

Overview

Bit(s)	Name	Description
15:0	RTC_POWERKEY2	The RTC content is protected by RTC_POWERKEY1 and RTC_POWRKEY2. When RTC_POWERKEY1 & RTC_POWERKEY2 are not equal to the correct values, the RTC content is not credibleis.

A21E0058 **RTC_PDN1** **PDN1** **0000**

Bit	15	14	13	12	11	10	9	8	7	6	5	4	3	2	1	0
Name	RTC_PDN1															
Type	RW															
Reset	0	0	0	0	0	0	0	0	0	0	0	0	0	0	0	0

© 2015 - 2017 MediaTek Inc.

This document contains information that is proprietary to MediaTek Inc. ("MediaTek") and/or its licensor(s).
Any unauthorized use, reproduction or disclosure of this document in whole or in part is strictly prohibited.

Overview

Bit(s)	Name	Description
15:0	RTC_PDN1	**The sSpare registers for software to keep the power -on and power -off state information.**

A21E005C **RTC_PDN2** **PDN2** **0000**

Bit	15	14	13	12	11	10	9	8	7	6	5	4	3	2	1	0
Name	RTC_PDN2															
Type	RW															
Reset	0	0	0	0	0	0	0	0	0	0	0	0	0	0	0	0

Overview

Bit(s)	Name	Description
15:0	RTC_PDN2	**The sSpare registers for software to keep the power power-on and power power-off state information.**

A21E0060 **RTC_SPAR0** **Spare register for specific purpose** **0000**

Bit	15	14	13	12	11	10	9	8	7	6	5	4	3	2	1	0
Name	RTC_SPAR0															
Type	RW															
Reset	0	0	0	0	0	0	0	0	0	0	0	0	0	0	0	0

Overview

Bit(s)	Name	Description
15:0	RTC_SPAR0	**The registers are rReserved for specific purposes.**

A21E0064 **RTC_SPAR1** **Spare register for specific purpose** **0000**

Bit	15	14	13	12	11	10	9	8	7	6	5	4	3	2	1	0
Name	RTC_SPAR1															
Type	RW															
Reset	0	0	0	0	0	0	0	0	0	0	0	0	0	0	0	0

Overview

Bit(s)	Name	Description
15:0	RTC_SPAR1	**The registers are rReserved for specific purposes.**

A21E0068 **RTC_PROT** **Lock/unlock scheme to prevent RTC miswriting** **0000**

Bit	15	14	13	12	11	10	9	8	7	6	5	4	3	2	1	0
Name	RTC_PROT															
Type	RW															
Reset	0	0	0	0	0	0	0	0	0	0	0	0	0	0	0	0

Overview

Bit(s)	Name	Description
15:0	RTC_PROT	**The RTC write interface is protected by RTC_PROT. Whether the RTC writing interface is enabled or not is decided by RTC_PROT contents.**

© 2015 - 2017 MediaTek Inc.

This document contains information that is proprietary to MediaTek Inc. ("MediaTek") and/or its licensor(s).
Any unauthorized use, reproduction or disclosure of this document in whole or in part is strictly prohibited.

Bit(s)	Name	Description
		When RTC_POWERKEY1 & RTC_POWERKEY2 are not equal to the correct values, the RTC writing interface willis always be enabled. But when they match, users have to perform Uunlock flow to enable the writing interface. Notice: Please aAlways keep RTC in the unlock state in power -on mode. Once the normal RTC content writing is completed, do notDO NOT modify the RTC_PROT content to lock the RTC. The RTC_PROT contents will be cleared automatically when powered off immediately.

A21E006C **RTC_DIFF** **One-time calibration offset** **0000**

Bit	15	14	13	12	11	10	9	8	7	6	5	4	3	2	1	0
Name	CALI_RD_SEL			POWER_DETECTED	RTC_DIFF											
Type	RW			RO	RW											
Reset	0			-	0	0	0	0	0	0	0	0	0	0	0	0

Overview **This register is fixed atin 0 when RTC_POWERKEY1 & RTC_POWERKEY2 unmatch the correct values.**

Bit(s)	Name	Description
15	CALI_RD_SEL	**Selects which RTC_CALI is to be read when reading RTC_CALI register** 0: nNormal RTC_CALI 1: K_EOSC32_RTC_CALI
12	POWER_DETECTED	**POWER_DETECTED status** 0: powerkey not match 1: RTC_POWERKEY1, RTC_POWERKEY2, RTC_POWERKEY1_NEW, and RTC_POWERKEY2_NEW match the correct value.
11:0	RTC_DIFF	**These registers are used to aAdjusts the internal counter of RTC. It eaffects once and returns to 0zero when in done.** In some cases, you observe the RTC is faster or slower than the standard. To cChanginge RTC_TC_SEC is coarse and may cause alarm problems. RTC_DIFF provides a finer time unit. An internal 15-bit counter accumulates in each 32768-HZz clock. Entering a non-zero value into the RTC_DIFF will causes the internal RTC counter to increases or decreases RTC_DIFF when RTC_DIFF changes to 0zero again. RTC_DIFF is in represents as 2's completement form. For example, if you fill in 0xfff into RTC_DIFF, the internal counter will decreases 1 when RTC_DIFF returns to 0zero. In other words, you can only use RTC_DIFF continuously if RTC_DIFF is equal to 0zero now. Note: RTC_DIFF ranges from 0x800 (-2048) to 0x7fd (2045). Using 0x7ff and & 0x7fe is not allowed.are forbid to use.

A21E0070 **RTC_CALI** **Repeat calibration offset** **0000**

Bit	15	14	13	12	11	10	9	8	7	6	5	4	3	2	1	0
Name	K_EO	CALI_	RTC_CALI													

© 2015 - 2017 MediaTek Inc.

This document contains information that is proprietary to MediaTek Inc. (“MediaTek”) and/or its licensor(s).
Any unauthorized use, reproduction or disclosure of this document in whole or in part is strictly prohibited.

A21E0070 **RTC_CALI** **Repeat calibration offset** **0000**

	SC32_OVERFLOW	WR_SEL														
Type	RW	RW	RW													
Reset	0	0	0	0	0	0	0	0	0	0	0	0	0	0	0	0

Overview **This register is fixed atin 0 when RTC_POWERKEY1 & RTC_POWERKEY2 unmatch the correct values.**

Bit(s)	Name	Description
15	K_EOSC32_OVERFLOW	**EOSC32 calibration overflow (EOSC32 RTC_CALI update result from PMU rtc_eosc_cali module overflow)** 0: nNot overflow 1: oOverflow
14	CALI_WR_SEL	**Enables EOSC32 Cali value write enable.** Only takes effect oin RTC_CALI write operation. 0: nNormal RTC_CALI 1: K_EOSC32_RTC_CALI
13:0	RTC_CALI	**These registers provide a repeat calibration scheme. RTC_CALI provides two types2 kinds of calibration.** 1. 14-bit calibration capability in 8-second duration; in other words, 12-bit calibration capability in each second. RTC_CALI is in represents in 2's complement form, such that you can adjust RTC increasing or decreasing. Due to that RTC_CALI is revealed in 8 seconds, the resolution is less than a 1/32768 clock. Avg. resolution: 1/32768/8=3.81us Avg. adjust range: -31.25~31.246ms/sec in 2's complement: -0x2000~0x1fff (-8192~8191) 2. 14-bit calibration capability in 1-second duration when use EOSC32 as 32K source (K_EOSC32_RTC_CALI); This typekind of usage is with resolution 1/32768=30.52us

A21E0074 **RTC_WRTGR** **Enable the transfers from core to RTC in the queue** **0000**

Bit	15	14	13	12	11	10	9	8	7	6	5	4	3	2	1	0
Name																WRTGR
Type																WO
Reset																0

Overview

Bit(s)	Name	Description
0	WRTGR	**This register eEnables the transfers from core to RTC. After you modify all the RTC registers you are'd like to change, you must write RTC_WRTGR to 1 to trigger the transfer. The prior writing operations are queued at core power domain. The pending data will not be transferred to RTC domain until WRTGR=1.** After WRTGR=1, the pending data will beis transferred to RTC domain sequentially in order of register address, from low to high. For example: RTC_BBPU -> RTC_IRQ_EN -> RTC_CII_EN -> RTC_AL_MASK -> RTC_TC_SEC -> etc. The CBUSY in RTC_BBPU is equal to 1 in writing process. You can observe CBUSY to determine when the transmission is completeds.

© 2015 - 2017 MediaTek Inc.

This document contains information that is proprietary to MediaTek Inc. (“MediaTek”) and/or its licensor(s).
Any unauthorized use, reproduction or disclosure of this document in whole or in part is strictly prohibited.

6. Universal Asynchronous Receiver Transmitter

6.1. General Description

The baseband chipset houses four UARTs. UARTs provide full duplex serial communication channels between the baseband chipset and external devices.

UART has both M16C450 and M16550A modes of operation, which are compatible with a range of standard software drivers. The extensions are designed to be broadly software compatible with 16550A variants, but certain areas offer no consensus.

In common with M16550A, the UART supports word lengths from 5 to 8 bits, an optional parity bit and one or two stop bits and is fully programmable by an 8-bit CPU interface. A 16-bit programmable baud rate generator and an 8-bit scratch register are included, together with separate transmit and receive FIFOs. Two modem control lines and a diagnostic loop-back mode are provided. UART also includes two DMA handshake lines, indicating when the FIFOs are ready to transfer data to the CPU.

Note that UART is designed so that all internal operation is synchronized by the CLK signal. This synchronization results in minor timing differences between the UART and industry standard 16550A device, which means that the core is not clock for clock identical to the original device.

After hardware reset, UART will be in M16C450 mode; its FIFOs can then be enabled and UART can enter M16550A mode. UART has further additional functions beyond the M16550A mode. Each of the extended functions can be selected individually under software control.

UART provides more powerful enhancements than the industry-standard 16550:

Hardware flow control

This feature is very useful when the ISR latency is hard to predict and control in embedded applications. The MCU is relieved of having to fetch the received data within a fixed amount of time.

Note that in order to enable the enhancements (hardware flow control), the enhanced mode bit, EFR[4], must be set. If EFR[4] is not set, IER[7:4], FCR[5:4], cannot be written and MCR[7] cannot be read. The enhanced mode bit ensures that UART is backward compatible with the software that has been written for 16C450 and 16550A devices.

6.1.1. Features

- Provides four channels
- DMA, polling or interrupt operation
- Supports word lengths from five to eignt bits, with an optional parity bit and one or two stop bits
- Two UART ports for hardware automatic flow control (UART0, UART1)
- Supports baud rates from 110bps up to 921,600bps
- Baud rate auto detection from 110bps up to 115,200bps

© 2015 - 2017 MediaTek Inc.

This document contains information that is proprietary to MediaTek Inc. (“MediaTek”) and/or its licensor(s).
Any unauthorized use, reproduction or disclosure of this document in whole or in part is strictly prohibited.

6.1.2. Block Diagram

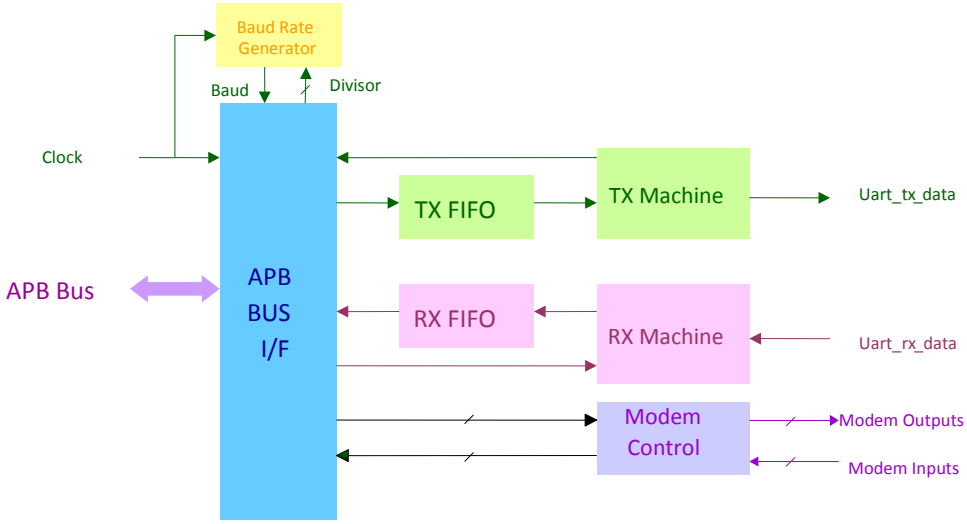

Figure 6-1. Block Diagram of UART

6.1.3. Programming Guide

6.1.3.1. UART Band Rate Setting

UART baud rate = UART clock frequency/HIGHSPEED/{DLM, DLL}

UART clock frequency = 26MHz

HIGHSPEED = 16/8/4/(sampe_count+1)

DLM = User setting

DLL = User setting

Example 1:

Setting UART baud rate = 921600

RATEFIX_AD = 0x00 > UART clock frequency is set to “26MHz”

HIGHSPEED = 0x02 > HIGHSPEED is set to “4”

DLM = 0x0 > DLM is set to “0”

DLL = 0x7 > DLM is set to “7”

UART baud rate 26MHz/4/7 ≒ 921600Hz

© 2015 - 2017 MediaTek Inc.

This document contains information that is proprietary to MediaTek Inc. (“MediaTek”) and/or its licensor(s).
Any unauthorized use, reproduction or disclosure of this document in whole or in part is strictly prohibited.

Example 2:

Setting UART baud rate = 115200

RATEFIX_AD = 0x05 > UART clock frequency is set to “13MHz”

HIGHSPEED = 0x03 > HIGHSPEED is set to “Sample Count”

SAMPLE_COUNT = 0xD > Sample count is set to “13”

DLM = 0x0 > DLM is set to “0”

DLL = 0x7 > DLM is set to “8”

UART baud rate 13MHz/(13+1)/8 ≒ 115200Hz

Note: You can increase (+1) the sample count of each bit of data by register FRACDIV_M and FRACDIV_L.

For example, to set bit 0, 4 and 8 of data to having a bigger sample count:

SAMPLE_COUNT = 0xD

FRACDIV_M = 0x1

FRACDIV_L = 0x11

Data	Bit 8	Bit 7	Bit 6	Bit 5	Bit 4	Bit 3	Bit 2	Bit 1	Bit 0
sample count	14	13	13	13	14	13	13	13	14

The feature can make UART receive/transmit data more accurately.

6.1.3.2. Automatic Baud Rate Detection Setting

This feature can auto detect RX data baud rate without setting up UART baud rate.

1. AUTOBAUD_EN = |0x1: Enable auto-baud feature with standard baud rate

(standard baud rate: 115200, 57600, 38400, 19200, 9600, 4800, 1200, 300, 110 bits/sec)

AUTOBAUD_EN = |0x3: Enable auto-baud feature without standard baud rate (range from 115200 to 110 bits/sec)

2. AUTOBAUD_RATE_FIX: autobaud feature sample clock 26/13MHz

3. AUTOBAUDSAMPLE = 0d13: For autobaud feature sample clock = 26MHz

AUTOBAUDSAMPLE = 0d6: For autobaud feature sample clock = 13MHz

6.1.3.3. HW Flow Control Setting

This feature controls UART start/stop transmission by RTS/CTS signal.

1. EFR = |0xC0: Enable RTS/CTS for hardware transmission/reception flow control

2. MCR = |0x2: RTS output can be controlled by flow control condition.

© 2015 - 2017 MediaTek Inc.

This document contains information that is proprietary to MediaTek Inc. (“MediaTek”) and/or its licensor(s).
Any unauthorized use, reproduction or disclosure of this document in whole or in part is strictly prohibited.

6.1.3.4. SW Flow Control Setting

This feature controls UART start/stop transmission by transmitting/receiving specific data.

1.

EFR[3:0]	Function
00xx	No TX flow control
xx00	No RX flow control
10xx	Transmit XON1/XOFF1 as flow control bytes
xx10	Receive XON1/XOFF1 as flow control bytes

2. XON1: User setting

3. XOFF1: User setting

4. ESCAPE_en: 0x01

5. ESCAPE_DAT: User setting

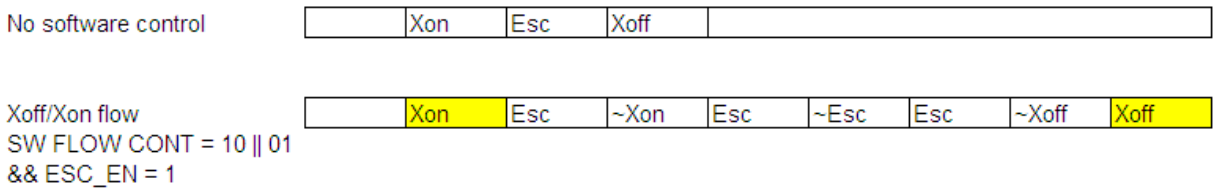

When SW flow control is enabled, and you are to transmit special character (ESC, XON, XOFF), set ESCAPE_en = 1. When UART device receives two data (ESC & ~ special character), it can recognize the ESC command and store the special character as a data.

Example:

UART TX transmit > ESC(command), ~XON – UART RX receive > XON(data)

UART TX transmit > ESC(command), ~XOFF – UART RX receive > XOFF(data)

UART TX transmit > ESC(command), ~ESC – UART RX receive > ESC(data)

6.1.3.5. Enable Sleep Mode

This feature gives feedback sleep_ack signal for system having sleep requirement.

1. SLEEP_ACK_SEL = 0: Support sleep_ack when autobaud_en is opened.

SLEEP_ACK_SEL = 1: Does not support sleep_ack when autobaud_en is opened.

2. SLEEP_EN = 1

© 2015 - 2017 MediaTek Inc.

This document contains information that is proprietary to MediaTek Inc. ("MediaTek") and/or its licensor(s).
Any unauthorized use, reproduction or disclosure of this document in whole or in part is strictly prohibited.

6.2. Register Definition

There are four UARTs in this SOC. The usage of the registers below is the same except that the base address should be changed to respective one.

UART number	Base address	Feature
UART0	0xA00D0000	Supports DMA, HW flow control
UART1	0xA00E0000	Supports DMA, HW flow control
UART2	0xA00F0000	Supports DMA
UART3	0xA0100000	Supports DMA

Module name: UART Base address: (+A00D0000h)

Address	Name	Width	Register Function
A00D0000	**RBR**	8	**RX Buffer Register** Note: RBR is modified when LCR[7] = 0
A00D0000	**THR**	8	**TX Holding Register** Note: THR is modified when LCR[7] = 0
A00D0000	**DLL**	8	**Divisor Latch (LS)** Divides the UART internal clk frequency Note: DLL is modified when LCR[7] != 0
A00D0004	**IER**	8	**Interrupt Enable Register** By storing 1 to a specific bit position, the interrupt associated with that bit is enabled. Otherwise, the interrupt will be disabled. Note: IER[3:0] are modified when LCR[7] = 0. IER[7:4] are modified when LCR[7] = 0 & EFR[4] = 1.
A00D0004	**DLM**	8	**Divisor Latch (MS)** Divides the UART internal clk frequency. Note: DLM is modified when LCR[7] != 0.
A00D0008	**IIR**	8	**Interrupt Identification Register** Priority is from high to low as the following. IIR[5:0]= 6'h1: No interrupt pending. IIR[5:0]= 6'h6: Line status interrupt (under IER[2]=1). IIR[5:0]= 6'hc: RX data time-out interrupt (under IER[0]=1). IIR[5:0]= 6'h4: RX data are placed in the RX buffer register or the RX FIFO trigger level is reached (under IER[0]=1). IIR[5:0]= 6'h2: TX holding register is empty or the contents of the TX FIFO have been reduced to its trigger level (under IER[1]=1). IIR[5:0]= 6'h10: XOFF character received (under IER[5]=1, EFR[4] = 1). IIR[5:0]= 6'h20: CTS or RTS rising edge (under IER[7]=1 or EFR[6] = 1). Note: DLM is modified when LCR != 8'hBF.
A00D0008	**FCR**	8	**FIFO Control Register** FCR is used to control the trigger levels of the FIFOs or flush the FIFOs. Note: FCR[7:6] is modified when LCR != 8'hBF FCR[5:4] is modified when LCR != 8'hBF & EFR[4] = 1 FCR[4:0] is modified when LCR != 8'hBF.
A00D0008	**EFR**	8	**Enhanced Feature Register**

This document contains information that is proprietary to MediaTek Inc. ("MediaTek") and/or its licensor(s).
Any unauthorized use, reproduction or disclosure of this document in whole or in part is strictly prohibited.

Address	Name	Width	Register Function
			EFR is used to enable HW/SW flow control. Note: EFR is modified when LCR = 8'hBF.
A00D000C	**LCR**	8	**Line Control Register** Determines characteristics of serial communication signals.
A00D0010	**MCR**	8	**Modem Control Register** Controls interface signals of the UART. Note: MCR[5:0] is modified when LCR != 8'hBF, MCR[7] can be read when LCR != 8'hBF & EFR[4] = 1.
A00D0010	**XON1**	8	**XON1 Char Register** Note: XON1 is modified when LCR = 8'hBF.
A00D0014	**LSR**	8	**Line Status Register** Note: LSR is modified when LCR != 8'hBF.
A00D0018	**XOFF1**	8	**XOFF1 Char Register** Note: XOFF1 is modified when LCR = 8'hBF.
A00D001C	**SCR**	8	**Scratch Register** General purpose read/write register. After reset, its value will be un-defined. Note: SCR is modified when LCR != 8'hBF.
A00D0020	**AUTOBAUD_EN**	8	**Auto Baud Detect Enable Register** Enables UART auto baud detect feature.
A00D0024	**HIGHSPEED**	8	**High Speed Mode Register** HIGHSPEED is used to control UART baud rate.
A00D0028	**SAMPLE_COUNT**	8	**Sample Counter Register** When HIGHSPEED=3, sample_count will be the threshold value for UART sample counter (sample_num). Count from 0 to sample_count.
A00D002C	**SAMPLE_POINT**	8	**Sample Point Register** When HIGHSPEED=3, UART gets the input data when sample_count=sample_num, e.g. system clock = 13MHz, 921600 = 13000000/14. Therefore, sample_count = 13, and sample point = 6 (sampling the central point to decrease the inaccuracy) SAMPLE_POINT is usually (SAMPLE_COUNT-1)/2 without decimal.
A00D0030	**AUTOBAUD_REG**	8	**Auto Baud Monitor Register** Autobaud detection state. Will not be changed until autobaud_en is enabled again.
A00D0034	**RATEFIX_AD**	8	**Clock Rate Fix Register** Configures system and autobaud feature clock.
A00D0038	**AUTOBAUDSAMPLE**	8	**Auto Baud Sample Register** Since the system clock may change, autobaud sample duration should change as the system clock changes. When system clock = 13MHz, autobaudsample = 6; when system clock = 26MHz, autobaudsample = 13.
A00D003C	**GUARD**	8	**Guard Time Added Register** Adds guard interval after stop bit.
A00D0040	**ESCAPE_DAT**	8	**Escape Character Register** Escape character of software flow control.
A00D0044	**ESCAPE_EN**	8	**Escape Enable Register** Uses escape character for software flow control.
A00D0048	**SLEEP_EN**	8	**Sleep Enable Register** Allows UART to enter sleep mode.
A00D004C	**DMA_EN**	8	**DMA Enable Register** Allows UART to transmit/receive data using DMA.
A00D0050	**RXTRI_AD**	8	**Rx Trigger Address** UART RX FIFO threshold.

© 2015 - 2017 MediaTek Inc.

This document contains information that is proprietary to MediaTek Inc. ("MediaTek") and/or its licensor(s).
Any unauthorized use, reproduction or disclosure of this document in whole or in part is strictly prohibited.

Address	Name	Width	Register Function
A00D0054	FRACDIV_L	8	**Fractional Divider LSB Address** Increases (+1) the sample count of bit 0 ~ 7 of data.
A00D0058	FRACDIV_M	8	**Fractional Divider MSB Address** Increases (+1) the sample count of bit 8 ~ 9 of data.
A00D005C	FCR_RD	8	**FIFO Control Register** Sets up FIFO trigger threshold.

A00D0000 RBR RX Buffer Register 00

Bit	15	14	13	12	11	10	9	8	7	6	5	4	3	2	1	0
Name									RBR							
Type									RU							
Reset									0	0	0	0	0	0	0	0

Bit(s)	Name	Description
7:0	RBR	**RX buffer register** Read-update register. The received data can be read by accessing this register. Only when LCR[7] = 0.

A00D0000 THR TX Holding Register 00

Bit	15	14	13	12	11	10	9	8	7	6	5	4	3	2	1	0
Name									THR							
Type									WO							
Reset									0	0	0	0	0	0	0	0

Bit(s)	Name	Description
7:0	THR	**TX holding Register** Write-only register. The transmitted data can be written by setting this register. Only when LCR[7] = 0.

A00D0000 DLL Divisor Latch (LS) 01

Bit	15	14	13	12	11	10	9	8	7	6	5	4	3	2	1	0
Name									DLL							
Type									RW							
Reset									0	0	0	0	0	0	0	1

Bit(s)	Name	Description
7:0	DLL	**Divisor latch low 8-bit data** *Note: Modified when LCR[7] != 0.*

A00D0004 IER Interrupt Enable Register 00

Bit	15	14	13	12	11	10	9	8	7	6	5	4	3	2	1	0
Name									CTSI	RTSI	XOFFI			ELSI	ETBEI	ERBFI
Type									RW	RW	RW			RW	RW	RW
Reset									0	0	0			0	0	0

© 2015 - 2017 MediaTek Inc.

This document contains information that is proprietary to MediaTek Inc. ("MediaTek") and/or its licensor(s).
Any unauthorized use, reproduction or disclosure of this document in whole or in part is strictly prohibited.

Bit(s)	Name	Description
7	CTSI	**Masks an interrupt that is generated when a rising edge is detected on the CTS modem control line.** *Note: This interrupt is only enabled when hardware flow control is enabled.* 0: Mask an interrupt generated when a rising edge is detected on the CTS modem control line. 1: Unmask an interrupt generated when a rising edge is detected on the CTS modem control line.
6	RTSI	**Interrupt is inhibited when a rising edge is detected on the RTS modem control line.** *Note: This interrupt is only enabled when hardware flow control is enabled.* 0: Interrupt is inhibited when a rising edge is detected on the RTS modem control line. 1: Interrupt is generated when a rising edge is detected on the RTS modem control line.
5	XOFFI	**Masks an interrupt that is generated when an XOFF character is received.** *Note: This interrupt is only enabled when software flow control is enabled.* 0: Mask an interrupt generated when an XOFF character is received. 1: Unmask an interrupt generated when an XOFF character is received.
2	ELSI	**When set to1, an interrupt will be generated if BI, FE, PE or OE (LSR[4:1]) becomes set.** 0: No interrupt will be generated if BI, FE, PE or OE (LSR[4:1]) becomes set. 1: An interrupt will be generated if BI, FE, PE or OE (LSR[4:1]) becomes set.
1	ETBEI	**When set to 1, an interrupt will be generated if the TX holding register is empty or the contents of the TX FIFO have been reduced to its trigger level.** 0: No interrupt will be generated if the TX holding register is empty or the contents of the TX FIFO have been reduced to its trigger level. 1: An interrupt will be generated if the TX folding register is empty or the contents of the TX FIFO have been reduced to its trigger level.
0	ERBFI	**When set to 1, an interrupt will be generated if RX data are placed in RX buffer register or the RX trigger level is reached.** 0: No interrupt will be generated if RX data are placed in the RX buffer register or the RX trigger level is reached. 1: An interrupt will be generated if RX Data are placed in the RX buffer register or the RX trigger level is reached.

A00D0004 **DLM** **Divisor Latch (MS)** **00**

Bit	15	14	13	12	11	10	9	8	7	6	5	4	3	2	1	0
Name									DLM							
Type									RW							
Reset									0	0	0	0	0	0	0	0

Bit(s)	Name	Description
7:0	DLM	**Divisor latch high 8-bit data** *Note: Modified when LCR[7]!=0. DLL & DLM can only be updated when DLAB(LCR[7]) is set to 1. Division by 1 will generate a BAUD signal that is constantly high. DLL & DLM setting formula is {DLM,DLL}=(system clock frequency/baud_pulse/baud_rate).* When RATE_FIX(RATEFIX_AD[0])=0, system clock frequency = 26MHz. When RATE_FIX(RATEFIX_AD[0])=1, system clock frequency = 13MHz. For baud_pulse value, refer to HIGH_SPEED(offset=24H) register. For example, when at 26MHz, default speed mode and 115200 baud rate, {DLM,DLL}=26MHz/16/115200=14.

© 2015 - 2017 MediaTek Inc.

This document contains information that is proprietary to MediaTek Inc. ("MediaTek") and/or its licensor(s).
Any unauthorized use, reproduction or disclosure of this document in whole or in part is strictly prohibited.

A00D0008 IIR **Interrupt Identification Register** **01**

Bit	15	14	13	12	11	10	9	8	7	6	5	4	3	2	1	0
Name									FIFOE		ID					
Type									RO		RU					
Reset									0	0	0	0	0	0	0	1

Bit(s)	Name	Description
7:6	FIFOE	
5:0	ID	

IIR[5:0] -Priority level- interrupt source

000001 - No interrupt pending

000110 1 Line status interrupt:

BI, FE, PE or OE set in LSR (under IER[2]=1)

001100 2 RX data time-out:

Time-out on character in RX FIFO (under IER[0]=1)

000100 3 RX data received:

RX data received or RX trigger level reached (under IER[0]=1)

000010 4 TX holding register empty:

TX holding register empty or TX FIFO trigger level reached (under IER[1]=1)

010000 5 Software flow control:

XOFF character received (under IER[5]=1)

100000 6 Hardware flow control:

CTS or RTS rising edge (under IER[7]=1 or IER[6]=1)

Line status interrupt: A RX line status interrupt (IIR[5:0] = 000110) will be generated if ELSI (IER[2]) is set and any of BI, FE, PE or OE (LSR[4:1]) becomes set. The interrupt is cleared by reading the line status register.

RX data time-out interrupt: When the virtual FIFO mode is disabled, RX data time-out interrupt will be generated if all of the following conditions are applied:

1. FIFO contains at least one character.
2. The most recent character is received longer than four character periods ago (including all start, parity and stop bits);
3. The most recent CPU read of the FIFO is longer than four character periods ago.

The timeout timer is restarted upon receipt of a new byte from the RX shift register or upon a CPU read from the RX FIFO. The RX data time-out interrupt is enabled by setting EFRBI (IER[0]) to 1 and is cleared by reading RX FIFO.

When the virtual FIFO mode is enabled, RX data time-out interrupt will be generated if all of the following conditions are applied:

1. FIFO is empty.
2. The most recent character is received longer than four character periods ago (including all start, parity and stop bits).
3. The most recent CPU read of the FIFO is longer than four character periods ago.

The timeout timer is restarted upon receipt of a new byte from the RX shift register or reading DMA_EN register. The RX Data Timeout Interrupt is enabled by setting EFRBI (IER[0]) to 1 and is cleared by reading DMA_EN register.

RX data received interrupt: A RX received interrupt (IER[5:0] = 000100b) will be generated if EFRBI (IER[0]) is set and either RX data are placed in the RX buffer register or the RX trigger level is reached. The interrupt is cleared by reading the RX buffer register or the RX FIFO (if enabled).

TX holding register empty interrupt: A TX holding register empty interrupt

© 2015 - 2017 MediaTek Inc.

This document contains information that is proprietary to MediaTek Inc. ("MediaTek") and/or its licensor(s).
Any unauthorized use, reproduction or disclosure of this document in whole or in part is strictly prohibited.

Bit(s)	Name	Description
		(IIR[5:0] = 000010) will be generated if ETRBI (IER[1]) is set and either the TX holding register is empty or the contents of the TX FIFO are reduced to its trigger level. The interrupt is cleared by writing to the TX holding register or TX FIFO if FIFO is enabled. **Software flow control interrupt:** A software flow control interrupt (IIR[5:0] = 010000) will be generated if the software flow control is enabled and XOFFI (IER[5]) becomes set, indicating that an XOFF character has been received. The interrupt is cleared by reading the interrupt identification register. **Hardware flow control interrupt:** A hardware flow control interrupt (IER[5:0] = 100000) will be generated if the hardware flow control is enabled and either RTSI (IER[6]) or CTSI (IER[7]) becomes set indicating that a rising edge has been detected on either the RTS/CTS modem control line. The interrupt is cleared by reading the interrupt identification register.

A00D0008 **FCR** **FIFO Control Register** **00**

Bit	15	14	13	12	11	10	9	8	7	6	5	4	3	2	1	0
Name									RFTL1_RFTL0		TFTL1_TFTL0			CLRT	CLRR	FIFOE
Type									WO		WO			WO	WO	WO
Reset									0	0	0	0		0	0	0

Bit(s)	Name	Description
7:6	RFTL1_RFTL0	**RX FIFO trigger threshold** RX FIFO contains total 32 bytes. 0: 1 1: 6 2: 12 3: Use RX TRIG register data
5:4	TFTL1_TFTL0	**TX FIFO trigger threshold** TX FIFO contains total 16 bytes. 0: 1 1: 4 2: 8 3: 14
2	CLRT	**Control bit to clear TX FIFO** 0: No effect 1: Clear TX FIFO
1	CLRR	**Control bit to clear RX FIFO** 0: No effect 1: Clear RX FIFO
0	FIFOE	**Enables FIFO** This bit can affect other registers setting. 0: Disable both RX and TX FIFOs. 1: Enable both RX and TX FIFOs.

A00D0008 **EFR** **Enhanced Feature Register** **00**

Bit	15	14	13	12	11	10	9	8	7	6	5	4	3	2	1	0
Name									AUTO_CTS	AUTO_RTS		ENABLE_E	SW_FLOW_CONT			
Type									RW	RW		RW	RW			
Reset									0	0		0	0	0	0	0

© 2015 - 2017 MediaTek Inc.

This document contains information that is proprietary to MediaTek Inc. ("MediaTek") and/or its licensor(s).
Any unauthorized use, reproduction or disclosure of this document in whole or in part is strictly prohibited.

Bit(s)	Name	Description
7	AUTO_CTS	**Enables hardware transmission flow control** 0: Disable 1: Enable
6	AUTO_RTS	**Enables hardware reception flow control** 0: Disable 1: Enable
4	ENABLE_E	**Enables enhancement feature** 0: Disable 1: Enable
3:0	SW_FLOW_CONT	**Software flow control bits** 00xx: No TX flow control 10xx: Transmit XON1/XOFF1 as flow control bytes xx00: No RX flow control xx10: Receive XON1/XOFF1 as flow control bytes

A00D000C **LCR** **Line Control Register** **00**

Bit	15	14	13	12	11	10	9	8	7	6	5	4	3	2	1	0
Name									DLAB	SB	SP	EPS	PEN	STB	WLS1_WLS0	
Type									RW	RW	RW	RW	RW	RW	RW	
Reset									0	0	0	0	0	0	0	0

Bit(s)	Name	Description
7	DLAB	**Divisor latch access bit** 0: RX and TX registers are read/written at Address 0 and the IER register is read/written at Address 4. 1: Divisor Latch LS is read/written at Address 0 and the Divisor Latch MS is read/written at Address 4.
6	SB	**Sets up break** 0: No effect 1: TX signal is forced to the 0 state.
5	SP	**Stick parity** 0: No effect. 1: The parity bit is forced to a defined state, depending on the states of EPS and PEN: If EPS=1 & PEN=1, the even parity bit will be set and checked. If EPS=0 & PEN=1, the odd parity bit will be set and checked.
4	EPS	**Selects even parity** 0: When EPS=0, an odd number of ones is sent and checked. 1: When EPS=1, an even number of ones is sent and checked.
3	PEN	**Enables parity** 0: The parity is neither transmitted nor checked. 1: The parity is transmitted and checked.
2	STB	**Number of STOP bits** 0: One STOP bit is always added. 1: Two STOP bits are added after each character is sent; unless the character length is 5 when 1 STOP bit is added.
1:0	WLS1_WLS0	**Selects word length** 0: 5 bits 1: 6 bits 2: 7 bits 3: 8 bits

© 2015 - 2017 MediaTek Inc.

This document contains information that is proprietary to MediaTek Inc. (“MediaTek”) and/or its licensor(s).
Any unauthorized use, reproduction or disclosure of this document in whole or in part is strictly prohibited.

A00D0010 MCR Modem Control Register 00

Bit	15	14	13	12	11	10	9	8	7	6	5	4	3	2	1	0
Name									XOFF_STATUS			Loop			RTS	
Type									RU			RW			RW	
Reset									0			0			0	

Bit(s)	Name	Description
7	XOFF_STATUS	**Read-only bit** 0: When an XON character is received. 1: When an XOFF character is received.
4	Loop	**Loop-back control bit** 0: No loop-back is enabled. 1: Loop-back mode is enabled.
1	RTS	**Controls the state of the output NRTS, even in loop mode.** 0: RTS will always output 1. 1: RTS's output will be controlled by flow control condition.

A00D0010 XON1 XON1 Char Register 00

Bit	15	14	13	12	11	10	9	8	7	6	5	4	3	2	1	0
Name									XON1							
Type									RW							
Reset									0	0	0	0	0	0	0	0

Bit(s)	Name	Description
7:0	XON1	**XON1 character for software flow control** Modified only when LCR = 8'hBF.

A00D0014 LSR Line Status Register 60

Bit	15	14	13	12	11	10	9	8	7	6	5	4	3	2	1	0
Name									FIFOERR	TEMT	THRE	BI	FE	PE	OE	DR
Type									RU	RU	RU	RU	RU	RU	RU	RU
Reset									0	1	1	0	0	0	0	0

Bit(s)	Name	Description
7	FIFOERR	**RX FIFO error indicator** 0: No PE, FE, BI set in the RX FIFO. 1: Set to 1 when there is at least one PE, FE or BI in the RX FIFO.
6	TEMT	**TX holding register (or TX FIFO) and the TX shift register are empty.** 0: Empty conditions below are not met. 1: If FIFOs are enabled, the bit will be set whenever the TX FIFO and the TX shift register are empty. If FIFOs are disabled, the bit will be set whenever TX holding register and TX shift register are empty.
5	THRE	**Indicates if there is room for TX holding register or TX FIFO is reduced to its trigger level** 0: Reset whenever the contents of the TX FIFO are more than its trigger level (FIFOs are enabled), or whenever TX holding register is not empty (FIFOs are disabled). 1: Set whenever the contents of the TX FIFO are reduced to its trigger level

© 2015 - 2017 MediaTek Inc.

This document contains information that is proprietary to MediaTek Inc. ("MediaTek") and/or its licensor(s).
Any unauthorized use, reproduction or disclosure of this document in whole or in part is strictly prohibited.

Bit(s)	Name	Description
		(FIFOs are enabled), or whenever TX holding register is empty and ready to accept new data (FIFOs are disabled).
4	BI	**Break interrupt** 0: Reset by the CPU reading this register 1: If the FIFOs are disabled, this bit will be set whenever the SIN is held in the 0 state for more than one transmission time (START bit + DATA bits + PARITY + STOP bits). If the FIFOs are enabled, this error will be associated with a corresponding character in the FIFO and is flagged when this byte is at the top of the FIFO. When a break occurs, only one zero character is loaded into the FIFO: The next character transfer is enabled when RX signal goes into the marking state and receives the next valid start bit.
3	FE	**Framing error** 0: Reset by the CPU reading this register 1: If the FIFOs are disabled, this bit will be set if the received data do not have a valid STOP bit. If the FIFOs are enabled, the state of this bit will be revealed when the byte it refers to is the next to be read.
2	PE	**Parity error** 0: Reset by the CPU reading this register 1: If the FIFOs are disabled, this bit will be set if the received data do not have a valid parity bit. If the FIFOs are enabled, the state of this bit will be revealed when the referred byte is the next to be read.
1	OE	**Overrun error** 0: Reset by the CPU reading this register. 1: If the FIFOs are disabled, this bit will be set if the RX buffer is not read by the CPU before the new data from the RX shift register overwrites the previous contents. If the FIFOs are enabled, an overrun error will occur when the RX FIFO is full and the RX shift register becomes full. OE will be set as soon as this happens. The character in the shift register is then overwritten, but not transferred to the FIFO.
0	DR	**Data ready** 0: Cleared by the CPU reading the RX buffer or by reading all the FIFO bytes. 1: Set by the RX buffer register has data or FIFO becoming no empty.

A00D0018 XOFF1 XOFF1 Char Register 00

Bit	15	14	13	12	11	10	9	8	7	6	5	4	3	2	1	0
Name									XOFF1							
Type									RW							
Reset									0	0	0	0	0	0	0	0

Bit(s)	Name	Description
7:0	XOFF1	**XOFF1 character for software flow control** Modified only when LCR = 0xBF.

A00D001C SCR Scratch Register 00

Bit	15	14	13	12	11	10	9	8	7	6	5	4	3	2	1	0
Name									SCR							
Type									RW							
Reset									0	0	0	0	0	0	0	0

Bit(s)	Name	Description
7:0	SCR	**General purpose read/write register** The register will not be reset. Modified when LCR != 8'hBF.

© 2015 - 2017 MediaTek Inc.

This document contains information that is proprietary to MediaTek Inc. ("MediaTek") and/or its licensor(s).
Any unauthorized use, reproduction or disclosure of this document in whole or in part is strictly prohibited.

A00D0020 AUTOBAUD_EN Auto Baud Detect Enable Register 00

Bit	15	14	13	12	11	10	9	8	7	6	5	4	3	2	1	0
Name														SLEEP_ACK_SEL	AUTOBAUD_SEL	AUTOBAUD_EN
Type														RO	RW	RW
Reset														0	0	0

Bit(s)	Name	Description
2	SLEEP_ACK_SEL	**Selects sleep ack when autobaud_en** 0: Support sleep_ack when autobaud_en is opened . 1: Does not support sleep_ack when autobaud_en is opened .
1	AUTOBAUD_SEL	**Selects auto-baud** 0: Support standard baud rate detection 1: Support non_standard baud rate detection (support baud from 110 to 115200; recommended to use 26MHz to auto fix) .
0	AUTOBAUD_EN	**Auto-baud enabling signal** 0: Disable auto-baud function 1: Enable auto-baud function (UARTn+0024h SPEED should be set to 0.) *Note: When AUTOBAUD_EN is active, there should not be A*/a* char before the auto baud char AT/at. If A*/a* is Inevitable, autobaud will fail and please disable AUTOBAUD_EN to reset the autobaud feature and autobaud_en again. The AUTOBAUD_EN will automatic clear when baud rate detect success.*

A00D0024 HIGHSPEED High Speed Mode Register 00

Bit	15	14	13	12	11	10	9	8	7	6	5	4	3	2	1	0
Name															SPEED	
Type															RW	
Reset															0	0

Bit(s)	Name	Description
1:0	SPEED	**UART sample counter base** 0: Based on 16*baud_pulse, baud_rate = system clock frequency/16/{DLM, DLL} 1: Based on 8*baud_pulse, baud_rate = system clock frequency/8/{DLM, DLL} 2: Based on 4*baud_pulse, baud_rate = system clock frequency/4/{DLM, DLL} 3: Based on sampe_count * baud_pulse, baud_rate = system clock frequency / (sampe_count+1)/{DLM, DLL}

A00D0028 SAMPLE_COUNT Sample Counter Register 00

Bit	15	14	13	12	11	10	9	8	7	6	5	4	3	2	1	0
Name									SAMPLECOUNT							
Type									RW							
Reset									0	0	0	0	0	0	0	0

Bit(s)	Name	Description
7:0	SAMPLECOUNT	Only useful when HIGHSPEED mode = 3.

A00D002C SAMPLE_POINT Sample Point Register FF

Bit	15	14	13	12	11	10	9	8	7	6	5	4	3	2	1	0
Name									SAMPLEPOINT							
Type									RW							
Reset									1	1	1	1	1	1	1	1

© 2015 - 2017 MediaTek Inc.

This document contains information that is proprietary to MediaTek Inc. ("MediaTek") and/or its licensor(s).
Any unauthorized use, reproduction or disclosure of this document in whole or in part is strictly prohibited.

Bit(s)	Name	Description
7:0	SAMPLEPOINT	SAMPLE_POINT is usually (SAMPLE_COUNT-1)/2 without decimal. Effective only when HIGHSPEED=3.

A00D0030 **AUTOBAUD_REG** **Auto Baud Monitor Register** **00**

Bit	15	14	13	12	11	10	9	8	7	6	5	4	3	2	1	0
Name									BAUD_STAT				BAUD_RATE			
Type									RU				RU			
Reset									0	0	0	0	0	0	0	0

Bit(s)	Name	Description
7:4	BAUD_STAT	**Autobaud state (only true value in standard autobaud detection)** 0: Autobaud is detecting. 1: AT_7N1 2: AT_7O1 3: AT_7E1 4: AT_8N1 5: AT_8O1 6: AT_8E1 7: at_7N1 8: at_7E1 9: at_7O1 10: at_8N1 11: at_8E1 12: at_8O1 13: Autobaud detection fails
3:0	BAUD_RATE	**Autobaud baud rate (only true value in standard autobaud detection)** 0: 115,200 1: 57,600 2: 38,400 3: 19,200 4: 9,600 5: 4,800 6: 2,400 7: 1,200 8: 300 9: 110

A00D0034 **RATEFIX_AD** **Clock Rate Fix Register** **00**

Bit	15	14	13	12	11	10	9	8	7	6	5	4	3	2	1	0
Name															AUTOBAUD_RATE_FIX	RATE_FIX
Type															RW	RW
Reset															0	0

Bit(s)	Name	Description
1	AUTOBAUD_RATE_FIX	0: Use 26MHz as system clock for UART auto baud detection 1: Use 13MHz as system clock for UART auto baud detection

© 2015 - 2017 MediaTek Inc.

This document contains information that is proprietary to MediaTek Inc. ("MediaTek") and/or its licensor(s).
Any unauthorized use, reproduction or disclosure of this document in whole or in part is strictly prohibited.

Bit(s)	Name	Description
0	RATE_FIX	0: Use 26MHz as system clock for UART TX/RX 1: Use 13MHz as system clock for UART TX/RX

A00D0038 AUTOBAUDSAMPLE Auto Baud Sample Register 0D

Bit	15	14	13	12	11	10	9	8	7	6	5	4	3	2	1	0
Name											AUTOBAUDSAMPLE					
Type											RW					
Reset											0	0	1	1	0	1

Bit(s)	Name	Description
5:0	AUTOBAUDSAMPLE	**clk diveision for autobaud rate detection** System clk 26m: 'd13 System clk 13m: 'd6

A00D003C GUARD Guard Time Added Register 0F

Bit	15	14	13	12	11	10	9	8	7	6	5	4	3	2	1	0
Name												GUARD_EN	GUARD_CNT			
Type												RW	RW			
Reset												0	1	1	1	1

Bit(s)	Name	Description
4	GUARD_EN	**Guard interval add enabling signal** 0: No guard interval added 1: Add guard interval after stop bit.
3:0	GUARD_CNT	**Guard interval count value** Guard interval = [1/(UART clock frequency / HIGHSPEED / {DLM, DLL})] *GUARD_CNT.

A00D0040 ESCAPE_DAT Escape Character Register FF

Bit	15	14	13	12	11	10	9	8	7	6	5	4	3	2	1	0
Name									ESCAPE_DAT							
Type									RW							
Reset									1	1	1	1	1	1	1	1

Bit(s)	Name	Description
7:0	ESCAPE_DAT	**Escape character added before software flow control data and escape character** If TX data are xon (31h), with esc_en =1, UART will transmit data as esc + CEh (~xon).

A00D0044 ESCAPE_EN Escape Enable Register 00

Bit	15	14	13	12	11	10	9	8	7	6	5	4	3	2	1	0
Name																ESC_EN
Type																RW
Reset																0

© 2015 - 2017 MediaTek Inc.

This document contains information that is proprietary to MediaTek Inc. ("MediaTek") and/or its licensor(s).
Any unauthorized use, reproduction or disclosure of this document in whole or in part is strictly prohibited.

Bit(s)	Name	Description
0	ESC_EN	**Adds escape character in transmitter and removes escape character in receiver by UART** 0: Does not deal with the escape character 1: Add escape character in transmitter and remove escape character in receiver

A00D0048 SLEEP_EN Sleep Enable Register 00

Bit	15	14	13	12	11	10	9	8	7	6	5	4	3	2	1	0
Name																SLEEP_EN
Type																RW
Reset																0

Bit(s)	Name	Description
0	SLEEP_EN	**For sleep mode issue** 0: Does not deal with sleep mode indicate signal 1: Activate hardware flow control or software control according to software initial setting when the chip enters sleep mode. Release hardware flow when the chip wakes up. However, for software control, UART sends xon when awaken and when FIFO does not reach threshold level.

A00D004C DMA_EN DMA Enable Register 00

Bit	15	14	13	12	11	10	9	8	7	6	5	4	3	2	1	0
Name													FIFO_lsr_sel	TO_CNT_AUTORST	TX_DMA_EN	RX_DMA_EN
Type													RW	RW	RW	RW
Reset													0	0	0	0

Bit(s)	Name	Description
3	FIFO_lsr_sel	**Selects FIFO LSR mode** 0: LSR will hold the first line status error state until you read the LSR register. 1: LSR will update automatically.
2	TO_CNT_AUTORST	**Time-out counter auto reset register** 0: After RX time-out happens, SW shall reset the interrupt by reading DMA_EN. 1: The RX time-out counter will be auto reset.
1	TX_DMA_EN	**TX_DMA mechanism enabling signal** 0: Does not use DMA in TX 1: Use DMA in TX. When this register is enabled, the flow control will be based on the DMA threshold and generate a time-out interrupt for DMA.
0	RX_DMA_EN	**RX_DMA mechanism enabling signal** 0: Does not use DMA in RX 1: Use DMA in RX. When this register is enabled, the flow control will be based on the DMA threshold and generate a time-out interrupt

A00D0050 RXTRI_AD Rx Trigger Address 00

Bit	15	14	13	12	11	10	9	8	7	6	5	4	3	2	1	0
Name													RXTRIG			
Type													RW			
Reset													0	0	0	0

© 2015 - 2017 MediaTek Inc.

This document contains information that is proprietary to MediaTek Inc. ("MediaTek") and/or its licensor(s).
Any unauthorized use, reproduction or disclosure of this document in whole or in part is strictly prohibited.

Bit(s)	Name	Description
3:0	RXTRIG	When { RFTL1_RFTL0}=2'b11, the RX FIFO threshold will be Rxtrig. The value is suggested to be smaller than half of RX FIFO size, which is 32 bytes.

A00D0054 FRACDIV_L Fractional Divider LSB Address 00

Bit	15	14	13	12	11	10	9	8	7	6	5	4	3	2	1	0
Name									FRACDIV_L							
Type									RW							
Reset									0	0	0	0	0	0	0	0

Bit(s)	Name	Description
7:0	FRACDIV_L	Adds sampling count (+1) from state data7 to data0 to contribute fractional divisor.only when high_speed=3.

A00D0058 FRACDIV_M Fractional Divider MSB Address 00

Bit	15	14	13	12	11	10	9	8	7	6	5	4	3	2	1	0
Name															FRACDIV_M	
Type															RW	
Reset															0	0

Bit(s)	Name	Description
1:0	FRACDIV_M	Adds sampling count when in state stop to parity to contribute fractional divisor.only when high_speed=3.

A00D005C FCR_RD FIFO Control Register 00

Bit	15	14	13	12	11	10	9	8	7	6	5	4	3	2	1	0
Name									RFTL1_RFTL0		TFTL1_TFTL0			CLRT	CLRR	FIFOE
Type									RO		RO			RO	RO	RO
Reset									0	0	0	0		0	0	0

Bit(s)	Name	Description
7:6	RFTL1_RFTL0	**RX FIFO trigger threshold** RX FIFO contains total 32 bytes. 0: 1 1: 6 2: 12 3: Use RX TRIG register data
5:4	TFTL1_TFTL0	**TX FIFO trigger threshold** TX FIFO contains total 32 bytes. 0: 1 1: 4 2: 8 3: 14
2	CLRT	0: TX FIFO is not cleared. 1: TX FIFO is cleared.
1	CLRR	0: RX FIFO is not cleared. 1: RX FIFO is cleared.
0	FIFOE	**Enables FIFO**

© 2015 - 2017 MediaTek Inc.

This document contains information that is proprietary to MediaTek Inc. ("MediaTek") and/or its licensor(s).
Any unauthorized use, reproduction or disclosure of this document in whole or in part is strictly prohibited.

Bit(s)	Name	Description
		This bit must be set to 1 for any of other bits in the registers to have any effect. 0: RX and TX FIFOs are not enabled. 1: RX and TX FIFOs are enabled.

© 2015 - 2017 MediaTek Inc.

This document contains information that is proprietary to MediaTek Inc. (“MediaTek”) and/or its licensor(s).
Any unauthorized use, reproduction or disclosure of this document in whole or in part is strictly prohibited.

7. Serial Peripheral Interface Master Controller

7.1. General Description

The SPI (Serial Peripheral Interface) is a bit-serial, four-pin transmission protocol. Figure 7-1 is an example of the connection between the SPI master and SPI slave. The SPI controller is a master responsible of data transmission with slave.

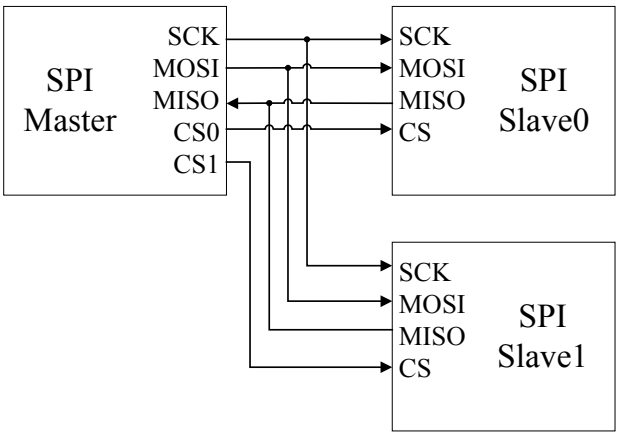

Figure 7-1. Pin connection between SPI master and SPI slave

Figure 7-2 shows the waveform during SPI transmission. The low active CS_N determines the start point and end point of one transaction. The CS_N setup time, hold time and idle time are also depicted.

CPOL defines the clock polarity in the transmission. Two types of polarity can be adopted, i.e. polarity 0 and polarity 1. Figure 7-2 shows both of the clock polarity (CPOL) as examples.

CPHA defines the legal timing to sample MOSI and MISO. Two different methods can be adopted.

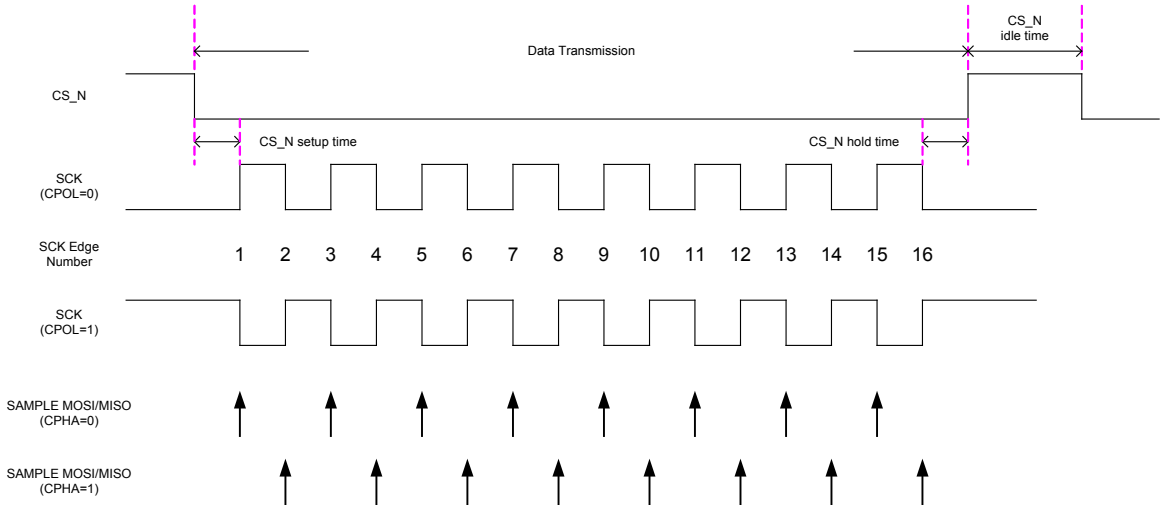

Figure 7-2. SPI transmission formats

© 2015 - 2017 MediaTek Inc.

This document contains information that is proprietary to MediaTek Inc. (“MediaTek”) and/or its licensor(s).
Any unauthorized use, reproduction or disclosure of this document in whole or in part is strictly prohibited.

Table 7-1. SPI master controller interface

Signal name	Type	Description
CS0	O	Low active chip selection signal
CS1	O	Low active chip selection signal
SCK	O	The (bit) serial clock
MOSI	O	Data signal from master output to slave input
MISO	I	Data signal from slave output to master input

7.1.1. Features

The features of the SPI master controller are:

- Configurable CS_N setup time, hold time and idle time
- Programmable SCK high time and low time
- Configurable transmitting and receiving bit order
- Two configurable modes for the source of the data to be transmitted: 1) In TX DMA mode, the SPI controller automatically fetches the transmitted data (to be put on the MOSI line) from memory; 2) In TX FIFO mode, the data to be transmitted on the MOSI line are written to FIFO before the start of the transaction.
- Two configurable modes for destination of the data to be received: 1) In RX DMA mode, the SPI controller automatically stores the received data (from MISO line) to memory; 2) In RX FIFO mode, the received data keep being in RX FIFO of the SPI controller. The processor must read back the data by itself.
- Adjustable endian order from/to memory system
- Programmable byte length for transmission
- Unlimited length for transmission, achieved by the operation of PAUSE mode. In PAUSE mode, the CS_N signal will keep being active (low) after the transmission. At this time, the SPI controller is in PAUSE_IDLE state, ready to receive the resume command. Figure 7-3 is the state transition.
- Configurable option to control CS_N de-assertion between byte transfers. The controller supports a special transmission format called CS_N de-assert mode. Figure 7-4 illustrates the waveform in this transmission format.
- SPI master supports connecting two SPI slaves.

© 2015 - 2017 MediaTek Inc.

This document contains information that is proprietary to MediaTek Inc. (“MediaTek”) and/or its licensor(s).
Any unauthorized use, reproduction or disclosure of this document in whole or in part is strictly prohibited.

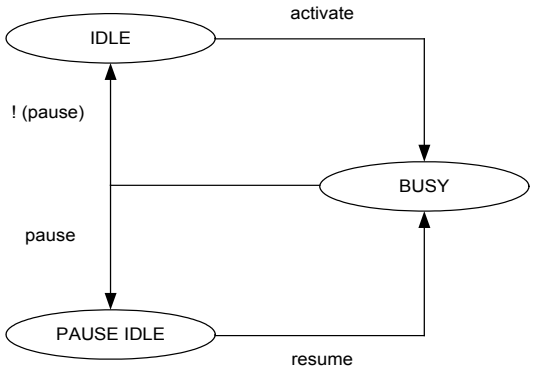

Figure 7-3. Operation flow with or without PAUSE mode

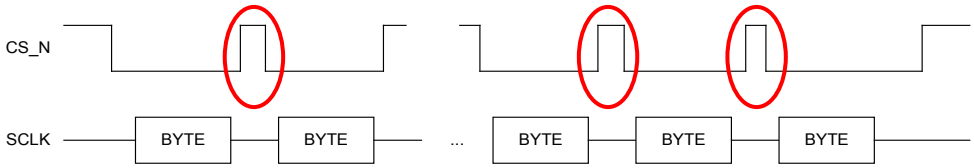

Figure 7-4. CS_N de-assert mode

7.1.2. Block Diagram

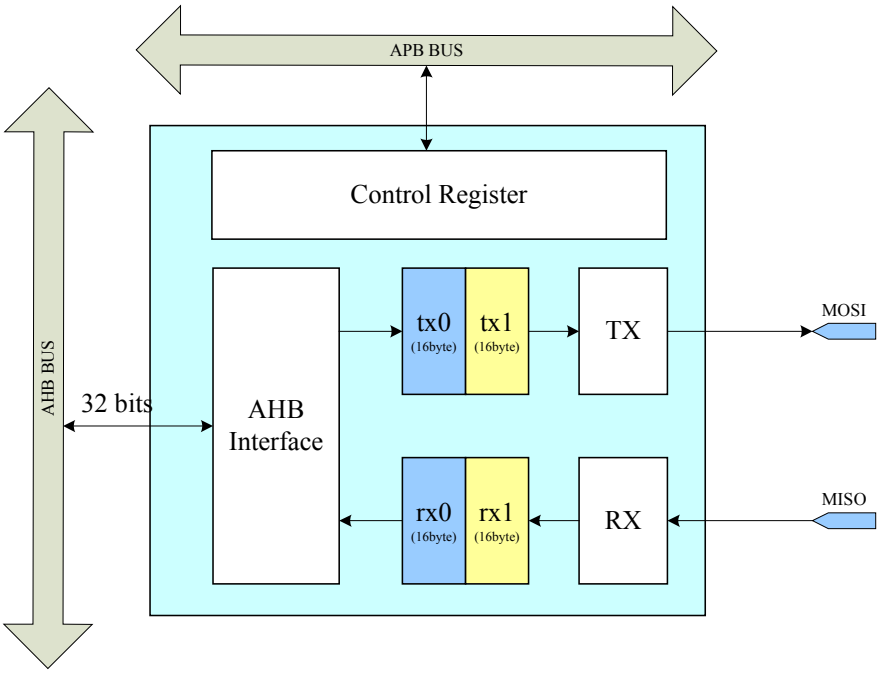

Figure 7-5. Block diagram of SPI master controller

This document contains information that is proprietary to MediaTek Inc. ("MediaTek") and/or its licensor(s).
Any unauthorized use, reproduction or disclosure of this document in whole or in part is strictly prohibited.

7.2. Register Definition

There are four SPI master controllers in this SOC. The usage of the registers below is the same except that the base address should be changed to respective one.

SPI number	Base address
SPI0	0xA0110000
SPI1	0xA0120000
SPI2	0xA0130000
SPI3	0xA0140000

Module name: SPI0 Base address: (+A0110000h)

Address	Name	Width	Register Function
A0110000	SPI_CFG0	32	SPI Configuration 0 Register
A0110004	SPI_CFG1	32	SPI Configuration 1 Register
A0110008	SPI_TX_SRC	32	SPI TX Source Address Register
A011000C	SPI_RX_DST	32	SPI RX Destination Address Register
A0110010	SPI_TX_DATA	32	SPI TX DATA FIFO
A0110014	SPI_RX_DATA	32	SPI RX DATA FIFO
A0110018	SPI_CMD	32	SPI Command Register
A011001C	SPI_STATUS0	32	SPI Status 0 Register
A0110020	SPI_STATUS1	32	SPI Status 1 Register
A0110024	SPI_PAD_MACRO_SEL	32	SPI pad_macro selection Register
A0110028	SPI_CFG2	32	SPI Configuration 2 Register

A0110000 SPI_CFG0 SPI Configuration 0 Register 00000000

Bit	31	30	29	28	27	26	25	24	23	22	21	20	19	18	17	16
Name	CS_SETUP_COUNT															
Type	RW															
Reset	0	0	0	0	0	0	0	0	0	0	0	0	0	0	0	0
Bit	15	14	13	12	11	10	9	8	7	6	5	4	3	2	1	0
Name	CS_HOLD_COUNT															
Type	RW															
Reset	0	0	0	0	0	0	0	0	0	0	0	0	0	0	0	0

Bit(s)	Mnemonic	Name	Description
31:16	CS_SETUP_COUNT	CS_SETUP_COUNT	**Chip select setup time** Setup time = (CS_SETUP_COUNT+1)*CLK_PERIOD, where CLK_PERIOD (38.46ns) is the cycle time of the clock the SPI engine adopts.
15:0	CS_HOLD_COUNT	CS_HOLD_COUNT	**Chip select hold time** Hold time = (CS_HOLD_COUNT+1)*CLK_PERIOD, where CLK_PERIOD (38.46ns) is the cycle time of the clock the SPI engine adopts.

© 2015 - 2017 MediaTek Inc.

This document contains information that is proprietary to MediaTek Inc. ("MediaTek") and/or its licensor(s).
Any unauthorized use, reproduction or disclosure of this document in whole or in part is strictly prohibited.

A0110004 SPI_CFG1 **SPI Configuration 1 Register** **00000000**

Bit	31	30	29	28	27	26	25	24	23	22	21	20	19	18	17	16
Name	GET_TICK_DLY					DEVICE_SEL	PACKET_LENGTH									
Type	RW					RW	RW									
Reset	0	0	0			0	0	0	0	0	0	0	0	0	0	0
Bit	15	14	13	12	11	10	9	8	7	6	5	4	3	2	1	0
Name	PACKET_LOOP_CNT								CS_IDLE_COUNT							
Type	RW								RW							
Reset	0	0	0	0	0	0	0	0	0	0	0	0	0	0	0	0

Bit(s)	Mnemonic	Name	Description
31:29	**GET_TICK_DLY**	GET_TICK_DLY	If the speed of SPI is not fast enough, the three bits can help tolerate get_tick timing. The timing range between get_tick is one cycle depending on CLK_PERIOD (38.46ns).
26	**DEVICE_SEL**	DEVICE_SEL	SPI master receives device 0 or device 1 MISO data.
25:16	**PACKET_LENGTH**	PACKET_LENGTH	
15:8	**PACKET_LOOP_CNT**	PACKET_LOOP_CNT	**The transmission on SPI bus consists of units bytes.** Hence, PACKET_LENGTH[9:0] define number of bytes in one packet; PACKET_LOOP_CNT[7:0] define the number of packets within one transaction. The number of bytes in one packet = PACKET_LENGTH + 1. The number of packets in one transaction = PACKET_LOOP_CNT + 1. Total bytes of one transaction = (PACKET_LENGTH + 1) *(PACKET_LOOP_CNT + 1).
7:0	**CS_IDLE_COUNT**	CS_IDLE_COUNT	**Chip select idle time** Time between consecutive transaction = (CS_HOLD_COUNT+1)*CLK_PERIOD.

A0110008 SPI_TX_SRC **SPI TX Source Address Register** **00000000**

Bit	31	30	29	28	27	26	25	24	23	22	21	20	19	18	17	16
Name	SPI_TX_SRC															
Type	RW															
Reset	0	0	0	0	0	0	0	0	0	0	0	0	0	0	0	0
Bit	15	14	13	12	11	10	9	8	7	6	5	4	3	2	1	0
Name	SPI_TX_SRC															
Type	RW															
Reset	0	0	0	0	0	0	0	0	0	0	0	0	0	0	0	0

Bit(s)	Mnemonic	Name	Description
31:0	**SPI_TX_SRC**	SPI_TX_SRC	**If TX_DMA_EN is set, the data to be put on the MOSI line will be kept in memory in advance, and the SPI controller will automatically read the data from memory. SPI_TX_SRC defines the memory address from which SPI controller starts to read data. The address must be aligned to word boundary.**

© 2015 - 2017 MediaTek Inc.

This document contains information that is proprietary to MediaTek Inc. ("MediaTek") and/or its licensor(s).
Any unauthorized use, reproduction or disclosure of this document in whole or in part is strictly prohibited.

A011000C SPI_RX_DST **SPI RX Destination Address Register** **00000000**

Bit	31	30	29	28	27	26	25	24	23	22	21	20	19	18	17	16
Name	SPI_RX_DST															
Type	RW															
Reset	0	0	0	0	0	0	0	0	0	0	0	0	0	0	0	0
Bit	15	14	13	12	11	10	9	8	7	6	5	4	3	2	1	0
Name	SPI_RX_DST															
Type	RW															
Reset	0	0	0	0	0	0	0	0	0	0	0	0	0	0	0	0

Bit(s)	Mnemonic	Name	Description
31:0	**SPI_RX_DST**	SPI_RX_DST	**If RX_DMA_EN is set, the received data from the MISO line will be moved to memory automatically by the SPI controller. SPI_RX_DST defines the memory address to which the SPI controller starts to store the data. The address must be aligned to word boundary.**

A0110010 SPI_TX_DATA **SPI TX DATA FIFO** **00000000**

Bit	31	30	29	28	27	26	25	24	23	22	21	20	19	18	17	16
Name	SPI_TX_DATA															
Type	WO															
Reset	0	0	0	0	0	0	0	0	0	0	0	0	0	0	0	0
Bit	15	14	13	12	11	10	9	8	7	6	5	4	3	2	1	0
Name	SPI_TX_DATA															
Type	WO															
Reset	0	0	0	0	0	0	0	0	0	0	0	0	0	0	0	0

Bit(s)	Mnemonic	Name	Description
31:0	**SPI_TX_DATA**	SPI_TX_DATA	**The depth of the TX FIFO is 32 bytes. Write to this register to write 4 bytes to TX FIFO. The TX FIFO pointer will automatically move toward the next four bytes. Read from this register to read 4 bytes from the FIFO, and the TX FIFO pointer will automatically move toward the next four bytes.**

A0110014 SPI_RX_DATA **SPI RX DATA FIFO** **00000000**

Bit	31	30	29	28	27	26	25	24	23	22	21	20	19	18	17	16
Name	SPI_RX_DATA															
Type	RO															
Reset	0	0	0	0	0	0	0	0	0	0	0	0	0	0	0	0
Bit	15	14	13	12	11	10	9	8	7	6	5	4	3	2	1	0
Name	SPI_RX_DATA															
Type	RO															
Reset	0	0	0	0	0	0	0	0	0	0	0	0	0	0	0	0

Bit(s)	Mnemonic	Name	Description
31:0	**SPI_RX_DATA**	SPI_RX_DATA	**The depth of the RX FIFO is 32 bytes. Read from this register to read 4 bytes from RX FIFO. The RX FIFO pointer will automatically move toward the**

© 2015 - 2017 MediaTek Inc.

This document contains information that is proprietary to MediaTek Inc. ("MediaTek") and/or its licensor(s).
Any unauthorized use, reproduction or disclosure of this document in whole or in part is strictly prohibited.

Bit(s)	Mnemonic	Name	Description
			next four bytes. Write to this register to write 4 bytes to FIFO, and the RX FIFO pointer will automatically move toward the next four bytes.

A0110018 SPI_CMD **SPI Command Register** **00000000**

Bit	31	30	29	28	27	26	25	24	23	22	21	20	19	18	17	16
Name															PAUSE_IE	FINISH_IE
Type															RW	RW
Reset															0	0
Bit	15	14	13	12	11	10	9	8	7	6	5	4	3	2	1	0
Name	TX_ENDIAN	RX_ENDIAN	RXMSBF	TXMSBF	TX_DMA_EN	RX_DMA_EN	CPOL	CPHA	CS_POL	SAMPLE_SEL	CS_DEASSERT_EN	PAUSE_EN		RST	RESUME	CMD_ACT
Type	RW	RW	RW	RW	RW	RW	RW	RW	RW	RW	RW	RW		RW	WO	WO
Reset	0	0	0	0	0	0	0	0	0	0	0	0		0	0	0

Bit(s)	Mnemonic	Name	Description
17	**PAUSE_IE**	PAUSE_IE	**Interrupt enable bit of pause flag in SPI status register**
16	**FINISH_IE**	FINISH_IE	**Interrupt enable bit of finish flag in SPI status register**
15	**TX_ENDIAN**	TX_ENDIAN	**Defines whether to reverse the endian order of the data DMA from memory. Default (0) is not to reverse. Only supports DMA mode.**
14	**RX_ENDIAN**	RX_ENDIAN	**Defines whether to reverse the endian order of the data DMA to memory. Default (0) is not to reverse.**
13	**RXMSBF**	RXMSBF	**Indicates the data received from MISO line is MSB first or not. Set RXMSBF to 1 for MSB first, otherwise set it to 0.**
12	**TXMSBF**	TXMSBF	**Indicates the data sent on MOSI line is MSB first or not. Set TXMSBF to 1 for MSB first, otherwise set it to 0.**
11	**TX_DMA_EN**	TX_DMA_EN	**DMA mode enable bit of the data to be transmitted. Default (0) is not to enable.**
10	**RX_DMA_EN**	RX_DMA_EN	**DMA mode enable bit of the data being received. Default (0) is not to enable.**
9	**CPOL**	CPOL	**Control bit of the SCK polarity.** **0: CPOL = 0** **1: CPOL = 1**
8	**CPHA**	CPHA	**Defines the SPI clock format 0 or SPI clock format 1 during transmission**

© 2015 - 2017 MediaTek Inc.

This document contains information that is proprietary to MediaTek Inc. (“MediaTek”) and/or its licensor(s).
Any unauthorized use, reproduction or disclosure of this document in whole or in part is strictly prohibited.

Bit(s)	Mnemonic	Name	Description
			0: CPHA = 0 **1: CPHA = 1**
7	**CS_POL**	CS_POL	**Control bit of chip select polarity** **0: Active low** **1: Active high**
6	**SAMPLE_SEL**	SAMPLE_SEL	**Control bit of sample edge of miso** **0: Positive edge** **1: Negative edge**
5	**CS_DEASSERT_EN**	CS_DEASSERT_EN	**Enable bit of the chip select de-assertion mode. Set it to1 to enable this mode.**
4	**PAUSE_EN**	PAUSE_EN	**Enable bit of the pause mode. Set it to 1 to enable this mode.**
2	**RST**	RST	**Software reset bit; resets the state machine and data FIFO of SPI controller. When this bit is 1, software reset is active high. The default value is 0.**
1	**RESUME**	RESUME	**This bit is used when controller is in PAUSE IDLE state. Write 1 to this bit to trigger the SPI controller resume transfer from PAUSE IDLE state.**
0	**CMD_ACT**	CMD_ACT	**Command activate bit. Write 1 to this bit to trigger the SPI controller to start the transaction.**

A011001C SPI_STATUS0 SPI Status 0 Register 00000000

Bit	31	30	29	28	27	26	25	24	23	22	21	20	19	18	17	16
Name																
Type																
Reset																
Bit	15	14	13	12	11	10	9	8	7	6	5	4	3	2	1	0
Name															**PAUSE**	**FINISH**
Type															RC	RC
Reset															0	0

Bit(s)	Mnemonic	Name	Description
1	**PAUSE**	PAUSE	**Interrupt status bit in pause mode. It will be set by the SPI controller when it completes the transaction, entering the PAUSE IDLE state.**
0	**FINISH**	FINISH	**Interrupt status bit in non-pause mode. It will be set by the SPI controller when it completes the transaction, entering the IDLE state.**

© 2015 - 2017 MediaTek Inc.

This document contains information that is proprietary to MediaTek Inc. (“MediaTek”) and/or its licensor(s).
Any unauthorized use, reproduction or disclosure of this document in whole or in part is strictly prohibited.

A0110020 SPI_STATUS1 **SPI Status 1 Register** **00000001**

Bit	31	30	29	28	27	26	25	24	23	22	21	20	19	18	17	16
Name																
Type																
Reset																
Bit	15	14	13	12	11	10	9	8	7	6	5	4	3	2	1	0
Name																BUSY
Type																RO
Reset																1

Bit(s)	Mnemonic	Name	Description
0	**BUSY**	BUSY	**This status flag reflects the SPI controller is busy or not. This bit is low active, i.e. 0 represents the SPI controller is busy now.** 1'b1: Idle 1'b0: Busy

A0110024 SPI_PAD_MACRO_SEL **SPI pad_macro selection Register** **00000000**

Bit	31	30	29	28	27	26	25	24	23	22	21	20	19	18	17	16
Name																
Type																
Reset																
Bit	15	14	13	12	11	10	9	8	7	6	5	4	3	2	1	0
Name														PAD_MACRO_SEL		
Type														RW		
Reset														0	0	0

Bit(s)	Mnemonic	Name	Description
2:0	**PAD_MACRO_SEL**	PAD_MACRO_SEL	**Selects which PAD group SPI will use**

Note:
SPI0 pad macro A = 0, SPI0 pad macro B = 1;
SPI1 pad macro A = 0, SPI1 pad macro B = 2;
SPI2 pad macro A = 0, SPI2 pad macro B = 2;
SPI3 pad macro A = 0, SPI3 pad macro B = 1;

A0110028 SPI_CFG2 **SPI Configuration 2 Register** **00000000**

Bit	31	30	29	28	27	26	25	24	23	22	21	20	19	18	17	16
Name	SCK_LOW_COUNT															
Type	RW															
Reset	0	0	0	0	0	0	0	0	0	0	0	0	0	0	0	0
Bit	15	14	13	12	11	10	9	8	7	6	5	4	3	2	1	0
Name	SCK_HIGH_COUNT															
Type	RW															
Reset	0	0	0	0	0	0	0	0	0	0	0	0	0	0	0	0

Bit(s)	Mnemonic	Name	Description

© 2015 - 2017 MediaTek Inc.

This document contains information that is proprietary to MediaTek Inc. ("MediaTek") and/or its licensor(s).
Any unauthorized use, reproduction or disclosure of this document in whole or in part is strictly prohibited.

Bit(s)	Mnemonic	Name	Description
31:16	**SCK_LOW_COUNT**	SCK_LOW_COUNT	**SCK clock low time = (SCK_LOW_COUNT+1)*CLK_PERIOD**
15:0	**SCK_HIGH_COUNT**	SCK_HIGH_COUNT	**SCK clock high time = (SCK_HIGH_COUNT+1)*CLK_PERIOD.**

© 2015 - 2017 MediaTek Inc.

This document contains information that is proprietary to MediaTek Inc. (“MediaTek”) and/or its licensor(s).
Any unauthorized use, reproduction or disclosure of this document in whole or in part is strictly prohibited.

8. Serial Peripheral Interface Slave Controller

8.1. General Description

The SPI (Serial Peripheral Interface) is a bit-serial, four-pin transmission protocol. Figure 8-1 is an example of the connection between the SPI master and SPI slave. The SPI slave controller can be configured by SPI master transmit data, it is a slave responsible of data transmission with the master.

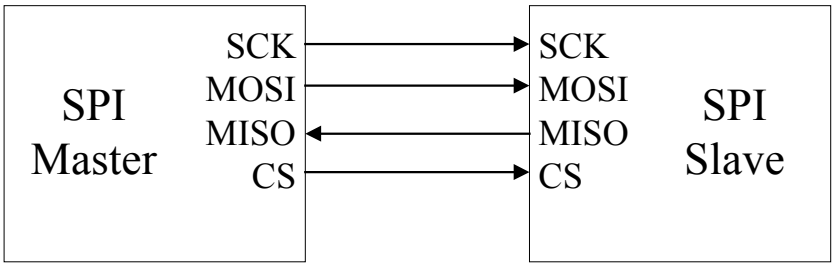

Figure 8-1. Pin connection between SPI master and SPI slave

Figure 7-2 shows the waveform during the SPI transmission. The low active CS_N determines the start point and end point of one transaction. The CS_N setup time, hold time and idle time are also depicted.

CPOL defines the clock polarity in the transmission. Two types of polarity can be adopted, i.e. polarity 0 and polarity 1. Figure 7-2 shows both of the clock polarity (CPOL) as examples.

CPHA defines the legal timing to sample MOSI and MISO. Two different methods can be adopted.

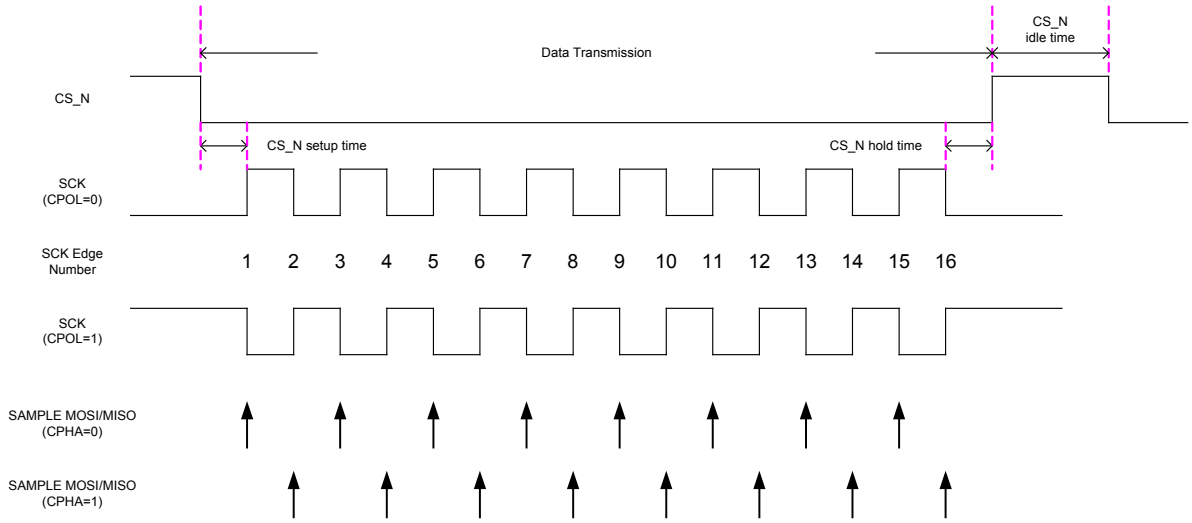

Figure 8-2. SPI transmission formats

Table 8-1. SPI slave controller interface

This document contains information that is proprietary to MediaTek Inc. (“MediaTek”) and/or its licensor(s).
Any unauthorized use, reproduction or disclosure of this document in whole or in part is strictly prohibited.

Signal name	Type	Description
CS	I	Low active chip selection signal
SCK	I	The (bit) serial clock (Max SCK clock rate is 13MHz.)
MOSI	I	Data signal from master output to slave input
MISO	O	Data signal from slave output to master input

8.1.1. Features

The SPI slave controller has eight commands that can be configured by SPI master transmit data. The commands include “power-off”, “power-on”, “configure-write”, “configure-read”, “write-data”, “read-data”, “write-status” and “read-status”. The command waveform is shown in Figure 8-3.

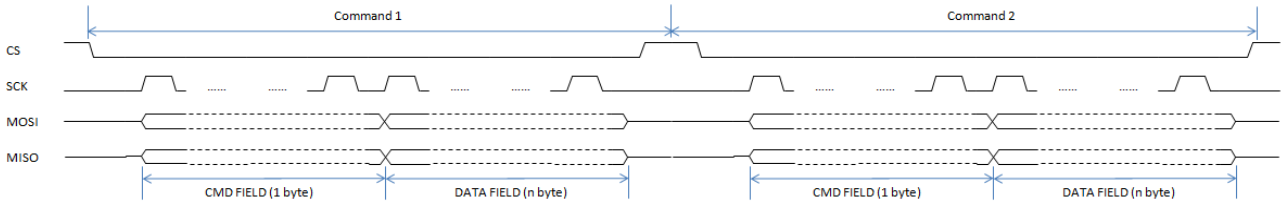

Figure 8-3. SPI slave controller commands waveform

SPI slave control flow

The SPI slave control flow is shown in Figure 8-4 .

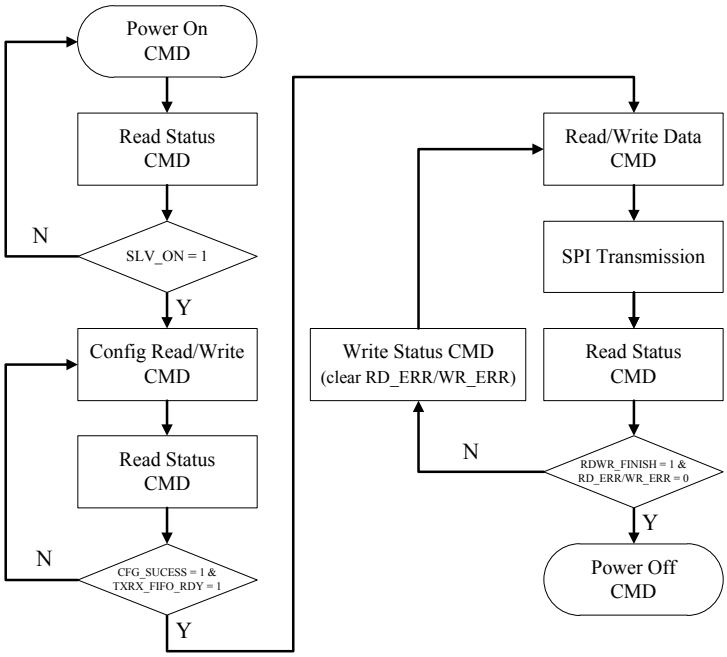

Figure 8-4. SPI slave control flow diagram

© 2015 - 2017 MediaTek Inc.

This document contains information that is proprietary to MediaTek Inc. (“MediaTek”) and/or its licensor(s).
Any unauthorized use, reproduction or disclosure of this document in whole or in part is strictly prohibited.

First, SPI master transmits “power-on” command to turn on SPI slave controller then transmits “config-read/write” command to configure the transfer data length and read/write address of the memory. After SPI slave is configured, it can send/receive data package with SPI master by “read/write-data” command. Finally, use “power-off” command to turn off SPI slave controller. In each state, SPI master transmits “read-status” command to poll SPI slave situation. If SPI master detects error flag bit of state, it should send “write-status” command to clear the bit and poll this bit until it turns low. Detailed descriptions of SPI slave command are shown in Table 8-2 and the SPI slave status in

Table 8-3 .

Table 8-2. SPI slave command description

Cmd field [7:0]	CMD default code	Data field	Usage
Read Data (RD)	8’b81	N bytes. Burst data payload	Master read data
Write Data (WD)	8’h06	N bytes. Burst data payload	Master write data
Read Status (RS)	8’h0A	1 byte	Master reads slave status register
Write Status (WS)	8’h08	1 byte	Master writes slave status register to clear error bit (i.e. write 1 to clear).
Config Read (CR)	8‘h02	4 bytes addr, 4 bytes data length	Master configure slave to start read data.
Config Write (CW)	8’h04	4 bytes addr, 4 bytes data length	Master configures slave to start write data.
Power On (PWRO)	8’h0E	0 byte	Master uses this configure CMD to wake up system and tell MCU to turn on SLAVE.
Power Off (PWRF)	8’h0C	0 byte	Master uses this configure CMD to wake up system and tell MCU to turn off SLAVE.

Table 8-3. SPI slave status description (use RS command to poll SPI slave status)

Function	Bit	Usage	Interrupt source
SLV_ON	0	Master polls this bit until slave is on after sending POWERON CMD.	N
SR_CFG_SUCCESS	1	Master checks this bit to know if CW/CR command is successful.	N
SR_TXRX_FIFO_RDY	2	If master configures read/write, when slave is ready to send/receive data, the master can send RD/WD command. Clean: After SPI slave receives CR/CW command.	N
SR_RD_ERR	3	After a RD command, master can read this bit to know if there is error in the read transfer. If there is error, master should send WS command to clear this bit and poll this bit until this bit turns 0.	Y
SR_WR_ERR	4	After a WD command, master can read this bit to know if there is error in the write transfer. If there is error, master should send WS command to clear this bit and poll this bit until this bit turns 0.	Y
SR_RDWR_FINISH	5	After RD/WD transaction, master can poll this bit to know if the	Y

© 2015 - 2017 MediaTek Inc.

This document contains information that is proprietary to MediaTek Inc. (“MediaTek”) and/or its licensor(s).
Any unauthorized use, reproduction or disclosure of this document in whole or in part is strictly prohibited.

Function	Bit	Usage	Interrupt source
		read/write transfer is finished. Clean: After SPI slave receives CR/CW command.	
SR_TIMOUT_ERR	6	Indicates SPI slave does not receive or send data for some time. If there is error, master should send WS command to clear this bit and poll this bit until this bit turns 0.	Y
SR_CMD_ERR	7	If master sends an error CMD at the first byte, master can know the error status through the received data. Clean: After SPI slave receives correct command.	N

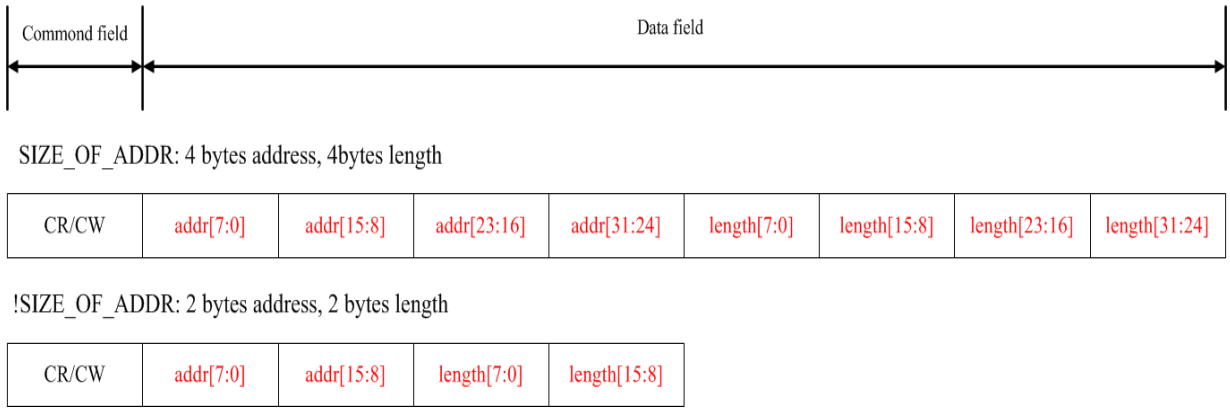

Figure 8-5. Config read/write (CR/CW) command format

The features of the SPI slave controller are:

- Configurable transmitting and receiving bit order
- The SPI slave controller automatically fetches the transmitted data (to be put on the MISO line) from memory.
- The SPI slave controller automatically stores the received data (from MOSI line) to memory.
- Programmable byte length for transmission
- Adjustable time out interrupt threshold, if the time that SPI slave does not receive or send data is exceeded.

© 2015 - 2017 MediaTek Inc.

This document contains information that is proprietary to MediaTek Inc. (“MediaTek”) and/or its licensor(s).
Any unauthorized use, reproduction or disclosure of this document in whole or in part is strictly prohibited.

8.1.2. Block Diagram

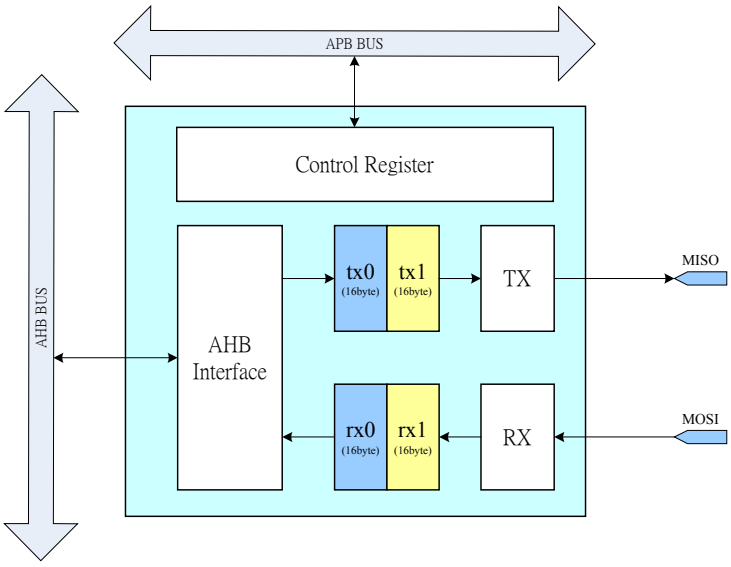

Figure 8-6. Block diagram of SPI slave controller

8.2. Register Definition

There is one SPI slave controller in this SOC. The usage of the registers below is the same except that the base address should be changed to respective one.

Module name: SPISLV Base address: (+A0150000h)

Address	Name	Width	Register Function
A0150000	SPISLV_TRANS_TYPE	32	SPISLV Transfer Information Register
A0150004	SPISLV_TRANS_LENGTH	32	SPISLV Transfer Length Register
A0150008	SPISLV_TRANS_ADDR	32	SPISLV Transfer Address Register
A015000C	SPISLV_CTRL	32	SPISLV Control Register
A0150010	SPISLV_STATUS	32	SPISLV Status Register
A0150014	SPISLV_TIMOUT_THR	32	SPISLV Timeout Threshold Register
A0150018	SPISLV_SW_RST	32	SPISLV SW Reset Register
A015001C	SPISLV_BUFFER_BASE_ADDR	32	SPISLV Buffer Base Address Register
A0150020	SPISLV_BUFFER_SIZE	32	SPISLV Buffer Size Register
A0150024	SPISLV_IRQ	32	SPISLV IRQ Register
A0150028	SPISLV_MISO_EARLY_HALF_SCK	32	SPISLV MISO EARLY HALF SCK Register
A015002C	SPISLV_CMD_DEFINE0	32	SPISLV Command0 Define
A0150030	SPISLV_CMD_DEFINE1	32	SPISLV Command1 Define

© 2015 - 2017 MediaTek Inc.

This document contains information that is proprietary to MediaTek Inc. ("MediaTek") and/or its licensor(s).
Any unauthorized use, reproduction or disclosure of this document in whole or in part is strictly prohibited.

A0150000 SPISLV_TRANS_TYPE SPISLV Transfer Information Register 00002000

Bit	31	30	29	28	27	26	25	24	23	22	21	20	19	18	17	16
Name																
Type																
Reset																
Bit	15	14	13	12	11	10	9	8	7	6	5	4	3	2	1	0
Name						DBG_AHB_STATUS		DIR	CMD_RECEIVED							
Type						RO		RO	RO							
Reset						1	0	0	0	0	0	0	0	0	0	0

Bit(s)	Mnemonic	Name	Description
10:9	**DBG_AHB_STATUS**	DBG_AHB_STATUS	10: IDLE 00: BUST transfer 01: SINGLE WORD transfer 11: SINGLE BYTE transfer
8	**DIR**	DIR	DIR=1: DMA write memory DIR=0: DMA read memory
7:0	**CMD_RECEIVED**	CMD_RECEIVED	**Command spislv receives**

A0150004 SPISLV_TRANS_LENGTH SPISLV Transfer Length Register 00000001

Bit	31	30	29	28	27	26	25	24	23	22	21	20	19	18	17	16
Name	TRANS_LENGTH[31:16]															
Type	RO															
Reset	0	0	0	0	0	0	0	0	0	0	0	0	0	0	0	0
Bit	15	14	13	12	11	10	9	8	7	6	5	4	3	2	1	0
Name	TRANS_LENGTH[15:0]															
Type	RO															
Reset	0	0	0	0	0	0	0	0	0	0	0	0	0	0	0	1

Bit(s)	Mnemonic	Name	Description
31:0	**TRANS_LENGTH**	TRANS_LENGTH	**Transfer length which SPI master has configured** 1: 1 byte transfer n: n byte transfer

A0150008 SPISLV_TRANS_ADDR SPISLV Transfer Address Register 00000000

Bit	31	30	29	28	27	26	25	24	23	22	21	20	19	18	17	16
Name	TRANS_ADDR[31:16]															
Type	RO															
Reset	0	0	0	0	0	0	0	0	0	0	0	0	0	0	0	0
Bit	15	14	13	12	11	10	9	8	7	6	5	4	3	2	1	0
Name	TRANS_ADDR[15:0]															
Type	RO															
Reset	0	0	0	0	0	0	0	0	0	0	0	0	0	0	0	0

Bit(s)	Mnemonic	Name	Description
31:0	**TRANS_ADDR**	TRANS_ADDR	**Transfer address which SPI master has configured**

© 2015 - 2017 MediaTek Inc.

This document contains information that is proprietary to MediaTek Inc. ("MediaTek") and/or its licensor(s).
Any unauthorized use, reproduction or disclosure of this document in whole or in part is strictly prohibited.

A015000C SPISLV_CTRL SPISLV Control Register **00010000**

Bit	31	30	29	28	27	26	25	24	23	22	21	20	19	18	17	16
Name																POWER_ON_INT_EN
Type																RW
Reset																1
Bit	15	14	13	12	11	10	9	8	7	6	5	4	3	2	1	0
Name	SW_DECODE_ADDRESS_EN	TX_DMA_SW_READY	RX_DMA_SW_READY	TXMSBF	RXMSBF	POWER_OFF_INT_EN	WR_CFG_FINISH_INT_EN	RD_CFG_FINISH_INT_EN	RD_TRANS_FINISH_INT_EN	TMOUT_ERR_INT_EN	WR_TRANS_FINISH_INT_EN	WR_DATA_ERR_INT_EN	RD_DATA_ERR_INT_EN	CPOL	CPHA	SIZE_OF_ADDR
Type	RW	RW	RW	RW	RW	RW	RW	RW	RW	RW	RW	RW	RW	RW	RW	RW
Reset	0	0	0	0	0	0	0	0	0	0	0	0	0	0	0	0

Bit(s)	Mnemonic	Name	Description
16	**POWER_ON_INT_EN**	POWER_ON_INT_EN	**Defines POWER ON command IRQ enable.**
15	**SW_DECODE_ADDRESS_EN**	SW_DECODE_ADDRESS_EN	**Indicates whether software decode address is sent by SPI master** 0: SW will not decode address. HW should judge whether master is configured successfully. 1: SW will decode address. HW does not need to judge whether master is configured successfully.
14	**TX_DMA_SW_READY**	TX_DMA_SW_READY	**Indicates SW has received IRQ after SPI master sends CR/RD CMD and configures data, prepares TX DATA and configures DMA address; HW can start TX DMA transfer**
13	**RX_DMA_SW_READY**	RX_DMA_SW_READY	**Indicates SW has received IRQ after SPI master sends CW/WR CMD and configures data, configures DMA address; HW can start RX DMA transfer**
12	**TXMSBF**	TXMSBF	**Indicates the data sent on MISO line is MSB first or not** Set RXMSBF to 1 for MSB first; otherwise set it to 0.
11	**RXMSBF**	RXMSBF	**Indicates the data received from MOSI line is MSB first or not** Set TXMSBF to 1 for MSB first; otherwise set it to 0.
10	**POWER_OFF_INT_EN**	POWER_OFF_INT_EN	**Defines POWER OFF command IRQ enable**
9	**WR_CFG_FINISH_INT_EN**	CW_FINISH_INT_EN	**Defines CW configure finishing IRQ enable**
8	**RD_CFG_FINISH_INT_EN**	CR_FINISH_INT_EN	**Defines CR configure finishing IRQ enable**
7	**RD_TRANS_FINISH_INT_EN**	RD_TRANS_FINISH_INT_EN	**Defines RD data finishing IRQ enable**
6	**TMOUT_ERR_INT_EN**	TMOUT_ERR_INT_EN	**Defines TIMEOUT IRQ enable**
5	**WR_TRANS_FINISH_INT_EN**	WR_TRANS_FINISH_INT_EN	**Defines WR data finishing IRQ enable**
4	**WR_DATA_ERR_INT**	WR_DATA_ERR_INT_EN	**Defines WR data error IRQ enable**

© 2015 - 2017 MediaTek Inc.

This document contains information that is proprietary to MediaTek Inc. ("MediaTek") and/or its licensor(s).
Any unauthorized use, reproduction or disclosure of this document in whole or in part is strictly prohibited.

Bit(s)	Mnemonic	Name	Description
	_EN		
3	**RD_DATA_ERR_INT_EN**	RD_DATA_ERR_INT_EN	**Defines RD data error IRQ enable**
2	**CPOL**	CPOL	**Control bit of the SCK polarity** 0: CPOL = 0 1: CPOL = 1
1	**CPHA**	CPHA	**Defines SPI Clock Format 0 or SPI Clock Format 1 during transmission** 0: CPHA = 0 1: CPHA = 1
0	**SIZE_OF_ADDR**	SIZE_OF_ADDR	**Defines CW/CR command format** 0: Data filed includes 2 byte transfer address and 2 byte transfer length. 1: Data filed includes 4 byte transfer address & and byte transfer length.

A0150010 **SPISLV_STATUS** **SPISLV Status Register** **00000000**

Bit	31	30	29	28	27	26	25	24	23	22	21	20	19	18	17	16
Name																
Type																
Reset																
Bit	15	14	13	12	11	10	9	8	7	6	5	4	3	2	1	0
Name			**SR_POWER_ON**	**SR_POWER_OFF**	**SR_WR_FINISH**	**SR_RD_FINISH**	**SR_CFG_WRITE_FINISH**	**SR_CFG_READ_FINISH**	**SR_CMD_ERROR**	**SR_TIMOUT_ERR**	**SR_RDWR_FINISH**	**SR_WR_ERR**	**SR_RD_ERR**	**SR_TXRX_FIFO_RDY**	**SR_CFG_SUCESS**	**SLV_ON**
Type			RO	RO	RO	RO	RO	RO	RO	RO	RO	RO	RO	RO	RO	RW
Reset			0	0	0	0	0	0	0	0	0	0	0	0	0	0

Bit(s)	Mnemonic	Name	Description
13	**SR_POWER_ON**	SR_POWER_ON	**Indicates whether SPI SLAVE receives power-on command** Cleared after SLV_ON = 0.
12	**SR_POWER_OFF**	SR_POWER_OFF	**Indicates whether SPI SLAVE receives power-off command** Cleared after SLV_ON = 1.
11	**SR_WR_FINISH**	SR_WR_FINISH	**Indicates whether SPI SLAVE write data is finished** Cleared after the next CFG read/write.
10	**SR_RD_FINISH**	SR_RD_FINISH	**Indicates whether SPI SLAVE read data is finished** Cleared after the next CFG read/write.
9	**SR_CFG_WRITE_FINISH**	SR_CFG_WRITE_FINISH	**Indicates whether SPI receive CFG READ CMD is finished** Cleared after sw_rx_dma_ready.
8	**SR_CFG_READ_FINISH**	SR_CFG_READ_FINISH	**Indicates whether SPI receive CFG READ CMD is finished** Cleared after sw_tx_dma_ready.
7	**SR_CMD_ERROR**	SR_CMD_ERROR	**Indicates whether SPI master sends an error command** Used for SPI master to debug; cleared after SPI master sends a correct command.
6	**SR_TIMOUT_ERR**	SR_TIMOUT_ERR	**Indicates time-out and SPI slave does not receive or send data for some time** If there is error, master must send WS command to clear this bit and poll this bit until this bit turns to 0.
5	**SR_RDWR**	SR_RDWR_FINISH	**Indicates whether SPI master RD/WR is finished**

© 2015 - 2017 MediaTek Inc.

This document contains information that is proprietary to MediaTek Inc. ("MediaTek") and/or its licensor(s).
Any unauthorized use, reproduction or disclosure of this document in whole or in part is strictly prohibited.

Bit(s)	Mnemonic	Name	Description
	_FINISH		After the master receives/sends all data, it can poll this bit to know if the read/write transfer is finished. Cleared after SPI slave receives CR/CW command.
4	**SR_WR_ERR**	SR_WR_ERR	**Indicates SPI master WR error** After a RD command, master can read this bit to know if there is error in the write transfer through RS. If there is error, master must send WS command to clear this bit and poll this bit until this bit turns to 0
3	**SR_RD_ERR**	SR_RD_ERR	**Indicates SPI master RD error** After a RD command, master can read this bit to know if there is error in the read transfer through RS. If there is error, master must send WS command to clear this bit and poll this bit until this bit turns to 0.
2	**SR_TXRX_FIFO_RDY**	SR_TXRX_FIFO_RDY	**Indicates TX/RX FIFO ready** When CR, this bit used to indicate whether TX FIFO is ready. Master polls this bit to know if the slave is ready to send data, then master can send RD command. When CW, this bit used to indicate whether RX FIFO is ready. Master polls this bit to know if the slave is ready to send data, then master can send WD command. This bit will be cleared after SPI slave receives CR/CW command.
1	**SR_CFG_SUCESS**	SR_CFG_SUCESS	**Indicates whether SPI master is configured successfully.** Master checks this bit to know if CW/CR command is successful.
0	**SLV_ON**	SLV_ON	**Defines SPI slave on** Master polls this bit until the slave is on.

A0150014 SPISLV_TIMOUT_THR SPISLV Timeout Threshold Register 000000FF

Bit	31	30	29	28	27	26	25	24	23	22	21	20	19	18	17	16
Name	SPI_TIMOUT_THR[31:16]															
Type	RW															
Reset	0	0	0	0	0	0	0	0	0	0	0	0	0	0	0	0
Bit	15	14	13	12	11	10	9	8	7	6	5	4	3	2	1	0
Name	SPI_TIMOUT_THR[15:0]															
Type	RW															
Reset	0	0	0	0	0	0	0	0	1	1	1	1	1	1	1	1

Bit(s)	Mnemonic	Name	Description
31:0	**SPI_TIMOUT_THR**	TIMOUT_THR	**Timeout threshold time** If the time that SPI slave does not receive or send data is exceeded, there will be a timeout IRQ.

A0150018 SPISLV_SW_RST SPISLV SW Reset Register 00000000

Bit	31	30	29	28	27	26	25	24	23	22	21	20	19	18	17	16
Name																
Type																
Reset																
Bit	15	14	13	12	11	10	9	8	7	6	5	4	3	2	1	0
Name																SPI_SW_RST
Type																RW
Reset																0

© 2015 - 2017 MediaTek Inc.

This document contains information that is proprietary to MediaTek Inc. ("MediaTek") and/or its licensor(s).
Any unauthorized use, reproduction or disclosure of this document in whole or in part is strictly prohibited.

Bit(s)	Mnemonic	Name	Description
0	**SPI_SW_RST**	SW_RST	**Software reset bit; resets the state machine and data FIFO of SPI controller. When this bit is 1, software reset is active high. The default value is 0.**

A015001C **SPISLV_BUFFER_BASE_ADDR** **SPISLV Buffer Base Address Register** **00000000**

Bit	31	30	29	28	27	26	25	24	23	22	21	20	19	18	17	16
Name	SPI_BUFFER_BASE_ADDR[31:16]															
Type	RW															
Reset	0	0	0	0	0	0	0	0	0	0	0	0	0	0	0	0
Bit	15	14	13	12	11	10	9	8	7	6	5	4	3	2	1	0
Name	SPI_BUFFER_BASE_ADDR[15:0]															
Type	RW															
Reset	0	0	0	0	0	0	0	0	0	0	0	0	0	0	0	0

Bit(s)	Mnemonic	Name	Description
31:0	**SPI_BUFFER_BASE_ADDR**	BUFFER_BASE_ADDR	Configurable DMA address to access memory

A0150020 **SPISLV_BUFFER_SIZE** **SPISLV Buffer Size Register** **00000000**

Bit	31	30	29	28	27	26	25	24	23	22	21	20	19	18	17	16
Name	SPI_BUFFER_SIZE[31:16]															
Type	RW															
Reset	0	0	0	0	0	0	0	0	0	0	0	0	0	0	0	0
Bit	15	14	13	12	11	10	9	8	7	6	5	4	3	2	1	0
Name	SPI_BUFFER_SIZE[15:0]															
Type	RW															
Reset	0	0	0	0	0	0	0	0	0	0	0	0	0	0	0	0

Bit(s)	Mnemonic	Name	Description
31:0	**SPI_BUFFER_SIZE**	BUFFER_SIZE	Configurable BUFFER size indicating whether SPI master is configured successfully

A0150024 **SPISLV_IRQ** **SPISLV IRQ Register** **00000000**

Bit	31	30	29	28	27	26	25	24	23	22	21	20	19	18	17	16
Name																
Type																
Reset																
Bit	15	14	13	12	11	10	9	8	7	6	5	4	3	2	1	0
Name								**SR_TIMOUT_ERR_IRQ**	**SR_WR_ERR_IRQ**	**SR_RD_ERR_IRQ**	**SR_PWRON_IRQ**	**SR_PWROFF_IRQ**	**SR_WR_FINISH_IRQ**	**SR_RD_FINISH_IRQ**	**SR_CWR_FINISH_IRQ**	**SR_CRD_FINISH_IRQ**
Type								RC	RC	RC	RO	RC	RC	RC	RC	RC
Reset								0	0	0	0	0	0	0	0	0

Bit(s)	Mnemonic	Name	Description
8	**SR_TIMOUT_ERR_IR**	SR_TIMOUT_ERR_IRQ	**Indicates timeout IRQ** Read clear

© 2015 - 2017 MediaTek Inc.
This document contains information that is proprietary to MediaTek Inc. ("MediaTek") and/or its licensor(s).
Any unauthorized use, reproduction or disclosure of this document in whole or in part is strictly prohibited.

Bit(s)	Mnemonic	Name	Description
	Q		
7	**SR_WR_ERR_IRQ**	SR_WR_ERR_IRQ	**Indicates SPI master WR error IRQ** Read clear
6	**SR_RD_ERR_IRQ**	SR_RD_ERR_IRQ	**Indicates SPI master RD error IRQ** Read clear
5	**SR_PWRON_IRQ**	SR_PWRON_IRQ	**Indicates slave receiving power-on IRQ** Cleared by SLV_ON = 1
4	**SR_PWROFF_IRQ**	SR_PWROFF_IRQ	**Indicates receiving power-off CMD IRQ** Read clear
3	**SR_WR_FINISH_IRQ**	SR_WR_FINISH_IRQ	**Indicates SPI master WR is finished** Read clear
2	**SR_RD_FINISH_IRQ**	SR_RD_FINISH_IRQ	**Indicates SPI master RD finished IRQ** Read clear
1	**SR_CWR_FINISH_IRQ**	SR_CWR_FINISH_IRQ	**Indicates SPI master configure write transfer finished IRQ** Read clear
0	**SR_CRD_FINISH_IRQ**	SR_CRD_FINISH_IRQ	**Indicates SPI master configure read transfer finished IRQ** Read clear

A0150028 **SPISLV_MISO_EARLY_HALF_SCK** **SPISLV MISO EARLY HALF SCK Register** **00000000**

Bit	31	30	29	28	27	26	25	24	23	22	21	20	19	18	17	16
Name																
Type																
Reset																
Bit	15	14	13	12	11	10	9	8	7	6	5	4	3	2	1	0
Name																**SPI_MISO_EARLY_HALF_SCK**
Type																RW
Reset																0

Bit(s)	Mnemonic	Name	Description
0	**SPI_MISO_EARLY_HALF_SCK**	MISO_EARLY_HALF_SCK	**Defines whether to send miso early harf sck cycle** Used for improving SPI timing

A015002C **SPISLV_CMD_DEFINE0** **SPISLV Commando Define** **080A0681**

Bit	31	30	29	28	27	26	25	24	23	22	21	20	19	18	17	16
Name	**CMD_WS**								**CMD_RS**							
Type	RW								RW							
Reset	0	0	0	0	1	0	0	0	0	0	0	0	1	0	1	0
Bit	15	14	13	12	11	10	9	8	7	6	5	4	3	2	1	0
Name	**CMD_WR**								**CMD_RD**							
Type	RW								RW							
Reset	0	0	0	0	0	1	1	0	1	0	0	0	0	0	0	1

© 2015 - 2017 MediaTek Inc.

This document contains information that is proprietary to MediaTek Inc. ("MediaTek") and/or its licensor(s).
Any unauthorized use, reproduction or disclosure of this document in whole or in part is strictly prohibited.

Bit(s)	Mnemonic	Name	Description
31:24	**CMD_WS**	CMD_WS	**Defines Write Status (WR) command value**
23:16	**CMD_RS**	CMD_RS	**Defines Read Status (RS) command value**
15:8	**CMD_WR**	CMD_WR	**Defines Write Data (WR) command value**
7:0	**CMD_RD**	CMD_RD	**Defines Read Data (RD) command value**

A0150030 **SPISLV_CMD_DEFINE1** **SPISLV Command1 Define** **0C0E0402**

Bit	31	30	29	28	27	26	25	24	23	22	21	20	19	18	17	16
Name	**CMD_POWEROFF**								**CMD_POWERON**							
Type	RW								RW							
Reset	0	0	0	0	1	1	0	0	0	0	0	0	1	1	1	0
Bit	15	14	13	12	11	10	9	8	7	6	5	4	3	2	1	0
Name	**CMD_CW**								**CMD_CR**							
Type	RW								RW							
Reset	0	0	0	0	0	1	0	0	0	0	0	0	0	0	1	0

Bit(s)	Mnemonic	Name	Description
31:24	**CMD_POWEROFF**	CMD_POWEROFF	**Defines power-off command value**
23:16	**CMD_POWERON**	CMD_POWERON	**Defines power-on command value**
15:8	**CMD_CW**	CMD_CW	**Defines Configure Write (CW) command value**
7:0	**CMD_CR**	CMD_CR	**Defines Configure Read (CR) command value**

© 2015 - 2017 MediaTek Inc.

This document contains information that is proprietary to MediaTek Inc. (“MediaTek”) and/or its licensor(s).
Any unauthorized use, reproduction or disclosure of this document in whole or in part is strictly prohibited.

9. Inter-Integrated Circuit Controller

9.1. General Description

Inter-Integrated Circuit (I2C) is a two-wire serial interface. The two signals are SCL and SDA. SCL is a clock signal driven by the master. SDA is a bi-directional data signal that can be driven by either the master or the slave. This generic controller supports the master role and conforms to the I2C specification.

9.1.1. Feature

- I2C compliant master mode operation
- Adjustable clock speed for LS/FS mode operation
- Supports 7-bit/10-bit addressing
- Supports high-speed mode
- Supports slave clock extension
- Supports DMA mode
- START/STOP/REPEATED START condition
- Manual/DMA transfer mode
- Multi-write per transfer (up to 15 data bytes)
- Multi-read per transfer (up to 15 data bytes)
- Multi-transfer per transaction
- Combined format transfer with length change capability
- Active drive/wired-and I/O configuration

9.1.2. Manual/DMA Transfer Mode

The controller offers two types of transfer mode, manual and DMA.

When manual mode is selected, in addition to the slave address register, the controller has a built-in 8-byte deep FIFO which allows MCU to prepare up to eight bytes of data for a write transfer, or read up to eight bytes of data for a read transfer.

When DMA mode is enabled, the data to and from the FIFO is controlled via DMA transfer and therefore supports up to 15 bytes of consecutive read or write, with the data read from or write to another memory space. When DMA mode is enabled, the flow control mechanism is also implemented to hold the bus clk when FIFO underflow or overflow condition is encountered.

© 2015 - 2017 MediaTek Inc.

This document contains information that is proprietary to MediaTek Inc. (“MediaTek”) and/or its licensor(s).
Any unauthorized use, reproduction or disclosure of this document in whole or in part is strictly prohibited.

9.1.3. Transfer Format Support

This controller is designed to be as generic as possible to support a wide range of devices that may utilize different combinations of transfer formats. Here are the transfer format types that can be supported through different software configurations.

Wording convention note

- Transfer = Anything encapsulated within a Start and Stop or Repeated Start.
- Transfer length = Number of bytes within the transfer
- Transaction = This is the top unit. Everything combined equals one transaction.
- Transaction length = Number of transfers to be conducted.

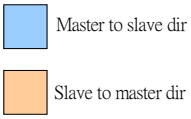

Single-byte access

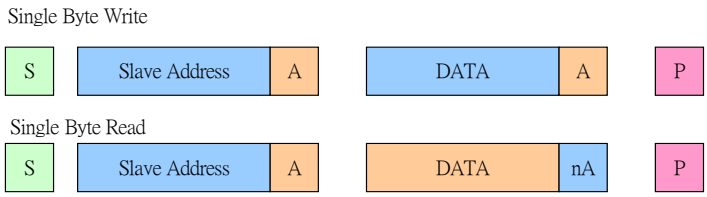

Multi-byte access

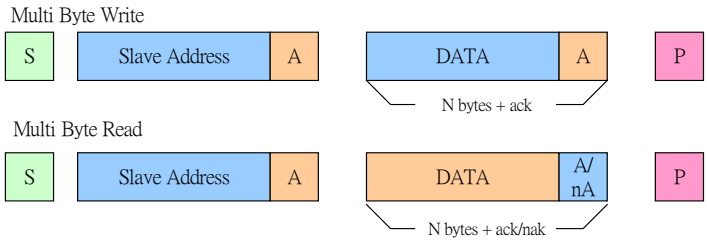

© 2015 - 2017 MediaTek Inc.

This document contains information that is proprietary to MediaTek Inc. (“MediaTek”) and/or its licensor(s).
Any unauthorized use, reproduction or disclosure of this document in whole or in part is strictly prohibited.

Multi-byte transfer + multi-transfer (same direction)

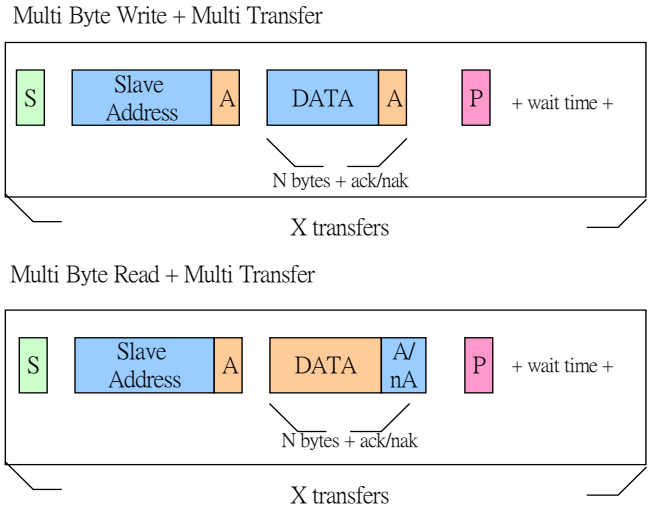

Multi-byte transfer + multi-transfer w RS (same direction)

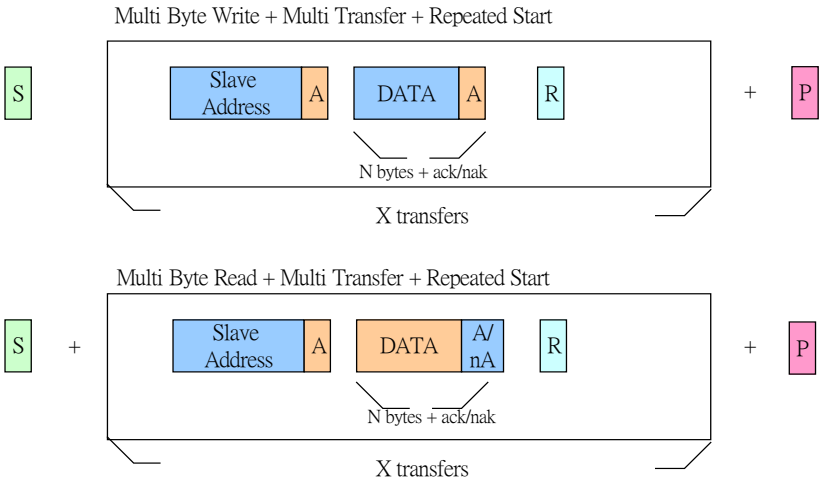

Combined write/read with Repeated Start (direction change)

Note:

1. Only supports write and then read sequence. Read and then write is not supported.

2. In this format, transaction is 2

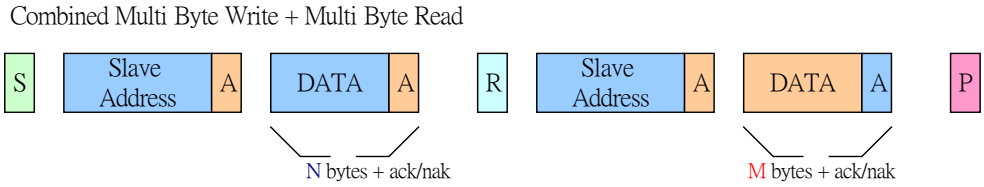

© 2015 - 2017 MediaTek Inc.

This document contains information that is proprietary to MediaTek Inc. ("MediaTek") and/or its licensor(s).
Any unauthorized use, reproduction or disclosure of this document in whole or in part is strictly prohibited.

9.1.4. Programming Guide

Common transfer programmable parameters

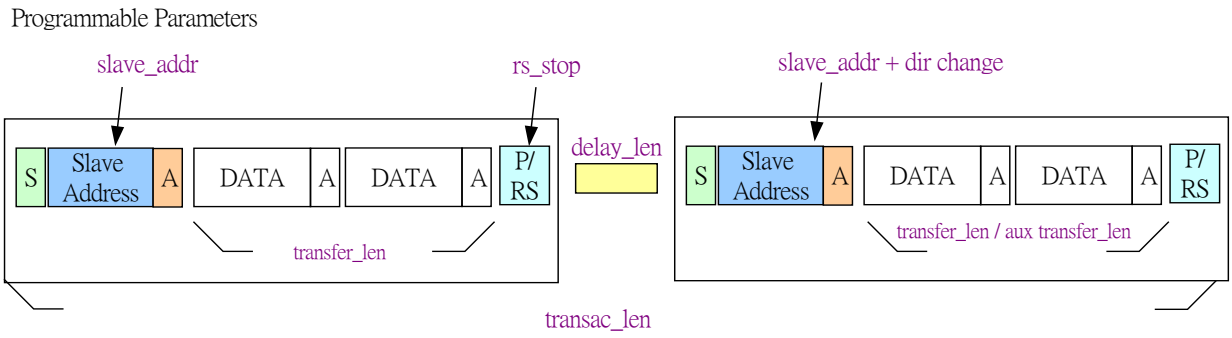

Output waveform timing programmable parameters

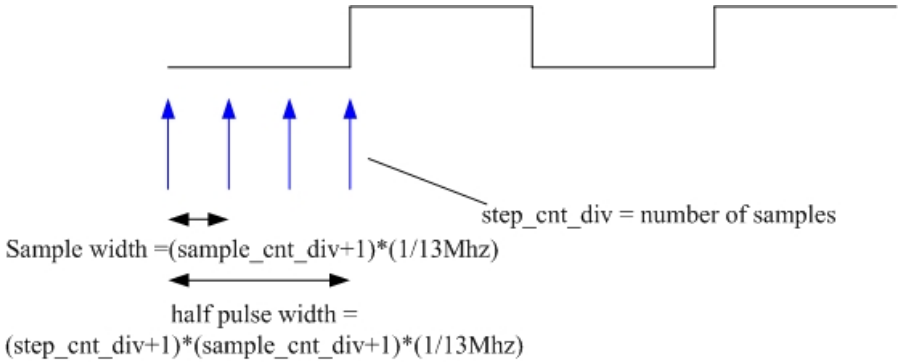

9.2. Register Definition

There are four I2C channels in this SOC.

I2C number	Base address	Feature	Source clock
I2C0	0xA0210000	Supports DMA mode	Fix 26M
I2C1	0xA0220000	Supports DMA mode	Fix 26M
I2C2	0xA01B0000	Does not support DMA mode	Bus clock
I2C_d2d	0xA2150000	Does not support DMA mode	Bus clock

© 2015 - 2017 MediaTek Inc.

This document contains information that is proprietary to MediaTek Inc. ("MediaTek") and/or its licensor(s).
Any unauthorized use, reproduction or disclosure of this document in whole or in part is strictly prohibited.

Module name: I2C_SCCB_Controller base address: (+A0210000)

Address	Name	Width	Register function
A0210000	**DATA_PORT**	16	Data port register
A0210004	**SLAVE_ADDR**	16	Slave address register
A0210008	**INTR_MASK**	16	**Interrupt mask register** This register provides masks for the corresponding interrupt sources as indicated in the intr_stat register. 1 = Allow interrupt 0 = Disable interrupt *Note: When disabled, the corresponding interrupt will not be asserted; however intr_stat will still be updated with the status, i.e. mask does not affect intr_stat register values.*
A021000C	**INTR_STAT**	16	**Interrupt status register** When an interrupt is issued by the I2C controller, this register will need to be read by MCU to determine the cause for the interrupt. After this status is read and appropriate actions are taken, the corresponding interrupt source will need to be written 1 to clear.
A0210010	**CONTROL**	16	Control register
A0210014	**TRANSFER_LEN**	16	Transfer length register (number of bytes per transfer)
A0210018	**TRANSAC_LEN**	16	Transaction length register (number of transfers per transaction)
A021001C	**DELAY_LEN**	16	Inter delay length register
A0210020	**TIMING**	16	**Timing control register** LS/FS only. This register is used to control the output waveform timing. Each half pulse width, i.e. each high or low pulse, is equal to (step_cnt_div+1)*(sample_cnt_div + 1)/13MHz
A0210024	**START**	16	Start register
A021002C	**CLOCK_DIV**	16	Clock divergence of I2C source clock
A0210030	**FIFO_STAT**	16	FIFO status register
A0210038	**FIFO_ADDR_CLR**	16	FIFO address clear register
A0210040	**IO_CONFIG**	16	**IO config register** This register is used to configure the I/O for the SDA and SCL lines to select between normal I/O mode, or open-drain mode to support wired-and bus.
A0210048	**HS**	16	**High speed mode register** This register contains options for supporting high speed operation features. Each HS half pulse width, i.e. each high or low pulse, is equal to (step_cnt_div+1)*(sample_cnt_div + 1)/13MHz
A0210050	**SOFTRESET**	16	Soft reset register
A0210060	**SPARE**	16	SPARE
A0210064	**DEBUGSTAT**	16	Debug status register
A0210068	**DEBUGCTRL**	16	Debug control register
A021006C	**TRANSFER_LEN_**	16	Transfer length register (number of bytes per

© 2015 - 2017 MediaTek Inc.

This document contains information that is proprietary to MediaTek Inc. ("MediaTek") and/or its licensor(s).
Any unauthorized use, reproduction or disclosure of this document in whole or in part is strictly prohibited.

Address	Name	Width	Register function
	AUX		transfer)

A0210000 DATA_PORT Data Port Register 0000

Bit	15	14	13	12	11	10	9	8	7	6	5	4	3	2	1	0
Name									DATA_PORT							
Type									RW							
Reset									0	0	0	0	0	0	0	0

Bit(s)	Mnemonic	Name	Description
7:0	**DATA_PORT**	DATA_PORT	**FIFO access port** During master write sequences (slave_addr[0] = 0), this port can be written by APB, and during master read sequences (slave_addr[0] = 1), this port can be read by APB. *Note: Slave_addr must be set correctly before accessing FIFO.* For debugging only: If the fifo_apb_debug bit is set, FIFO can be read and written by the APB.

A0210004 SLAVE_ADDR Slave Address Register 00BF

Bit	15	14	13	12	11	10	9	8	7	6	5	4	3	2	1	0
Name									SLAVE_ADDR							
Type									RW							
Reset									1	0	1	1	1	1	1	1

Bit(s)	Mnemonic	Name	Description
7:0	**SLAVE_ADDR**	SLAVE_ADDR	**Specifies the slave address of the device to be accessed** Bit 0 is defined by the I2C protocol as a bit that indicates the direction of transfer. 0: Master write 1: Master read

A0210008 INTR_MASK Interrupt Mask Register 0007

Bit	15	14	13	12	11	10	9	8	7	6	5	4	3	2	1	0
Name														**MASK_HS_NACKER**	**MASK_ACKERR**	**MASK_TRANSAC_COMP**
Type														RW	RW	RW
Reset														1	1	1

Overview This register provides masks for the corresponding interrupt sources as indicated in intr_stat register. (1 = allow interrupt 0 = disable interrupt) Note that when disabled, the corresponding interrupt will not be asserted; however the intr_stat will still be updated with the status, i.e. mask does not affect intr_stat register values.

Bit(s)	Mnemonic	Name	Description
2	**MASK_HS_NACKER**	MASK_HS_NACKER	**Setting this value to 0 will mask HS_NACKERR interrupt signal.**
1	**MASK_ACKERR**	MASK_ACKERR	**Setting this value to 0 will mask ACK_ERR interrupt signal.**
0	**MASK_TRANSAC_COMP**	MASK_TRANSAC_COMP	**Setting this value to 0 will mask TRANSAC_COMP interrupt signal.**

© 2015 - 2017 MediaTek Inc.

This document contains information that is proprietary to MediaTek Inc. ("MediaTek") and/or its licensor(s).
Any unauthorized use, reproduction or disclosure of this document in whole or in part is strictly prohibited.

A021000C INTR_STAT Interrupt Status Register 0000

Bit	15	14	13	12	11	10	9	8	7	6	5	4	3	2	1	0
Name														HS_NACKERR	ACKERR	TRANSAC_COMP
Type														W1C	W1C	W1C
Reset														0	0	0

Overview When an interrupt is issued by i2c controller, this register will need to be read by mcu to determine the cause for the interrupt. After this status has been read and appropriate actions are taken, the corresponding interrupt source will need to be write 1 cleared.

Bit(s)	Mnemonic	Name	Description
2	**HS_NACKERR**	HS_NACKERR	**This status will be asserted if HS master code nack error detection is enabled. If enabled, HS master code nack err will cause transaction to end and stop will be issued.**
1	**ACKERR**	ACKERR	**This status will be asserted if ACK error detection is enabled. If enabled, ackerr will cause transaction to end and stop will be issued.**
0	**TRANSAC_COMP**	TRANSAC_COMP	**This status will be asserted when a transaction has completed successfully.**

A0210010 CONTROL Control Register 0000

Bit	15	14	13	12	11	10	9	8	7	6	5	4	3	2	1	0
Name										TRANSFER_LEN_CHANGE	ACKERR_DET_EN	DIR_CHANGE	CLK_EXT_EN	DMA_EN	RS_STOP	
Type										RW	RW	RW	RW	RW	RW	
Reset										0	0	0	0	0	0	

Overview

Bit(s)	Mnemonic	Name	Description
6	**TRANSFER_LEN_CHANGE**	TRANSFER_LEN_CHANGE	**This options specifies whether or not to change the transfer length after the fist transfer completes. If enabled, the transfers after the first transfer will use the transfer_len_aux parameter.**
5	**ACKERR_DET_EN**	ACKERR_DET_EN	**This option enables slave ack error detection. When enabled, if slave ack error is detected, the master will terminate the transaction by issuing a STOP condition then assert ackerr interrupt. MCU should handle this case appropriately then reset the FIFO address before reissuing transaction. If this option is disabled, the controller will ignore slave ack error and keep on scheduled transaction.** 0: Disable 1: Enable
4	**DIR_CHANGE**	DIR_CHANGE	**This option is used for combined transfer format, where the direction of transfer is to be changed from write to read after the FIRST RS condition.** **Note: When set to 1, the transfers after the direction change will be based on the transfer_len_aux parameter.** 0: Disable 1: Enable
3	**CLK_EXT_EN**	CLK_EXT_EN	**I2C spec allows slaves to hold the SCL line low if it is not yet ready for further processing. Therefore, if this bit is set to 1,**

© 2015 - 2017 MediaTek Inc.
This document contains information that is proprietary to MediaTek Inc. ("MediaTek") and/or its licensor(s).
Any unauthorized use, reproduction or disclosure of this document in whole or in part is strictly prohibited.

Bit(s)	Mnemonic	Name	Description
			master controller will enter a high wait state until the slave releases the SCL line.
2	**DMA_EN**	DMA_EN	**By default, this is disabled, and FIFO data should be manually prepared by MCU. This default setting should be used for transfer sizes of less than 8 data bytes and no multiple transfer is configured. When enabled, DMA requests will be turned on, and the FIFO data should be prepared in memory.**
1	**RS_STOP**	RS_STOP	**In LS/FS mode, this bit affects multi-transfer transaction only. It controls whether or not REPEATED-START condition is used between transfers. The last ending transfer always ends with a STOP.** In HS mode, this bit must be set to 1. 0: Use STOP 1: Use REPEATED-START

A0210014 TRANSFER_LEN Transfer Length Register (Number of Bytes per Transfer) 0001

Bit	15	14	13	12	11	10	9	8	7	6	5	4	3	2	1	0
Name													TRANSFER_LEN			
Type													RW			
Reset													0	0	0	1

Bit(s)	Mnemonic	Name	Description
3:0	**TRANSFER_LEN**	TRANSFER_LEN	**Indicates the number of data bytes to be transferred in 1 transfer unit (excluding slave address byte)** *Note: The value must be set to be bigger than 1; otherwise no transfer will take place.*

A0210018 TRANSAC_LEN Transaction Length Register (Number of Transfers per Transaction) 0001

Bit	15	14	13	12	11	10	9	8	7	6	5	4	3	2	1	0
Name									TRANSAC_LEN							
Type									RW							
Reset									0	0	0	0	0	0	0	1

Bit(s)	Mnemonic	Name	Description
7:0	**TRANSAC_LEN**	TRANSAC_LEN	**Indicates the number of transfers to be transferred in 1 transaction** *Note: The value must be set to be bigger than 1; otherwise no transfer will take place.*

A021001C DELAY_LEN Inter Delay Length Register 0002

Bit	15	14	13	12	11	10	9	8	7	6	5	4	3	2	1	0
Name									DELAY_LEN							
Type									RW							
Reset									0	0	0	0	0	0	1	0

Bit(s)	Mnemonic	Name	Description
7:0	**DELAY_LEN**	DELAY_LEN	**Sets up wait delay between consecutive transfers when RS_STOP bit is set to 0** Unit: Half the pulse width

© 2015 - 2017 MediaTek Inc.

This document contains information that is proprietary to MediaTek Inc. ("MediaTek") and/or its licensor(s).
Any unauthorized use, reproduction or disclosure of this document in whole or in part is strictly prohibited.

A0210020 TIMING Timing Control Register 00001303

Bit	31	30	29	28	27	26	25	24	23	22	21	20	19	18	17	16
Name																
Type																
Reset																
Bit	15	14	13	12	11	10	9	8	7	6	5	4	3	2	1	0
Name	DATA_READ_ADJ	DATA_READ_TIME				SAMPLE_CNT_DIV					STEP_CNT_DIV					
Type	RW	RW				RW					RW					
Reset	0	0	0	1		0	1	1			0	0	0	0	1	1

Overview LS/FS only. This register is used to control the output waveform timing. Each half pulse width (ie. each high or low pulse) is equal to = step_cnt_div * (sample_cnt_div * f_clock_div Mhz)

Bit(s)	Mnemonic	Name	Description
15	**DATA_READ_ADJ**	DATA_READ_ADJ	**When set to 1, data latch in sampling time during master reads are adjusted according to DATA_READ_TIME value. Otherwise, by default, data is latched in at half of the high pulse width point. This value must be set to less than or equal to half the high pulse width.**
14:12	**DATA_READ_TIME**	DATA_READ_TIME	**This value is valid only when DATA_READ_ADJ is set to 1. This can be used to adjust so that data is latched in at earlier sampling points (assuming data is settled by then)**
10:8	**SAMPLE_CNT_DIV**	SAMPLE_CNT_DIV	**Used for LS/FS only. This adjusts the width of each sample. (sample width = sample_cnt_div*f_clock_div Mhz)**
5:0	**STEP_CNT_DIV**	STEP_CNT_DIV	**Specifies the number of samples per half pulse width (i.e. each high or low pulse)** **Cannot be 0 .**

A0210024 START Start Register 0000

Bit	15	14	13	12	11	10	9	8	7	6	5	4	3	2	1	0
Name																START
Type																RW
Reset																0

Bit(s)	Mnemonic	Name	Description
0	**START**	START	**Starts the transaction on the bus** It is auto de-asserted at the end of the transaction.

A021002C CLOCK_DIV Clock divergence of I2C source clock 0004

Bit	31	30	29	28	27	26	25	24	23	22	21	20	19	18	17	16
Name																
Type																
Reset																
Bit	15	14	13	12	11	10	9	8	7	6	5	4	3	2	1	0
Name														CLOCK_DIV		
Type														RW		
Reset														1	0	0

Overview

© 2015 - 2017 MediaTek Inc.
This document contains information that is proprietary to MediaTek Inc. ("MediaTek") and/or its licensor(s).
Any unauthorized use, reproduction or disclosure of this document in whole or in part is strictly prohibited.

Bit(s)	Mnemonic	Name	Description
2:0	**CLOCK_DIV**	CLOCK_DIV	**f_clock_div = source clock/(CLOCK_DIV + 1)**

A0210030 FIFO_STAT FIFO Status Register 0001

Bit	15	14	13	12	11	10	9	8	7	6	5	4	3	2	1	0
Name	RD_ADDR				WR_ADDR				FIFO_OFFSET						WR_FULL	RD_EMPTY
Type	RO				RU				RU						RO	RO
Reset	0	0	0	0	0	0	0	0	0	0	0	0			0	1

Bit(s)	Mnemonic	Name	Description
15:12	**RD_ADDR**	RD_ADDR	**Current RD address pointer** Only bit [2:0] have physical meanings.
11:8	**WR_ADDR**	WR_ADDR	**Current WR address pointer** Only bit [2:0] have physical meanings.
7:4	**FIFO_OFFSET**	FIFO_OFFSET	**wr_addr[3:0] - rd_addr[3:0]**
1	**WR_FULL**	WR_FULL	**Indicates FIFO is full**
0	**RD_EMPTY**	RD_EMPTY	**Indicates FIFO is empty**

A0210038 FIFO_ADDR_CLR FIFO Address Clear Register 0000

Bit	15	14	13	12	11	10	9	8	7	6	5	4	3	2	1	0
Name																FIFO_ADDR_CLR
Type																WO
Reset																0

Bit(s)	Mnemonic	Name	Description
0	**FIFO_ADDR_CLR**	FIFO_ADDR_CLR	When written 1'b1, a one pulse fifo_addr_clr will be generated to clear the FIFO address to 0.

A0210040 IO_CONFIG IO Config Register 0000

Bit	15	14	13	12	11	10	9	8	7	6	5	4	3	2	1	0
Name													IDLE_OE_EN		SDA_IO_CONFIG	SCL_IO_CONFIG
Type													RW		RW	RW
Reset													0		0	0

Overview: This register is used to configure the I/O for the SDA and SCL lines to select between normal I/O mode or open-drain mode to support wired-and bus.

Bit(s)	Mnemonic	Name	Description
3	**IDLE_OE_EN**	IDLE_OE_EN	0: Does not drive bus in idle state 1: Drive bus in idle state
1	**SDA_IO_C**	SDA_IO_CONFIG	0: Normal tristate I/O mode

© 2015 - 2017 MediaTek Inc.
This document contains information that is proprietary to MediaTek Inc. ("MediaTek") and/or its licensor(s).
Any unauthorized use, reproduction or disclosure of this document in whole or in part is strictly prohibited.

Bit(s)	Mnemonic	Name	Description
	ONFIG		1: Open-drain mode
0	**SCL_IO_CONFIG**	SCL_IO_CONFIG	0: Normal tristate I/O mode 1: Open-drain mode

A0210048 HS High Speed Mode Register 0102

Bit	15	14	13	12	11	10	9	8	7	6	5	4	3	2	1	0
Name		HS_SAMPLE_CNT_DIV				HS_STEP_CNT_DIV				MASTER_CODE					HS_NACKERR_DET_EN	HS_EN
Type		RW				RW				RW					RW	RW
Reset		0	0	0		0	0	1		0	0	0			1	0

Overview: This register contains options for supporting high speed operation features Each HS half pulse width, i.e. each high or low pulse, is equal to (step_cnt_div+1)*(sample_cnt_div + 1)/13MHz.

Bit(s)	Mnemonic	Name	Description
14:12	**HS_SAMPLE_CNT_DIV**	HS_SAMPLE_CNT_DIV	When the high-speed mode is entered after the master code transfer is completed, the sample width will become dependent on this parameter.
10:8	**HS_STEP_CNT_DIV**	HS_STEP_CNT_DIV	When the high-speed mode is entered after the master code transfer is completed, the number of samples per half pulse width will become dependent on this value.
6:4	**MASTER_CODE**	MASTER_CODE	This is the 3 bit programmable value for the master code to be transmitted.
1	**HS_NACKERR_DET_EN**	HS_NACKERR_DET_EN	**Enables NACKERR detection during the master code transmission** When enabled, if NACK is not received after the master code is transmitted, the transaction will be terminated with a STOP condition.
0	**HS_EN**	HS_EN	**Enables high-speed transaction** *Note: rs_stop must be set to 1.*

A0210050 SOFTRESET Soft Reset Register 0000

Bit	15	14	13	12	11	10	9	8	7	6	5	4	3	2	1	0
Name																SOFT_RESET
Type																WO
Reset																0

Bit(s)	Mnemonic	Name	Description
0	**SOFT_RESET**	SOFT_RESET	When written 1'b1, a one pulse soft reset will be used as synchronous reset to reset the I2C internal hardware circuits.

A0210060 SPARE SPARE 0000

Bit	15	14	13	12	11	10	9	8	7	6	5	4	3	2	1	0
Name													SPARE			
Type													RW			
Reset													0	0	0	0

Bit(s)	Mnemonic	Name	Description

© 2015 - 2017 MediaTek Inc.

This document contains information that is proprietary to MediaTek Inc. ("MediaTek") and/or its licensor(s).
Any unauthorized use, reproduction or disclosure of this document in whole or in part is strictly prohibited.

Bit(s)	Mnemonic	Name	Description
3:0	**SPARE**	SPARE	Reserved for future use

A0210064 DEBUGSTAT Debug Status Register 0020

Bit	15	14	13	12	11	10	9	8	7	6	5	4	3	2	1	0
Name									**BUS_BUSY**	**MASTER_WRITE**	**MASTER_READ**	**MASTER_STATE**				
Type									RO	RO	RO	RO				
Reset									0	0	1	0	0	0	0	0

Bit(s)	Mnemonic	Name	Description
7	**BUS_BUSY**	SPARE	**Reserved**
6	**MASTER_WRITE**	MASTER_WRITE	**For debugging only** 1: Current transfer is in the master write dir.
5	**MASTER_READ**	MASTER_READ	**For debugging only** 1: Current transfer is in the master read dir.
4:0	**MASTER_STATE**	MASTER_STATE	**(For debugging only) Reads back the current master_state.** 0: Idle state 1: I2c master is preparing to send out the start bit, SCL=1, SDA=1. 2: I2C master is sending out the start bit, SCL=1, SDA=0. 3: I2C master/slave is preparing to transmit data bit, SCL=0, SDA=data bit. (Data bit can be changed when SCL=0.) 4: I2C master/slave is transmitting data bit, SCL=1, SDA=data bit. (Data bit is stable when SCL=1.) 5: I2C master/slave is preparing to transmit the ACK bit, SCL=0, SDA=ack. (The ACK bit can be changed when SCL=0.) 6: I2C master/slave is transmitting the ACK bit, SCL=1, SDA=0. (The ACK bit is stable when SCL=1.) 7: I2C master is preparing to send out stop bit or repeated-start bit, SCL=0, SDA=0/1. (0: Stop bit; 1: Repeated-start bit) 8: I2C master is sending out stop bit or repeated-start bit, SCL=1, SDA=1/0. (0: Repeated-start bit; 1: Stop bit) 9: I2C master is in delay start between two transfers, SCL=1, SDA=1. 10: I2C master is in FIFO wait state; For writing transaction, it means FIFO is empty and I2C master is waiting for DMA controller to write data into FIFo. For reading transaction, it means FIFO is full and I2C master is waiting for DMA controller to read data from FIFOo, SCL=0, SDA=don't care. 12: I2C master is preparing to send out data bit of master code. This state is used only in high-speed transaction, SCL=0, SDA=data bit of master code. (Data bit of master code can be changed when SCL=0.) 13: I2C master is sending out data bit of master code. This state is used only in high-speed transaction, SCL=1, SDA=data bit of master code. (Data bit of master code is stable when SCL=1.) 14: I2C master/slave is preparing to transmit the NACK bit, SCL=0, SDA=nack bit. (The NACK bit can be changed when SCL=0.) This state is used only in high-speed transaction. 15: I2C master/slave is transmitting the NACK bit, SCL=1, SDA=1. This state is used only in high-speed transaction.

© 2015 - 2017 MediaTek Inc.

This document contains information that is proprietary to MediaTek Inc. ("MediaTek") and/or its licensor(s).
Any unauthorized use, reproduction or disclosure of this document in whole or in part is strictly prohibited.

A0210068 DEBUGCTRL Debug Control Register 0000

Bit	15	14	13	12	11	10	9	8	7	6	5	4	3	2	1	0
Name															APB_DEBUG_RD	FIFO_APB_DEBUG
Type															WO	RW
Reset															0	0

Bit(s)	Mnemonic	Name	Description
1	**APB_DEBUG_RD**	APB_DEBUG_RD	**Only valid when fifo_apb_debug is set to 1** Writing to this register will generate a 1 pulsed FIFO APB RD signal for reading the FIFO data.
0	**FIFO_APB_DEBUG**	FIFO_APB_DEBUG	**Used for trace 32 debugging** When using trace 32, and the memory map is shown, turning this bit on will block the normal APB read access. The APB read access to the FIFO will then be enabled by writing to apb_debug_rd. 0: Disable 1: Enable

A021006C TRANSFER_LEN_AUX Transfer Length Register (Number of Bytes per Transfer) 0001

Bit	15	14	13	12	11	10	9	8	7	6	5	4	3	2	1	0
Name													TRANSFER_LEN_AUX			
Type													RW			
Reset													0	0	0	1

Bit(s)	Mnemonic	Name	Description
3:0	**TRANSFER_LEN_AUX**	TRANSFER_LEN_AUX	**Only valid when dir_change or transfer_len_change is set to 1. Indicates the number of data bytes to be transferred in 1 transfer unit (excluding slave address byte) for the transfers following the direction change or transfer_len_change** If dir_change =1, the first write transfer length will depend on transfer_len, while the second read transfer length will depend on transfer_len_aux. Dir change is always after the first transfer. Similarly, transfer length change is always after the first transfer. *Note: The value must be set to be bigger than 1; otherwise no transfer will take place.*

© 2015 - 2017 MediaTek Inc.

This document contains information that is proprietary to MediaTek Inc. ("MediaTek") and/or its licensor(s).
Any unauthorized use, reproduction or disclosure of this document in whole or in part is strictly prohibited.

10. SD Memory Card Controller

10.1. General Description

The controller fully supports the SD memory card bus protocol as defined in SD Memory Card Specification Part 1 Physical Layer Specification version 2.0 and eMMC 4.41 protocol.

Furthermore, the controller also partially supports the SDIO card specification version 2.0. However, the controller can only be configured as the host of the SD memory card. Hereafter, the controller is also abbreviated as the SD controller. The following are the main features of the controller.

- Interface with MCU by APB bus
- 16/32-bit access on APB bus
- 16/32-bit access for control registers
- 32-bit access for FIFO
- Built-in 32 bytes FIFO buffers for transmit and receive, FIFO is shared for transmit and receive
- Built-in CRC circuit
- CRC generation can be disabled
- DMA supported
- Interrupt capabilities
- Data rate up to 48Mbps in serial mode, 48x4 Mbps in parallel model, the module is targeted at 48MHz operating clock
- Serial clock rate on SD/MMC bus is programmable
- Card detection capabilities during sleep mode
- Controllability of power for memory card
- Does not support SPI mode for SD/MMC memory card
- Does not support multiple SD/MMC memory cards

10.1.1. Pin Assignment

The following lists pins required for the SD memory card. Table 10-1 shows how the pins are shared. Note that all I/O pads have embedded both pull-up and pull-down resistors because they are shared by the SD memory card. The pull-down resistors for these pins can be used for power saving. If optimal pull-up or pull-down resistors are required on the system board, all embedded pull-up and pull-down resistors can be disabled by programming the corresponding control registers. The VDDPD pin is used for power saving. Power for the SD memory card can be shut down by programming the corresponding control register. The WP (Write Protection) pin is used to detect the status of the Write Protection Switch on the SD memory card.

© 2015 - 2017 MediaTek Inc.

This document contains information that is proprietary to MediaTek Inc. (“MediaTek”) and/or its licensor(s).
Any unauthorized use, reproduction or disclosure of this document in whole or in part is strictly prohibited.

Table 10-1. Sharing of pins for SD memory card controller

No.	Name	Type	MMC	SD	Description
1	SD_CLK	O	CLK	CLK	Clock
2	SD_DAT3	I/O/PP	CD/DAT3	CD/DAT3	Data Line [Bit 3]
3	SD_DAT0	I/O/PP	DAT0	DAT0	Data Line [Bit 0]
4	SD_DAT1	I/O/PP	DAT1	DAT1	Data Line [Bit 1]
5	SD_DAT2	I/O/PP	DAT2	DAT2	Data Line [Bit 2]
6	SD_CMD	I/O/PP	CMD	CMD	Command or bus state
7	SD_PWRON	O	-	-	VDD ON/OFF
8	SD_WP	I	-	-	Write protection switch in SD
9	SD_INS	I	VSS2	VSS2	Card detection

10.1.2. Card Detection

For SD memory card, detection of card insertion/removal by hardware is supported, and a dedicated pin “INS” is used to perform card insertion and removal for SD. The pin “INS” will be connected to the pin “VSS2” of a SD connector (see Figure 10-1).

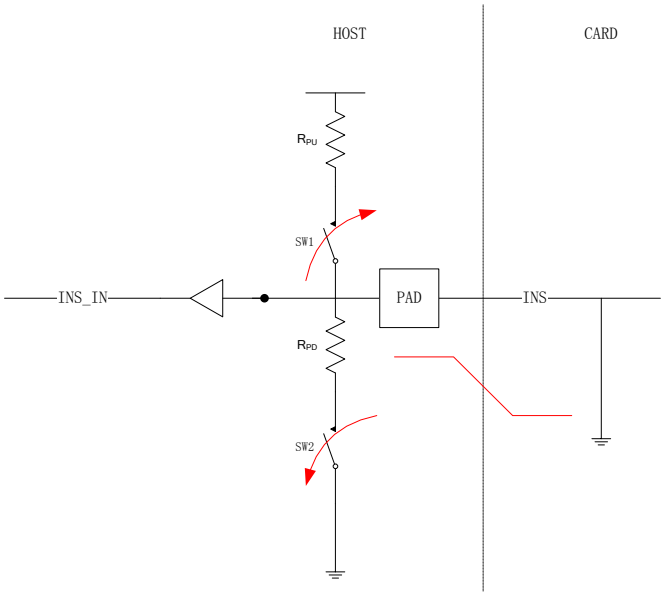

Figure 10-1. Card detection for SD memory card

© 2015 - 2017 MediaTek Inc.

This document contains information that is proprietary to MediaTek Inc. (“MediaTek”) and/or its licensor(s).
Any unauthorized use, reproduction or disclosure of this document in whole or in part is strictly prohibited.

10.1.3. IO Pad Setting

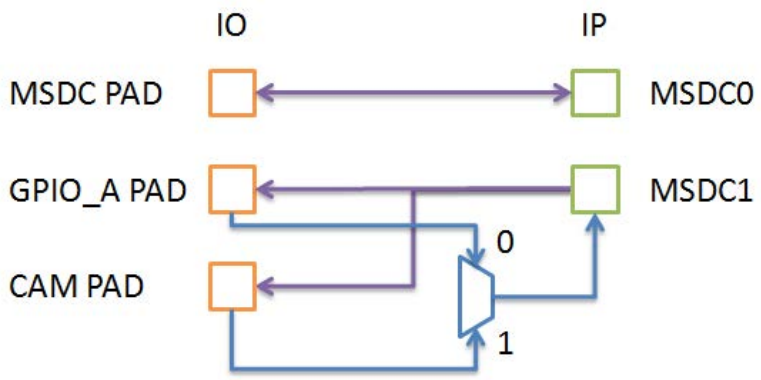

Figure 10-2. IO Pinmux setting for MSDC

There are one set of dedicated pads for MSDC0 and two sets of pads for MSDC1. To switch between those two sets, the GPIO and an extra input mux setting are needed. For GPIO settings, refer to GPIO specification. For input mux setting, refer to the table below.

Address	Register Name	Field Name	MSB	LSB	Description
A2010234	HW_MISC3	MSDC1_PAD_SEL	0	0	0: GPIO_A PAD for MSDC1 1: CAMERA PAD for MSDC1

10.2. Register Definition

There are two MSDCs in this SOC. The usage of the registers below is the same except that the base address should be changed to respective one.

MSDC number	Base address	Feature
MSDC0	0xA0020000	Supports DMA, 4-bit data line
MSDC1	0xA0030000	Supports DMA, 4-bit data line

Module name: MSDC0 Base address: (+a0020000h)

Address	Name	Width	Register Function
A0020000	MSDC_CFG	32	SD Memory Card Controller Configuration Register
A0020004	MSDC_STA	32	SD Memory Card Controller Status Register
A0020008	MSDC_INT	32	SD Memory Card Controller Interrupt Register
A0020010	MSDC_DAT	32	SD Memory Card Controller Data Register
A0020014	MSDC_IOCON	32	SD Memory Card Controller IO Control Register

© 2015 - 2017 MediaTek Inc.

This document contains information that is proprietary to MediaTek Inc. ("MediaTek") and/or its licensor(s).
Any unauthorized use, reproduction or disclosure of this document in whole or in part is strictly prohibited.

Address	Name	Width	Register Function
A0020018	MSDC_IOCON1	32	SD Memory Card Controller IO Control Register 1
A0020020	SDC_CFG	32	SD Memory Card Controller Configuration Register
A0020024	SDC_CMD	32	SD Memory Card Controller Command Register
A0020028	SDC_ARG	32	SD Memory Card Controller Argument Register
A002002C	SDC_STA	32	SD Memory Card Controller Status Register
A0020030	SDC_RESP0	32	SD Memory Card Controller Response Register 0
A0020034	SDC_RESP1	32	SD Memory Card Controller Response Register 1
A0020038	SDC_RESP2	32	SD Memory Card Controller Response Register 2
A002003C	SDC_RESP3	32	SD Memory Card Controller Response Register 3
A0020040	SDC_CMDSTA	32	SD Memory Card Controller Command Status Register
A0020044	SDC_DATSTA	32	SD Memory Card Controller Data Status Register
A0020048	SDC_CSTA	32	SD Memory Card Status Register
A002004C	SDC_IRQMASK0	32	SD Memory Card IRQ Mask Register 0
A0020050	SDC_IRQMASK1	32	SD Memory Card IRQ Mask Register 1
A0020054	SDIO_CFG	32	SDIO Configuration Register
A0020058	SDIO_STA	32	SDIO Status Register
A0020080	CLK_RED	32	CLK Latch Configuration Register
A0020098	DAT_CHECKSUM	32	MSDC Rx Data Check Sum Register

A0020000 MSDC_CFG **SD Memory Card Controller Configuration Register** **04000020**

Bit	31	30	29	28	27	26	25	24	23	22	21	20	19	18	17	16
Name					FIFOTHD				CLKSRC_PAT		VDDPD	RCDEN	DIRQEN	PINEN	DMAEN	INTEN
Type					RW				RW		RW	RW	RW	RW	RW	RW
Reset					0	1	0	0	0		0	0	0	0	0	0
Bit	15	14	13	12	11	10	9	8	7	6	5	4	3	2	1	0
Name	SCLKF								SCLKON	CRED	STDBY	CLKSRC		NOCRC	RST	MSDC
Type	RW								RW	RW	RW	RW		RW	W1C	RW
Reset	0	0	0	0	0	0	0	0	0	0	1	0	0	0	0	0

© 2015 - 2017 MediaTek Inc.

This document contains information that is proprietary to MediaTek Inc. ("MediaTek") and/or its licensor(s).
Any unauthorized use, reproduction or disclosure of this document in whole or in part is strictly prohibited.

Bit(s)	Mnemonic	Name	Description
27:24	**FIFOTHD**	FIFOTHD	**FIFO threshold. The register field determines when to issue a DMA request. For write transactions, DMA requests will be asserted if the number of free entries in FIFO are larger than or equal to the value in the register field. For read transactions, DMA requests will be asserted if the number of valid entries in FIFO are larger than or equal to the value in the register field. The register field must be set according to the setting of data transfer count in DMA burst mode. If single mode for DMA transfer is used, the register field should be set to 0b0001.** 0000: Invalid. 0001: Threshold value is 1. 0010: Threshold value is 2. 0011~01111: ... 1000: Threshold value is 8. others: Invalid
23	**CLKSRC_PAT**	CLKSRC_PAT	**CLKSRC patch, when {CLKSRC_PAT,CLKSRC} equal to** 0: CLKSQ_F26M_CK 1: LFOSC_F26M_CK 2: MPLL_DIV3P5_CK (89.1MHz) 3: MPLL_DIV4_CK (78MHz) 4: MPLL_DIV5_CK (62.4MHz) 5: HFOSC_DIV3P5_CK (89.1MHz) 6: HFOSC_DIV4_CK (78MHz) 7: HFOSC_DIV5_CK (62.4MHz)
21	**VDDPD**	VDDPD	**Controls the output pin VDDPD used for power saving. The output pin VDDPD will control power for memory card.** 0: The output pin VDDPD will output logic low. The power for memory card will be turned off. 1: The output pin VDDPD will output logic high. The power for memory card will be turned on.
20	**RCDEN**	RCDEN	**Controls the output pin RCDEN used for card identification process when the controller is for SD memory card. Its output will control the pull down resistor on the system board to connect or disconnect with the signal**

© 2015 - 2017 MediaTek Inc.

This document contains information that is proprietary to MediaTek Inc. (“MediaTek”) and/or its licensor(s).
Any unauthorized use, reproduction or disclosure of this document in whole or in part is strictly prohibited.

Bit(s)	Mnemonic	Name	Description
			CD/DAT3. 0: The output pin RCDEN will output logic low. 1: The output pin RCDEN will output logic high.
19	**DIRQEN**	DIRQEN	**Enables data request interrupt. The register bit is used to control if data request is used as an interrupt source.** 0: Data request is not used as an interrupt source. 1: Data request is used as an interrupt source.
18	**PINEN**	PINEN	**Enables pin interrupt. The register bit is used to control if the pin for card detection is used as an interrupt source.** 0: The pin for card detection is not used as an interrupt source. 1: The pin for card detection is used as an interrupt source.
17	**DMAEN**	DMAEN	**Enables DMA. Note that if DMA capability is disabled then application software must poll the status of the register MSDC_STA for checking any data transfer request. If DMA is desired, the register bit must be set before command register is written.** 0: DMA request induced by various conditions is disabled, no matter the controller is configured as the host of either SD memory card or memory stick. 1: DMA request induced by various conditions is enabled, no matter the controller is configured as the host of either SD memory card or memory stick.
16	**INTEN**	INTEN	**Enables interrupt. Note that if interrupt capability is disabled, application software must poll the status of the register MSDC_STA to check for any interrupt request.** 0: Interrupt induced by various conditions is disabled, no matter the controller is configured as the host of either SD memory card or memory stick. 1: Interrupt induced by various conditions is enabled, no matter the controller is configured as the host of either SD memory card or memory stick.
15:8	**SCLKF**	SCLKF	**Controls clock frequency of serial clock on SD bus. Denote clock frequency of SD bus serial clock as fslave and clock frequency of the SD controller as fhost which is 89.1MHz. Then the value of the register field is as the following.** **Note: The allowed maximum frequency of**

This document contains information that is proprietary to MediaTek Inc. (“MediaTek”) and/or its licensor(s).
Any unauthorized use, reproduction or disclosure of this document in whole or in part is strictly prohibited.

Bit(s)	Mnemonic	Name	Description
			fslave is 44.55MHz. While changing clock rate, it needs "1T clock period before changing + 1T clock period after change" for HW signal to re-synchronize. 00000000b: fslave =(1/2)*fhost 00000001b: fslave = (1/(4*1))*fhost 00000010b: fslave = (1/(4*2))*fhost 00000011b: fslave = (1/(4*3))*fhost 00000100b~111111110b: ... 11111111b: fslave = (1/(4*255))*fhost
7	**SCLKON**	SCLKON	**Serial clock always on. For debugging.** 0: Serial clock not always on. 1: Serial clock always on.
6	**CRED**	CRED	**Rising edge data. The register bit is used to determine that serial data input is latched at the falling edge or the rising edge of serial clock. The default setting is at the rising edge. If serial data have worse timing, set the register bit to'1'. When the memory card has worse timing on return read data, set the register bit to '1'.** 0: Serial data input is latched at the rising edge of serial clock. 1: Serial data input is latched at the falling edge of serial clock.
5	**STDBY**	STDBY	**Standby mode. If the module is powered down, operating clock to the module will be stopped. At the same time, clock to card detection circuitry will also be stopped. If detection of memory card insertion and removal is desired, write '1' to the register bit. If interrupt for detection of memory card insertion and removal is enabled, interrupt will take place whenever memory is inserted or removed.** 0: Standby mode is disabled. 1: Standby mode is enabled.
4:3	**CLKSRC**	CLKSRC	**Specifies which clock is used as source clock of memory card. Use MPLL (312MHz) or HFOSC (312MHz) as source clock of memory card when clock hopping is not enabled. If clock hopping is enabled, MPLL clock's hopping rate will be 0~-8% and HFOSC 312MHz (0~-8%).**

© 2015 - 2017 MediaTek Inc.

This document contains information that is proprietary to MediaTek Inc. (“MediaTek”) and/or its licensor(s).
Any unauthorized use, reproduction or disclosure of this document in whole or in part is strictly prohibited.

Bit(s)	Mnemonic	Name	Description
			00: CLKSQ_F26M_CK; MPLL_DIV5_CK (62.4MHz) 01: LFOSC_F26M_CK; HFOSC_DIV3P5_CK (89.1MHz) 10: MPLL_DIV3P5_CK (89.1MHz); HFOSC_DIV4_CK (78MHz) 11: MPLL_DIV4_CK (78MHz); HFOSC_DIV5_CK (62.4MHz)
2	**NOCRC**	NOCRC	**Disables CRC. 1 indicates that data transfer without CRC is desired. For write data block, data will be transmitted without CRC. For read data block, CRC will not be checked. It is for tests.** 0: Data transfer with CRC is desired. 1: Data transfer without CRC is desired.
1	**RST**	RST	**Software reset. Writing 1 to the register bit will cause internal synchronous reset of SD controller but will not reset register settings. RST should only be set when RST is equal to 0.** 0: Read 0 stands for the reset process is finished. 1: Write 1 to reset SD controller.
0	**MSDC**	MSDC	**Configures the controller as SD memory card mode. CLK/CMD/DAT line will be pulled low when SD memory card mode is disabled.** 0: Disable SD memory card 1: Enable SD memory card

A0020004 MSDC_STA SD Memory Card Controller Status Register 00000002

Bit	31	30	29	28	27	26	25	24	23	22	21	20	19	18	17	16
Name																
Type																
Reset																
Bit	15	14	13	12	11	10	9	8	7	6	5	4	3	2	1	0
Name	**BUSY**	**FIFOCLR**							**FIFOCNT**				**INT**	**DRQ**	**BE**	**BF**
Type	RO	W1C							RO				RO	RO	RO	RO
Reset	0	0							0	0	0	0	0	0	1	0

© 2015 - 2017 MediaTek Inc.

This document contains information that is proprietary to MediaTek Inc. ("MediaTek") and/or its licensor(s).
Any unauthorized use, reproduction or disclosure of this document in whole or in part is strictly prohibited.

Bit(s)	Mnemonic	Name	Description
15	**BUSY**	BUSY	**Status of the controller. If the controller is in busy state, the register bit will be '1'. Otherwise '0'.** 0: The controller is in busy state. 1: The controller is in idle state.
14	**FIFOCLR**	FIFOCLR	**Clears FIFO. Writing '1' to the register bit will cause the content of FIFO clear and reset the status of FIFO controller.** 0: Read 0 stands for the FIFO clear process is finished. 1: Write 1 to clear the content of FIFO clear and reset the status of FIFO controller.
7:4	**FIFOCNT**	FIFOCNT	**FIFO count. The register field shows how many valid entries are in FIFO.** 0000: There is 0 valid entry in FIFO. 0001: There is 1 valid entry in FIFO. 0010: There are 2 valid entries in FIFO. 0011~0111: ... 1000: There are 8 valid entries in FIFO.
3	**INT**	INT	**Indicates if any interrupt exists. While any interrupt exists, the register bit still will be active even if the register bit INTEN in the register MSDC_CFG is disabled. SD controller can interrupt MCU by issuing interrupt request to interrupt controller, or software/application polls the register endlessly to check if any interrupt request exists in SD controller. When the register bit INTEN in the register MSDC_CFG is disabled, the second method will be used. For read commands, it is possible that timeout error takes place. Software can read the status register to check if timeout error takes place without OS time tick support or data request is asserted.** **Note: The register bit will be cleared when reading the register MSDC_INT.** 0: No interrupt request exists. 1: Interrupt request exists.
2	**DRQ**	DRQ	**Indicates if any data transfer is required. When any data transfer is required, the register bit still will be active even if the register bit DIRQEN in the register MSDC_CFG is disabled. Data transfer can be achieved by DMA channel alleviating MCU loading, or by polling the register bit to check if any data transfer is**

This document contains information that is proprietary to MediaTek Inc. (“MediaTek”) and/or its licensor(s).
Any unauthorized use, reproduction or disclosure of this document in whole or in part is strictly prohibited.

Bit(s)	Mnemonic	Name	Description
			requested. When the register bit DIRQEN in the register MSDC_CFG is disabled, the second method will be used. 0: No DMA request exists. 1: DMA request exists.
1	**BE**	BE	**Indicates if FIFO in SD controller is empty** 0: FIFO in SD controller is not empty. 1: FIFO in SD controller is empty.
0	**BF**	BF	**Indicates if FIFO in SD controller is full** 0: FIFO in SD controller is not full. 1: FIFO in SD controller is full.

A0020008 MSDC_INT SD Memory Card Controller Interrupt Register 00000000

Bit	31	30	29	28	27	26	25	24	23	22	21	20	19	18	17	16
Name																
Type																
Reset																
Bit	15	14	13	12	11	10	9	8	7	6	5	4	3	2	1	0
Name									SDIOIRQ	SDR1BIRQ		SDMCIRQ	SDDATIRQ	SDCMDIRQ	PINIRQ	DIRQ
Type									RC	RC		RC	RC	RC	RC	RC
Reset									0	0		0	0	0	0	0

Bit(s)	Mnemonic	Name	Description
7	**SDIOIRQ**	SDIOIRQ	**SDIO interrupt. The register bit indicates if any interrupt for SDIO exists. Whenever interrupt for SDIO exists, the register bit will be set to '1' if interrupt is enabled. It will be reset when the register is read.** 0: No SDIO interrupt 1: Interrupt for SDIO exists.
6	**SDR1BIRQ**	SDR1BIRQ	**SD R1b response interrupt. The register bit will be active when a SD command with R1b response finished and the DAT0 line has transited from busy to idle state. Single block write commands with R1b response will cause interrupt when the command is completed no matter successfully or with CRC error.**

© 2015 - 2017 MediaTek Inc.
This document contains information that is proprietary to MediaTek Inc. ("MediaTek") and/or its licensor(s).
Any unauthorized use, reproduction or disclosure of this document in whole or in part is strictly prohibited.

Bit(s)	Mnemonic	Name	Description
			However, multi-block write commands with R1b response will not cause the interrupt because multi-block write commands are always stopped by STOP_TRANS commands. STOP_TRANS commands (with R1b response) behind multi-block write commands will cause the interrupt. Single block read command with R1b response will cause the interrupt when the command is completed but multi-block read commands do not. **Note: STOP_TRANS commands (with R1b response) behind multi-block read commands will cause interrupt.** 0: No interrupt for SD R1b response. 1: Interrupt for SD R1b response exists.
4	**SDMCIRQ**	SDMCIRQ	**SD memory card interrupt. The register bit indicates if any interrupt for SD memory card exists. Whenever interrupt for SD memory card exists, i.e. any bit in the register SDC_CSTA is active, the register bit will be set to '1' if interrupt is enabled. It will be reset when the register is read.** **Note: This bit will not trigger MSDC hardware interrupt.** 0: No SD memory card interrupt 1: SD memory card interrupt exists.
3	**SDDATIRQ**	SDDATIRQ	**SD bus DAT interrupt. The register bit indicates if any interrupt for SD DAT line exists. Whenever interrupt for SD DAT line exists, i.e. any bit in the register SDC_ DATSTA is active, the register bit will be set to '1' if interrupt is enabled. It will be reset when the register is read.** 0: No SD DAT line interrupt 1: SD DAT line interrupt exists.
2	**SDCMDIRQ**	SDCMDIRQ	**SD bus CMD interrupt. The register bit indicates if any interrupt for SD CMD line exists. Whenever interrupt for SD CMD line exists, i.e. any bit in the register SDC_CMDSTA is active, the register bit will be set to '1' if interrupt is enabled. It will be reset when the register is read.** 0: No SD CMD line interrupt 1: SD CMD line interrupt exists.
1	**PINIRQ**	PINIRQ	**Pin change interrupt. The register bit indicates if any interrupt for memory card insertion/removal exists. Whenever memory**

This document contains information that is proprietary to MediaTek Inc. (“MediaTek”) and/or its licensor(s).
Any unauthorized use, reproduction or disclosure of this document in whole or in part is strictly prohibited.

Bit(s)	Mnemonic	Name	Description
			card is inserted or removed and card detection interrupt is enabled, i.e. the register bit PINEN in the register MSDC_CFG is set to '1', the register bit will be set to '1'. It will be reset when the register is read. 0: Otherwise 1: Card is inserted or removed.
0	**DIRQ**	DIRQ	**Data request interrupt. The register bit indicates if any interrupt for data request exists. Whenever data request exists and data request as an interrupt source is enabled, i.e. the register bit DIRQEN in the register MSDC_CFG is set to '1', the register bit will be active. It will be reset when reading it. For software, data requests can be recognized by polling the register bit DRQ or by data request interrupt. Data request interrupts will be generated every FIFOTHD data transfer.** 0: No data request interrupt 1: Data request interrupt occurs.

A0020010 MSDC_DAT SD Memory Card Controller Data Register 00000000

Bit	31	30	29	28	27	26	25	24	23	22	21	20	19	18	17	16
Name	DATA															
Type	RW															
Reset	0	0	0	0	0	0	0	0	0	0	0	0	0	0	0	0
Bit	15	14	13	12	11	10	9	8	7	6	5	4	3	2	1	0
Name	DATA															
Type	RW															
Reset	0	0	0	0	0	0	0	0	0	0	0	0	0	0	0	0

Bit(s)	Mnemonic	Name	Description
31:0	**DATA**	DATA	**Reads/writes data from/to FIFO inside SD controller. Data access is in unit of 32 bits.**

© 2015 - 2017 MediaTek Inc.
This document contains information that is proprietary to MediaTek Inc. ("MediaTek") and/or its licensor(s).
Any unauthorized use, reproduction or disclosure of this document in whole or in part is strictly prohibited.

A0020014 MSDC_IOCON **SD Memory Card Controller IO Control Register** **010000C3**

Bit	31	30	29	28	27	26	25	24	23	22	21	20	19	18	17	16
Name							SAMPLE DLY		FIXDLY		SAMPON	CRCDIS	CMDSEL	INTLH		DSW
Type							RW		RW		RW	RW	RW	RW		RW
Reset							0	1	0	0	0	0	0	0	0	0
Bit	15	14	13	12	11	10	9	8	7	6	5	4	3	2	1	0
Name	CMDRE					HIGH_SPEED	DMABURST		SRCFG1	SRCFG0	ODCCFG1			ODCCFG0		
Type	RW					RW	RW		RW	RW	RW			RW		
Reset	0					0	0	0	1	1	0	0	0	0	1	1

Bit(s)	Mnemonic	Name	Description
25:24	**SAMPLEDLY**	SAMPLEDLY	**The register is used for SW to select the turn around delay cycle between write data end bit and CRC status for SD card.** 00: 0-T delay 01: 1-T delay 10: 2-T delay 11: 3-T delay
23:22	**FIXDLY**	FIXDLY	**The register is used for SW to select the delay cycle after clock fix high for the host controller to SD card.** 00: 0-T delay 01: 1-T delay 10: 2-T delay 11: 3-T delay
21	**SAMPON**	SAMPON	**Data sample enable always on. The bit's suggested setting is 1 when feedback clock is used and 0 when multiple phase clock is used.** 0: Data sample enable not always on 1: Data sample enable always on.
20	**CRCDIS**	CRCDIS	**Switches off data CRC check for SD read data** 0: CRC check is on. 1: CRC check is off.
19	**CMDSEL**	CMDSEL	**Determines whether the host should delay 1-T**

This document contains information that is proprietary to MediaTek Inc. ("MediaTek") and/or its licensor(s).
Any unauthorized use, reproduction or disclosure of this document in whole or in part is strictly prohibited.

Bit(s)	Mnemonic	Name	Description
			to latch response from card 0: Host latches response without 1-T delay. 1: Host latches response with 1-T delay.
18:17	**INTLH**	INTLH	**Selects latch timing for SDIO multi-block read interrupt** 00: Host latches INT at the second backend clock after the end bit of current data block from card is received. (default) 01: Host latches INT at the first backend clock after the end bit of current data block from card is received. 10: Host latches INT at the second backend clock after the end bit of current data block from card is received. 11: Host latches INT at the third backend clock after the end bit of current data block from card is received.
16	**DSW**	DSW	**Determines whether the host should latch data with 1-T delay or not. For SD card, this bit is suggested to be 0. For MSPRO cards, it is suggested to be 1.** 0: Host latches the data with 1-T delay. 1: Host latches the data without 1-T delay.
15	**CMDRE**	CMDRE	**Determines whether the host should latch response token (sent from card on CMD line) at rising edge or falling edge of serial clock. (T.B.D this bit is un-useful)** 0: Host latches response at rising edge of serial clock 1: Host latches response at falling edge of serial clock
10	**HIGH_SPEED**	HIGH_SPEED	**For high-speed mode when internal sample clock is used. High-speed mode means that the SD/MMC serial bus clock rate is bigger than 25MHz. The default speed mode means that the SD/MMC serial bus clock rate is bigger than 25MHz.** 0: Default speed 1: High speed
9:8	**DMABURST**	DMABURST	**The register is used for SW to select burst type when data transfer by DMA.** **Note: Only single mode can support non-4N bytes data transfer in read operation.**

© 2015 - 2017 MediaTek Inc.
This document contains information that is proprietary to MediaTek Inc. (“MediaTek”) and/or its licensor(s).
Any unauthorized use, reproduction or disclosure of this document in whole or in part is strictly prohibited.

Bit(s)	Mnemonic	Name	Description
			00: Single mode 01: 4-beat incrementing burst 10: 8-beat incrementing burst 11: Reserved.
7	**SRCFG1**	SRCFG1	**Output driving capability the pins DAT0, DAT1, DAT2 and DAT3** 0: Fast slew rate 1: Slow slew rate
6	**SRCFG0**	SRCFG0	**Output driving capability the pins CMD/BS and SCLK** 0: Fast slew rate 1: Slow slew rate
5:3	**ODCCFG1**	ODCCFG1	**Output driving capability the pins DAT0, DAT1, DAT2 and DAT3** 000: 4mA 001: 8mA 010: 12mA 011: 16mA
2:0	**ODCCFG0**	ODCCFG0	**Output driving capability the pins CMD/BS and SCLK** 000: 4mA 001: 8mA 010: 12mA 011: 16mA

A0020018 MSDC_IOCON1 SD Memory Card Controller IO Control Register 1 00022022

Bit	31	30	29	28	27	26	25	24	23	22	21	20	19	18	17	16
Name														**PRCFG_RST_WP**	**PRVAL_RST_WP**	
Type														RW	RW	
Reset														0	1	0

© 2015 - 2017 MediaTek Inc.

This document contains information that is proprietary to MediaTek Inc. ("MediaTek") and/or its licensor(s).
Any unauthorized use, reproduction or disclosure of this document in whole or in part is strictly prohibited.

Bit	15	14	13	12	11	10	9	8	7	6	5	4	3	2	1	0
Name		**PRCFG_CK**	**PRVAL_CK**			**PRCFG_CM**	**PRVAL_CM**			**PRCFG_DA**	**PRVAL_DA**			**PRCFG_INS**	**PRVAL_INS**	
Type		RW	RW			RW	RW			RW	RW			RW	RW	
Reset		0	1	0		0	0	0		0	1	0		0	1	0

Bit(s)	Mnemonic	Name	Description
18	**PRCFG_RST/WP**	PRCFG_RST_WP	**Pull up/down register configuration for pin RST/WP. The default value is 0.** 0: Pull up resistor in the I/O pad of the pin WP is enabled. 1: Pull down resistor in the I/O pad of the pin WP is enabled.
17:16	**PRVAL_RST/WP**	PRVAL_RST_WP	**Pull up/down register value for pin RST/WP. The default value is 10.** 00: Pull up resistor and pull down resistor in the I/O pad of the pin WP are all disabled. 01: Pull up/down resistor in the I/O pad of the pin WP value is 47k. 10: Pull up/down resistor in the I/O pad of the pin WP value is 47k. 11: Pull up/down resistor in the I/O pad of the pin WP value is 23.5k.
14	**PRCFG_CK**	PRCFG_CK	**Configures pull up/down register for pin CK. The default value is 0.** 0: Pull up resistor in the I/O pad of the pin CK is enabled. 1: Pull down resistor in the I/O pad of the pin CK is enabled.
13:12	**PRVAL_CK**	PRVAL_CK	**Pull up/down register value for pin CLK. The default value is 10.** 00: Pull up resistor and pull down resistor in the I/O pad of the pin CLK are all disabled. 01: Pull up/down resistor in the I/O pad of the pin CLK value is 47k. 10: Pull up/down resistor in the I/O pad of the pin CLK value is 47k. 11: Pull up/down resistor in the I/O pad of the pin CLK value is 23.5k.
10	**PRCFG_CM**	PRCFG_CM	**Configures pull up/down register for the pin CM. The default value is 0.** 0: Pull up resistor in the I/O pad of the pin CM is

© 2015 - 2017 MediaTek Inc.

This document contains information that is proprietary to MediaTek Inc. (“MediaTek”) and/or its licensor(s).
Any unauthorized use, reproduction or disclosure of this document in whole or in part is strictly prohibited.

Bit(s)	Mnemonic	Name	Description
			enabled. 1: Pull down resistor in the I/O pad of the pin CM is enabled.
9:8	**PRVAL_CM**	PRVAL_CM	**Pull up/down register value for pin CMD/BS. The default value is 00.** 00: Pull up resistor and pull down resistor in the I/O pad of the pin CMD/BS are all disabled. 01: Pull up/down resistor in the I/O pad of the pin CMD/BS value is 47k. 10: Pull up/down resistor in the I/O pad of the pin CMD/BS value is 47k. 11: Pull up/down resistor in the I/O pad of the pin CMD/BS value is 23.5k.
6	**PRCFG_DA**	PRCFG_DA	**Configures pull up/down register for pin DAT0, DAT1, DAT2, DAT3. The default value is 0.** 0: Pull up resistor in the I/O pad of the pin DAT is enabled. 1: Pull down resistor in the I/O pad of the pin DAT is enabled.
5:4	**PRVAL_DA**	PRVAL_DA	**Pull up/down register value for pin DAT0, DAT1, DAT2, DAT3. The default value is 10.** 00: Pull up resistor and pull down resistor in the I/O pad of the pin DAT are all disabled. 01: Pull up/down resistor in the I/O pad of the pin DAT value is 47k. 10: Pull up/down resistor in the I/O pad of the pin DAT value is 47k. 11: Pull up/down resistor in the I/O pad of the pin DAT value is 23.5k.
2	**PRCFG_INS**	PRCFG_INS	**Configures pull up/down register for pin INS. The default value is 0** 0: Pull up resistor in the I/O pad of the pin WP is enabled. 1: Pull down resistor in the I/O pad of the pin WP is enabled.
1:0	**PRVAL_INS**	PRVAL_INS	**Pull up/down register value for pin INS. The default value is 10.** 00: Pull up resistor and pull down resistor in the I/O pad of the pin INS are all disabled.

© 2015 - 2017 MediaTek Inc.

This document contains information that is proprietary to MediaTek Inc. ("MediaTek") and/or its licensor(s).
Any unauthorized use, reproduction or disclosure of this document in whole or in part is strictly prohibited.

Bit(s)	Mnemonic	Name	Description
			01: Pull up/down resistor in the I/O pad of the pin INS value is 47k. 10: Pull up/down resistor in the I/O pad of the pin INS value is 47k. 11: Pull up/down resistor in the I/O pad of the pin INS value is 23.5k.

A0020020 SDC_CFG **SD Memory Card Controller Configuration Register** **00008000**

Bit	31	30	29	28	27	26	25	24	23	22	21	20	19	18	17	16
Name	DTOC								WDOD				SDIO		MDLEN	SIEN
Type	RW								RW				RW		RW	RW
Reset	0	0	0	0	0	0	0	0	0	0	0	0	0		0	0
Bit	15	14	13	12	11	10	9	8	7	6	5	4	3	2	1	0
Name	BSYDLY				BLKLEN											
Type	RW				RW											
Reset	1	0	0	0	0	0	0	0	0	0	0	0	0	0	0	0

Bit(s)	Mnemonic	Name	Description
31:24	**DTOC**	DTOC	**Data timeout counter. The period from finish of the initial host read command or the last read data block in a multiple block read operation to the start bit of the next read data block requires at least two serial clock cycles. The counter is used to extend the period (Read Data Access Time) in unit of 65,536 serial clocks. See the register field description of the register bit RDINT for reference.** 00000000: Extend 65,536 more serial clock cycle. 00000001: Extend 65,536x2 more serial clock cycles. 00000010: Extend 65,536x3 more serial clock cycles. 00000011~11111110: ... 11111111: Extend 65,536x 256 more serial clock cycles.
23:20	**WDOD**	WDOD	**Write data output delay. The period from finish of the response for the initial host write command or the last write data block in a multiple block write operation to the start bit of the next write data block requires at least two serial clock cycles. The register field is used to extend the period (Write Data Output Delay) in unit of one serial clock.**

© 2015 - 2017 MediaTek Inc.

This document contains information that is proprietary to MediaTek Inc. ("MediaTek") and/or its licensor(s).
Any unauthorized use, reproduction or disclosure of this document in whole or in part is strictly prohibited.

Bit(s)	Mnemonic	Name	Description
			0000: No extension 0001: Extend one more serial clock cycle. 0010: Extend two more serial clock cycles. 0011~1110: ... 1111: Extend fifteen more serial clock cycles.
19	**SDIO**	SDIO	**Enables SDIO** 0: SDIO mode is disabled. 1: SDIO mode is enabled.
17	**MDLEN**	MDLEN	**Enables multiple data line. The register can be enabled only when SD memory card is applied and detected by software application. It is the responsibility of the application to program the bit correctly when a MultiMediaCard is applied. If a MultiMediaCard is applied and 4-bit data line is enabled, the 4 bits will be outputted every serial clock. Therefore, data integrity will fail.** 0: 4-bit data line is disabled. 1: 4-bit data line is enabled.
16	**SIEN**	SIEN	**Enables serial interface. It should be enabled as soon as possible before any command.** 0: Serial interface for SD is disabled. 1: Serial interface for SD is enabled.
15:12	**BSYDLY**	BSYDLY	**The register field is only valid for the commands with R1b response. If the command has a response of R1b type, SD controller must monitor the data line 0 for card busy status from the bit time that is two serial clock cycles after the command end bit to check if operations in SD memory card have finished. The register field is used to expand the time between the command end bit and end of detection period to detect card busy status. If time is up and there is no card busy status on data line 0, the controller will abandon the detection.** 0000: No extension 0001: Extend one more serial clock cycle. 0010: Extend two more serial clock cycles. 0011~1110: ...

© 2015 - 2017 MediaTek Inc.

This document contains information that is proprietary to MediaTek Inc. (“MediaTek”) and/or its licensor(s).
Any unauthorized use, reproduction or disclosure of this document in whole or in part is strictly prohibited.

Bit(s)	Mnemonic	Name	Description
			1111: Extend fifteen more serial clock cycles.
11:0	**BLKLEN**	BLKLEN	**It refers to Block Length. The register field defines the length of one block in unit of byte in a data transaction. The maximum value of block length is 2048 bytes.** 000000000000: Reserved. 000000000001: Block length is 1 byte. 000000000010: Block length is 2 bytes. 000000000011~011111111110: ... 011111111111: Block length is 2047 bytes. 100000000000: Block length is 2048 bytes.

A0020024 SDC_CMD SD Memory Card Controller Command Register 00000000

Bit	31	30	29	28	27	26	25	24	23	22	21	20	19	18	17	16
Name																CMDFAIL
Type																RW
Reset																0
Bit	15	14	13	12	11	10	9	8	7	6	5	4	3	2	1	0
Name	INTC	STOP	RW	DTYPE		IDRT	RSPTYP			BREAK	CMD					
Type	RW	RW	RW	RW		RW	RW			RW	RW					
Reset	0	0	0	0	0	0	0	0	0	0	0	0	0	0	0	0

Bit(s)	Mnemonic	Name	Description
16	**CMDFAIL**	CMDFAIL	**If 4-bit SDIO mode is enabled, when CMD/DAT error occurs, set up this bit to select whether to "wait stop command" or "wait data state machine idle".** 0: Wait stop command 1: Wait data state machine idle
15	**INTC**	INTC	**Indicates if the command is GO_IRQ_STATE. If the command is GO_IRQ_STATE, the period between command token and response token will not be limited.** 0: The command is not GO_IRQ_STATE.

© 2015 - 2017 MediaTek Inc.
This document contains information that is proprietary to MediaTek Inc. ("MediaTek") and/or its licensor(s).
Any unauthorized use, reproduction or disclosure of this document in whole or in part is strictly prohibited.

Bit(s)	Mnemonic	Name	Description
			1: The command is GO_IRQ_STATE.
14	**STOP**	STOP	**Indicates if the command is a stop transmission command.** 0: The command is not a stop transmission command. 1: The command is a stop transmission command.
13	**RW**	RW	**Defines the command is a read command or write command. The register bit is valid only when the command will cause a transaction with data token.** 0: The command is a read command. 1: The command is a write command.
12:11	**DTYPE**	DTYPE	**Defines data token type for the command** 00: No data token for the command 01: Single block transaction 10: Multiple block transaction. That is, the command is a multiple block read or write command. 11: Stream operation. It should only be used when a MultiMediaCard is applied.
10	**IDRT**	IDRT	**Identification response time. The register bit indicates if the command has a response with NID (i.e. 5 serial clock cycles as defined in SD Memory Card Specification Part 1 Physical Layer Specification version 1.0) response time. The register bit is valid only when the command has a response token. Thus the register bit must be set to '1' for CMD2 (ALL_SEND_CID) and ACMD41 (SD_APP_OP_CMD).** 0: Otherwise. 1: The command has a response with NID response time.
9:7	**RSPTYP**	RSPTYP	**Defines response type for the command. For commands with R1 and R1b response, the register SDC_CSTA (not SDC_STA) will be updated after response token is received. This register SDC_CSTA contains the status of the SD and will be used as response interrupt sources.** **Note: If CMD7 is used with all 0's RCA, RSPTYP must be "000". Command "GO_TO_IDLE" also has RSPTYP='000'.**

© 2015 - 2017 MediaTek Inc.
This document contains information that is proprietary to MediaTek Inc. (“MediaTek”) and/or its licensor(s).
Any unauthorized use, reproduction or disclosure of this document in whole or in part is strictly prohibited.

Bit(s)	Mnemonic	Name	Description
			000: There is no response for the command. For instance, broadcast command without response and GO_INACTIVE_STATE command. 001: The command has R1 response. R1 response token is 48-bit. 010: The command has R2 response. R2 response token is 136-bit. 011: The command has R3 response. Even though R3 is 48-bit response, it does not contain CRC checksum. 100: The command has R4 response. R4 response token is 48-bit. (only for MMC) 101: The command has R5 response. R5 response token is 48-bit. (only for MMC) 110: The command has R6 response. R6 response token is 48-bit. 111: The command has R1b response. If the command has a response of R1b type, SD controller must monitor the data line 0 for card busy status from the bit time that is two or four serial clock cycles after the command end bit to check if operations in SD memory card have finished. There are two cases for detection of card busy status. The first case is that the host stops the data transmission during an active write data transfer. The card will assert busy signal after the stop transmission command end bit followed by four serial clock cycles. The second case is that the card is in idle state or under a scenario of receiving a stop transmission command between data blocks when multiple block write command is in progress. The register bit is valid only when the command has a response token.
6	**BREAK**	BREAK	**Aborts pending MMC GO_IRQ_MODE command. It is only valid for a pending GO_IRQ_MODE command waiting for MMC interrupt response.** 0: Other fields are valid. 1: Break a pending MMC GO_IRQ_MODE command in the controller. Other fields are invalid.
5:0	**CMD**	CMD	**SD memory card command. Total 6 bits.**

© 2015 - 2017 MediaTek Inc.

This document contains information that is proprietary to MediaTek Inc. (“MediaTek”) and/or its licensor(s).
Any unauthorized use, reproduction or disclosure of this document in whole or in part is strictly prohibited.

A0020028 SDC_ARG **SD Memory Card Controller Argument Register** **00000000**

Bit	31	30	29	28	27	26	25	24	23	22	21	20	19	18	17	16
Name	ARG															
Type	RW															
Reset	0	0	0	0	0	0	0	0	0	0	0	0	0	0	0	0
Bit	15	14	13	12	11	10	9	8	7	6	5	4	3	2	1	0
Name	ARG															
Type	RW															
Reset	0	0	0	0	0	0	0	0	0	0	0	0	0	0	0	0

Bit(s)	Mnemonic	Name	Description
31:0	**ARG**	ARG	**Contains argument of SD memory card command**

A002002C SDC_STA **SD Memory Card Controller Status Register** **00000000**

Bit	31	30	29	28	27	26	25	24	23	22	21	20	19	18	17	16
Name																
Type																
Reset																
Bit	15	14	13	12	11	10	9	8	7	6	5	4	3	2	1	0
Name	WP											FEDATBUSY	FECMDBUSY	BEDATBUSY	BECMDBUSY	BESDCBUSY
Type	RO											RO	RO	RO	RO	RO
Reset	0											0	0	0	0	0

Bit(s)	Mnemonic	Name	Description
15	**WP**	WP	**Detects the status of Write Protection switch on SD memory card. The register bit shows the status of Write Protection switch on SD memory card. There is no default reset value. The pin WP (Write Protection) is also only useful while the controller is configured for SD memory card.** 1: Write Protection switch on. It means that memory card is desired to be write-protected. 0: Write Protection switch off. It means that memory card is writable.

© 2015 - 2017 MediaTek Inc.
This document contains information that is proprietary to MediaTek Inc. ("MediaTek") and/or its licensor(s).
Any unauthorized use, reproduction or disclosure of this document in whole or in part is strictly prohibited.

Bit(s)	Mnemonic	Name	Description
4	**FEDATBUSY**	FEDATBUSY	**Indicates if any transmission is going on DAT line on SD bus. This bit indicates directly the CMD line at card clock domain. For those commands without data but still involving DAT line, the register bit is useless. For example, if an Erase command is issued, checking if the register bit is '0' before issuing the next command with data will not guarantee that the controller is idle. In this situation, use the register bit BESDCBUSY.** 0: No transmission is going on DAT line on SD bus. 1: There exists transmission going on DAT line on SD bus.
3	**FECMDBUSY**	FECMDBUSY	**Indicates if any transmission is going on CMD line on SD bus. This bit indicates directly the CMD line at card clock domain.** 0: No transmission is going on CMD line on SD bus. 1: There exists transmission going on CMD line on SD bus.
2	**BEDATBUSY**	BEDATBUSY	**Indicates if any transmission is going on DAT line on SD bus.** 0: Backend SDC controller gets the info that no transmission is going on DAT line on SD bus. 1: Backend SDC controller gets the info that there exists transmission going on DAT line on SD bus.
1	**BECMDBUSY**	BECMDBUSY	**Indicates if any transmission is going on CMD line on SD bus. This bit shows backend controller's CMD busy state. The busy state is sync from card clock domain to bus clock domain.** 0: Backend SDC controller gets the info that no transmission is going on CMD line on SD bus. 1: Backend SDC controller gets the info that there exists transmission going on CMD line on SD bus.
0	**BESDCBUSY**	BESDCBUSY	**Indicates if SD controller is busy, i.e. any transmission is going on CMD or DAT line on SD bus. This bit shows backend controller's SDC busy state. The busy state is sync from card clock domain to bus clock domain.** 0: Backend SD controller is idle. 1: Backend SD controller is busy.

© 2015 - 2017 MediaTek Inc.

This document contains information that is proprietary to MediaTek Inc. (“MediaTek”) and/or its licensor(s).
Any unauthorized use, reproduction or disclosure of this document in whole or in part is strictly prohibited.

A0020030 SDC_RESP0 **SD Memory Card Controller Response Register 0** **00000000**

Bit	31	30	29	28	27	26	25	24	23	22	21	20	19	18	17	16
Name	RESP_31_0															
Type	RO															
Reset	0	0	0	0	0	0	0	0	0	0	0	0	0	0	0	0
Bit	15	14	13	12	11	10	9	8	7	6	5	4	3	2	1	0
Name	RESP_31_0															
Type	RO															
Reset	0	0	0	0	0	0	0	0	0	0	0	0	0	0	0	0

Bit(s)	Mnemonic	Name	Description
31:0	**RESP[31:0]**	RESP_31_0	

A0020034 SDC_RESP1 **SD Memory Card Controller Response Register 1** **00000000**

Bit	31	30	29	28	27	26	25	24	23	22	21	20	19	18	17	16
Name	RESP_63_32															
Type	RO															
Reset	0	0	0	0	0	0	0	0	0	0	0	0	0	0	0	0
Bit	15	14	13	12	11	10	9	8	7	6	5	4	3	2	1	0
Name	RESP_63_32															
Type	RO															
Reset	0	0	0	0	0	0	0	0	0	0	0	0	0	0	0	0

Bit(s)	Mnemonic	Name	Description
31:0	**RESP[63:32]**	RESP_63_32	

A0020038 SDC_RESP2 **SD Memory Card Controller Response Register 2** **00000000**

Bit	31	30	29	28	27	26	25	24	23	22	21	20	19	18	17	16
Name	RESP_95_64															
Type	RO															
Reset	0	0	0	0	0	0	0	0	0	0	0	0	0	0	0	0
Bit	15	14	13	12	11	10	9	8	7	6	5	4	3	2	1	0
Name	RESP_95_64															
Type	RO															
Reset	0	0	0	0	0	0	0	0	0	0	0	0	0	0	0	0

© 2015 - 2017 MediaTek Inc.

This document contains information that is proprietary to MediaTek Inc. ("MediaTek") and/or its licensor(s).
Any unauthorized use, reproduction or disclosure of this document in whole or in part is strictly prohibited.

Bit(s)	Mnemonic	Name	Description
31:0	**RESP[95:64]**	RESP_95_64	

A002003C SDC_RESP3 **SD Memory Card Controller Response Register 3** **00000000**

Bit	31	30	29	28	27	26	25	24	23	22	21	20	19	18	17	16
Name	RESP_127_96															
Type	RO															
Reset	0	0	0	0	0	0	0	0	0	0	0	0	0	0	0	0
Bit	15	14	13	12	11	10	9	8	7	6	5	4	3	2	1	0
Name	RESP_127_96															
Type	RO															
Reset	0	0	0	0	0	0	0	0	0	0	0	0	0	0	0	0

Bit(s)	Mnemonic	Name	Description
31:0	**RESP[127:96]**	RESP_127_96	

A0020040 SDC_CMDSTA **SD Memory Card Controller Command Status Register** **00000000**

Bit	31	30	29	28	27	26	25	24	23	22	21	20	19	18	17	16
Name																
Type																
Reset																
Bit	15	14	13	12	11	10	9	8	7	6	5	4	3	2	1	0
Name														RSPCRCERR	CMDTO	CMDRDY
Type														RC	RC	RC
Reset														0	0	0

Bit(s)	Mnemonic	Name	Description
2	**RSPCRCERR**	RSPCRCERR	**CRC error on CMD detected. 1 indicates that SD controller detects a CRC error after reading a response from the CMD line.** 0: Otherwise 1: SD controller detects a CRC error after reading a response from the CMD line.

© 2015 - 2017 MediaTek Inc.

This document contains information that is proprietary to MediaTek Inc. ("MediaTek") and/or its licensor(s).
Any unauthorized use, reproduction or disclosure of this document in whole or in part is strictly prohibited.

Bit(s)	Mnemonic	Name	Description
1	**CMDTO**	CMDTO	**Timeout on CMD detected. 1 indicates that SD controller detects a timeout condition while waiting for a response on the CMD line.** 0: Otherwise 1: SD controller detects a timeout condition while waiting for a response on the CMD line.
0	**CMDRDY**	CMDRDY	**For command without response, the register bit will be '1' once the command is completed on SD bus. For command with response, the register bit will be '1' whenever the command is issued onto SD bus and its corresponding response is received without CRC error.** 0: Otherwise 1: Command with/without response finish successfully without CRC error.

A0020044 SDC_DATSTA SD Memory Card Controller Data Status Register 00000000

Bit	31	30	29	28	27	26	25	24	23	22	21	20	19	18	17	16
Name																
Type																
Reset																
Bit	15	14	13	12	11	10	9	8	7	6	5	4	3	2	1	0
Name							**DATCRCERR**								**DATTO**	**BLKDONE**
Type							RC								RC	RC
Reset							0	0	0	0	0	0	0	0	0	0

Bit(s)	Mnemonic	Name	Description
9:2	**DATCRCERR**	DATCRCERR	**CRC error on DAT detected. 1 indicates that SD controller detected a CRC error for bit n after reading a block of data from the DAT line or SD signaled a CRC error after writing a block of data to the DAT line.** 0: Otherwise 1: SD controller detects a CRC error after reading a block of data from the DAT line or SD signaled a CRC error after writing a block of data to the DAT line. Note that: n is 7~0 for 8-bits mode, each bit read and clear individually.
1	**DATTO**	DATTO	**Timeout on DAT detected. 1 indicates that SD controller detected a timeout condition while**

© 2015 - 2017 MediaTek Inc.

This document contains information that is proprietary to MediaTek Inc. (“MediaTek”) and/or its licensor(s).
Any unauthorized use, reproduction or disclosure of this document in whole or in part is strictly prohibited.

Bit(s)	Mnemonic	Name	Description
			waiting for data token on the DAT line. 0: Otherwise 1: SD controller detects a timeout condition while waiting for data token on the DAT line.
0	**BLKDONE**	BLKDONE	**Indicates the status of data block transfer** 0: Otherwise 1: A data block is successfully transferred.

A0020048 SDC_CSTA SD Memory Card Status Register 00000000

Bit	31	30	29	28	27	26	25	24	23	22	21	20	19	18	17	16
Name	CSTA_31_0															
Type	RC															
Reset	0	0	0	0	0	0	0	0	0	0	0	0	0	0	0	0
Bit	15	14	13	12	11	10	9	8	7	6	5	4	3	2	1	0
Name	CSTA_31_0															
Type	RC															
Reset	0	0	0	0	0	0	0	0	0	0	0	0	0	0	0	0

Bit(s)	Mnemonic	Name	Description
31:0	**CSTA [31:0]**	CSTA_31_0	

A002004C SDC_IRQMASK0 SD Memory Card IRQ Mask Register 0 00000000

Bit	31	30	29	28	27	26	25	24	23	22	21	20	19	18	17	16
Name	IRQMASK_31_0															
Type	RW															
Reset	0	0	0	0	0	0	0	0	0	0	0	0	0	0	0	0
Bit	15	14	13	12	11	10	9	8	7	6	5	4	3	2	1	0
Name	IRQMASK_31_0															
Type	RW															
Reset	0	0	0	0	0	0	0	0	0	0	0	0	0	0	0	0

Bit(s)	Mnemonic	Name	Description

© 2015 - 2017 MediaTek Inc.

This document contains information that is proprietary to MediaTek Inc. ("MediaTek") and/or its licensor(s).
Any unauthorized use, reproduction or disclosure of this document in whole or in part is strictly prohibited.

Bit(s)	Mnemonic	Name	Description
31:0	**IRQMASK [31:0]**	IRQMASK_31_0	

A0020050 SDC_IRQMASK1 SD Memory Card IRQ Mask Register 1 00000000

Bit	31	30	29	28	27	26	25	24	23	22	21	20	19	18	17	16
Name	IRQMASK_63_32															
Type	RW															
Reset	0	0	0	0	0	0	0	0	0	0	0	0	0	0	0	0
Bit	15	14	13	12	11	10	9	8	7	6	5	4	3	2	1	0
Name	IRQMASK_63_32															
Type	RW															
Reset	0	0	0	0	0	0	0	0	0	0	0	0	0	0	0	0

Bit(s)	Mnemonic	Name	Description
31:0	**IRQMASK [63:32]**	IRQMASK_63_32	

A0020054 SDIO_CFG SDIO Configuration Register 00000000

Bit	31	30	29	28	27	26	25	24	23	22	21	20	19	18	17	16
Name																
Type																
Reset																
Bit	15	14	13	12	11	10	9	8	7	6	5	4	3	2	1	0
Name											DISSEL		INTCSEL	DSBSEL		INTEN
Type											RW		RW	RW		RW
Reset											0		0	0		0

Bit(s)	Mnemonic	Name	Description
5	**DISSEL**	DISSEL	**Selects data block interrupt source** 0: The host will detect SDIO interrupt during interrupt period between two data blocks of multiple block data access. 1: The host will ignore SDIO interrupt during interrupt period between two data blocks of multiple block data access.
3	**INTCSEL**	INTCSEL	**Selects interrupt control**

© 2015 - 2017 MediaTek Inc.

This document contains information that is proprietary to MediaTek Inc. ("MediaTek") and/or its licensor(s).
Any unauthorized use, reproduction or disclosure of this document in whole or in part is strictly prohibited.

Bit(s)	Mnemonic	Name	Description
			0: The host detects DAT1 low as SDIO interrupt. 1: The host detects DAT3/DAT2/DAT1/DAT0 4'b1101 as SDIO interrupt.
2	**DSBSEL**	DSBSEL	**Selects data block start bit** 0: Use data line 0 as start bit of data block and other data lines are ignored. 1: Start bit of a data block is received only when data line 0-3 all become low.
0	**INTEN**	INTEN	**Enables interrupt for SDIO** 0: Disable 1: Enable

A0020058 SDIO_STA SDIO Status Register 00000000

Bit	31	30	29	28	27	26	25	24	23	22	21	20	19	18	17	16
Name																
Type																
Reset																
Bit	15	14	13	12	11	10	9	8	7	6	5	4	3	2	1	0
Name																IRQ
Type																RO
Reset																0

Bit(s)	Mnemonic	Name	Description
0	**IRQ**	IRQ	**SDIO interrupt exists on the data line. F, for example, during the interrupt period, in the 1 -bit data line mode, and DAT1/5 goes low from high, this bit will become 1 from 0. I, if DAT1/5 goes high from low, this bit will become 0 from 1.** 0: There is no SDIO interrupt existing on the data line. 1: There is SDIO interrupt existing on the data line.

© 2015 - 2017 MediaTek Inc.
This document contains information that is proprietary to MediaTek Inc. ("MediaTek") and/or its licensor(s).
Any unauthorized use, reproduction or disclosure of this document in whole or in part is strictly prohibited.

A0020080 CLK_RED CLK Latch Configuration Register 00000000

Bit	31	30	29	28	27	26	25	24	23	22	21	20	19	18	17	16
Name			CMD_RED													
Type			RW													
Reset			0													
Bit	**15**	**14**	**13**	**12**	**11**	**10**	**9**	**8**	**7**	**6**	**5**	**4**	**3**	**2**	**1**	**0**
Name			DAT_RED						CLKPAD_RED	CLK_LATCH						
Type			RW						RW	RW						
Reset			0						0	0						

Bit(s)	Mnemonic	Name	Description
29	**CMD_RED**	CMD_RED	**Determines command response from card output is latched at falling edge or rising edge of internal clock (only effective when CLK_LATCH = 1)** 0: Internal clock rising edge to latch response 1: Internal clock falling edge to latch response
13	**DAT_RED**	DAT_RED	**Determines input data from card output is latched at falling edge or rising edge of internal sample clock (only effective when CLK_LATCH = 1)** 0: Internal clock rising edge to latch data 1: Internal clock falling edge to latch data
7	**CLKPAD_RED**	CLKPAD_RED	**Determines input data from card is latched at falling edge or rising edge of the feedback clock from pad. The suggested setting is 0 for SD/eMMC serial clock is less than 25MHz and 1 for SD serial clock is higher than 25MHz. (only effective when CLK_LATCH = 0)** 0: Internal feedback clock rising edge to latch data/response 1: Internal feedback clock falling edge to latch data/response
6	**CLK_LATCH**	CLK_LATCH	**Determines which clock to latch data from card. The suggested setting is 0.** 0: Internal feedback clock is used to latch data/response from card. 1: Internal clock is used to latch data/response from card.

© 2015 - 2017 MediaTek Inc.

This document contains information that is proprietary to MediaTek Inc. ("MediaTek") and/or its licensor(s).
Any unauthorized use, reproduction or disclosure of this document in whole or in part is strictly prohibited.

Bit(s)	Mnemonic	Name	Description

A0020098 DAT_CHECKSUM MSDC Rx Data Check Sum Register 00000000

Bit	31	30	29	28	27	26	25	24	23	22	21	20	19	18	17	16
Name	DAT_CHECKSUM															
Type	RW															
Reset	0	0	0	0	0	0	0	0	0	0	0	0	0	0	0	0
Bit	15	14	13	12	11	10	9	8	7	6	5	4	3	2	1	0
Name	DAT_CHECKSUM															
Type	RW															
Reset	0	0	0	0	0	0	0	0	0	0	0	0	0	0	0	0

Bit(s)	Mnemonic	Name	Description
31:0		DAT_CHECKSUM	**The checksum algorithm is 32 bit's XOR.**

© 2015 - 2017 MediaTek Inc.

This document contains information that is proprietary to MediaTek Inc. (“MediaTek”) and/or its licensor(s).
Any unauthorized use, reproduction or disclosure of this document in whole or in part is strictly prohibited.

11. USB2.0 High-Speed Device Controller

11.1. General Description

USB20 controller supports HS (480M)/FS (12M)/LS (1.5M). The USB controller is configured for supporting 2 endpoints to receive packets and four endpoints to send packets except for endpoint 0. These endpoints can be individually configured in the software to handle either Bulk transfers, Interrupt transfers or Isochronous transfers. There are four DMA channels, and the embedded RAM size is configurable up to 3264 bytes. The embedded RAM can be dynamically configured to each endpoint.

11.1.1. Features

Feature	Description
Speed	HS (480M)/FS (12M)/LS (1.5M)
Enhanced feature	Generic device
Endpoint	4 TX, 2 RX
DMA channel	4
Embedded RAM	3264

11.1.2. Programming Guide

DMA: USB20 includes a multi-channel DMA controller, configurable for up to 4 channels. This DMA controller supports two DMA modes, referred to as DMA Modes 0 and 1. When operating in DMA Mode 0, the DMA controller can only be programmed to load/unload one packet, so processor intervention is required for each packet transferred over the USB. This mode can be used with any endpoint, whether it uses Control, Bulk, Isochronous, or Interrupt transactions. When operating in DMA Mode 1, the DMA controller can be programmed to load/unload a complete bulk transfer (which can be many packets). Once set up, the DMA controller will load/unload all packets of the transfer, interrupting the processor only when the transfer has completed. DMA Mode 1 can only be used with endpoints that use Bulk transactions. Each channel can be independently programmed for the selected operating mode. (For detailed register information, refer to USB20 MAC register map.)

© 2015 - 2017 MediaTek Inc.

This document contains information that is proprietary to MediaTek Inc. (“MediaTek”) and/or its licensor(s).
Any unauthorized use, reproduction or disclosure of this document in whole or in part is strictly prohibited.

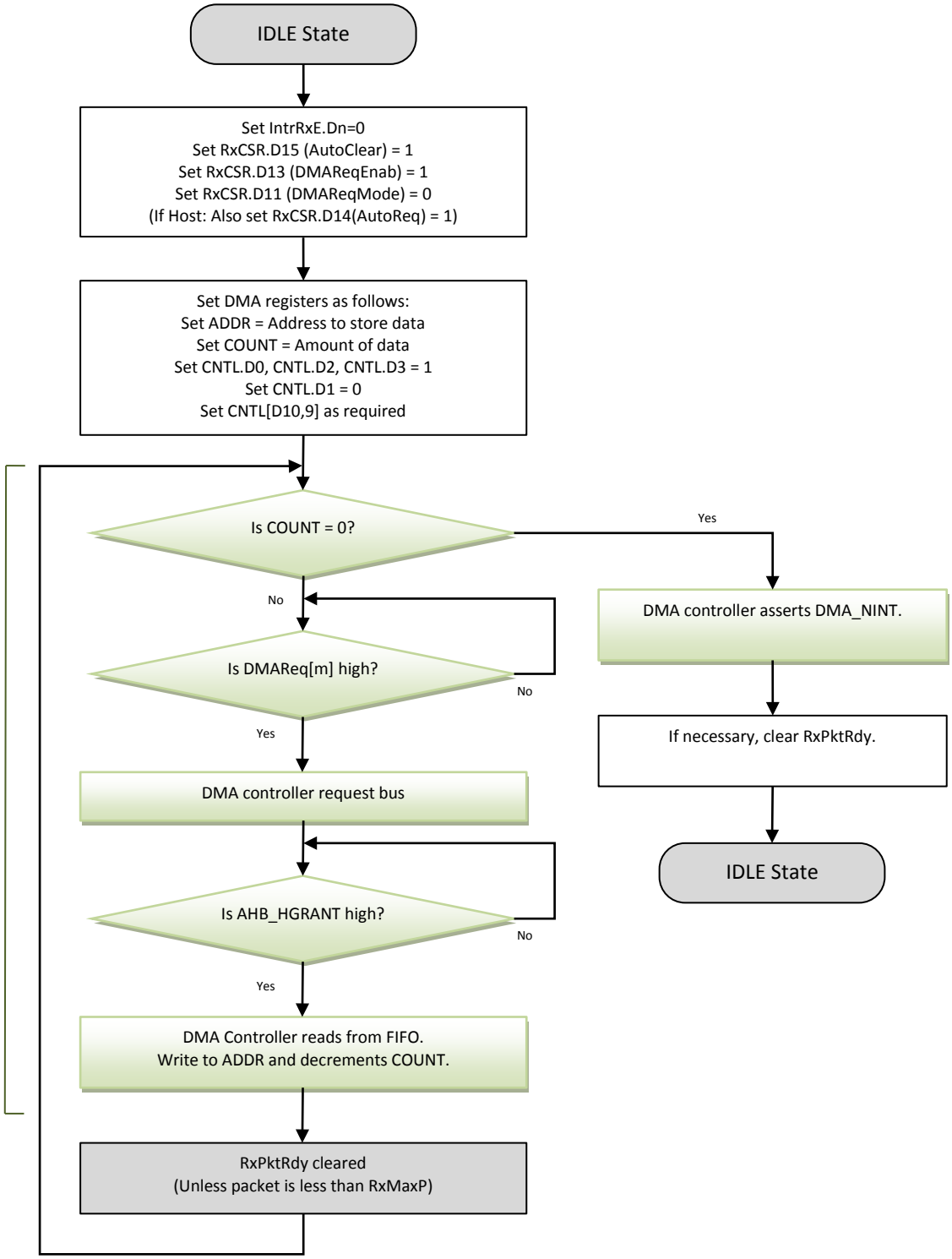

Figure 11-1. Multiple packet RX flow (known size)

© 2015 - 2017 MediaTek Inc.
This document contains information that is proprietary to MediaTek Inc. ("MediaTek") and/or its licensor(s).
Any unauthorized use, reproduction or disclosure of this document in whole or in part is strictly prohibited.

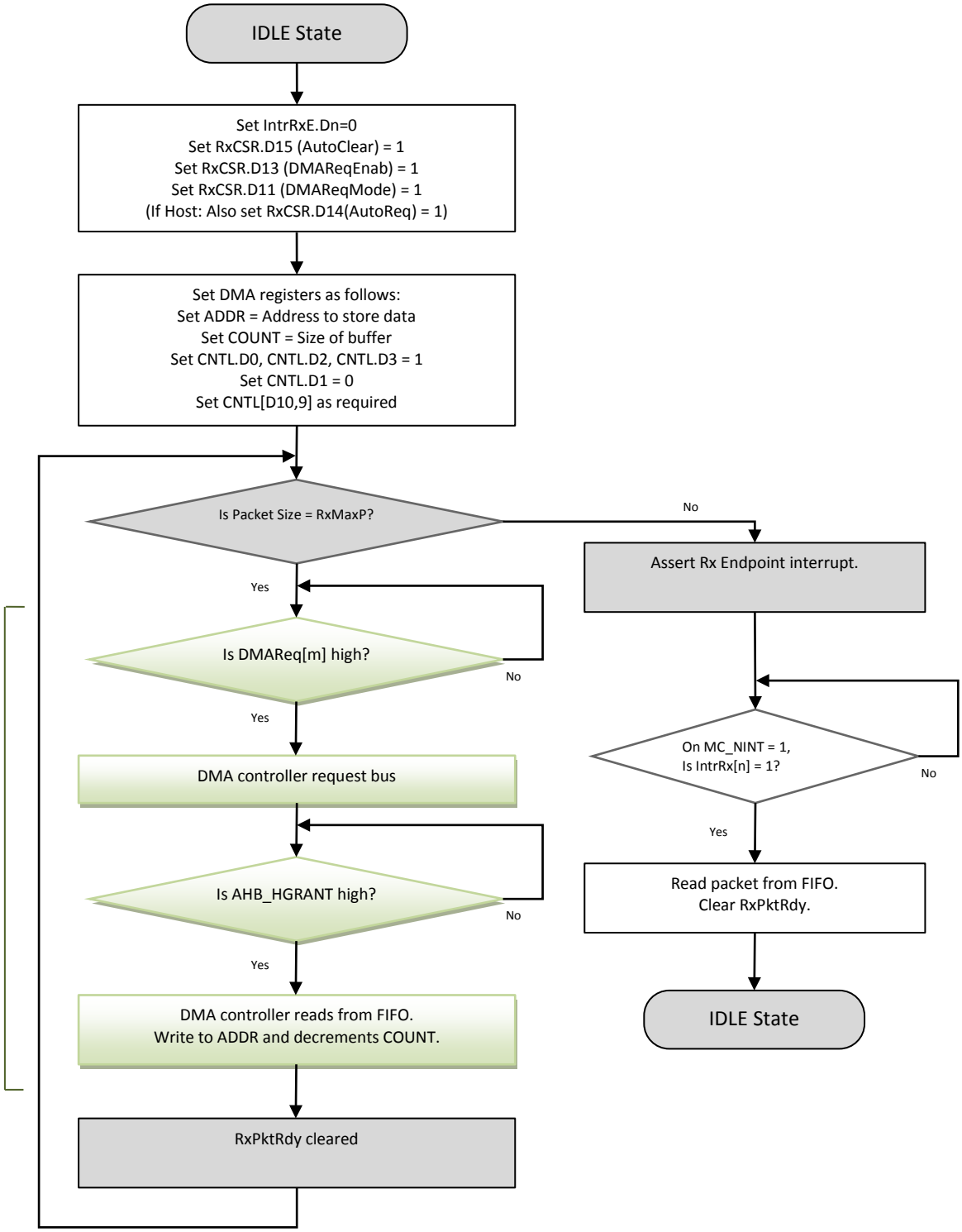

Figure 11-2. Multiple packet RX flow (unknown size)

This document contains information that is proprietary to MediaTek Inc. ("MediaTek") and/or its licensor(s).
Any unauthorized use, reproduction or disclosure of this document in whole or in part is strictly prohibited.

11.1.3. Block Diagram

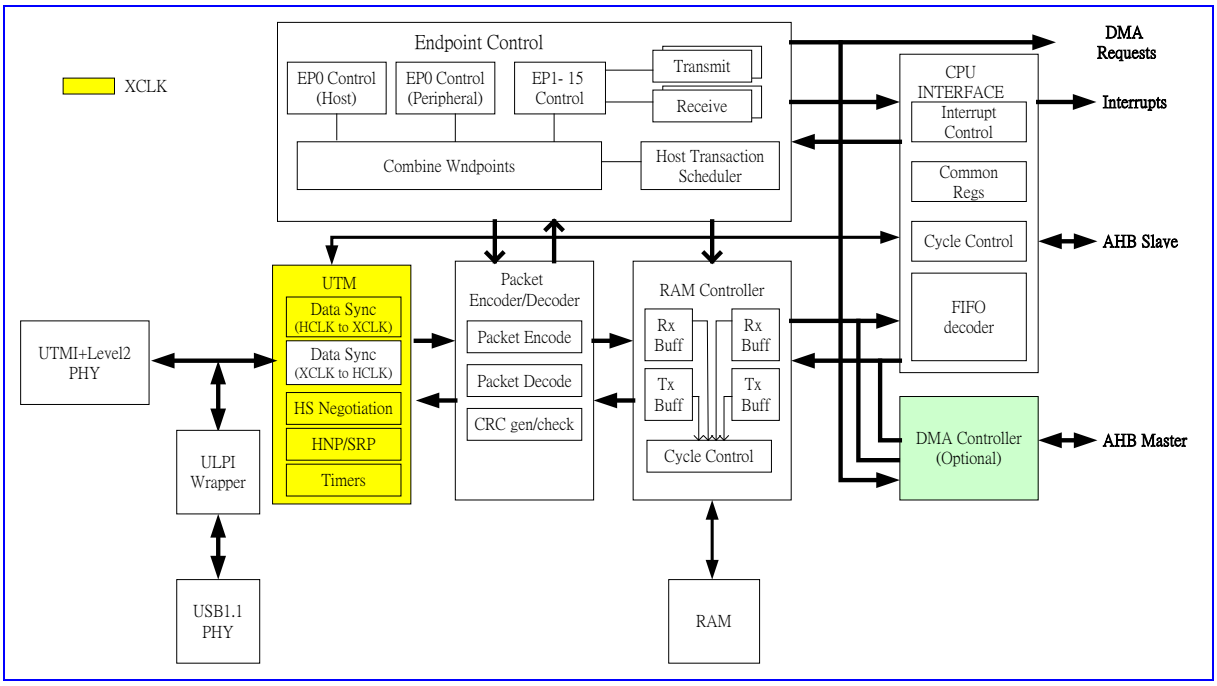

Figure 11-3. Block diagram

11.2. Register Definition

Module name: Unified_USB Base address: (+A0900000h)

Address	Name	Width	Register Function
A0900000	FADDR	8	Function Address Register (Device mode only)
A0900001	POWER_PERI	8	Power Management Register
A0900002	INTRTX	16	Tx Interrupt Status Register
A0900004	INTRRX	16	Rx Interrupt Status Register
A0900006	INTRTXE	16	Tx Interrupt Enable Register
A0900008	INTRRXE	16	Rx Interrupt Enable Register
A090000A	INTRUSB	8	Common USB Interrupt Register
A090000B	INTRUSBE	8	Common USB Interrupt Enable Register
A090000C	FRAME	16	Frame Number Register
A090000E	INDEX	8	Endpoint Selection Index Register
A090000F	TESTMODE	8	Test Mode Enable Register
A0900010	TXMAP	16	TXMAP Register
A0900012	TXCSR_PERI	16	Tx CSR Register
A0900016	RXCSR_PERI	16	RX CSR Register
A0900018	RXCOUNT	16	Rx Count Register
A090001A	TXTYPE	8	TxType Register
A090001B	TXINTERVAL	8	TxInterval Register
A090001C	RXTYPE	8	RxType Register
A090001D	RXINTERVAL	8	RxInterval Register

© 2015 - 2017 MediaTek Inc.
This document contains information that is proprietary to MediaTek Inc. ("MediaTek") and/or its licensor(s).
Any unauthorized use, reproduction or disclosure of this document in whole or in part is strictly prohibited.

Module name: Unified_USB Base address: (+A0900000h)

A090001F	FIFOSIZE	8	Configured FIFO Size Register
A0900020	FIFO0	32	USB Endpoint 0 FIFO Register
A0900024	FIFO1	32	USB Endpoint 1 FIFO Register
A0900028	FIFO2	32	USB Endpoint 2 FIFO Register
A0900060	DEVCTL	8	Device Control Register
A0900061	PWRUPCNT	8	Power Up Counter Register
A0900062	TXFIFOSZ	8	Tx FIFO Size Register
A0900063	RXFIFOSZ	8	Rx FIFO Size Register
A0900064	TXFIFOADD	16	Tx FIFO Address Register
A0900066	RXFIFOADD	16	Rx FIFO Address Register
A090006C	HWCAPS	16	Hardware Capability Register
A090006E	HWSVERS	16	Version Register
A0900070	BUSPERF1	16	USB Bus Performance Register 1
A0900072	BUSPERF2	16	USB Bus Performance Register 2
A0900074	BUSPERF3	16	USB Bus Performance Register 3
A0900078	EPINFO	8	Number of Tx and Rx Register
A0900079	RAMINFO	8	Width of RAM and Number of DMA Channel Register
A090007A	LINKINFO	8	Delay to be Applied Register
A090007B	VPLEN	8	Vbus Pulsing Charge Register
A090007C	HS_EOF1	8	Time Buffer Available on HS Transaction Register
A090007D	FS_EOF1	8	Time Buffer Available on FS Transaction Register
A090007E	LS_EOF1	8	Time Buffer Available on LS Transaction Register
A090007F	RST_INFO	8	Reset Information Register
A0900080	RXTOG	16	Rx Data Toggle Set/Status Register
A0900082	RXTOGEN	16	Rx Data Toggle Enable Register
A0900084	TXTOG	16	Tx Data Toggle Set/Status Register
A0900086	TXTOGEN	16	Tx Data Toggle Enable Register
A09000A0	USB_L1INTS	32	USB Level 1 Interrupt Status Register
A09000A4	USB_L1INTM	32	USB Level 1 Interrupt Mask Register
A09000A8	USB_L1INTP	32	USB Level 1 Interrupt Polarity Register
A09000AC	USB_L1INTC	32	USB Level 1 Interrupt Control Register
A0900102	CSR0_PERI	16	EP0 Control Status Register
A0900108	COUNT0	16	EP0 Received Bytes Register
A090010A	Type0	8	EP0 Type Register
A090010B	NAKLIMT0	8	NAK Limit Register
A090010C	SRAMCONFIG SIZE	16	SRAM Size Register
A090010E	HBCONFIGDA TA	8	High Bind-width Configuration Register
A090010F	CONFIGDATA	8	Core Configuration Register
A0900110	TX1MAP	16	TX1MAP Register
A0900112	TX1CSR_PERI	16	Tx1 CSR Register
A0900114	RX1MAP	16	RX1MAP Register
A0900116	RX1CSR_PERI	16	RX1 CSR Register
A0900118	RX1COUNT	16	Rx1 Count Register
A090011A	TX1TYPE	8	Tx1Type Register
A090011B	TX1INTERVAL	8	Tx1Interval Register

© 2015 - 2017 MediaTek Inc.

This document contains information that is proprietary to MediaTek Inc. ("MediaTek") and/or its licensor(s).
Any unauthorized use, reproduction or disclosure of this document in whole or in part is strictly prohibited.

Module name: Unified_USB Base address: (+A0900000h)

A090011C	RX1TYPE	8	Rx1Type Register
A090011D	RX1INTERVAL	8	Rx1Interval Register
A090011F	FIFOSIZE1	8	EP1 Configured FIFO Size Register
A0900120	TX2MAP	16	TX2MAP Register
A0900122	TX2CSR_PERI	16	Tx2 CSR Register
A0900124	RX2MAP	16	RX2MAP Register
A0900126	RX2CSR_PERI	16	RX2 CSR Register
A0900128	RX2COUNT	16	Rx2 Count Register
A090012A	TX2TYPE	8	Tx2Type Register
A090012B	TX2INTERVAL	8	Tx2Interval Register
A090012C	RX2TYPE	8	Rx2Type Register
A090012D	RX2INTERVAL	8	Rx2Interval Register
A090012F	FIFOSIZE2	8	EP2 Configured FIFO Size Register
A0900130	TX3MAP	16	TX3MAP Register
A0900132	TX3CSR_PERI	16	Tx3 CSR Register
A090013A	TX3TYPE	8	Tx3Type Register
A090013B	TX3INTERVAL	8	Tx3Interval Register
A090013F	FIFOSIZE3	8	EP3 Configured FIFO Size Register
A0900140	TX4MAP	16	TX4MAP Register
A0900142	TX4CSR_PERI	16	Tx4 CSR Register
A090014A	TX4TYPE	8	Tx4Type Register
A090014B	TX4INTERVAL	8	Tx4Interval Register
A090014F	FIFOSIZE4	8	EP4 Configured FIFO Size Register
A0900200	DMA_INTR	32	DMA Interrupt Status Register
A0900204	DMA_CNTL_0	16	DMA Channel 0 Control Register
A0900208	DMA_ADDR_0	32	DMA Channel 0 Address Register
A090020C	DMA_COUNT_0	32	DMA Channel 0 Byte Count Register
A0900210	DMA_LIMITER	32	DMA Limiter Register
A0900214	DMA_CNTL_1	16	DMA Channel 1 Control Register
A0900218	DMA_ADDR_1	32	DMA Channel 1 Address Register
A090021C	DMA_COUNT_1	32	DMA Channel 1 Byte Count Register
A0900220	DMA_CONFIG	32	DMA Configuration Register
A0900224	DMA_CNTL_2	16	DMA Channel 2 Control Register
A0900228	DMA_ADDR_2	32	DMA Channel 2 Address Register
A090022C	DMA_COUNT_2	32	DMA Channel 2 Byte Count Register
A0900234	DMA_CNTL_3	16	DMA Channel 3 Control Register
A0900238	DMA_ADDR_3	32	DMA Channel 3 Address Register
A090023C	DMA_COUNT_3	32	DMA Channel 3 Byte Count Register
A0900304	EP1RXPKTCOUNT	16	EP1 RxPktCount Register

© 2015 - 2017 MediaTek Inc.

This document contains information that is proprietary to MediaTek Inc. ("MediaTek") and/or its licensor(s).
Any unauthorized use, reproduction or disclosure of this document in whole or in part is strictly prohibited.

Module name: Unified_USB Base address: (+A0900000h)

A0900308	EP2RXPKTCOUNT	16	EP2 RxPktCount Register
A0900604	TM1	16	Test Mode 1 Register
A0900608	HWVER_DATE	32	HW Version Control Register
A0900684	SRAMA	32	SRAM Address Register
A0900688	SRAMD	32	SRAM Data Register
A0900690	RISC_SIZE	32	RISC Size Register
A0900700	RESREG	32	Reserved Register
A0900730	OTG20_CSRL	8	OTG20 Related Control Register L
A0900731	OTG20_CSRH	8	OTG20 Related Control Register H

A0900000 FADDR Function Address Register (Device mode only) 00

Bit	15	14	13	12	11	10	9	8	7	6	5	4	3	2	1	0
Name										FUNCTION_ADDRESS						
Type										RW						
Reset										0	0	0	0	0	0	0

Bit(s)	Name	Description
6:0	FUNCTION_ADDRESS	FAddr is an 8-bit register that should be written with the 7-bit address of the peripheral part of the transaction. When the USB2.0 controller is used in Peripheral mode (DevCtl.bit2=0), this register should be written with the address received through a SET_ADDRESS command, which will then be used for decoding the function address in subsequent token packets. When the USB2.0 controller is used in host mode (DevCtl.bit2=1), function address will be configured by TXFUNCADDR and RXFUNCADDR.

A0900001 POWER_PERI Power Management Register 20

Bit	15	14	13	12	11	10	9	8	7	6	5	4	3	2	1	0
Name									ISOUPDATE	SOFTCONN	HSENAB	HSMODE	RESET	RESUME	SUSPENDMODE	ENABLESUSPENDM
Type									RW	RW	RW	RU	RU	RW	RU	RW
Reset									0	0	1	0	0	0	0	0

Bit(s)	Name	Description
7	ISOUPDATE	**When set by the CPU, the USB2.0 controller will wait for an SOF token from the time TxPktRdy is set before sending the packet. If an IN token is received before an SOF token, a 0 length data packet will be sent.** Note: Only valid in peripheral mode. This bit only affects endpoints performing Isochronous transfers.
6	SOFTCONN	**If Soft Connect/Disconnect feature is enabled, the USB D+/D- lines will be enabled when this bit is set by the CPU and tri-stated when this bit is cleared by the CPU.** In Peripheral FS mode, clearing Softcon bit may need execution of latency until

© 2015 - 2017 MediaTek Inc.

This document contains information that is proprietary to MediaTek Inc. ("MediaTek") and/or its licensor(s).
Any unauthorized use, reproduction or disclosure of this document in whole or in part is strictly prohibited.

Bit(s)	Name	Description
		USB BUS SE0 is detected by HW. Execution Latency ~= 1ms, such as SOF Packet EOP or RESET In Peripheral HS mode, clearing Softcon bit still needs execution of latency until USB BUS SE0 is detected by HW. Execution Latency ~= 1us, such as HS idle Note: This bit should only be set in peripheral mode. For host mode, this bit will be set if DEVCTL[0] session bit is set. This bit should also be cleared if session bit is cleared by CPU.
5	HSENAB	**When set by the CPU, the USB2.0 controller will negotiate for high-speed mode when the device is reset by the hub. If not set, the device will only operate in full-speed mode.**
4	HSMODE	**When set, this read-only bit indicates high-speed mode successfully negotiated during USB reset.** In peripheral mode, becomes valid when USB reset is completed (as indicated by USB reset interrupt). In host mode, becomes valid when Reset bit is cleared. Remains valid for the duration of the session. Note: Allowance is made for Tiny-J signaling in determining the transfer speed to select.
3	RESET	**This bit is set when Reset signaling is present on the bus.** Note: This bit is read/written from the CPU in host mode but read-only in peripheral mode.
2	RESUME	**Set by the CPU to generate Resume signaling when the function is in suspend mode. The CPU should clear this bit after 10ms (max. 15ms) to end Resume signaling. In host mode, this bit is also automatically set when Resume signaling from the target is detected when the USB2.0 controller is suspended.**
1	SUSPENDMODE	**In host mode, this bit is set by the CPU to enter suspend mode.** In peripheral mode, this bit is set on entryo into suspend mode. Cleared when the CPU reads the interrupt register or sets up the Resume bit above.
0	ENABLESUSPENDM	**Set by the CPU to enable the SUSPENDM output**

A0900002 **INTRTX** **Tx Interrupt Status Register** **0000**

Bit	15	14	13	12	11	10	9	8	7	6	5	4	3	2	1	0
Name												**EP4_TX**	**EP3_TX**	**EP2_TX**	**EP1_TX**	**EP0**
Type												W1C	W1C	W1C	W1C	W1C
Reset												0	0	0	0	0

Bit(s)	Name	Description
4	EP4_TX	**T4 Endpoint N interrupt event**
3	EP3_TX	**T3 Endpoint N interrupt event**
2	EP2_TX	**T2 Endpoint N interrupt event**
1	EP1_TX	**T1 Endpoint N interrupt event.**
0	EP0	**Endpoint 0 interrupt event**

© 2015 - 2017 MediaTek Inc.

This document contains information that is proprietary to MediaTek Inc. ("MediaTek") and/or its licensor(s).
Any unauthorized use, reproduction or disclosure of this document in whole or in part is strictly prohibited.

A0900004 **INTRRX** **Rx Interrupt Status Register** **0000**

Bit	15	14	13	12	11	10	9	8	7	6	5	4	3	2	1	0
Name														EP2_RX	EP1_RX	
Type														W1C	W1C	
Reset														0	0	

Bit(s)	Name	Description
2	EP2_RX	**R2 Endpoint N interrupt event**
1	EP1_RX	**R1 Endpoint N interrupt event**

A0900006 **INTRTXE** **Tx Interrupt Enable Register** **FFFF**

Bit	15	14	13	12	11	10	9	8	7	6	5	4	3	2	1	0
Name												EP4_TXE	EP3_TXE	EP2_TXE	EP1_TXE	EP0_E
Type												RW	RW	RW	RW	RW
Reset												1	1	1	1	1

Bit(s)	Name	Description
4	EP4_TXE	1'b0: Disable Tx Endpoint N interrupt event 1'b1: Enable Tx Endpoint N interrupt event
3	EP3_TXE	1'b0: Disable Tx Endpoint N interrupt event 1'b1: Enable Tx Endpoint N interrupt event
2	EP2_TXE	1'b0: Disable Tx Endpoint N interrupt event 1'b1: Enable Tx Endpoint N interrupt event
1	EP1_TXE	1'b0: Disable Tx Endpoint N interrupt event 1'b1: Enable Tx Endpoint N interrupt event
0	EP0_E	1'b0: Disable Tx Endpoint N interrupt event 1'b1: Enable Tx Endpoint N interrupt event

A0900008 **INTRRXE** **Rx Interrupt Enable Register** **FFFE**

Bit	15	14	13	12	11	10	9	8	7	6	5	4	3	2	1	0
Name														EP2_RXE	EP1_RXE	
Type														RW	RW	
Reset														1	1	

Bit(s)	Name	Description
2	EP2_RXE	1'b0: Disable Rx Endpoint N interrupt event 1'b1: Enable Rx Endpoint N interrupt event
1	EP1_RXE	1'b0: Disable Rx Endpoint N interrupt event 1'b1: Enable Rx Endpoint N interrupt event

© 2015 - 2017 MediaTek Inc.

This document contains information that is proprietary to MediaTek Inc. (“MediaTek”) and/or its licensor(s).
Any unauthorized use, reproduction or disclosure of this document in whole or in part is strictly prohibited.

A090000A **INTRUSB** **Common USB Interrupt Register** **00**

Bit	15	14	13	12	11	10	9	8	7	6	5	4	3	2	1	0
Name									VBUSERROR	SESSREQ	DISCON	CONN	SOF	RESET_BABLE	RESUME	SUSPEND
Type									W1C	W1C	W1C	W1C	W1C	W1C	W1C	W1C
Reset									0	0	0	0	0	0	0	0

Bit(s)	Name	Description
7	VBUSERROR	**Set when VBus drops below the VBus Valid threshold during a session** Only valid when USB2.0 controller is 'A' device.
6	SESSREQ	**Set when Session Request signaling has been detected** Only valid when USB2.0 controller is 'A' device.
5	DISCON	**Set in host mode when a device disconnect is detected. Set in peripheral mode when a session ends.** Valid at all transaction speeds.
4	CONN	**Set when a device connection is detected** Only valid in host mode. Valid at all transaction speeds.
3	SOF	**Set when a new frame starts.**
2	RESET_BABLE	**Set in peripheral mode when Reset signaling is detected on the bus. Set in host mode when babble is detected.** Note: Only active after the first SOF has been sent.
1	RESUME	**Set when Resume signaling is detected on the bus when the USB2.0 controller is in suspend mode.**
0	SUSPEND	**Set when Suspend signaling is detected on the bus** Only valid in peripheral mode.

A090000B **INTRUSBE** **Common USB Interrupt Enable Register** **06**

Bit	15	14	13	12	11	10	9	8	7	6	5	4	3	2	1	0
Name									VBUSERROR_E	SESSREQ_E	DISCON_E	CONN_E	SOF_E	RESET_BABLE_E	RESEUM_E	SUSPEND_E
Type									RW	RW	RW	RW	RW	RW	RW	RW
Reset									0	0	0	0	0	1	1	0

Bit(s)	Name	Description
7	VBUSERROR_E	**Enables VBusError interrupt**
6	SESSREQ_E	**Enables SessReq interrupt**
5	DISCON_E	**Enables Discon interrupt**
4	CONN_E	**Enables Conn interrupt**
3	SOF_E	**Enables SOF interrupt**
2	RESET_BABLE_E	**Enables Reset/Babble interrupt**
1	RESEUM_E	**Enables Resume interrupt**
0	SUSPEND_E	**Enables Suspend interrupt**

© 2015 - 2017 MediaTek Inc.

This document contains information that is proprietary to MediaTek Inc. ("MediaTek") and/or its licensor(s).
Any unauthorized use, reproduction or disclosure of this document in whole or in part is strictly prohibited.

A090000C **FRAME** **Frame Number Register** **0000**

Bit	15	14	13	12	11	10	9	8	7	6	5	4	3	2	1	0
Name						FRAME_NUMBER										
Type						RU										
Reset						0	0	0	0	0	0	0	0	0	0	0

Bit(s)	Name	Description
10:0	FRAME_NUMBER	**Frame is a 11-bit read-only register that holds the last received frame number.**

A090000E **INDEX** **Endpoint Selection Index Register** **00**

Bit	15	14	13	12	11	10	9	8	7	6	5	4	3	2	1	0
Name													SELECTED_ENDPOINT			
Type													RW			
Reset													0	0	0	0

Bit(s)	Name	Description
3:0	SELECTED_ENDPOINT	**Each TX endpoint and RX endpoint has its own set of control/status registers located between USB+100h - USB+1FFh. In addition, one set of TX control/status and one set of RX control/status registers appear at USB+010h - USB+01Fh. Index is a 4-bit register that determines which endpoint control/status registers are accessed. Before accessing an endpoint's control/status registers at USB+010h - USB+01Fh, the endpoint number should be written to the Index register to ensure that the correct control/status registers appear in the memory map.**

A090000F **TESTMODE** **Test Mode Enable Register** **00**

Bit	15	14	13	12	11	10	9	8	7	6	5	4	3	2	1	0
Name									FORCE_HOST	FIFO_ACCESS	FORCE_FS	FORCE_HS	TEST_PACKET	TEST_K	TEST_J	TEST_SE0_NAK
Type									RW	A0	RW	RW	RW	RW	RW	RW
Reset									0	0	0	0	0	0	0	0

Bit(s)	Name	Description
7	FORCE_HOST	**The CPU sets up this bit to instruct the core to enter host mode when the Session bit is set, regardless of whether it is connected to any peripheral. The state of the CID input, HostDisconnect and LineState signals are ignored. The core will then remain in host mode until the Session bit is cleared, even if a device is disconnected, and if the Force_Host bit remains set, will re-enter host mode the next time the Session bit is set. When in this mode, the status of the HOSTDISCON signal from the PHY may be read from bit7 of the ACTLR0.DevCtl register. The operating speed is determined by the Force_HS and Force_FS bits as the following. USB2.0 IP only** Force_HS Force_FS Operating Speed 0 0 Low Speed 0 1 Full Speed 1 0 High Speed

© 2015 - 2017 MediaTek Inc.

This document contains information that is proprietary to MediaTek Inc. ("MediaTek") and/or its licensor(s).
Any unauthorized use, reproduction or disclosure of this document in whole or in part is strictly prohibited.

Bit(s)	Name	Description
		1 1 Undefined
6	FIFO_ACCESS	**The CPU sets up this bit to transfer the packet in Endpoint 0 TX FIFO to Endpoint 0 RX FIFO. It is cleared automatically. USB2.0 IP only.**
5	FORCE_FS	**The CPU sets up this bit either in conjunction with bit7 above or to force the USB2.0 controller into full-speed mode when it receives a USB reset.**
4	FORCE_HS	**The CPU sets up this bit either in conjunction with bit7 above or to force the USB2.0 controller into high-speed mode when it receives a USB reset. USB2.0 IP only.**
3	TEST_PACKET	**(HS_MODE) The CPU sets up this bit to enter Test_Packet test mode. In this mode, the USB2.0 controller repetitively transmits on the bus a 53-byte test packet, the form of which is defined in the Universal Serial Bus Specification Revision 2.0, Section 7.1.20.** **Note: The test packet has a fixed format and must be loaded into Endpoint 0 FIFO before the test mode is entered. USB2.0 IP only.**
2	TEST_K	**(HS_MODE) The CPU sets up this bit to enter Test_K test mode. In this mode, the USB2.0 controller transmits a continuous K on the bus. USB2.0 IP only.**
1	TEST_J	**(HS_MODE) The CPU sets up this bit to enter Test_J test mode. In this mode, the USB2.0 controller transmits a continuous J on the bus. USB2.0 IP only.**
0	TEST_SE0_NAK	**(HS_MODE) The CPU sets up this bit to enter Test_SE0_NAK test mode. In this mode, the USB2.0 controller remains in high-speed mode but responds to any valid IN token with a NAK. USB2.0 IP only.**

A0900010 **TXMAP** **TXMAP Register** **0000**

Bit	15	14	13	12	11	10	9	8	7	6	5	4	3	2	1	0
Name				M_1		MAXIMUM_PAYLOAD_TRANSACTION										
Type				RW		RW										
Reset				0	0	0	0	0	0	0	0	0	0	0	0	0

Bit(s)	Name	Description
12:11	M_1	**Maximum payload size for indexed TX endpoint, M-1 Packet multiplier m maximum payload transaction register**
10:0	MAXIMUM_PAYLOAD_TRANSACTION	**The TxMaxP register defines the maximum amount of data that can be transferred through the selected TX endpoint in a single operation. There is a TxMaxP register for each TX endpoint (except for Endpoint 0). Bit10~0 define (in bytes) the maximum payload transmitted in a single transaction. The value set can be up to 1024 bytes but is subject to the constraints placed by the USB Specification on packet sizes for Bulk, Interrupt and Isochronous transfers in full-speed and high-speed operations. Where the option of high-bandwidth Isochronous endpoints or of packet splitting on Bulk endpoints has been taken when the core is configured, the register includes either 2 or 5 further bits that define a multiplier m which is equal to one more than the value recorded. In the case of Bulk endpoints with the packet splitting option enabled, the multiplier m can be up to 32 and defines the maximum number of 'USB' packets (i.e. packets for transmission over the USB) of the specified payload into which a single data packet placed in the FIFO should be split, prior to transfer. (If the packet splitting option is not enabled, bit15-13 will not be implemented and bit12-11 (if included) will be ignored.)** Note: The data packet is required to be an exact multiple of the payload specified by bit10~0, which is itself required to be one of 8, 16, 32, 64 or (in the case of high speed transfers) 512 bytes. For Isochronous endpoints operating in high-speed mode and with the high-bandwidth option enabled, m may only be either 2 or 3 (corresponding to bit 11 set or bit 12 set, respectively) and it specifies the

This document contains information that is proprietary to MediaTek Inc. ("MediaTek") and/or its licensor(s).
Any unauthorized use, reproduction or disclosure of this document in whole or in part is strictly prohibited.

Bit(s)	Name	Description
		maximum number of such transactions that can take place in a single microframe. If either bit11 or bit12 is non-0, the USB2.0 controller will automatically split any data packet written to the FIFO into up to 2 or 3 'USB' packets, each containing the specified payload (or less). The maximum payload for each transaction is 1024 bytes, so this allows up to 3072 bytes to be transmitted in each microframe. (For Isochronous/Interrupt transfers in full-speed mod, bits11 and 12 are ignored.) The value written to bit10~0 (multiplied by m in the case of high-bandwidth Isochronous transfers) should match the value given in the wMaxPacketSize field of the Standard Endpoint Descriptor for the associated endpoint (see USB Specification Revision 2.0, Chapter 9). A mismatch will cause unexpected results. The total amount of data represented by the value written to this register (specified payload * m) should not exceed the FIFO size for the TX endpoint and should not exceed half the FIFO size if double-buffering is required. If this register is changed after packets have been sent from the endpoint, the TX endpoint FIFO should be completely flushed (using the FlushFIFO bit in TxCSR) after writing the new value to this register.

A0900012 TXCSR_PERI Tx CSR Register 0000

Bit	15	14	13	12	11	10	9	8	7	6	5	4	3	2	1	0
Name	AUTOSET	ISO		DMAREQEN	FRCDATATOG	DMAREQMODE		SETTXPKTRDY_TWICE	INCOMPTX	CLRDATATOG	SENTSTALL	SENDSTALL	FLUSHFIFO	UNDERRUN	FIFONOTEMPTY	TXPKTRDY
Type	RW	RW		RW	RW	RW		A1	A1	A0	A1	RW	A0	A1	RU	A0
Reset	0	0		0	0	0		0	0	0	0	0	0	0	0	0

Bit(s)	Name	Description
15	AUTOSET	**If The CPU sets up this bit, TxPktRdy will be automatically set when data of the maximum packet size (value in TxMaxP) is loaded into the TxFIFO. If a packet of less than the maximum packet size is loaded, TxPktRdy will have to be set manually.**
14	ISO	**The CPU sets up this bit to enable the TX endpoint for Isochronous transfers and clears it to enable the TX endpoint for Bulk or Interrupt transfers.** **Note: This bit only takes effect in peripheral mode. In host mode, it always returns 0.**
12	DMAREQEN	**The CPU sets up this bit to enable the DMA request for TX endpoint.**
11	FRCDATATOG	**The CPU sets up this bit to force the endpoint data toggle to switch and the data packet to be cleared from the FIFO, regardless of whether an ACK is received. This can be used by Interrupt TX endpoints used to communicate rate feedback for Isochronous endpoints.**
10	DMAREQMODE	**The CPU sets up this bit to select DMA request mode 1 and clears it to select DMA request mode 0.** Note: This bit should not be cleared either before or in the same cycle as the DMAReqEn bit is cleared.
8	SETTXPKTRDY_TWICE	**Indicates TxPktRdy had been set while it is 1'b1 already. Write 0 to clear it.**
7	INCOMPTX	**When the endpoint is used for high-bandwidth Isochronous/Interrupt transfers, this bit will be set to indicate where a large packet has been split into 2 or 3 packets for transmission but insufficient IN tokens have been received to send all the parts.** **Note: In anything other than a high-bandwidth transfer, this bit will always return 0.**

This document contains information that is proprietary to MediaTek Inc. ("MediaTek") and/or its licensor(s).
Any unauthorized use, reproduction or disclosure of this document in whole or in part is strictly prohibited.

Bit(s)	Name	Description
		Write 0 to clear it.
6	CLRDATATOG	**The CPU writes 1 to this bit to reset the endpoint data toggle to 0.**
5	SENTSTALL	**This bit is set when a STALL handshake is transmitted. The FIFO will be flushed and TX interrupt generated if enabled and the TxPktRdy bit is cleared. The CPU should clear this bit.** Write 0 to clear it.
4	SENDSTALL	**The CPU writes 1 to this bit to issue a STALL handshake to an IN token. The CPU clears this bit to terminate the stall condition.** **Note: This bit has no effect where the endpoint is used for Isochronous transfer. Otherwise, CPU should wait for SENTSTALL interrupt to be generated before clearing the SENDSTALL bit.**
3	FLUSHFIFO	**The CPU writes 1 to this bit to flush the latest packet from the endpoint TxFIFO. The FIFO pointer is reset, the TxPktRdy bit is cleared, and an interrupt is generated. May be set simultaneously with TxPktRdy to abort the packet that is currently loaded into the FIFO.** Note: FlushFIFO should only be used when TxPktRdy is set. In other cases, it may cause data corruption. If the FIFO is double-buffered, FlushFIFO may need to be set twice to completely clear the FIFO.
2	UNDERRUN	**The USB sets up this bit if an IN token is received when the TxPktRdy bit not set. The CPU should clear this bit. Write 0 to clear it.**
1	FIFONOTEMPTY	**The USB sets up this bit when there is at least 1 packet in the TxFIFO. This bit will be asserted automatically when TXPKTRDY is set by CPU and de-asserted when CPU flushes FIFO or sends a STALL packet.**
0	TXPKTRDY	**The CPU sets up this bit after loading a data packet into the FIFO. It is cleared automatically when a data packet has been transmitted. An interrupt is also generated at this point (if enabled). TxPktRdy is also automatically cleared (interrupt is generated) prior to loading a second packet into a double-buffered FIFO.**

A0900014 **RXMAP** **RXMAP Register** **0000**

Bit	15	14	13	12	11	10	9	8	7	6	5	4	3	2	1	0
Name				M_1		MAXIMUM_PAYLOAD_TRANSACTION										
Type				RW		RW										
Reset				0	0	0	0	0	0	0	0	0	0	0	0	0

Bit(s)	Name	Description
12:11	M_1	**Maximum payload size for indexed RX endpoint , M-1 Packet multiplier m**
10:0	MAXIMUM_PAYLOAD_TRANSACTION	**The RxMaxP register defines the maximum amount of data that can be transferred through the selected RX endpoint in a single operation. There is a RxMaxP register for each RX endpoint (except for Endpoint 0). Bit10~0 define (in bytes) the maximum payload transmitted in a single transaction. The value set can be up to 1024 bytes but is subject to the constraints placed by the USB Specification on packet sizes for Bulk, Interrupt and Isochronous transfers in full-speed and high-speed operations.** Where the option of high-bandwidth Isochronous endpoints or of combining Bulk packets has been taken when the core is configured, the register includes either 2 or 5 further bits that define a multiplier m which is equal to one more than the value recorded. For Bulk endpoints with the packet combining option enabled, the multiplier m can be up to 32 and defines the number of USB packets of the specified payload which are to be combined into a single data packet within the FIFO. (If the packet splitting option is not enabled, bit15-bit13 will not be implemented and bit12-bit11 (if included) will be ignored.) For Isochronous endpoints operating in high-speed mode and with the high-bandwidth option enabled, m may only be either 2 or 3 (corresponding to bit 11 set or bit 12 set, respectively) and it

This document contains information that is proprietary to MediaTek Inc. ("MediaTek") and/or its licensor(s).
Any unauthorized use, reproduction or disclosure of this document in whole or in part is strictly prohibited.

Bit(s)	Name	Description
		specifies the maximum number of such transactions that can take place in a single microframe. If either bit 11 or bit 12 is non-0, the USB2.0 controller will automatically combine the separate USB packets received in any microframe into a single packet within the Rx FIFO. The maximum payload for each transaction is 1024 bytes, so this allows up to 3072 bytes to be received in each microframe. (For Isochronous/Interrupt transfers in full-speed mode or if high-bandwidth is not enabled, bits 11 and 12 are ignored.) The value written to bit10~0 (multiplied by m in the case of high-bandwidth Isochronous transfers) must match the value given in the wMaxPacketSize field of the Standard Endpoint Descriptor for the associated endpoint (see USB Specification Revision 2.0, Chapter 9). A mismatch will cause unexpected results. The total amount of data represented by the value written to this register (specified payload * m) should not exceed the FIFO size for the OUT endpoint, and should not exceed half the FIFO size if double-buffering is required.

A0900016 RXCSR_PERI RX CSR Register 0000

Bit	15	14	13	12	11	10	9	8	7	6	5	4	3	2	1	0
Name	AUTOCLEAR	ISO	DMAREQEN	DISNYET_PIDERR	DMAREQMODE		KEEPERRSTATUS	INCOMPRX	CLRDATATOG	SENTSTALL	SENDSTALL	FLUSHFIFO	DATAERR	OVERRUN	FIFOFULL	RXPKTRDY
Type	RW	RW	RW	RW	RW		RW	A1	A0	A1	RW	A0	RU	A1	RU	A1
Reset	0	0	0	0	0		0	0	0	0	0	0	0	0	0	0

Bit(s)	Name	Description
15	AUTOCLEAR	**If the CPU sets up this bit, the RxPktRdy bit will be automatically cleared when a packet of RxMaxP bytes has been unloaded from the RxFIFO. When packets of less than the maximum packet size are unloaded, RxPktRdy will have to be cleared manually.** Note: Maximum packet size-3,-2,-1 is handled like maximum packet size which is auto cleared by hardware.
14	ISO	**The CPU sets up this bit to enable the Rx endpoint for Isochronous transfers and clears it to enable the Rx endpoint for Bulk/Interrupt transfers.**
13	DMAREQEN	**The CPU sets up this bit to enable the DMA request for the Rx endpoint.**
12	DISNYET_PIDERR	**The CPU sets up this bit to disable the sending of NYET handshakes. When set, all successfully received Rx packets will be ACK'd including at the point at which the RxFIFO becomes full.** **Note: This bit only takes effect in high-speed mode, in which it should be set for all interrupt endpoints.** This bit is set when there is a PID error in the received packet. It is cleared when RxPktRdy is cleared or write 0 to clear it.
11	DMAREQMODE	**The CPU sets up this bit to select DMA Request Mode 1 and clears it to select DMA Request Mode 0.** DMA Request Mode 1: Rx endpoint interrupt is generated only when DMA Request Mode 1 receives a short packet. RxDMAReq is generated when receiving a Max-Packet-size packet. DMA Request Mode 0: No Rx endpoint interrupt. RxDMAReq is generated when RxPktRdy is set.
9	KEEPERRSTATUS	**This bit is used when endpoint works with USBQ and in ISOCHRONOUS mode. When this bit is set, the isochronous error, PIDERROR, INCOMPRX and DATAERROR will be kept and only cleared by SW.**

This document contains information that is proprietary to MediaTek Inc. ("MediaTek") and/or its licensor(s).
Any unauthorized use, reproduction or disclosure of this document in whole or in part is strictly prohibited.

Bit(s)	Name	Description
8	INCOMPRX	**This bit is set in an isochronous transfer if the packet in RxFIFO is incomplete because parts of the data are not received. When KeepErrorStatus = 0, it will be cleared when RxPktRdy is cleared or write 0 to clear it.** Note: In anything other than an isochronous transfer, this bit will always return 0. Write 0 to clear it.
7	CLRDTATOG	**The CPU writes 1 to this bit to reset the endpoint data toggle to 0.**
6	SENTSTALL	**This bit is set when a STALL handshake is transmitted. The CPU should clear this bit. An interrupt will be generated when the bit is set.** Write 0 to clear it.
5	SENDSTALL	**The CPU writes 1 to this bit to issue a STALL handshake. The CPU clears this bit to terminate the stall condition.** Note: This bit has no effect where the endpoint is used for ISO transfers.
4	FLUSHFIFO	**The CPU writes 1 to this bit to flush the next packet to be read from the endpoint RxFIFO. The RxFIFO pointer is reset and the RxPktRdy bit is cleared.** Note: FlushFIFO should only be used when RxPktRdy is set. In other cases, it may cause data corruption. If RxFIFO is double buffered, FlushFIFO may need to be set twice to completely clear RxFIFO.
3	DATAERR	**This bit is set when RxPktRdy is set if the data packet has a CRC or bit-stuff error in it. It is cleared when RxPktRdy is cleared.** **Note: This bit is only valid when the endpoint operates in ISO mode. In Bulk mode, it always returns to 0.**
2	OVERRUN	**This bit will be set if an OUT packet cannot be loaded into RxFIFO. The CPU should clear this bit (write 0 to clear it).** Note: This bit is only valid when the endpoint operates in ISO mode. In Bulk mode, it always returns to 0. The new incoming packet will not be written to RxFIFO. Write 0 to clear it.
1	FIFOFULL	**This bit is set when no more packets can be loaded into RxFIFO.**
0	RXPKTRDY	**This bit is set when a data packet has been received (to RxFIFO). The CPU should clear this bit when the packet has been unloaded from RxFIFO. An interrupt will be generated when the bit is set.** Write 0 to clear it.

A0900018 RXCOUNT Rx Count Register 0000

Bit	15	14	13	12	11	10	9	8	7	6	5	4	3	2	1	0
Name			RXCOUNT													
Type			RU													
Reset			0	0	0	0	0	0	0	0	0	0	0	0	0	0

Bit(s)	Name	Description
13:0	RXCOUNT	**It is a 14-bit read-only register that holds the number of received data bytes in the packet in RxFIFO.** Note: The value returns changes as FIFO is unloaded and is only valid when RxPktRdy (RxCSR.D0) is set.

A090001A TXTYPE TxType Register 00

Bit	15	14	13	12	11	10	9	8	7	6	5	4	3	2	1	0
Name									TX_SPEED		TX_PROTOCOL		TX_TARGET_EP_NUMBER			
Type									RW		RW		RW			
Reset									0	0	0	0	0	0	0	0

© 2015 - 2017 MediaTek Inc.
This document contains information that is proprietary to MediaTek Inc. ("MediaTek") and/or its licensor(s).
Any unauthorized use, reproduction or disclosure of this document in whole or in part is strictly prohibited.

Bit(s)	Name	Description
7:6	TX_SPEED	**Operating speed of the target device when the core is configured with the multipoint option. When the core is not configured with the multipoint option, these bits should not be accessed** 2'b00: Unused 2'b01: High 2'b10: Full 2'b11: Low
5:4	TX_PROTOCOL	**The CPU should set up this bit to select the required protocol for Tx endpoint:** 2'b00: Illegal 2'b01: Isochronous 2'b10: Bulk 2'b11: Interrupt
3:0	TX_TARGET_EP_NUMBER	**The CPU should set this value to the endpoint number containing in the Tx endpoint descriptor returned to the USB2.0 controller during device enumeration.**

A090001B **TXINTERVAL** **TxInterval Register** **00**

Bit	15	14	13	12	11	10	9	8	7	6	5	4	3	2	1	0
Name									TX_POLLING_INTERVAL_NAK_LIMIT_M							
Type									RW							
Reset									0	0	0	0	0	0	0	0

Bit(s)	Name	Description
7:0	TX_POLLING_INTERVAL_NAK_LIMIT_M	**(Host mode only) TxInterval Register TxInterval is an 8-bit register that, for Interrupt and Isochronous transfers, defines the polling interval for the currently selected Tx endpoint. For Bulk endpoints, this register sets up the number of frames/microframes after which the endpoint should time out on receiving a stream of NAK responses. There is a TxInterval register for each configured Tx endpoint (except for Endpoint 0).** In each case the value that is set defines a number of frames/microframes (high speed transfers), as the following: Transfer Type | Speed | Valid values (m) | Interpretation Interrupt | Low Speed or Full Speed | 1-255 | Polling interval is m frames. Interrupt | High Speed | 1-16 | Polling interval is 2^(m-1) microframes Isochronous | Full Speed or High Speed | 1-16 | Polling interval is 2^(m-1) frames/microframes Bulk | Full Speed or High Speed | 2-16 | NAK Limit is 2^(m-1) frames/microframes. Note: Value 0 or 1 disables the NAK timeout function.

A090001C **RXTYPE** **RxType Register** **00**

Bit	15	14	13	12	11	10	9	8	7	6	5	4	3	2	1	0
Name									RXSPEED		RX_PROTOCOL		RX_TARGET_EP_NUMBER			
Type									RW		RW		RW			
Reset									0	0	0	0	0	0	0	0

© 2015 - 2017 MediaTek Inc.

This document contains information that is proprietary to MediaTek Inc. ("MediaTek") and/or its licensor(s).
Any unauthorized use, reproduction or disclosure of this document in whole or in part is strictly prohibited.

Bit(s)	Name	Description
7:6	RXSPEED	**Operating speed of the target device when the core is configured with the multipoint option. When the core is not configured with the multipoint option, these bits should not be accessed** 2'b00: Unused 2'b01: High 2'b10: Full 2'b11: Low
5:4	RX_PROTOCOL	**The CPU should set this to select the required protocol for the Tx endpoint:** 2'b00: Illegal 2'b01: Isochronous 2'b10: Bulk 2'b11: Interrupt
3:0	RX_TARGET_EP_NUMBER	**The CPU should set this value to the endpoint number containing in the Tx endpoint descriptor returned to the USB2.0 controller during device enumeration.**

A090001D **RXINTERVAL** **RxInterval Register** **00**

Bit	15	14	13	12	11	10	9	8	7	6	5	4	3	2	1	0
Name									RX_POLLING_INTERVAL_NAK_LIMIT_M							
Type									RW							
Reset									0	0	0	0	0	0	0	0

Bit(s)	Name	Description
7:0	RX_POLLING_INTERVAL_NAK_LIMIT_M	**RxInterval Register RxInterval is an 8-bit register that, for Interrupt and Isochronous transfers, defines the polling interval for the currently selected Rx endpoint. For Bulk endpoints, this register sets the number of frames/microframes after which the endpoint should time out on receiving a stream of NAK responses. There is a RxInterval register for each configured Rx endpoint (except for Endpoint 0).** RX POLLING INTERVAL/NAK LIMIT (M), (host mode only) In each case the value that is set defines a number of frames/microframes (high speed transfers), as the following: Transfer type speed valid values (m) interpretation Interrupt low speed or full speed 1 - 255 polling interval is m frames. High speed 1 - 16 polling interval is 2(m-1) microframes Isochronous full speed or high speed 1 - 16 polling interval is 2(m-1) frames/microframes Bulk full speed or high speed 2 - 16 NAK limit is 2(m-1) frames/microframes. Note: Value 0 or 1 disables the NAK timeout function.

A090001F **FIFOSIZE** **Configured FIFO Size Register** **00**

Bit	15	14	13	12	11	10	9	8	7	6	5	4	3	2	1	0
Name									RXFIFOSIZE				TXFIFOSIZE			
Type									DC				DC			
Reset									0	0	0	0	0	0	0	0

Bit(s)	Name	Description
7:4	RXFIFOSIZE	**Indicates RxFIFO size of 2^n bytes** Example: Value 10 means 2^10 = 1024 bytes.
3:0	TXFIFOSIZE	**Indicates TxFIFO size of 2^n bytes** Example: Value 10 means 2^10 = 1024 bytes.

© 2015 - 2017 MediaTek Inc.

This document contains information that is proprietary to MediaTek Inc. ("MediaTek") and/or its licensor(s).
Any unauthorized use, reproduction or disclosure of this document in whole or in part is strictly prohibited.

Bit(s)	Name	Description

A0900020 FIFO0 USB Endpoint 0 FIFO Register 00000000

Bit	31	30	29	28	27	26	25	24	23	22	21	20	19	18	17	16
Name	FIFO_DATA[31:16]															
Type	Other															
Reset	0	0	0	0	0	0	0	0	0	0	0	0	0	0	0	0
Bit	15	14	13	12	11	10	9	8	7	6	5	4	3	2	1	0
Name	FIFO_DATA[15:0]															
Type	Other															
Reset	0	0	0	0	0	0	0	0	0	0	0	0	0	0	0	0

Bit(s)	Name	Description
31:0	FIFO_DATA	**The Endpoint FIFO registers provides 16 addresses for CPU to access FIFOs for each endpoint. Writing to these addresses loads data into TxFIFO for the corresponding endpoint. Reading from these addresses unloads data from RxFIFO for the corresponding endpoint.** Note: 1. Transfers to and from FIFOs may be 8-bit, 16-bit or 32-bit as required, and any combination of access is allowed provided the data accessed are contiguous. However, all the transfers associated with one packet must be of the ame width so that the data are consistently byte-, word- or double-word-aligned. The last transfer may however contain fewer bytes than the previous transfers in order to complete an odd-byte or odd-word transfer. For DC/DTV project, also refer to the RISC_SIZE register to complete FIFO access. 2. Depending on the size of the FIFO and the expected maximum packet size, the FIFOs support either single-packet or double-packet buffering. However, burst writing of multiple packets is not supported as flags need to be set after each packet is written. 3. Following a STALL response or a Tx Strike Out error on Endpoint, the associated FIFO is completely flushed. 4. For programmers, do not use debug tools to monitor or read the FIFO region. The FIFO pointer will increase and cause unexpected error in MAC state machine.

A0900024 FIFO1 USB Endpoint 1 FIFO Register 00000000

Bit	31	30	29	28	27	26	25	24	23	22	21	20	19	18	17	16
Name	FIFO_DATA[31:16]															
Type	Other															
Reset	0	0	0	0	0	0	0	0	0	0	0	0	0	0	0	0
Bit	15	14	13	12	11	10	9	8	7	6	5	4	3	2	1	0
Name	FIFO_DATA[15:0]															
Type	Other															
Reset	0	0	0	0	0	0	0	0	0	0	0	0	0	0	0	0

Bit(s)	Name	Description
31:0	FIFO_DATA	**The Endpoint FIFO registers provides 16 addresses for CPU access to FIFOs for each endpoint. Writing to these addresses loads data into the TxFIFO for the corresponding endpoint. Reading from these addresses unloads data from RxFIFO for the corresponding endpoint.** Note: 1. Transfers to and from FIFOs may be 8-bit, 16-bit or 32-bit as required, and any combination of access is allowed provided the data accessed are contiguous. However, all the transfers associated with one packet must be of the ame width so that the data are consistently byte-, word- or double-word-aligned. The last transfer may however contain fewer bytes than the previous transfers in order to

© 2015 - 2017 MediaTek Inc.

This document contains information that is proprietary to MediaTek Inc. ("MediaTek") and/or its licensor(s).
Any unauthorized use, reproduction or disclosure of this document in whole or in part is strictly prohibited.

Bit(s)	Name	Description
		complete an odd-byte or odd-word transfer. For DC/DTV project, also refer to the RISC_SIZE register to complete FIFO access. 2. Depending on the size of the FIFO and the expected maximum packet size, the FIFOs support either single-packet or double-packet buffering. However, burst writing of multiple packets is not supported as flags need to be set after each packet is written. 3. Following a STALL response or a Tx Strike Out error on Endpoint, the associated FIFO is completely flushed. 4. For programmers, do not use debug tools to monitor or read the FIFO region. The FIFO pointer will increase and cause unexpected error in MAC state machine.

A0900028 **FIFO2** **USB Endpoint 2 FIFO Register** **00000000**

Bit	31	30	29	28	27	26	25	24	23	22	21	20	19	18	17	16
Name	FIFO_DATA[31:16]															
Type	Other															
Reset	0	0	0	0	0	0	0	0	0	0	0	0	0	0	0	0
Bit	15	14	13	12	11	10	9	8	7	6	5	4	3	2	1	0
Name	FIFO_DATA[15:0]															
Type	Other															
Reset	0	0	0	0	0	0	0	0	0	0	0	0	0	0	0	0

Bit(s)	Name	Description
31:0	FIFO_DATA	**The Endpoint FIFO registers provides 16 addresses for CPU access to the FIFOs for each endpoint. Writing to these addresses loads data into TxFIFO for the corresponding endpoint. Reading from these addresses unloads data from RxFIFO for the corresponding endpoint.** Note: 1. Transfers to and from FIFOs may be 8-bit, 16-bit or 32-bit as required, and any combination of access is allowed provided the data accessed are contiguous. However, all the transfers associated with one packet must be of the ame width so that the data are consistently byte-, word- or double-word-aligned. The last transfer may however contain fewer bytes than the previous transfers in order to complete an odd-byte or odd-word transfer. For DC/DTV project, also refer to RISC_SIZE register to complete FIFO access. 2. Depending on the size of the FIFO and the expected maximum packet size, the FIFOs support either single-packet or double-packet buffering. However, burst writing of multiple packets is not supported as flags need to be set after each packet is written. 3. Following a STALL response or a Tx Strike Out error on Endpoint, the associated FIFO is completely flushed. 4. For programmers, do not use debug tools to monitor or read the FIFO region. The FIFO pointer will increase and cause unexpected error in MAC state machine.

A0900060 **DEVCTL** **Device Control Register** **80**

Bit	15	14	13	12	11	10	9	8	7	6	5	4	3	2	1	0
Name									B_DEVICE	FSDEV	LSDEV	VBUS		HOSTMODE	HOSTREQ	SESSION
Type									RU	RU	RU	RU		RU	Other	Other
Reset									1	0	0	0	0	0	0	0

This document contains information that is proprietary to MediaTek Inc. ("MediaTek") and/or its licensor(s).
Any unauthorized use, reproduction or disclosure of this document in whole or in part is strictly prohibited.

Bit(s)	Name	Description
7	B_DEVICE	**This read-only bit indicates whether the USB2.0 controller operates as the 'A' device or the 'B' device. Only valid when a session is in progress.** Note: If the core is in Force_Host mode, this bit will indicate the state of the HOSTDISCON input signal from the PHY. 1'b0: 'A' device 1'b1: 'B' device
6	FSDEV	**This read-only bit is set when a full-speed or high-speed device has been detected being connected to the port. (High-speed devices are distinguished from full-speed by checking for high-speed chirps when the device is reset.) Only valid in host mode.**
5	LSDEV	**This read-only bit is set when a low-speed device has been detected being connected to the port. Only valid in host mode.**
4:3	VBUS	**These read-only bits encode the current VBUS level as the following: (only available with OTG function equipped; else the register value will be undefined.)** 2'b00: Below SessionEnd 2'b01: Above SessionEnd, below AValid 2'b10: Above AValid, below VBusValid 2'b11: About VBusValid
2	HOSTMODE	**This read-only bit is set when the USB2.0 controller is acting as a host.**
1	HOSTREQ	**When set, the USB2.0 controller will initiate Host Negotiation when Suspend mode is entered. Cleared when Host Negotiation is completed ('B' device only).**
0	SESSION	**When operating as 'A' device, this bit is set or cleared by the CPU to start or end a session. When operating as 'B' device, this bit is set/cleared by the USB2.0 controller when a session starts/ends. It is also set by the CPU to initiate the Session Request Protocol. When the USB2.0 controller is in Suspend mode, the bit may be cleared by the CPU to perform software disconnect.** Note: Clearing this bit when the core is not suspended will result in undefined behavior.

A0900061 PWRUPCNT Power Up Counter Register 0F

Bit	15	14	13	12	11	10	9	8	7	6	5	4	3	2	1	0
Name													PWRUPCNT			
Type													RW			
Reset													1	1	1	1

Bit(s)	Name	Description
3:0	PWRUPCNT	**Power up counter limit. The power up counter counts the K state duration during suspend; when it times out, the resume interrupt will be issued. The register should be configured according to AHB clock speed.**

A0900062 TXFIFOSZ Tx FIFO Size Register 00

Bit	15	14	13	12	11	10	9	8	7	6	5	4	3	2	1	0
Name												TXDPB	TXSZ			
Type												RW	RW			
Reset												0	0	0	0	0

© 2015 - 2017 MediaTek Inc.

This document contains information that is proprietary to MediaTek Inc. ("MediaTek") and/or its licensor(s).
Any unauthorized use, reproduction or disclosure of this document in whole or in part is strictly prohibited.

Bit(s)	Name	Description
4	TXDPB	**Defines whether double-packet buffering supported for TxFIFO. When '1', double-packet buffering is supported. When '0', only single-packet buffering is supported.**
3:0	TXSZ	**Maximum packet size to be allowed for (before any splitting within the FIFO of Bulk/High-Bandwidth packets prior to transmission). If TxDPB = 0, FIFO will also be this size; if TxDPB = 1, FIFO will be twice this size.** TxSZ[3:0] Packet size (bytes) 4'b0000: 8 4'b0001: 16 4'b0010: 32 4'b0011: 64 4'b0100: 128 4'b0101: 256 4'b0110: 512 4'b0111: 1024 4'b1000: 2048 (single-packet buffering only) 4'b1001: 4096 (single-packet buffering only) Others: Not supported

A0900063 **RXFIFOSZ** **Rx FIFO Size Register** **00**

Bit	15	14	13	12	11	10	9	8	7	6	5	4	3	2	1	0
Name												RXDPB	RXSZ			
Type												RW	RW			
Reset												0	0	0	0	0

Bit(s)	Name	Description
4	RXDPB	**Defines whether double-packet buffering supported for TxFIFO. When 1, double-packet buffering is supported. When 0, only single-packet buffering is supported.**
3:0	RXSZ	**Maximum packet size to be allowed for (before any splitting within the FIFO of Bulk/High-Bandwidth packets prior to transmission). If TxDPB = 0, FIFO will also be this size; if TxDPB = 1, FIFO will be twice this size** RxSZ[3:0] Packet size (bytes) 4'b0000: 8 4'b0001: 16 4'b0010: 32 4'b0011: 64 4'b0100: 128 4'b0101: 256 4'b0110: 512 4'b0111: 1024 4'b1000: 2048 (single-packet buffering only) 4'b1001: 4096 (single-packet buffering only) Others: Not supported

A0900064 **TXFIFOADD** **Tx FIFO Address Register** **0000**

Bit	15	14	13	12	11	10	9	8	7	6	5	4	3	2	1	0
Name				TXFIFOADD												
Type				RW												
Reset				0	0	0	0	0	0	0	0	0	0	0	0	0

© 2015 - 2017 MediaTek Inc.
This document contains information that is proprietary to MediaTek Inc. ("MediaTek") and/or its licensor(s).
Any unauthorized use, reproduction or disclosure of this document in whole or in part is strictly prohibited.

Bit(s)	Name	Description
12:0	TXFIFOADD	**TxFIFOadd is a 13-bit register which controls the start address of the selected Tx endpoint FIFO.** TxFIFOadd[12:0] Start address 13'h0000: 0000 13'h0001: 0008 13'h0002: 0010 13'h1FFF: FFF8

A090006 6 **RXFIFOADD** **Rx FIFO Address Register** **0000**

Bit	15	14	13	12	11	10	9	8	7	6	5	4	3	2	1	0
Name	DataErrIntrEn	OverRUNIntrEn		RXFIFOADD												
Type	RW	RW		RW												
Reset	0	0		0	0	0	0	0	0	0	0	0	0	0	0	0

Bit(s)	Name	Description
15	DataErrIntrEn	**Enables data error interrupt** Note: This bit is only valid when the endpoint is operating in ISO mode.
14	OverRUNIntrEn	**Enables over run interrupt** Note: this bit is only valid when the endpoint is operating in ISO mode.
12:0	RXFIFOADD	**RxFIFOadd is a 13-bit register which controls the start address of the selected Rx endpoint FIFO.** RxFIFOadd[12:0] Start address 13'h0000: 0000 13'h0001: 0008 13'h0002: 0010 13'h1FFF: FFF8

A090006 C **HWCAPS** **Hardware Capability Register** **2003**

Bit	15	14	13	12	11	10	9	8	7	6	5	4	3	2	1	0
Name	QMU_SUPPORT	HUB_SUPPORT	USB20_SUPPORT	USB11_SUPPORT	MSTR_WRAP_INTFX		SLAVE_WRAP_INTFX				USB_VERSION_CODE					
Type	RO	RO	RO	RO	DC		DC				RO					
Reset	0	0	1	0	0	0	0	0			0	0	0	0	1	1

Bit(s)	Name	Description
15	QMU_SUPPORT	**QMU feature support**
14	HUB_SUPPORT	**HUB feature support**
13	USB20_SUPPORT	**USB2.0 feature support**
12	USB11_SUPPORT	**USB1.1 feature support**
11:10	MSTR_WRAP_INTFX	**Configures AHB master interface** 2'b00: Mentor AHB master interface

© 2015 - 2017 MediaTek Inc.

This document contains information that is proprietary to MediaTek Inc. ("MediaTek") and/or its licensor(s).
Any unauthorized use, reproduction or disclosure of this document in whole or in part is strictly prohibited.

Bit(s)	Name	Description
		2'b01: Asynchronous AHB master interface 2'b10: Asynchronous AXI master interface 2'b11: Asynchronous DX DRAM master interface
9:8	SLAVE_WRAP_INTFX	**Configures AHB slave interface** 2'b00: Mentor AHB slave interface 2'b01: Asynchronous AHB master interface 2'b10: Asynchronous AXI master interface 2'b11: Asynchronous DX CPU slave interface
5:0	USB_VERSION_CODE	**USB hardware version code**

A090006E **HWSVERS** **Version Register** **0000**

Bit	15	14	13	12	11	10	9	8	7	6	5	4	3	2	1	0
Name									USB_SUB_VERSION_CODE							
Type									RO							
Reset									0	0	0	0	0	0	0	0

Bit(s)	Name	Description
7:0	USB_SUB_VERSION_CODE	**USB software version code**

A0900070 **BUSPERF1** **USB Bus Performance Register 1** **0000**

Bit	15	14	13	12	11	10	9	8	7	6	5	4	3	2	1	0
Name	CLRDMAREQEARLY_EN	SOFT_DEBOUNCE	ISO_ERR_CNT_EN	ISO_RTY_DIS		PREAMBLE_DELAY_EN	HOST_WAIT_EP0									
Type	RW	RW	RW	RW		RW	RW									
Reset	0	0	0	0		0	0	0	0	0	0	0	0	0	0	0

Bit(s)	Name	Description
15	CLRDMAREQEARLY_EN	**CLRDMAREQEARLY_EN = 1 means DMAReq is cleared when 8 bytes of data remain in FIFO for RX, or TXMAXP-8 bytes are loaded in FIFO for TX.** CLRDMAREQEARLY_EN = 0 means DMAReq is only cleared when RX FIFO is read empty, or TXMAXP is loaded to TX FIFO.
14	SOFT_DEBOUNCE	**If soft_debounce=0, debounce will be implemented by hardware, that is 120ms, the same as before.** If soft_debounce=1, after DP/DM is stable for 1ms, connection interrupt will be generated, and software will determine how long the delay is for debounce. This bit only affects the debounce behavior when the cable starts connection. It does not affect HNP when the cable is connected.
13	ISO_ERR_CNT_EN	**Musbhdrc has different behavior from the USB spec. in HUB ISO mode. When this bit is set, the Strike out mechanism of re-try failed will be engaged and complete the transaction.**
12	ISO_RTY_DIS	**Musbhdrc has different behavior from the USB spec. in HUB ISO**

This document contains information that is proprietary to MediaTek Inc. ("MediaTek") and/or its licensor(s).
Any unauthorized use, reproduction or disclosure of this document in whole or in part is strictly prohibited.

Bit(s)	Name	Description
		mode. This bit is disable the retry of CSplit @ SOF
10	PREAMBLE_DELAY_EN	**Host mode only and downstream port connect to hub. This bit enables the function of host delay to issue a preamble +ack packet after receiving data from LS device about 3** LS bit time.
9:0	HOST_WAIT_EP0	**Host waiting time of Endpoint 0** The written value defines the minimum cycles for controller to issue the next IN/OUT/PING token during idle state. 0: No wait >0: During idle state, the controller must wait for at least the exact cycles written before it issues the next IN/OUT/PING token. The cycle unit is as USB system clock cycle.

A0900072 BUSPERF2 USB Bus Performance Register 2 C000

Bit	15	14	13	12	11	10	9	8	7	6	5	4	3	2	1	0
Name	HSR_ISOICHK_DIS	HST_ISOOCHK_DIS	HOST_WAIT_EPX													
Type	RW	RW	RW													
Reset	1	1	0	0	0	0	0	0	0	0	0	0	0	0	0	0

Bit(s)	Name	Description
15	HSR_ISOICHK_DIS	**ISO Rx 0-packet Disable in host mode** Optional disable selection for ISO Rx 0 packet
14	HST_ISOOCHK_DIS	**ISO Tx 0-packet Disable in host mode** Optional disable selection for ISO Rx 0 packet
13:0	HOST_WAIT_EPX	**Host waiting time of all endpoints except for Endpoint 0** The written value defines the minimum cycles for controller to issue the next IN/OUT/PING token during idle state. 0: No wait >0: During idle state, the controller must wait for at least the exact cycles written before it issues the next IN/OUT/PING token. The cycle unit is as USB system clock cycle.

A0900074 BUSPERF3 USB Bus Performance Register 3 0A48

Bit	15	14	13	12	11	10	9	8	7	6	5	4	3	2	1	0
Name					VBUSERR_MODE		FLUSH_FIFO_EN		NOISE_STILL_SOF	BAB_CLR_EN			UNDO_SRPFIX	OTG_DEGLITCH_DISABLE	EP_SWRST	DISUSBRESET
Type					RW		RW		RW	RW			RW	RW	A0	RW
Reset					1		1		0	1			1	0	0	0

Bit(s)	Name	Description
11	VBUSERR_MODE	**Controls whether VBUS error will reset USB controller or only set up the VBUS error bit**

This document contains information that is proprietary to MediaTek Inc. ("MediaTek") and/or its licensor(s).
Any unauthorized use, reproduction or disclosure of this document in whole or in part is strictly prohibited.

Bit(s)	Name	Description
		1'b0: Set up INTRUSB.bit[7] VBUS error only 1'b1: Reset USB controller and set up INTRUSB.bit[7] VBUS error tooDataErr interrupt enable. The DataErr status bit is in RxCSR[3] and should be written 0 to clear.TBD
9	FLUSH_FIFO_EN	**Enables Flush FIFO** 1'b1: Clear USBPtr0, USBPtr1 of EPx Tx by flush FIFO command. 1'b0: USBPtr0, USBPtr1 of EPx Tx cannot be cleared by flush FIFO command.
7	NOISE_STILL_SOF	**Forces transmitting SOF as babble interrupt**
6	BAB_CLR_EN	**Controls babble session** 1'b0: Babble interrupt will not close session automatically. 1'b1: Babble interrupt will close session automatically.
3	UNDO_SRPFIX	**The CPU sets up this bit to recover to the original circuit of USB2.0 IP about SRP.**
2	OTG_DEGLITCH_DISABLE	**Set to 1 to disable deglitch circuit of OTG signal group VBUSVALID, AVALID and SESSEND.**
1	EP_SWRST	**SW can reset the USB MAC setting by setting this bit to 1. EP_SWRST will be cleared by HW automatically.** The MAC settings include function address, endpoint interrupt enable/status, endpoint state and EP TX/RX CSR.
0	DISUSBRESET	**If DISUSBRESET is 0, USB MAC setting will be reset to inconfigured condition when USB bus reset is detected. SW can set this bit to 1 to disable USB MAC setting. Reset by HW when USB bus reset is detected.** The HW reset MAC settings include: 1. Clear function address register 2. Clear index register 3. Flush all endpoint FIFOs 4. Clear control/status register a. EPN TX/RXMAXP b. EPN TX/RXCSR c. EPN TX/RXTYPE d. EPN TX/RXInterval e. EPN RXCOUNT f. EP0 CSR0 g. EP0 COUNT0 5. Enable TX/RX endpoint interrupt and clear TX/RX interrupt status Note: EPN TX/RX FIFOSZ/AD are not cleared.

A0900078 **EPINFO** **Number of Tx and Rx Register** **24**

Bit	15	14	13	12	11	10	9	8	7	6	5	4	3	2	1	0
Name									RXENDPOINTS				TXENDPOINTS			
Type									RO				RO			
Reset									0	0	1	0	0	1	0	0

Bit(s)	Name	Description
7:4	RXENDPOINTS	**Number of Rx endpoints implemented in the design.**
3:0	TXENDPOINTS	**Number of Tx endpoints implemented in the design.**

A0900079 **RAMINFO** **Width of RAM and Number of DMA Channel Register** **4A**

Bit	15	14	13	12	11	10	9	8	7	6	5	4	3	2	1	0
Name									DMACHANS				RAMBITS			
Type									RO				DC			
Reset									0	1	0	0	1	0	1	0

© 2015 - 2017 MediaTek Inc.

This document contains information that is proprietary to MediaTek Inc. ("MediaTek") and/or its licensor(s).
Any unauthorized use, reproduction or disclosure of this document in whole or in part is strictly prohibited.

Bit(s)	Name	Description
7:4	DMACHANS	**Number of DMA channels implemented in the design.**
3:0	RAMBITS	**Width of the RAM address bus-1**

A090007A **LINKINFO** **Delay to be Applied Register** **5C**

Bit	15	14	13	12	11	10	9	8	7	6	5	4	3	2	1	0
Name									WTCON				WTID			
Type									RW				RW			
Reset									0	1	0	1	1	1	0	0

Bit(s)	Name	Description
7:4	WTCON	**Sets the wait to be applied to allow for the user's connect/disconnect filter in units of 533.3ns. (The default setting corresponds to 2.667us.) The default value will change to be 4'h8 to meet 2.667us.**
3:0	WTID	**Sets up delay to be applied from IDPULLUP being asserted to IDDIG being considered valid in units of 4.369ms.** The default setting corresponds to 52.43ms.)

A090007B **VPLEN** **Vbus Pulsing Charge Register** **3C**

Bit	15	14	13	12	11	10	9	8	7	6	5	4	3	2	1	0
Name									VPLEN							
Type									RW							
Reset									0	0	1	1	1	1	0	0

Bit(s)	Name	Description
7:0	VPLEN	**Sets up duration of the VBus pulsing charge in units of 136.5 us. (The default setting corresponds to 8.19ms**

A090007C **HS_EOF1** **Time Buffer Available on HS Transaction Register** **80**

Bit	15	14	13	12	11	10	9	8	7	6	5	4	3	2	1	0
Name									HS_EOF1							
Type									RW							
Reset									1	0	0	0	0	0	0	0

Bit(s)	Name	Description
7:0	HS_EOF1	**Sets up high-speed transactions the time before EOF to stop beginning new transactions, in units of 133.3ns.** The default setting corresponds to 17.07us. USB2.0 IP only.

A090007D **FS_EOF1** **Time Buffer Available on FS Transaction Register** **77**

Bit	15	14	13	12	11	10	9	8	7	6	5	4	3	2	1	0
Name									FS_EOF1							
Type									RW							
Reset									0	1	1	1	0	1	1	1

© 2015 - 2017 MediaTek Inc.

This document contains information that is proprietary to MediaTek Inc. ("MediaTek") and/or its licensor(s).
Any unauthorized use, reproduction or disclosure of this document in whole or in part is strictly prohibited.

Bit(s)	Name	Description
7:0	FS_EOF1	**Sets up full-speed transactions the time before EOF to stop beginning new transactions, in units of 533.3ns. (The default setting corresponds to 63.46us.) The default value will change to be 8'hBE to meet 63.46us.**

A090007E **LS_EOF1** **Time Buffer Available on LS Transaction Register** **72**

Bit	15	14	13	12	11	10	9	8	7	6	5	4	3	2	1	0
Name									LS_EOF1							
Type									RW							
Reset									0	1	1	1	0	0	1	0

Bit(s)	Name	Description
7:0	LS_EOF1	**Sets up Q252low-speed transactions the time before EOF to stop beginning new transactions, in units of 1.067us. (The default setting corresponds to 121.6us.). USB2.0 IP only. The default value will change to be 8'hB6 to meet 121.6us.**

A090007F **RST_INFO** **Reset Information Register** **00**

Bit	15	14	13	12	11	10	9	8	7	6	5	4	3	2	1	0
Name									WTFSSE0				WTCHRP			
Type									RW				RW			
Reset									0	0	0	0	0	0	0	0

Bit(s)	Name	Description
7:4	WTFSSE0	**Signifies the SE0 signal duration before issuing the reset signal (for device only).** Duration = 272.8 x WTFSSE0 + 2.5 usec. This register will only be reset when hardware is reset.
3:0	WTCHRP	**Sets up delay to be applied from detecting Reset to sending chirp K (for device only).** The duration = 272.8 x WTCHRP + 0.1 usec. This register will only be reset when hardware is reset.

A0900080 **RXTOG** **Rx Data Toggle Set/Status Register** **0000**

Bit	15	14	13	12	11	10	9	8	7	6	5	4	3	2	1	0
Name														EP2RXTOG	EP1RXTOG	
Type														Other	Other	
Reset														0	0	

Bit(s)	Name	Description
2	EP2RXTOG	**Receive Logical Endpoint n Data Toggle Bit Set/Status** When read, these bits indicate the current state of the Endpoint n data toggle. If enable bit is high, the bit may be written with the required setting of the data toggle. If enable is low, any value written will be ignored

© 2015 - 2017 MediaTek Inc.

This document contains information that is proprietary to MediaTek Inc. ("MediaTek") and/or its licensor(s).
Any unauthorized use, reproduction or disclosure of this document in whole or in part is strictly prohibited.

Bit(s)	Name	Description
1	EP1RXTOG	Note: This register is word access. 1'b0: Logical Endpoint n RX data toggle bit = 0 1'b1: Logical Endpoint n RX data toggle bit = 1 **Receive Logical Endpoint n Data Toggle Bit Set/Status.** When read, these bits indicate the current state of the Endpoint n data toggle. If enable bit is high, the bit may be written with the required setting of the data toggle. If enable is low, any value written will be ignored Note: This register is word access. 1'b0: Logical Endpoint n RX data toggle bit = 0 1'b1: Logical Endpoint n RX data toggle bit = 1

A0900082 **RXTOGEN** **Rx Data Toggle Enable Register** **0000**

Bit	15	14	13	12	11	10	9	8	7	6	5	4	3	2	1	0
Name														EP2RXTOGEN	EP1RXTOGEN	
Type														RW	RW	
Reset														0	0	

Bit(s)	Name	Description
2	EP2RXTOGEN	**Enables Receive Logical Endpoint n Data Toggle Bit** If enable bit is set, the endpoint n data toggle can be set. Note: This register is word access. 1'b0: Forbid RISC writing EP n data toggle status with EP1RXTOG 1'b1: Allow RISC writing EP n data toggle status with EP1RXTOG
1	EP1RXTOGEN	**Enables Receive Logical Endpoint n Data Toggle Bit** If enable bit is set, the endpoint n data toggle can be set. Note: This register is word access. 1'b0: Forbid RISC writing EP n data toggle status with EP1RXTOG 1'b1: Allow RISC writing EP n data toggle status with EP1RXTOG

A0900084 **TXTOG** **Tx Data Toggle Set/Status Register** **0000**

Bit	15	14	13	12	11	10	9	8	7	6	5	4	3	2	1	0
Name												EP4TXTOG	EP3TXTOG	EP2TXTOG	EP1TXTOG	
Type												Other	Other	Other	Other	
Reset												0	0	0	0	

Bit(s)	Name	Description
4	EP4TXTOG	**Transmit Logical Endpoint n Data Toggle Bit Set/Status** When read, these bits indicate the current state of the Endpoint n data toggle. If enable bit is high, the bit may be written with the required setting of the data toggle. If enable is low, any value written will be ignored Note: This register is word access. 1'b0: Logical Endpoint n TX data toggle bit = 0 1'b1: Logical Endpoint n TX data toggle bit = 1
3	EP3TXTOG	**Transmit Logical Endpoint n Data Toggle Bit Set/Status** When read, these bits indicate the current state of the Endpoint n data toggle. If enable bit is high, the bit may be written with the required setting of the data

© 2015 - 2017 MediaTek Inc.

This document contains information that is proprietary to MediaTek Inc. ("MediaTek") and/or its licensor(s).
Any unauthorized use, reproduction or disclosure of this document in whole or in part is strictly prohibited.

Bit(s)	Name	Description
		toggle. If enable is low, any value written will be ignored Note: This register is word access. 1'b0: Logical Endpoint n TX data toggle bit = 0 1'b1: Logical Endpoint n TX data toggle bit = 1
2	EP2TXTOG	**Transmit Logical Endpoint n Data Toggle Bit Set/Status** When read, these bits indicate the current state of the Endpoint n data toggle. If enable bit is high, the bit may be written with the required setting of the data toggle. If enable is low, any value written will be ignored Note: This register is word access. 1'b0: Logical Endpoint n TX data toggle bit = 0 1'b1: Logical Endpoint n TX data toggle bit = 1
1	EP1TXTOG	**Transmit Logical Endpoint n Data Toggle Bit Set/Status** When read, these bits indicate the current state of the Endpoint n data toggle. If enable bit is high, the bit may be written with the required setting of the data toggle. If enable is low, any value written will be ignored Note: This register is word access. 1'b0: Logical Endpoint n TX data toggle bit = 0 1'b1: Logical Endpoint n TX data toggle bit = 1

A0900086 **TXTOGEN** **Tx Data Toggle Enable Register** **0000**

Bit	15	14	13	12	11	10	9	8	7	6	5	4	3	2	1	0
Name												EP4TXTOGEN	EP3TXTOGEN	EP2TXTOGEN	EP1TXTOGEN	
Type												RW	RW	RW	RW	
Reset												0	0	0	0	

Bit(s)	Name	Description
4	EP4TXTOGEN	**Enables Receive Logical Endpoint 1 Data Toggle Bit** If enable bit is set, the endpoint n data toggle can be set. Note: This register is word access. 1'b0: Forbid RISC writing EP n data toggle status with EP1RXTOG 1'b1: Allow RISC writing EP n data toggle status with EP1RXTOG
3	EP3TXTOGEN	**Enables Receive Logical Endpoint 1 Data Toggle Bit** If enable bit is set, the endpoint n data toggle can be set. Note: This register is word access. 1'b0: Forbid RISC writing EP n data toggle status with EP1RXTOG 1'b1: Allow RISC writing EP n data toggle status with EP1RXTOG
2	EP2TXTOGEN	**Enables Receive Logical Endpoint 1 Data Toggle Bit** If enable bit is set, the endpoint n data toggle can be set. Note: This register is word access. 1'b0: Forbid RISC writing EP n data toggle status with EP1RXTOG 1'b1: Allow RISC writing EP n data toggle status with EP1RXTOG
1	EP1TXTOGEN	**Enables Receive Logical Endpoint 1 Data Toggle Bit** If enable bit is set, the endpoint n data toggle can be set. Note: This register is word access. 1'b0: Forbid RISC writing EP n data toggle status with EP1RXTOG 1'b1: Allow RISC writing EP n data toggle status with EP1RXTOG

© 2015 - 2017 MediaTek Inc.

This document contains information that is proprietary to MediaTek Inc. ("MediaTek") and/or its licensor(s).
Any unauthorized use, reproduction or disclosure of this document in whole or in part is strictly prohibited.

A09000A0 **USB_L1INTS** **USB Level 1 Interrupt Status Register** **00000000**

Bit	31	30	29	28	27	26	25	24	23	22	21	20	19	18	17	16
Name																
Type																
Reset																
Bit	15	14	13	12	11	10	9	8	7	6	5	4	3	2	1	0
Name					POWERDWN_INT_STATUS	DRVVBUS_INT_STATUS	IDDIG_INT_STATUS	VBUSVALID_INT_STATUS	DPDM_INT_STATUS	QHIF_INT_STATUS	QINT_STATUS	PSR_INT_STATUS	DMA_INT_STATUS	USBCOM_INT_STATUS	RX_INT_STATUS	TX_INT_STATUS
Type					RU	RU	RU	RU	RU	RU	RU	RU	RU	RU	RU	RU
Reset					0	0	0	0	0	0	0	0	0	0	0	0

Bit(s)	Name	Description
11	POWERDWN_INT_STATUS	**Power-down interrupt status** When controller is in host suspend mode, VBus is valid, and DP is asserted, this bit will set. When controller is in peripheral mode, Avalid is setting, and DP is asserted, this bit will set. When controller is in idle state, avalid is de-asserted , and linestate is in SE0, this bit will also set.
10	DRVVBUS_INT_STATUS	**DRVVBUS interrupt status** This bit shows the interrupt trigger status of DRVVBUS. The trigger polarity is determined by DRVVBUS_INT_POL. This interrupt is used in USB OTG charge pump control.
9	IDDIG_INT_STATUS	**IDDIG interrupt status** This bit shows the interrupt trigger status of IDDIG. The trigger polarity is determined by IDDIG_INT_POL. This interrupt is used in USB OTG attachment.
8	VBUSVALID_INT_STATUS	**VBUSVALID interrupt status** This bit shows the interrupt trigger status of VBUSVALID. The trigger polarity is determined by VBUSVALID_INT_POL. This interrupt is used in USB attachment to host.
7	DPDM_INT_STATUS	**DPDM interrupt status** This bit shows the interrupt trigger status of DPDM. The trigger condition is whether DP or DM goes high. This interrupt is used in USB HOST mode to detect device attachment.
6	QHIF_INT_STATUS	**USBQ HIF command interrupt status** Only valid when WiMAX Q is available.
5	QINT_STATUS	**USBQ interrupt status** Only valid when USBQ is available.
4	PSR_INT_STATUS	**Packet sequence recorder interrupt status**
3	DMA_INT_STATUS	**DMA interrupt status**
2	USBCOM_INT_STATUS	**USB common interrupt status**
1	RX_INT_STATUS	**Endpoint Rx interrupt status**
0	TX_INT_STATUS	**Endpoint Tx interrupt status**

© 2015 - 2017 MediaTek Inc.

This document contains information that is proprietary to MediaTek Inc. ("MediaTek") and/or its licensor(s).
Any unauthorized use, reproduction or disclosure of this document in whole or in part is strictly prohibited.

A09000A4 **USB_L1INTM** **USB Level 1 Interrupt Mask Register** **00000000**

Bit	31	30	29	28	27	26	25	24	23	22	21	20	19	18	17	16
Name																
Type																
Reset																
Bit	15	14	13	12	11	10	9	8	7	6	5	4	3	2	1	0
Name					POWERDWN_INT_UNMASK	DRVVBUS_INT_UNMASK	IDDIG_INT_UNMASK	VBUSVALID_INT_UNMASK	DPDM_INT_UNMASK	QHIF_INT_UNMASK	QINT_UNMASK	PSR_INT_UNMASK	DMA_INT_UNMASK	USBCOM_INT_UNMASK	RX_INT_UNMASK	TX_INT_UNMASK
Type					RW	RW	RW	RW	RW	RW	RW	RW	RW	RW	RW	RW
Reset					0	0	0	0	0	0	0	0	0	0	0	0

Bit(s)	Name	Description
11	POWERDWN_INT_UNMASK	**Unmasks POWERDWN interrupt** 1'b0: Mask interrupt 1'b1: Unmask interrupt
10	DRVVBUS_INT_UNMASK	**Unmasks DRVVBUS interrupt** 1'b0: Mask interrupt 1'b1: Unmask interrupt
9	IDDIG_INT_UNMASK	**Unmasks IDDIG Interrupt** 1'b0: Mask interrupt 1'b1: Unmask interrupt
8	VBUSVALID_INT_UNMASK	**Unmasks VBUSVALID Interrupt** 1'b0: Mask interrupt 1'b1: Unmask interrupt
7	DPDM_INT_UNMASK	**Unmasks DPDM Interrupt** 1'b0: Mask interrupt 1'b1: Unmask interrupt
6	QHIF_INT_UNMASK	**Unmasks USBQ HIF command interrupt** Only valid when WiMAX Q is available. 1'b0: Mask interrupt 1'b1: Unmask interrupt
5	QINT_UNMASK	**Unmasks USBQ Interrupt** Only valid when USBQ is available. . 1'b0: Mask interrupt 1'b1: Unmask interrupt
4	PSR_INT_UNMASK	**Unmasks packet sequence recorder interrupt** 1'b0: Mask interrupt 1'b1: Unmask interrupt
3	DMA_INT_UNMASK	**Unmasks DMA interrupt** 1'b0: Mask interrupt 1'b1: Unmask interrupt
2	USBCOM_INT_UNMASK	**Unmasks USB common interrupt** 1'b0: Mask interrupt 1'b1: Unmask interrupt
1	RX_INT_UNMASK	**Unmasks endpoint Rx interrupt** 1'b0: Mask interrupt 1'b1: Unmask interrupt
0	TX_INT_UNMASK	**Unmasks endpoint Tx Interrupt** 1'b0: Mask interrupt

© 2015 - 2017 MediaTek Inc.

This document contains information that is proprietary to MediaTek Inc. ("MediaTek") and/or its licensor(s).
Any unauthorized use, reproduction or disclosure of this document in whole or in part is strictly prohibited.

Bit(s)	Name	Description
		1'b1: Unmask interrupt

A09000A8 **USB_L1INTP** **USB Level 1 Interrupt Polarity Register** **00000200**

Bit	31	30	29	28	27	26	25	24	23	22	21	20	19	18	17	16
Name																
Type																
Reset																
Bit	15	14	13	12	11	10	9	8	7	6	5	4	3	2	1	0
Name					POWERDWN_INT_POL	DRVVBUS_INT_POL	IDDIG_INT_POL	VBUSVALID_INT_POL								
Type					RW	RW	RW	RW								
Reset					0	0	1	0								

Bit(s)	Name	Description
11	POWERDWN_INT_POL	**POWERDWN interrupt polarity** 1'b0: Interrupt trigger when POWERDWN is 1. 1'b1: Interrupt trigger when POWERDWN is 0.
10	DRVVBUS_INT_POL	**DRVVBUS interrupt polarity** 1'b0: Interrupt trigger when DRVVBUS is 1. 1'b1: Interrupt trigger when DRVVBUS is 0.
9	IDDIG_INT_POL	**IDDIG interrupt polarity** 1'b0: Interrupt trigger when IDDIG is 1. 1'b1: Interrupt trigger when IDDIG is 0.
8	VBUSVALID_INT_POL	**VBUSVALID interrupt polarity** 1'b0: Interrupt trigger when VBUSVALID is 1. 1'b1: Interrupt trigger when VBUSVALID is 0.

A09000AC **USB_L1INTC** **USB Level 1 Interrupt Control Register** **00000000**

Bit	31	30	29	28	27	26	25	24	23	22	21	20	19	18	17	16
Name																
Type																
Reset																
Bit	15	14	13	12	11	10	9	8	7	6	5	4	3	2	1	0
Name																USB_INT_SYNC
Type																RW
Reset																0

Bit(s)	Name	Description
0	USB_INT_SYNC	**USB interrupt synchronization** 1'b0: USB output interrupt is output directly. 1'b1: USB output interrupt is synchronized by MCU BUS clock registers.

© 2015 - 2017 MediaTek Inc.

This document contains information that is proprietary to MediaTek Inc. ("MediaTek") and/or its licensor(s).
Any unauthorized use, reproduction or disclosure of this document in whole or in part is strictly prohibited.

A0900102 CSR0_PERI EP0 Control Status Register 0000

Bit	15	14	13	12	11	10	9	8	7	6	5	4	3	2	1	0
Name								FLUSHFIFO	SERVICESETUPEDN	SERVICEDRXPKTRDY	SENDSTALL	SETUPEND	DATAEND	SENTSTALL	TXPKTRDY	RXPKTRDY
Type								A0	A0	A0	A0	RU	A0	RW	A0	RU
Reset								0	0	0	0	0	0	0	0	0

Bit(s)	Name	Description
8	FLUSHFIFO	**The CPU writes 1 to this bit to flush the next packet to be transmitted/read from the Endpoint 0 FIFO. It is cleared automatically. The FIFO pointer is reset and the TxPktRdy/RxPktRdy bit (below) is cleared. May be set simultaneously with TxPktRdy to abort the packet that is currently loaded into FIFO.** Note: FlushFIFO should only be used when TxPktRdy/RxPktRdy is set. In other cases, it may cause data corruption.
7	SERVICESETUPEDN	**The CPU writes 1 to this bit to clear the SetupEnd bit.** It is cleared automatically.
6	SERVICEDRXPKTRDY	**The CPU writes 1 to this bit to clear the RxPktRdy bit.** It is cleared automatically.
5	SENDSTALL	**The CPU writes 1 to this bit to terminate the current transaction. The STALL handshake will be transmitted, and this bit will be cleared automatically.** Note: The FIFO should be flushed before SendStall is set.
4	SETUPEND	**This bit will be set when a control transaction ends before the DataEnd bit is set. An interrupt will be generated and the FIFO flushed at this time. The bit is cleared by the CPU writing 1 to the ServicedSetupEnd bit.**
3	DATAEND	**The CPU sets up this bit when setting TxPktRdy for the last data packet, when clearing RxPktRdy after unloading the last data packet, and when setting up TxPktRdy for a 0 length data packet. It is cleared automatically.**
2	SENTSTALL	**This bit is set when a STALL handshake is transmitted. The CPU should clear this bit.** Write 0 to clear it.
1	TXPKTRDY	**The CPU sets up this bit after loading a data packet into the FIFO. It is cleared automatically when a data packet has been transmitted. An interrupt is also generated at this point (if enabled)**
0	RXPKTRDY	**This bit is set when a data packet has been received. An interrupt is generated when this bit is set. The CPU clears this bit by setting up the ServicedRxPktRdy bit.**

A0900108 COUNT0 EP0 Received Bytes Register 0000

Bit	15	14	13	12	11	10	9	8	7	6	5	4	3	2	1	0
Name										EP0_RX_COUNT						
Type										RU						
Reset										0	0	0	0	0	0	0

Bit(s)	Name	Description
6:0	EP0_RX_COUNT	**Count0 is a 7-bit read-only register that indicates the number of**

This document contains information that is proprietary to MediaTek Inc. ("MediaTek") and/or its licensor(s).
Any unauthorized use, reproduction or disclosure of this document in whole or in part is strictly prohibited.

Bit(s)	Name	Description
		received data bytes in the Endpoint 0 FIFO. The value returned changes as the contents of the FIFO change and is only valid when RxPktRdy (IDXEPR0.CSR0.bit0) is set.

A090010A **Type0** **EP0 Type Register** **00**

Bit	15	14	13	12	11	10	9	8	7	6	5	4	3	2	1	0
Name									EP0_Type							
Type									RW							
Reset									0	0						

Bit(s)	Name	Description
7:6	EP0_Type	**Operating speed of the target device when the core is configured with the multipoint option. When the core is not configured with the multipoint option, these bits should not be accessed** 2'b00: Unused 2'b01: High 2'b10: Full 2'b11: Low

A090010B **NAKLIMT0** **NAK Limit Register** **00**

Bit	15	14	13	12	11	10	9	8	7	6	5	4	3	2	1	0
Name												NAKLIMIT0				
Type												RW				
Reset												0	0	0	0	0

Bit(s)	Name	Description
4:0	NAKLIMIT0	**(Host mode only) NAKLimit0 is a 5-bit register that sets up the number of frames/microframes (high-speed transfers) after which Endpoint 0 should time out on receiving a stream of NAK responses. (Equivalent settings for other endpoints can be made through their TxInterval and RxInterval registers.). The number of frames/microframes selected is 2(m-1) (where m is the value set in the register, valid values 2 - 16). If the host receives NAK responses from the target for more frames than the number represented by the limit set in this register, the endpoint will be halted.** Note: Value 0 or 1 disables the NAK timeout function.

A090010C **SRAMCONFIGSIZE** **SRAM Size Register** **0800**

Bit	15	14	13	12	11	10	9	8	7	6	5	4	3	2	1	0
Name	SRAM_SIZE															
Type	RO															
Reset	0	0	0	0	1	0	0	0	0	0	0	0	0	0	0	0

Bit(s)	Name	Description
15:0	SRAM_SIZE	**Depth of SRAM with data bus width 32 bits.** **For example, if SRAM is configured to 8KB, SRAM_SIZE will be 16'h800.**

© 2015 - 2017 MediaTek Inc.

This document contains information that is proprietary to MediaTek Inc. ("MediaTek") and/or its licensor(s).
Any unauthorized use, reproduction or disclosure of this document in whole or in part is strictly prohibited.

A090010E **HBCONFIGDATA** **High Bind-width Configuration Register** **00**

Bit	15	14	13	12	11	10	9	8	7	6	5	4	3	2	1	0
Name									NUM_HB_EPR				NUM_HB_EPT			
Type									RO				RO			
Reset									0	0	0	0	0	0	0	0

Bit(s)	Name	Description
7:4	NUM_HB_EPR	**Number of high bind-width RX endpoints**
3:0	NUM_HB_EPT	**Number of high bind-width TX endpoints**

A090010F **CONFIGDATA** **Core Configuration Register** **1F**

Bit	15	14	13	12	11	10	9	8	7	6	5	4	3	2	1	0
Name									MPRXE	MPTXE	BIGENDIAN	HBRXE	HBTXE	DYNFIFOSIZING	SOFTCONE	UTMIDATAWIDTH
Type									RO	RO	RO	RO	RO	RO	RO	RO
Reset									0	0	0	1	1	1	1	1

Bit(s)	Name	Description
7	MPRXE	**When set to 1, automatic amalgamation of bulk packets will be selected.**
6	MPTXE	**When set to 1, automatic splitting of bulk packets will be selected.**
5	BIGENDIAN	**Set to 1 indicates big-endian ordering is selected.**
4	HBRXE	**Set to 1 indicates high-bandwidth Rx ISO Endpoint Support is selected.**
3	HBTXE	**Set to 1 indicates high-bandwidth Tx ISO Endpoint Support is selected.**
2	DYNFIFOSIZING	**Set to 1 indicates Dynamic FIFO Sizing option is selected.**
1	SOFTCONE	**Set to 1 indicates Soft Connect/Disconnect option is selected.**
0	UTMIDATAWIDTH	**Indicates selected UTMI+ data width** 1'b0: 8 bits 1'b1: 16 bits

A0900110 **TX1MAP** **TX1MAP Register** **0000**

Bit	15	14	13	12	11	10	9	8	7	6	5	4	3	2	1	0
Name				M1		MAXIMUM_PAYLOAD_TRANSACTION										
Type				RW		RW										
Reset				0	0	0	0	0	0	0	0	0	0	0	0	0

Bit(s)	Name	Description
12:11	M1	**Maximum payload size for indexed TX endpoint, M1 packet multiplier m maximum payload transaction register**
10:0	MAXIMUM_PAYLOAD_TRANSACTION	**The TxMaxP register defines the maximum amount of data that can be transferred through the selected Tx endpoint in a single operation. There is a TxMaxP register for each Tx endpoint (except for Endpoint 0). Bits 10~0 define (in bytes) the maximum payload transmitted in a**

© 2015 - 2017 MediaTek Inc.

This document contains information that is proprietary to MediaTek Inc. ("MediaTek") and/or its licensor(s).
Any unauthorized use, reproduction or disclosure of this document in whole or in part is strictly prohibited.

Bit(s)	Name	Description
		single transaction. The value set can be up to 1024 bytes but is subject to the constraints placed by the USB Specification on packet sizes for Bulk, Interrupt and Isochronous transfers in full-speed and high-speed operations. Where the option of high-bandwidth isochronous endpoints or of packet splitting on bulk endpoints has been taken when the core is configured, the register will include either 2 or 5 further bits that define a multiplier m which is equal to one more than the value recorded. In the case of bulk endpoints with the packet splitting option enabled, the multiplier m can be up to 32 and defines the maximum number of 'USB' packets (i.e. packets for transmission over the USB) of the specified payload into which a single data packet placed in the FIFO should be split, prior to the transfer. (If the packet splitting option is not enabled, bit15-13 will not be implemented and bit12-11 (if included) will be ignored.) Note: The data packet should be an exact multiple of the payload specified by bit10~0, which is itself required to be one of 8, 16, 32, 64 or (in the case of high speed transfers) 512 bytes. For isochronous endpoints operating in high-speed mode and with the High-bandwidth option enabled, m may only be either 2 or 3 (corresponding to bit11 set or bit12 set respectively) and it specifies the maximum number of such transactions that can take place in a single microframe. If either bit11 or bit12 is not 0, the USB2.0 controller will automatically split any data packet written to FIFO into up to 2 or 3 'USB' packets, each containing the specified payload (or less). The maximum payload for each transaction is 1024 bytes, so this allows up to 3072 bytes to be transmitted in each microframe. (For Isochronous/Interrupt transfers in full-speed mode, bit11 and 12 are ignored.) The value written to bit10~0 (multiplied by m in the case of high-bandwidth Isochronous transfers) should match the value given in the wMaxPacketSize field of the Standard Endpoint Descriptor for the associated endpoint (see USB Specification Revision 2.0, Chapter 9). A mismatch can cause unexpected results. The total amount of data represented by the value written to this register (specified payload * m) must not exceed the FIFO size for the Tx endpoint and should not exceed half the FIFO size if double-buffering is required. If this register is changed after packets have been sent from the endpoint, the Tx endpoint FIFO should be completely flushed (using the FlushFIFO bit in TxCSR) after writing the new value to this register.

A0900112 **TX1CSR_PERI** **Tx1 CSR Register** **0000**

Bit	15	14	13	12	11	10	9	8	7	6	5	4	3	2	1	0
Name	**AUTOSET**	**ISO**		**DMAREQEN**	**FRCDATATOG**	**DMAREQMODE**		**SETTXPKTRDY_TWICE**	**INCOMPTX**	**CLRDATATOG**	**SENTSTALL**	**SENDSTALL**	**FLUSHFIFO**	**UNDERRUN**	**FIFONOTEMPTY**	**TXPKTRDY**
Type	RW	RW		RW	RW	RW		A1	A1	A0	A1	RW	A0	A1	RU	A0
Reset	0	0		0	0	0		0	0	0	0	0	0	0	0	0

Bit(s)	Name	Description
15	AUTOSET	**If The CPU sets up this bit, TxPktRdy will be automatically set when data of the maximum packet size (value in TxMaxP) is loaded into the TxFIFO. If a packet of less than the maximum packet size is loaded, TxPktRdy will have to be set manually.**
14	ISO	**The CPU sets up this bit to enable the Tx endpoint for Isochronous transfers and clears it to enable the Tx endpoint for Bulk or Interrupt transfers.** **Note: This bit only takes effect in peripheral mode. In host mode, it always returns to 0.**

This document contains information that is proprietary to MediaTek Inc. ("MediaTek") and/or its licensor(s).
Any unauthorized use, reproduction or disclosure of this document in whole or in part is strictly prohibited.

Bit(s)	Name	Description
12	DMAREQEN	**The CPU sets up this bit to enable the DMA request for the Tx endpoint.**
11	FRCDATATOG	**The CPU sets up this bit to force the endpoint data toggle to switch and the data packet to be cleared from the FIFO, regardless of whether an ACK was received. This can be used by Interrupt Tx endpoints that are used to communicate rate feedback for Isochronous endpoints.**
10	DMAREQMODE	**The CPU sets up this bit to select DMA Request Mode 1 and clears it to select DMA Request Mode 0.** **Note: This bit should not be cleared either before or in the same cycle as the DMAReqEn bit is cleared.**
8	SETTXPKTRDY_TWICE	**Indicates TxPktRdy had been set when it is 1'b1 already. Write 0 to clear it.**
7	INCOMPTX	**When the endpoint is used for high-bandwidth Isochronous/Interrupt transfers, this bit is set to indicate where a large packet has been split into 2 or 3 packets for transmission but insufficient IN tokens have been received to send all the parts.** **Note: In anything other than a high-bandwidth transfer, this bit will always return to 0.** Write 0 to clear it.
6	CLRDATATOG	**The CPU writes 1 to this bit to reset the endpoint data toggle to 0.**
5	SENTSTALL	**This bit is set when a STALL handshake is transmitted. The FIFO will be flushed and Tx interrupt generated if enabled and the TxPktRdy bit is cleared. The CPU should clear this bit.** Write 0 to clear it.
4	SENDSTALL	**The CPU writes 1 to this bit to issue a STALL handshake to an IN token. The CPU clears this bit to terminate the stall condition.** **Note: This bit has no effect where the endpoint is used for Isochronous transfer. Otherwise, CPU should wait for SENTSTALL interrupt to be generated before clearing the SENDSTALL bit.**
3	FLUSHFIFO	**The CPU writes 1 to this bit to flush the latest packet from the endpoint TxFIFO. The FIFO pointer is reset, the TxPktRdy bit is cleared and an interrupt is generated. May be set simultaneously with TxPktRdy to abort the packet currently loaded into FIFO.** Note: FlushFIFO should only be used when TxPktRdy is set. In other cases, it may cause data corruption. If the FIFO is double-buffered, FlushFIFO may need to be set twice to completely clear the FIFO.
2	UNDERRUN	**The USB will set up this bit if an IN token is received when the TxPktRdy bit is not set. The CPU should clear this bit (write 0 to clear it).**
1	FIFONOTEMPTY	**The USB sets up this bit when there is at least 1 packet in TxFIFO. This bit will be asserted automatically when TXPKTRDY is set by CPU and de-asserted when CPU flushes FIFO or sends a STALL packet.**
0	TXPKTRDY	**The CPU sets up this bit after loading a data packet into FIFO. It is cleared automatically when a data packet has been transmitted. An interrupt is also generated at this point (if enabled). TxPktRdy is also automatically cleared (interrupt is generated) prior to loading a second packet into a double-buffered FIFO.**

A0900114 **RX1MAP** **RX1MAP Register** **0000**

Bit	15	14	13	12	11	10	9	8	7	6	5	4	3	2	1	0
Name				M1		MAXIMUM_PAYLOAD_TRANSACTION										
Type				RW		RW										
Reset				0	0	0	0	0	0	0	0	0	0	0	0	0

© 2015 - 2017 MediaTek Inc.

This document contains information that is proprietary to MediaTek Inc. ("MediaTek") and/or its licensor(s).
Any unauthorized use, reproduction or disclosure of this document in whole or in part is strictly prohibited.

Bit(s)	Name	Description
12:11	M1	**Maximum payload size for indexed RX endpoint, M1 packet multiplier m**
10:0	MAXIMUM_PAYLOAD_TRANSACTION	**The RxMaxP register defines the maximum amount of data that can be transferred through the selected Rx endpoint in a single operation. There is a RxMaxP register for each Rx endpoint (except for Endpoint 0). Bit10~0 define (in bytes) the maximum payload transmitted in a single transaction. The value set can be up to 1024 bytes but is subject to the constraints placed by the USB Specification on packet sizes for Bulk, Interrupt and Isochronous transfers in full-speed and high-speed operations.** Where the option of high-bandwidth isochronous endpoints or of combining bulk packets has been taken when the core is configured, the register includes either 2 or 5 further bits that define a multiplier m which is equal to one more than the value recorded. For Bulk endpoints with the packet combining option enabled, the multiplier m can be up to 32 and defines the number of USB packets of the specified payload which are to be combined into a single data packet within the FIFO. (If the packet splitting option is not enabled, bit15~13 will not be implemented and bit12~11 (if included) will be ignored.) For isochronous endpoints operating in high-speed mode and with the high-bandwidth option enabled, m may only be either 2 or 3 (corresponding to bit11 set or bit12 set respectively) and it specifies the maximum number of such transactions that can take place in a single microframe. If either bit11 or bit12 is not 0, the USB2.0 controller will automatically combine the separate USB packets received in any microframe into a single packet within the Rx FIFO. The maximum payload for each transaction is 1024 bytes, so this allows up to 3072 bytes to be received in each microframe. (For Isochronous/Interrupt transfers in full-speed mode or if high-bandwidth is not enabled, bit11 and 12 will be ignored.) The value written to bit10~0 (multiplied by m in the case of high-bandwidth Isochronous transfers) should match the value given in the wMaxPacketSize field of the Standard Endpoint Descriptor for the associated endpoint (see USB Specification Revision 2.0, Chapter 9). A mismatch can cause unexpected results. The total amount of data represented by the value written to this register (specified payload * m) should not exceed the FIFO size for the OUT endpoint and half the FIFO size if double-buffering is required.

A0900116 **RX1CSR_PERI** **RX1 CSR Register** **0000**

Bit	15	14	13	12	11	10	9	8	7	6	5	4	3	2	1	0
Name	AUTOCLEAR	ISO	DMAREQEN	DISNYET_PIDERR	DMAREQMODE		KEEPERSTATUS	INCOMPRX	CLRDATATOG	SENTSTALL	SENDSTALL	FLUSHFIFO	DATAERR	OVERRUN	FIFOFULL	RXPKTRDY
Type	RW	RW	RW	RW	RW		RW	A1	A0	A1	RW	A0	RU	A1	RU	A1
Reset	0	0	0	0	0		0	0	0	0	0	0	0	0	0	0

Bit(s)	Name	Description
15	AUTOCLEAR	**If the CPU sets up this bit, the RxPktRdy bit will be automatically cleared when a packet of RxMaxP bytes has been unloaded from the RxFIFO. When packets of less than the maximum packet size are unloaded, RxPktRdy will have to be cleared manually.** Note: Maximum packet size-3,-2,-1 is handled like maximum packet size which is auto cleared by hardware.
14	ISO	**The CPU sets up this bit to enable the Rx endpoint for Isochronous transfers and clears it to enable the Rx endpoint for Bulk/Interrupt**

This document contains information that is proprietary to MediaTek Inc. ("MediaTek") and/or its licensor(s).
Any unauthorized use, reproduction or disclosure of this document in whole or in part is strictly prohibited.

Bit(s)	Name	Description
		transfers.
13	DMAREQEN	**The CPU sets up this bit to enable the DMA request for the Rx endpoint.**
12	DISNYET_PIDERR	**The CPU sets up this bit to disable the sending of NYET handshakes. When set, all successfully received Rx packets will be ACK'd including at the point at which the RxFIFO becomes full.** **Note: This bit only takes effect in high-speed mode, in which it should be set for all interrupt endpoint.** This bit is set when there is a PID error in the received packet. It is cleared when RxPktRdy is cleared or write 0 to clear it.
11	DMAREQMODE	**The CPU sets up this bit to select DMA Request Mode 1 and clears it to select DMA Request Mode 0. DMA Request Mode 1: Rx endpoint interrupt is generated only when DMA Request Mode 1 and received a short packet. RxDMAReq is generated when receiving a Max-Packet-size packet. DMA Request Mode 0: No Rx endpoint interrupt. RxDMAReq will be generated when RxPktRdy is set.**
9	KEEPERRSTATUS	**This bit is used when endpoint works with USBQ and in ISOCHRONOUS mode. When this bit is set, the isochronous error, PIDERROR, INCOMPRX and DATAERROR will be kept and only cleared by SW.**
8	INCOMPRX	**This bit will be set in an Isochronous transfer if the packet in the RxFIFO is incomplete because parts of the data are not received. When KeepErrorStatus = 0, it will be cleared when RxPktRdy is cleared or write 0 to clear it.** Note: In anything other than a Isochronous transfer, this bit will always return 0. Write 0 to clear it.
7	CLRDTATOG	**The CPU writes 1 to this bit to reset the endpoint data toggle to 0.**
6	SENTSTALL	**This bit is set when a STALL handshake is transmitted. The CPU should clear this bit. An interrupt will be generated when the bit is set.** Write 0 to clear it.
5	SENDSTALL	**The CPU writes 1 to this bit to issue a STALL handshake. The CPU clears this bit to terminate the stall condition.** Note: This bit has no effect where the endpoint is being used for ISO transfers.
4	FLUSHFIFO	**The CPU writes 1 to this bit to flush the next packet to be read from the endpoint RxFIFO. The RxFIFO pointer is reset and the RxPktRdy bit is cleared.** Note: FlushFIFO should only be used when RxPktRdy is set. In other cases, it may cause data corruption. If the RxFIFO is double buffered, FlushFIFO may need to be set twice to completely clear the RxFIFO.
3	DATAERR	**This bit will be set when RxPktRdy is set if the data packet has a CRC or bit-stuff error in it. Cleared when RxPktRdy is cleared.** Note: This bit is only valid when the endpoint is operating in ISO mode. In Bulk mode, it always returns to 0.
2	OVERRUN	**This bit will be set if an OUT packet cannot be loaded into RxFIFO. The CPU should clear this bit (write 0 to clear it).** Note: This bit is only valid when the endpoint is operating in ISO mode. In Bulk mode, it always returns to 0. The new incoming packet will not be written to RxFIFO.
1	FIFOFULL	**This bit will be set when no more packets can be loaded into RxFIFO.**
0	RXPKTRDY	**This bit will be set when a data packet has been received (to RxFIFO). The CPU should clear this bit when the packet has been unloaded from RxFIFO. An interrupt will be generated when the bit is set.** Write 0 to clear it.

© 2015 - 2017 MediaTek Inc.

This document contains information that is proprietary to MediaTek Inc. ("MediaTek") and/or its licensor(s).
Any unauthorized use, reproduction or disclosure of this document in whole or in part is strictly prohibited.

A0900118 RX1COUNT Rx1 Count Register 0000

Bit	15	14	13	12	11	10	9	8	7	6	5	4	3	2	1	0
Name			RXCOUNT													
Type			RU													
Reset			0	0	0	0	0	0	0	0	0	0	0	0	0	0

Bit(s)	Name	Description
13:0	RXCOUNT	**It is a 14-bit read-only register that holds the number of received data bytes in the packet in RxFIFO.** Note: The value returned changes as the FIFO is unloaded and is only valid when RxPktRdy(RxCSR.D0) is set.

A090011A TX1TYPE Tx1Type Register 00

Bit	15	14	13	12	11	10	9	8	7	6	5	4	3	2	1	0
Name									TX_SPEED		TX_PROTOCOL		TX_TARGET_EP_NUMBER			
Type									RW		RW		RW			
Reset									0	0	0	0	0	0	0	0

Bit(s)	Name	Description
7:6	TX_SPEED	**Operating speed of the target device when the core is configured with the multipoint option** When the core is not configured with the multipoint option, these bits should not be accessed. 2'b00: Unused 2'b01: High 2'b10: Full 2'b11: Low
5:4	TX_PROTOCOL	**The CPU should set up this to select the required protocol for the Tx endpoint.** 2'b00: Illegal 2'b01: Isochronous 2'b10: Bulk 2'b11: Interrupt
3:0	TX_TARGET_EP_NUMBER	**The CPU should set this value to the endpoint number containing in the Tx endpoint descriptor returned to the USB2.0 controller during device enumeration.**

A090011B TX1INTERVAL Tx1Interval Register 00

Bit	15	14	13	12	11	10	9	8	7	6	5	4	3	2	1	0
Name									TX_POLLING_INTERVAL_NAK_LIMIT_M							
Type									RW							
Reset									0	0	0	0	0	0	0	0

Bit(s)	Name	Description
7:0	TX_POLLING_INTERVAL_NAK_LIMIT_M	**(Host mode only) TxInterval Register TxInterval is an 8-bit register that, for Interrupt and Isochronous transfers, defines the polling interval for the currently-selected Tx endpoint. For Bulk endpoints, this register sets up the number of frames/microframes after which the endpoint should time out on receiving a stream of NAK responses. There is a TxInterval register for each configured Tx endpoint (except for Endpoint 0).** In each case the value that is set defines a number of frames/microframes (high

This document contains information that is proprietary to MediaTek Inc. ("MediaTek") and/or its licensor(s).
Any unauthorized use, reproduction or disclosure of this document in whole or in part is strictly prohibited.

Bit(s)	Name	Description
		speed transfers), as the following: Transfer Type | Speed | Valid values (m) | Interpretation Interrupt | Low Speed or Full Speed | 1-255 | Polling interval is m frames. Interrupt | High Speed | 1-16 | Polling interval is 2^(m-1) microframes Isochronous | Full Speed or High Speed | 1-16 | Polling interval is 2^(m-1) frames/microframes Bulk | Full Speed or High Speed | 2-16 | NAK Limit is 2^(m-1) frames/microframes. Note: Value 0 or 1 disables the NAK timeout function. The register should be set before TxType for Bulk endpoint.

A090011C **RX1TYPE** **Rx1Type Register** **00**

Bit	15	14	13	12	11	10	9	8	7	6	5	4	3	2	1	0
Name									RXSPEED		RX_PROTOCOL		RX_TARGET_EP_NUMBER			
Type									RW		RW		RW			
Reset									0	0	0	0	0	0	0	0

Bit(s)	Name	Description
7:6	RXSPEED	**Operating speed of the target device when the core is configured with the multipoint option** When the core is not configured with the multipoint option, these bits should not be accessed. 2'b00: Unused 2'b01: High 2'b10: Full 2'b11: Low
5:4	RX_PROTOCOL	**The CPU should set up this to select the required protocol for the Tx endpoint.** 2'b00: Illegal 2'b01: Isochronous 2'b10: Bulk 2'b11: Interrupt
3:0	RX_TARGET_EP_NUMBER	**The CPU should set this value to the endpoint number containing in the Tx endpoint descriptor returned to the USB2.0 controller during device enumeration.**

A090011D **RX1INTERVAL** **Rx1Interval Register** **00**

Bit	15	14	13	12	11	10	9	8	7	6	5	4	3	2	1	0
Name									RX_POLLING_INTERVAL_NAK_LIMIT_M							
Type									RW							
Reset									0	0	0	0	0	0	0	0

Bit(s)	Name	Description
7:0	RX_POLLING_INTERVAL_NAK_LIMIT_M	**RxInterval Register RxInterval is an 8-bit register that, for Interrupt and Isochronous transfers, defines the polling interval for the currently selected Rx endpoint. For Bulk endpoints, this register sets up the number of frames/microframes after which the endpoint should time out on receiving a stream of NAK responses. There is a RxInterval register for each configured Rx endpoint (except for Endpoint 0).** RX POLLING INTERVAL / NAK LIMIT (M), (Host mode only) In each case the value that is set defines a number of frames/microframes (high speed transfers), as the following:

© 2015 - 2017 MediaTek Inc.

This document contains information that is proprietary to MediaTek Inc. ("MediaTek") and/or its licensor(s).
Any unauthorized use, reproduction or disclosure of this document in whole or in part is strictly prohibited.

Bit(s)	Name	Description
		Transfer Type Speed Valid values (m) Interpretation Interrupt Low Speed or Full Speed 1 - 255 Polling interval is m frames. High Speed 1 - 16 Polling interval is 2(m-1) microframes Isochronous Full Speed or High Speed 1 - 16 Polling interval is 2(m-1) frames/microframes Bulk Full Speed or High Speed 2 - 16 NAK Limit is 2(m-1) frames/microframes. Note: Value 0 or 1 disables the NAK timeout function. The register should be set before RxType for Bulk endpoint.

A090011F **FIFOSIZE1** **EP1 Configured FIFO Size Register** **AA**

Bit	15	14	13	12	11	10	9	8	7	6	5	4	3	2	1	0
Name									RXFIFOSIZE				TXFIFOSIZE			
Type									DC				DC			
Reset									1	0	1	0	1	0	1	0

Bit(s)	Name	Description
7:4	RXFIFOSIZE	**Indicates the RxFIFO size of 2^n bytes** Example: Value 10 means 2^10 = 1024 bytes.
3:0	TXFIFOSIZE	**Indicates the TxFIFO size of 2^n bytes** Example: Value 10 means 2^10 = 1024 bytes.

A0900120 **TX2MAP** **TX2MAP Register** **0000**

Bit	15	14	13	12	11	10	9	8	7	6	5	4	3	2	1	0
Name				M1		MAXIMUM_PAYLOAD_TRANSACTION										
Type				RW		RW										
Reset				0	0	0	0	0	0	0	0	0	0	0	0	0

Bit(s)	Name	Description
12:11	M1	**Maximum payload size for indexed TX endpoint, M1 packet multiplier m maximum payload transaction register**
10:0	MAXIMUM_PAYLOAD_TRANSACTION	**The TxMaxP register defines the maximum amount of data that can be transferred through the selected Tx endpoint in a single operation. There is a TxMaxP register for each Tx endpoint (except for Endpoint 0). Bit10~0 define (in bytes) the maximum payload transmitted in a single transaction. The value set can be up to 1024 bytes but is subject to the constraints placed by the USB Specification on packet sizes for Bulk, Interrupt and Isochronous transfers in full-speed and high-speed operations. Where the option of high-bandwidth Isochronous endpoints or of packet splitting on Bulk endpoints has been taken when the core is configured, the register includes either 2 or 5 further bits that define a multiplier m which is equal to one more than the value recorded. In the case of Bulk endpoints with the packet splitting option enabled, the multiplier m can be up to 32 and defines the maximum number of 'USB' packets (i.e. packets for transmission over the USB) of the specified payload into which a single data packet placed in the FIFO should be split, prior to transfer. (If the packet splitting option is not enabled, bit15-13 will not be implemented and bit12-11 (if included) will be ignored.)** Note: The data packet should be an exact multiple of the payload specified by bit10~0, which is itself required to be one of 8, 16, 32, 64 or (in the case of high-speed transfers) 512 bytes. For Isochronous endpoints operating in high-speed mode and with the high-bandwidth option enabled, m may only be either 2 or 3 (corresponding to bit11 set or bit12 set respectively) and it specifies the maximum number of such transactions that can take place in a single microframe. If either bit11 or bit12 is not 0, the USB2.0 controller will

© 2015 - 2017 MediaTek Inc.

This document contains information that is proprietary to MediaTek Inc. ("MediaTek") and/or its licensor(s).
Any unauthorized use, reproduction or disclosure of this document in whole or in part is strictly prohibited.

Bit(s)	Name	Description
		automatically split any data packet written to the FIFO into up to 2 or 3 'USB' packets, each containing the specified payload (or less). The maximum payload for each transaction is 1024 bytes, so this allows up to 3072 bytes to be transmitted in each microframe. (For Isochronous/Interrupt transfers in full-speed mod, bit11 and 12 are ignored.) The value written to bit10~0 (multiplied by m in the case of high-bandwidth Isochronous transfers) should match the value given in the wMaxPacketSize field of the Standard Endpoint Descriptor for the associated endpoint (see USB Specification Revision 2.0, Chapter 9). A mismatch can cause unexpected results. The total amount of data represented by the value written to this register (specified payload * m) should not exceed the FIFO size for the Tx endpoint and half the FIFO size if double-buffering is required. If this register is changed after packets have been sent from the endpoint, the Tx endpoint FIFO should be completely flushed (using the FlushFIFO bit in TxCSR) after writing the new value to this register.

A0900122 **TX2CSR_PERI** **Tx2 CSR Register** **0000**

Bit	15	14	13	12	11	10	9	8	7	6	5	4	3	2	1	0
Name	**AUTOSET**	**ISO**		**DMAREQEN**	**FRCDATATOG**	**DMAREQMODE**		**SETTXPKTRDY_TWICE**	**INCOMPTX**	**CLRDATATOG**	**SENTSTALL**	**SENDSTALL**	**FLUSHFIFO**	**UNDERRUN**	**FIFONOTEMPTY**	**TXPKTRDY**
Type	RW	RW		RW	RW	RW		A1	A1	A0	A1	RW	A0	A1	RU	A0
Reset	0	0		0	0	0		0	0	0	0	0	0	0	0	0

Bit(s)	Name	Description
15	AUTOSET	**If The CPU sets up this bit, TxPktRdy will be automatically set when data of the maximum packet size (value in TxMaxP) is loaded into the TxFIFO. If a packet of less than the maximum packet size is loaded, TxPktRdy will have to be set manually.**
14	ISO	**The CPU sets up this bit to enable the Tx endpoint for Isochronous transfers and clears it to enable the Tx endpoint for Bulk or Interrupt transfers.** Note: This bit only takes effect in peripheral mode. In host mode, it always returns to 0.
12	DMAREQEN	**The CPU sets up this bit to enable the DMA request for the Tx endpoint.**
11	FRCDATATOG	**The CPU sets up this bit to force the endpoint data toggle to switch and the data packet to be cleared from FIFO, regardless of whether an ACK is received. This can be used by Interrupt Tx endpoints that are used to communicate rate feedback for isochronous endpoints.**
10	DMAREQMODE	**The CPU sets up this bit to select DMA Request Mode 1 and clears it to select DMA Request Mode 0.** Note: This bit should not be cleared either before or in the same cycle as the DMAReqEn bit is cleared.
8	SETTXPKTRDY_TWICE	**Indicates TxPktRdy had been set when it is 1'b1 already. Write 0 to clear it.**
7	INCOMPTX	**When the endpoint is used for high-bandwidth Isochronous/Interrupt transfers, this bit is set to indicate where a large packet has been split into 2 or 3 packets for transmission but insufficient IN tokens have been received to send all the parts.** Note: In anything other than a high-bandwidth transfer, this bit will always return to 0. Write 0 to clear it.
6	CLRDATATOG	**The CPU writes 1 to this bit to reset the endpoint data toggle to 0.**

© 2015 - 2017 MediaTek Inc.

This document contains information that is proprietary to MediaTek Inc. ("MediaTek") and/or its licensor(s).
Any unauthorized use, reproduction or disclosure of this document in whole or in part is strictly prohibited.

Bit(s)	Name	Description
5	SENTSTALL	**This bit will be set when a STALL handshake is transmitted. The FIFO will be flushed and Tx interrupt generated if enabled and the TxPktRdy bit is cleared. The CPU should clear this bit.** Write 0 to clear it.
4	SENDSTALL	**The CPU writes 1 to this bit to issue a STALL handshake to an IN token. The CPU clears this bit to terminate the stall condition. Note: This bit has no effect where the endpoint is being used for Isochronous transfer. Otherwise, CPU should wait SENTSTALL interrupt generated before clearning SENDSTALL bit.**
3	FLUSHFIFO	**The CPU writes 1 to this bit to flush the latest packet from the endpoint TxFIFO. The FIFO pointer is reset, the TxPktRdy bit is cleared and an interrupt is generated. May be set simultaneously with TxPktRdy to abort the packet currently loaded into FIFO.** Note: FlushFIFO should only be used when TxPktRdy is set. In other cases, it may cause data corruption. If the FIFO is double-buffered, FlushFIFO may need to be set twice to completely clear the FIFO.
2	UNDERRUN	**The USB will set up this bit if an IN token is received when the TxPktRdy bit is not set. The CPU should clear this bit (write 0 to clear it).**
1	FIFONOTEMPTY	**The USB sets up this bit when there is at least 1 packet in TxFIFO. This bit will be asserted automatically when TXPKTRDY is set by CPU and de-asserted when CPU flushes FIFO or sends a STALL packet.**
0	TXPKTRDY	**The CPU sets up this bit after loading a data packet into FIFO. It is cleared automatically when a data packet has been transmitted. An interrupt is also generated at this point (if enabled). TxPktRdy is also automatically cleared (interrupt is generated) prior to loading a second packet into a double-buffered FIFO.**

A0900124 **RX2MAP** **RX2MAP Register** **0000**

Bit	15	14	13	12	11	10	9	8	7	6	5	4	3	2	1	0
Name				M1		MAXIMUM_PAYLOAD_TRANSACTION										
Type				RW		RW										
Reset				0	0	0	0	0	0	0	0	0	0	0	0	0

Bit(s)	Name	Description
12:11	M1	**Maximum payload size for indexed RX endpoint, M1 packet multiplier m**
10:0	MAXIMUM_PAYLOAD_TRANSACTION	**The RxMaxP register defines the maximum amount of data that can be transferred through the selected Rx endpoint in a single operation. There is a RxMaxP register for each Rx endpoint (except for Endpoint 0). Bit10~0 define (in bytes) the maximum payload transmitted in a single transaction. The value set can be up to 1024 bytes but is subject to the constraints placed by the USB Specification on packet sizes for Bulk, Interrupt and Isochronous transfers in full-speed and high-speed operations.** Where the option of high-bandwidth isochronous endpoints or of combining bulk packets has been taken when the core is configured, the register includes either 2 or 5 further bits that define a multiplier m which is equal to one more than the value recorded. For bulk endpoints with the packet combining option enabled, the multiplier m can be up to 32 and defines the number of USB packets of the specified payload which are to be combined into a single data packet within the FIFO. (If the packet splitting option is not enabled, bit15-bit13 will not be implemented and bit12-11 (if included) will be ignored.) For isochronous endpoints operating in high-speed mode and with the high-bandwidth option enabled, m may only be either 2 or 3 (corresponding to bit11 set or bit12 set respectively) and it specifies the maximum number of such transactions that can take place in a single

© 2015 - 2017 MediaTek Inc.

This document contains information that is proprietary to MediaTek Inc. ("MediaTek") and/or its licensor(s).
Any unauthorized use, reproduction or disclosure of this document in whole or in part is strictly prohibited.

Bit(s)	Name	Description
		microframe. If either bit11 or bit12 is not 0, the USB2.0 controller will automatically combine the separate USB packets received in any microframe into a single packet within Rx FIFO. The maximum payload for each transaction is 1024 bytes, so this allows up to 3072 bytes to be received in each microframe. (For Isochronous/Interrupt transfers in full-speed mode or if high-bandwidth is not enabled, bit11 and 12 will be ignored.) The value written to bit10~0 (multiplied by m in the case of high-bandwidth Isochronous transfers) should match the value given in the wMaxPacketSize field of the Standard Endpoint Descriptor for the associated endpoint (see USB Specification Revision 2.0, Chapter 9). A mismatch can cause unexpected results. The total amount of data represented by the value written to this register (specified payload * m) should not exceed the FIFO size for the OUT endpoint and half the FIFO size if double-buffering is required.

A0900126 **RX2CSR_PERI** **RX2 CSR Register** **0000**

Bit	15	14	13	12	11	10	9	8	7	6	5	4	3	2	1	0
Name	AUTOCLEAR	ISO	DMAREQEN	DISNYET_PIDERR	DMAREQMODE		KEEPERRSTATUS	INCOMPRX	CLRDATATOG	SENTSTALL	SENDSTALL	FLUSHFIFO	DATAERR	OVERRUN	FIFOFULL	RXPKTRDY
Type	RW	RW	RW	RW	RW		RW	A1	A0	A1	RW	A0	RU	A1	RU	A1
Reset	0	0	0	0	0		0	0	0	0	0	0	0	0	0	0

Bit(s)	Name	Description
15	AUTOCLEAR	**If the CPU sets up this bit, the RxPktRdy bit will be automatically cleared when a packet of RxMaxP bytes has been unloaded from RxFIFO. When packets of less than the maximum packet size are unloaded, RxPktRdy will have to be cleared manually.** Note: Maximum packet size-3,-2,-1 is handled like maximum packet size which is auto cleared by hardware.
14	ISO	**The CPU sets up this bit to enable the Rx endpoint for Isochronous transfers and clears it to enable the Rx endpoint for bulk/interrupt transfers.**
13	DMAREQEN	**The CPU sets up this bit to enable the DMA request for the Rx endpoint.**
12	DISNYET_PIDERR	**The CPU sets up this bit to disable the sending of NYET handshakes. When set, all successfully received Rx packets will be ACK'd including at the point at which the RxFIFO becomes full.** **Note: This bit only takes effect in high-speed mode, in which it should be set for all interrupt endpoints.** This bit will be set when there is a PID error in the received packet. Cleared when RxPktRdy is cleared or write 0 to clear it.
11	DMAREQMODE	**The CPU sets up this bit to select DMA Request Mode 1 and clears it to select DMA Request Mode 0.** DMA Request Mode 1: Rx endpoint interrupt is generated only when DMA Request Mode 1 and received a short packet. RxDMAReq is generated when receiving a Max-Packet-size packet. DMA Request Mode 0: No Rx endpoint interrupt. RxDMAReq will be generated when RxPktRdy is set.
9	KEEPERRSTATUS	**This bit is used when endpoint works with USBQ and in ISOCHRONOUS mode. When this bit is set, the isochronous error, PIDERROR, INCOMPRX and DATAERROR will be kept and only cleared by SW.**
8	INCOMPRX	**This bit will be set in an Isochronous transfer if the packet in the**

This document contains information that is proprietary to MediaTek Inc. ("MediaTek") and/or its licensor(s).
Any unauthorized use, reproduction or disclosure of this document in whole or in part is strictly prohibited.

Bit(s)	Name	Description
		RxFIFO is incomplete because parts of the data are not received. When KeepErrorStatus = 0, it will be cleared when RxPktRdy is cleared or write 0 to clear it. Note: In anything other than a Isochronous transfer, this bit will always return 0. Write 0 to clear it.
7	CLRDTATOG	**The CPU writes 1 to this bit to reset the endpoint data toggle to 0.**
6	SENTSTALL	**This bit will be set when a STALL handshake is transmitted. The CPU should clear this bit. An interrupt will be generated when the bit is set.** Write 0 to clear it.
5	SENDSTALL	**The CPU writes 1 to this bit to issue a STALL handshake. The CPU clears this bit to terminate the stall condition.** **Note: This bit has no effect where the endpoint is used for ISO transfers.**
4	FLUSHFIFO	**The CPU writes 1 to this bit to flush the next packet to be read from the endpoint RxFIFO. The RxFIFO pointer is reset and the RxPktRdy bit is cleared.** Note: FlushFIFO should only be used when RxPktRdy is set. In other cases, it may cause data corruption. If the RxFIFO is double buffered, FlushFIFO may need to be set twice to completely clear RxFIFO.
3	DATAERR	**This bit is set when RxPktRdy is set if the data packet has a CRC or bit-stuff error in it. Cleared when RxPktRdy is cleared.** Note: This bit is only valid when the endpoint is operating in ISO mode. In bulk mode, it always returns to 0.
2	OVERRUN	**This bit will be set if an OUT packet cannot be loaded into RxFIFO. The CPU should clear this bit (write 0 to clear it).** Note: This bit is only valid when the endpoint is operating in ISO mode. In bulk mode, it always returns to 0. The new incoming packet will not be written to RxFIFO.
1	FIFOFULL	**This bit will be set when no more packets can be loaded into RxFIFO.**
0	RXPKTRDY	**This bit will be set when a data packet has been received (to RxFIFO). The CPU should clear this bit when the packet has been unloaded from RxFIFO. An interrupt will be generated when the bit is set.** Write 0 to clear it.

A0900128 RX2COUNT Rx2 Count Register 0000

Bit	15	14	13	12	11	10	9	8	7	6	5	4	3	2	1	0
Name			RXCOUNT													
Type			RU													
Reset			0	0	0	0	0	0	0	0	0	0	0	0	0	0

Bit(s)	Name	Description
13:0	RXCOUNT	**It is a 14-bit read-only register that holds the number of received data bytes in the packet in RxFIFO.** Note: The value returned changes as the FIFO is unloaded and is only valid when RxPktRdy(RxCSR.D0) is set.

A090012A TX2TYPE Tx2Type Register 00

Bit	15	14	13	12	11	10	9	8	7	6	5	4	3	2	1	0
Name									TX_SPEED		TX_PROTOCOL		TX_TARGET_EP_NUMBER			
Type									RW		RW		RW			
Reset									0	0	0	0	0	0	0	0

© 2015 - 2017 MediaTek Inc.

This document contains information that is proprietary to MediaTek Inc. ("MediaTek") and/or its licensor(s).
Any unauthorized use, reproduction or disclosure of this document in whole or in part is strictly prohibited.

Bit(s)	Name	Description
7:6	TX_SPEED	**Operating speed of the target device when the core is configured with the multipoint option** When the core is not configured with the multipoint option, these bits should not be accessed. 2'b00: Unused 2'b01: High 2'b10: Full 2'b11: Low
5:4	TX_PROTOCOL	**The CPU should set up this to select the required protocol for the Tx endpoint.** 2'b00: Illegal 2'b01: Isochronous 2'b10: Bulk 2'b11: Interrupt
3:0	TX_TARGET_EP_NUMBER	**The CPU should set this value to the endpoint number containing in the Tx endpoint descriptor returned to the USB2.0 controller during device enumeration.**

A090012B **TX2INTERVAL** **Tx2Interval Register** **00**

Bit	15	14	13	12	11	10	9	8	7	6	5	4	3	2	1	0
Name									TX_POLLING_INTERVAL_NAK_LIMIT_M							
Type									RW							
Reset									0	0	0	0	0	0	0	0

Bit(s)	Name	Description
7:0	TX_POLLING_INTERVAL_NAK_LIMIT_M	**(Host mode only) TxInterval Register TxInterval is an 8-bit register that, for Interrupt and Isochronous transfers, defines the polling interval for the currently selected Tx endpoint. For bulk endpoints, this register sets up the number of frames/microframes after which the endpoint should time out on receiving a stream of NAK responses. There is a TxInterval register for each configured Tx endpoint (except for Endpoint 0).** In each case the value that is set defines a number of frames/microframes (high speed transfers), as the following: Transfer Type | Speed | Valid values (m) | Interpretation Interrupt | Low Speed or Full Speed | 1-255 | Polling interval is m frames. Interrupt | High Speed | 1-16 | Polling interval is 2^(m-1) microframes Isochronous | Full Speed or High Speed | 1-16 | Polling interval is 2^(m-1) frames/microframes Bulk | Full Speed or High Speed | 2-16 | NAK Limit is 2^(m-1) frames/microframes. Note: Value 0 or 1 disables the NAK timeout function. The register should be set before TxType for Bulk endpoint.

A090012C **RX2TYPE** **Rx2Type Register** **00**

Bit	15	14	13	12	11	10	9	8	7	6	5	4	3	2	1	0
Name									RXSPEED		RX_PROTOCOL		RX_TARGET_EP_NUMBER			
Type									RW		RW		RW			
Reset									0	0	0	0	0	0	0	0

Bit(s)	Name	Description
7:6	RXSPEED	**Operating speed of the target device when the core is configured with the multipoint option** When the core is not configured with the multipoint option, these bits should not

This document contains information that is proprietary to MediaTek Inc. ("MediaTek") and/or its licensor(s).
Any unauthorized use, reproduction or disclosure of this document in whole or in part is strictly prohibited.

Bit(s)	Name	Description
		be accessed. 2'b00: Unused 2'b01: High 2'b10: Full 2'b11: Low
5:4	RX_PROTOCOL	**The CPU should set up this to select the required protocol for the Tx endpoint.** 2'b00: Illegal 2'b01: Isochronous 2'b10: Bulk 2'b11: Interrupt
3:0	RX_TARGET_EP_NUMBER	**The CPU should set this value to the endpoint number containing in the Tx endpoint descriptor returned to the USB2.0 controller during device enumeration.**

A090012D **RX2INTERVAL** **Rx2Interval Register** **00**

Bit	15	14	13	12	11	10	9	8	7	6	5	4	3	2	1	0
Name									RX_POLLING_INTERVAL_NAK_LIMIT_M							
Type									RW							
Reset									0	0	0	0	0	0	0	0

Bit(s)	Name	Description
7:0	RX_POLLING_INTERVAL_NAK_LIMIT_M	**RxInterval Register RxInterval is an 8-bit register that, for Interrupt and Isochronous transfers, defines the polling interval for the currently selected Rx endpoint. For bulk endpoints, this register sets up the number of frames/microframes after which the endpoint should time out on receiving a stream of NAK responses. There is a RxInterval register for each configured Rx endpoint (except for Endpoint 0).** RX POLLING INTERVAL / NAK LIMIT (M), (Host mode only) In each case the value that is set defines a number of frames/microframes (high speed transfers), as the following: Transfer Type Speed Valid values (m) Interpretation Interrupt Low Speed or Full Speed 1 - 255 Polling interval is m frames. High Speed 1 - 16 Polling interval is 2(m-1) microframes Isochronous Full Speed or High Speed 1 - 16 Polling interval is 2(m-1) frames/microframes Bulk Full Speed or High Speed 2 - 16 NAK Limit is 2(m-1) frames/microframes. Note: Value 0 or 1 disables the NAK timeout function. The register should be set before RxType for bulk endpoint.

A090012F **FIFOSIZE2** **EP2 Configured FIFO Size Register** **AA**

Bit	15	14	13	12	11	10	9	8	7	6	5	4	3	2	1	0
Name									RXFIFOSIZE				TXFIFOSIZE			
Type									DC				DC			
Reset									1	0	1	0	1	0	1	0

Bit(s)	Name	Description
7:4	RXFIFOSIZE	**Indicates the RxFIFO size of 2^n bytes** Example: Value 10 means 2^10 = 1024 bytes.

© 2015 - 2017 MediaTek Inc.

This document contains information that is proprietary to MediaTek Inc. ("MediaTek") and/or its licensor(s).
Any unauthorized use, reproduction or disclosure of this document in whole or in part is strictly prohibited.

A0900130 TX3MAP TX3MAP Register 0000

Bit	15	14	13	12	11	10	9	8	7	6	5	4	3	2	1	0
Name				M1		MAXIMUM_PAYLOAD_TRANSACTION										
Type				RW		RW										
Reset				0	0	0	0	0	0	0	0	0	0	0	0	0

Bit(s)	Name	Description
12:11	M1	**Maximum payload size for indexed TX endpoint, M1 packet multiplier m maximum payload transaction register**
10:0	MAXIMUM_PAYLOAD_TRANSACTION	**The TxMaxP register defines the maximum amount of data that can be transferred through the selected Tx endpoint in a single operation. There is a TxMaxP register for each Tx endpoint (except for Endpoint 0). Bit10~0 define (in bytes) the maximum payload transmitted in a single transaction. The value set can be up to 1024 bytes but is subject to the constraints placed by the USB Specification on packet sizes for Bulk, Interrupt and Isochronous transfers in full-speed and high-speed operations. Where the option of high-bandwidth isochronous endpoints or of packet splitting on bulk endpoints has been taken when the core is configured, the register includes either 2 or 5 further bits that define a multiplier m which is equal to one more than the value recorded. In the case of bulk endpoints with the packet splitting option enabled, the multiplier m can be up to 32 and defines the maximum number of 'USB' packets (i.e. packets for transmission over the USB) of the specified payload into which a single data packet placed in the FIFO should be split, prior to transfer. (If the packet splitting option is not enabled, bit15-13 will not be implemented and bit12-11 (if included) will be ignored.)** Note: The data packet should be an exact multiple of the payload specified by bit10~0, which is itself required to be one of 8, 16, 32, 64 or (in the case of high speed transfers) 512 bytes. For isochronous endpoints operating in high-speed mode and with the high-bandwidth option enabled, m may only be either 2 or 3 (corresponding to bit11 set or bit12 set respectively) and it specifies the maximum number of such transactions that can take place in a single microframe. If either bit11 or bit 12 is not 0, the USB2.0 controller will automatically split any data packet written to FIFO into up to 2 or 3 'USB' packets, each containing the specified payload (or less). The maximum payload for each transaction is 1024 bytes, so this allows up to 3072 bytes to be transmitted in each microframe. (For Isochronous/Interrupt transfers in full-speed mode, bit11 and 12 are ignored.) The value written to bit10~0 (multiplied by m in the case of high-bandwidth Isochronous transfers) should match the value given in the wMaxPacketSize field of the Standard Endpoint Descriptor for the associated endpoint (see USB Specification Revision 2.0, Chapter 9). A mismatch can cause unexpected results. The total amount of data represented by the value written to this register (specified payload * m) should not exceed the FIFO size for the Tx endpoint and half the FIFO size if double-buffering is required. If this register is changed after packets have been sent from the endpoint, the Tx endpoint FIFO should be completely flushed (using the FlushFIFO bit in TxCSR) after writing the new value to this register.

A0900132 TX3CSR_PERI Tx3 CSR Register 0000

Bit	15	14	13	12	11	10	9	8	7	6	5	4	3	2	1	0
Name	AUTOSET	ISO		DMAREQEN	FRCDATATOG	DMAREQMODE		SETTXPKTRDY_TWICE	INCOMPTX	CLRDATATOG	SENTSTALL	SENDSTALL	FLUSHFIFO	UNDERRUN	FIFONOTEMPTY	TXPKTRDY
Type	RW	RW		RW	RW	RW		A1	A1	A0	A1	RW	A0	A1	RU	A0
Reset	0	0		0	0	0		0	0	0	0	0	0	0	0	0

© 2015 - 2017 MediaTek Inc.
This document contains information that is proprietary to MediaTek Inc. ("MediaTek") and/or its licensor(s).
Any unauthorized use, reproduction or disclosure of this document in whole or in part is strictly prohibited.

Bit(s)	Name	Description
15	AUTOSET	**If the CPU sets up this bit, TxPktRdy will be automatically set when data of the maximum packet size (value in TxMaxP) is loaded into TxFIFO. If a packet of less than the maximum packet size is loaded, TxPktRdy will have to be set manually.**
14	ISO	**The CPU sets up this bit to enable the Tx endpoint for Isochronous transfers and clears it to enable the Tx endpoint for Bulk or Interrupt transfers.** Note: This bit only takes effect in peripheral mode. In host mode, it always returns to 0.
12	DMAREQEN	**The CPU sets up this bit to enable the DMA request for the Tx endpoint.**
11	FRCDATATOG	**The CPU sets up this bit to force the endpoint data toggle to switch and the data packet to be cleared from FIFO, regardless of whether an ACK is received. This can be used by interrupt Tx endpoints that are used to communicate rate feedback for isochronous endpoints.**
10	DMAREQMODE	**The CPU sets up this bit to select DMA Request Mode 1 and clears it to select DMA Request Mode 0.** Note: This bit should not be cleared either before or in the same cycle as the DMAReqEn bit is cleared.
8	SETTXPKTRDY_ TWICE	**Indicates TxPktRdy had been set when it is 1'b1 already. Write 0 to clear it.**
7	INCOMPTX	**When the endpoint is used for high-bandwidth Isochronous/Interrupt transfers, this bit is set to indicate where a large packet has been split into 2 or 3 packets for transmission but insufficient IN tokens have been received to send all the parts.** Note: In anything other than a high-bandwidth transfer, this bit will always return to 0. Write 0 to clear it.
6	CLRDATATOG	**The CPU writes 1 to this bit to reset the endpoint data toggle to 0.**
5	SENTSTALL	**This bit will be set when a STALL handshake is transmitted. The FIFO will be flushed and Tx interrupt generated if enabled and the TxPktRdy bit is cleared. The CPU should clear this bit.** Write 0 to clear it.
4	SENDSTALL	**The CPU writes 1 to this bit to issue a STALL handshake to an IN token. The CPU clears this bit to terminate the stall condition.** **Note: This bit has no effect where the endpoint is used for Isochronous transfer. Otherwise, CPU should wait for SENTSTALL interrupt to be generated before clearing the SENDSTALL bit.**
3	FLUSHFIFO	**The CPU writes 1 to this bit to flush the latest packet from the endpoint TxFIFO. The FIFO pointer is reset, the TxPktRdy bit is cleared and an interrupt is generated. May be set simultaneously with TxPktRdy to abort the packet currently loaded into FIFO.** Note: FlushFIFO should only be used when TxPktRdy is set. In other cases, it may cause data corruption. If FIFO is double-buffered, FlushFIFO may need to be set twice to completely clear FIFO.
2	UNDERRUN	**The USB will set up this bit if an IN token is received when the TxPktRdy bit not set. The CPU should clear this bit (write 0 to clear it).**
1	FIFONOTEMPTY	**The USB will set up this bit when there is at least 1 packet in TxFIFO. This bit will be asserted automatically when TXPKTRDY is set by CPU and de-asserted when CPU flush FIFO or send a STALL packet.**
0	TXPKTRDY	**The CPU will set up this bit after loading a data packet into FIFO. It is cleared automatically when a data packet has been transmitted. An interrupt is also generated at this point (if enabled). TxPktRdy is also automatically cleared (interrupt is generated) prior to loading a second packet into a double-buffered FIFO.**

© 2015 - 2017 MediaTek Inc.

This document contains information that is proprietary to MediaTek Inc. (“MediaTek”) and/or its licensor(s).
Any unauthorized use, reproduction or disclosure of this document in whole or in part is strictly prohibited.

A090013A **TX3TYPE** **Tx3Type Register** **00**

Bit	15	14	13	12	11	10	9	8	7	6	5	4	3	2	1	0
Name									TX_SPEED		TX_PROTOCOL		TX_TARGET_EP_NUMBER			
Type									RW		RW		RW			
Reset									0	0	0	0	0	0	0	0

Bit(s)	Name	Description
7:6	TX_SPEED	**Operating speed of the target device when the core is configured with the multipoint option** When the core is not configured with the multipoint option, these bits should not be accessed. 2'b00: Unused 2'b01: High 2'b10: Full 2'b11: Low
5:4	TX_PROTOCOL	**The CPU should set up this to select the required protocol for the Tx endpoint.** 2'b00: Illegal 2'b01: Isochronous 2'b10: Bulk 2'b11: Interrupt
3:0	TX_TARGET_EP_NUMBER	**The CPU should set this value to the endpoint number containing in the Tx endpoint descriptor returned to the USB2.0 controller during device enumeration.**

A090013B **TX3INTERVAL** **Tx3Interval Register** **00**

Bit	15	14	13	12	11	10	9	8	7	6	5	4	3	2	1	0
Name									TX_POLLING_INTERVAL_NAK_LIMIT_M							
Type									RW							
Reset									0	0	0	0	0	0	0	0

Bit(s)	Name	Description
7:0	TX_POLLING_INTERVAL_NAK_LIMIT_M	**(Host mode only) TxInterval Register TxInterval is an 8-bit register that, for Interrupt and Isochronous transfers, defines the polling interval for the currently selected Tx endpoint. For bulk endpoints, this register sets up the number of frames/microframes after which the endpoint should time out on receiving a stream of NAK responses. There is a TxInterval register for each configured Tx endpoint (except for Endpoint 0).** In each case the value that is set defines a number of frames/microframes (high speed transfers), as the following: Transfer Type | Speed | Valid values (m) | Interpretation Interrupt | Low Speed or Full Speed | 1-255 | Polling interval is m frames. Interrupt | High Speed | 1-16 | Polling interval is 2^(m-1) microframes Isochronous | Full Speed or High Speed | 1-16 | Polling interval is 2^(m-1) frames/microframes Bulk | Full Speed or High Speed | 2-16 | NAK Limit is 2^(m-1) frames/microframes. Note: Value 0 or 1 disables the NAK timeout function. The register should be set before TxType for Bulk endpoint.

© 2015 - 2017 MediaTek Inc.

This document contains information that is proprietary to MediaTek Inc. ("MediaTek") and/or its licensor(s).
Any unauthorized use, reproduction or disclosure of this document in whole or in part is strictly prohibited.

A090013F FIFOSIZE3 EP3 Configured FIFO Size Register 2A

Bit	15	14	13	12	11	10	9	8	7	6	5	4	3	2	1	0
Name													TXFIFOSIZE			
Type													DC			
Reset													1	0	1	0

Bit(s)	Name	Description
3:0	TXFIFOSIZE	**Indicates the TxFIFO size of 2^n bytes** Example: Value 10 means 2^10 = 1024 bytes.

A0900140 TX4MAP TX4MAP Register 0000

Bit	15	14	13	12	11	10	9	8	7	6	5	4	3	2	1	0
Name				M1		MAXIMUM_PAYLOAD_TRANSACTION										
Type				RW		RW										
Reset				0	0	0	0	0	0	0	0	0	0	0	0	0

Bit(s)	Name	Description
12:11	M1	**Maximum payload size for indexed TX endpoint, M1 packet multiplier m maximum payload transaction register**
10:0	MAXIMUM_PAYLOAD_TRANSACTION	**The TxMaxP register defines the maximum amount of data that can be transferred through the selected Tx endpoint in asingle operation. There is a TxMaxP register for each Tx endpoint (except for Endpoint 0). Bit10~0 define (in bytes) the maximum payload transmitted in a single transaction. The value set can be up to 1024 bytes but is subject to the constraints placed by the USB Specification on packet sizes for Bulk, Interrupt and Isochronous transfers in full-speed and high-speed operations. Where the option of high-bandwidth isochronous endpoints or of packet splitting on bulk endpoints has been taken when the core is configured, the register includes either 2 or 5 further bits that define a multiplier m which is equal to one more than the value recorded. In the case of bulk endpoints with the packet splitting option enabled, the multiplier m can be up to 32 and defines the maximum number of 'USB' packets (i.e. packets for transmission over the USB) of the specified payload into which a single data packet placed in the FIFO should be split, prior to transfer. (If the packet splitting option is not enabled, bit15-13 will not be implemented and bit12-11 (if included) will be ignored.)** Note: The data packet should be an exact multiple of the payload specified by bit10~0, which is itself required to be one of 8, 16, 32, 64 or (in the case of high speed transfers) 512 bytes. For isochronous endpoints operating in high-speed mode and with the high-bandwidth option enabled, m may only be either 2 or 3 (corresponding to bit11 set or bit12 set respectively) and it specifies the maximum number of such transactions that can take place in a single microframe. If either bit11 or bit12 is not 0, the USB2.0 controller will automatically split any data packet written to the FIFO into up to 2 or 3 'USB' packets, each containing the specified payload (or less). The maximum payload for each transaction is 1024 bytes, so this allows up to 3072 bytes to be transmitted in each microframe. (For Isochronous/Interrupt transfers in full-speed mode, bit 11 and 12 are ignored.) The value written to bit10~0 (multiplied by m in the case of high-bandwidth Isochronous transfers) should match the value given in the wMaxPacketSize field of the Standard Endpoint Descriptor for the associated endpoint (see USB Specification Revision 2.0, Chapter 9). A mismatch can cause unexpected results. The total amount of data represented by the value written to this register (specified payload * m) should not exceed the FIFO size for the Tx endpoint and half the FIFO size if double-buffering is required. If this register is changed after packets have been sent from the endpoint, the Tx endpoint FIFO should be completely flushed (using the FlushFIFO bit in TxCSR) after writing the new value to this register.

© 2015 - 2017 MediaTek Inc.

This document contains information that is proprietary to MediaTek Inc. (“MediaTek”) and/or its licensor(s).
Any unauthorized use, reproduction or disclosure of this document in whole or in part is strictly prohibited.

A0900142	TX4CSR_PERI	Tx4 CSR Register	0000

Bit	15	14	13	12	11	10	9	8	7	6	5	4	3	2	1	0
Name	AUTOSET	ISO		DMAREQEN	FRCDATATOG	DMAREQMODE		SETTXPKTRDY_TWICE	INCOMPTX	CLRDATATOG	SENTSTALL	SENDSTALL	FLUSHFIFO	UNDERRUN	FIFONOTEMPTY	TXPKTRDY
Type	RW	RW		RW	RW	RW		A1	A1	A0	A1	RW	A0	A1	RU	A0
Reset	0	0		0	0	0		0	0	0	0	0	0	0	0	0

Bit(s)	Name	Description
15	AUTOSET	**If the CPU sets up this bit, TxPktRdy will be automatically set when data of the maximum packet size (value in TxMaxP) is loaded into TxFIFO. If a packet of less than the maximum packet size is loaded, TxPktRdy will have to be set manually.**
14	ISO	**The CPU sets up this bit to enable the Tx endpoint for Isochronous transfers and clears it to enable the Tx endpoint for Bulk or Interrupt transfers.** Note: This bit only takes effect in peripheral mode. In host mode, it always returns to 0.
12	DMAREQEN	**The CPU sets up this bit to enable the DMA request for the Tx endpoint.**
11	FRCDATATOG	**The CPU sets up this bit to force the endpoint data toggle to switch and the data packet to be cleared from the FIFO, regardless of whether an ACK is received. This can be used by Interrupt Tx endpoints that are used to communicate rate feedback for isochronous endpoints.**
10	DMAREQMODE	**The CPU sets up this bit to select DMA Request Mode 1 and clears it to select DMA Request Mode 0.** Note: This bit should not be cleared either before or in the same cycle as the DMAReqEn bit is cleared.
8	SETTXPKTRDY_TWICE	**Indicates TxPktRdy had been set when it is 1'b1 already. Write 0 to clear it.**
7	INCOMPTX	**When the endpoint is used for high-bandwidth Isochronous/Interrupt transfers, this bit will be set to indicate where a large packet has been split into 2 or 3 packets for transmission but insufficient IN tokens have been received to send all the parts.** Note: In anything other than a high-bandwidth transfer, this bit will always return to 0. Write 0 to clear it.
6	CLRDATATOG	**The CPU writes 1 to this bit to reset the endpoint data toggle to 0.**
5	SENTSTALL	**This bit will be set when a STALL handshake is transmitted. The FIFO will be flushed and Tx interrupt generated if enabled and the TxPktRdy bit is cleared. The CPU should clear this bit.** Write 0 to clear it.
4	SENDSTALL	**The CPU writes 1 to this bit to issue a STALL handshake to an IN token. The CPU clears this bit to terminate the stall condition.** **Note: This bit has no effect where the endpoint is used for Isochronous transfer. Otherwise, CPU should wait for SENTSTALL interrupt to be generated before clearing the SENDSTALL bit.**
3	FLUSHFIFO	**The CPU writes 1 to this bit to flush the latest packet from the endpoint TxFIFO. The FIFO pointer is reset, the TxPktRdy bit is cleared and an interrupt is generated. May be set simultaneously with TxPktRdy to abort the packet currently loaded into FIFO.** Note: FlushFIFO should only be used when TxPktRdy is set. In other cases, it

© 2015 - 2017 MediaTek Inc.

This document contains information that is proprietary to MediaTek Inc. ("MediaTek") and/or its licensor(s).
Any unauthorized use, reproduction or disclosure of this document in whole or in part is strictly prohibited.

Bit(s)	Name	Description
		may cause data corruption. If the FIFO is double-buffered, FlushFIFO may need to be set twice to completely clear the FIFO.
2	UNDERRUN	**The USB will set up this bit if an IN token is received when the TxPktRdy bit not set. The CPU should clear this bit (write 0 to clear it).**
1	FIFONOTEMPTY	**The USB will set up this bit when there is at least 1 packet in the TxFIFO. This bit will be asserted automatically when TXPKTRDY is set by CPU and de-asserted when CPU flushes FIFO or sends a STALL packet.**
0	TXPKTRDY	**The CPU will set up this bit after loading a data packet into FIFO. It is cleared automatically when a data packet has been transmitted. An interrupt is also generated at this point (if enabled). TxPktRdy is also automatically cleared (interrupt is generated) prior to loading a second packet into a double-buffered FIFO.**

A090014A **TX4TYPE** **Tx4Type Register** **00**

Bit	15	14	13	12	11	10	9	8	7	6	5	4	3	2	1	0
Name									TX_SPEED		TX_PROTOCOL		TX_TARGET_EP_NUMBER			
Type									RW		RW		RW			
Reset									0	0	0	0	0	0	0	0

Bit(s)	Name	Description
7:6	TX_SPEED	**Operating speed of the target device when the core is configured with the multipoint option** When the core is not configured with the multipoint option, these bits should not be accessed. 2'b00: Unused 2'b01: High 2'b10: Full 2'b11: Low
5:4	TX_PROTOCOL	**The CPU should set up this to select the required protocol for the Tx endpoint.** 2'b00: Illegal 2'b01: Isochronous 2'b10: Bulk 2'b11: Interrupt
3:0	TX_TARGET_EP_NUMBER	**The CPU should set this value to the endpoint number containing in the Tx endpoint descriptor returned to the USB2.0 controller during device enumeration.**

A090014B **TX4INTERVAL** **Tx4Interval Register** **00**

Bit	15	14	13	12	11	10	9	8	7	6	5	4	3	2	1	0
Name									TX_POLLING_INTERVAL_NAK_LIMIT_M							
Type									RW							
Reset									0	0	0	0	0	0	0	0

Bit(s)	Name	Description
7:0	TX_POLLING_INTERVAL_NAK_LIMIT_M	**(Host mode only) TxInterval Register TxInterval is an 8-bit register that, for Interrupt and Isochronous transfers, defines the polling interval for the currently selected Tx endpoint. For bulk endpoints, this register sets up the number of frames/microframes after which**

© 2015 - 2017 MediaTek Inc.

This document contains information that is proprietary to MediaTek Inc. ("MediaTek") and/or its licensor(s).
Any unauthorized use, reproduction or disclosure of this document in whole or in part is strictly prohibited.

Bit(s)	Name	Description
		the endpoint should time out on receiving a stream of NAK responses. There is a TxInterval register for each configured Tx endpoint (except for Endpoint 0). In each case the value that is set defines a number of frames/microframes (high speed transfers), as the following: Transfer Type | Speed | Valid values (m) | Interpretation Interrupt | Low Speed or Full Speed | 1-255 | Polling interval is m frames. Interrupt | High Speed | 1-16 | Polling interval is 2^(m-1) microframes Isochronous | Full Speed or High Speed | 1-16 | Polling interval is 2^(m-1) frames/microframes Bulk | Full Speed or High Speed | 2-16 | NAK Limit is 2^(m-1) frames/microframes. Note: Value 0 or 1 disables the NAK timeout function. The register should be set before TxType for Bulk endpoint.

A090014F **FIFOSIZE4** **EP4 Configured FIFO Size Register** **2A**

Bit	15	14	13	12	11	10	9	8	7	6	5	4	3	2	1	0
Name													TXFIFOSIZE			
Type													DC			
Reset													1	0	1	0

Bit(s)	Name	Description
3:0	TXFIFOSIZE	**Indicates the TxFIFO size of 2^n bytes** Example: Value 10 means 2^10 = 1024 bytes.

A0900200 **DMA_INTR** **DMA Interrupt Status Register** **00000000**

Bit	31	30	29	28	27	26	25	24	23	22	21	20	19	18	17	16
Name	DMA_INTR_UNMASK_SET								DMA_INTR_UNMASK_CLEAR							
Type	A0								A0							
Reset	0	0	0	0	0	0	0	0	0	0	0	0	0	0	0	0
Bit	15	14	13	12	11	10	9	8	7	6	5	4	3	2	1	0
Name	DMA_INTR_UNMASK								DMA_INTR_STATUS							
Type	RU								W1C							
Reset	0	0	0	0	0	0	0	0	0	0	0	0	0	0	0	0

Bit(s)	Name	Description
31:24	DMA_INTR_UNMASK_SET	**Sets DMA_INTR_UNMASK to 1**
23:16	DMA_INTR_UNMASK_CLEAR	**Clears DMA_INTR_UNMASK to 0**
15:8	DMA_INTR_UNMASK	**Unmasks DMA interrupts** The DMA interrupt will be generated when DMA_INTR_UNMASK and DMA_INTR_STATUS are both 1.
7:0	DMA_INTR_STATUS	**Indicates DMA complete interrupt status, one bit per DMA channel implemented** Bit 0 is used for DMA channel 1; bit 1 is used for DMA channel 2, etc. Write 1 to clear it. Note: DMA interrupt will be asserted after disabling the DMA enable when receiving a null packet even thought DMA_COUNT_M still does not reach 0.

© 2015 - 2017 MediaTek Inc.

This document contains information that is proprietary to MediaTek Inc. ("MediaTek") and/or its licensor(s).
Any unauthorized use, reproduction or disclosure of this document in whole or in part is strictly prohibited.

A0900204 **DMA_CNTL_0** **DMA Channel 0 Control Register** **0000**

Bit	15	14	13	12	11	10	9	8	7	6	5	4	3	2	1	0
Name			DMAABORT		DMACHEN	BURST_MODE		BUSERR	ENDPNT				INTEN	DMAMODE	DMADIR	DMAEN
Type			A0		RU	RW		RU	RW				RW	RW	RW	Other
Reset			0		0	0	0	0	0	0	0	0	0	0	0	0

Bit(s)	Name	Description
13	DMAABORT	**If SW needs to abort the current DMA transfer, set DMAABORT=1 and DMAEN=0. After the transfer is aborted completely, DMA interrupt will occur.**
11	DMACHEN	**DMA channel enable monitor bit**
10:9	BURST_MODE	2'b00: Burst Mode 0: Bursts of unspecified length 2'b01: Burst Mode 1: INCR4 or unspecified length 2'b10: Burst Mode 2: INCR8, INCR4 or unspecified length 2'b11: Burst Mode 3: INCR16, INCR8, INCR4 or unspecified length
8	BUSERR	**Bus error**
7:4	ENDPNT	**Endpoint which DMA will transfer with**
3	INTEN	**Enables interrupt**
2	DMAMODE	**DMA mode** DMA mode 0: Single packet operation DMA mode 1: Multi packets operation, with the configuration of DMAReqMode in RXCSR bit 11 DMA mode 1 can support both known and unknown size transaction.
1	DMADIR	**Direction** 0: DMA write (Rx endpoint) 1: DMA read (Tx endpoint)
0	DMAEN	**Enables DMA** The bit will be cleared when the DMA transfer is completed. Programmers should not disable DMA_en before the transfer is completed. If programmers disable dma_en during the transfer, DMA will not stop immediately until the last bus transfer is completed.

A0900208 **DMA_ADDR_0** **DMA Channel 0 Address Register** **00000000**

Bit	31	30	29	28	27	26	25	24	23	22	21	20	19	18	17	16
Name	DMA_ADDR_0[31:16]															
Type	RW															
Reset	0	0	0	0	0	0	0	0	0	0	0	0	0	0	0	0
Bit	15	14	13	12	11	10	9	8	7	6	5	4	3	2	1	0
Name	DMA_ADDR_0[15:0]															
Type	RW															
Reset	0	0	0	0	0	0	0	0	0	0	0	0	0	0	0	0

Bit(s)	Name	Description
31:0	DMA_ADDR_0	**32-bit DMA start address** Updated (increased) by USB2.0 controller automatically when multiple packet DMA (DMA Mode = 1) is used

© 2015 - 2017 MediaTek Inc.

This document contains information that is proprietary to MediaTek Inc. ("MediaTek") and/or its licensor(s).
Any unauthorized use, reproduction or disclosure of this document in whole or in part is strictly prohibited.

A0900200C **DMA_COUNT_0** **DMA Channel 0 Byte Count Register** **00000000**

Bit	31	30	29	28	27	26	25	24	23	22	21	20	19	18	17	16
Name									DMA_COUNT_0[23:16]							
Type									RW							
Reset									0	0	0	0	0	0	0	0
Bit	15	14	13	12	11	10	9	8	7	6	5	4	3	2	1	0
Name	DMA_COUNT_0[15:0]															
Type	RW															
Reset	0	0	0	0	0	0	0	0	0	0	0	0	0	0	0	0

Bit(s)	Name	Description
23:0	DMA_COUNT_0	**24-bit DMA transfer count with byte unit** Updated (decreased) by USB2.0 controller automatically when each packet is transferred.

A0900210 **DMA_LIMITER** **DMA Limiter Register** **00000000**

Bit	31	30	29	28	27	26	25	24	23	22	21	20	19	18	17	16
Name																
Type																
Reset																
Bit	15	14	13	12	11	10	9	8	7	6	5	4	3	2	1	0
Name									DMA_LIMITER							
Type									RW							
Reset									0	0	0	0	0	0	0	0

Bit(s)	Name	Description
7:0	DMA_LIMITER	**This register suppresses bus utilization of the DMA channel. The value is from 0 to 255. 0 means no limitation, and 255 means totally banned. The value between 0 and 255 means certain DMA can have permission to use AHB every (4 x n) AHB clock cycles.** Note: It is not recommended to limit the bus utilization of the DMA channels because this increases the latency of response to the masters, and the transfer rate will decrease. Before using it, programmers should make sure that the bus masters have some protective mechanism to avoid entering wrong states.

A0900214 **DMA_CNTL_1** **DMA Channel 1 Control Register** **0000**

Bit	15	14	13	12	11	10	9	8	7	6	5	4	3	2	1	0
Name			DMAABORT		DMACHEN	BURST_MODE		BUSERR	ENDPNT				INTEN	DMAMODE	DMADIR	DMAEN
Type			Ao		RU	RW		RU	RW				RW	RW	RW	Other
Reset			0		0	0	0	0	0	0	0	0	0	0	0	0

Bit(s)	Name	Description
13	DMAABORT	**If SW needs to abort the current DMA transfer, set DMAABORT=1 and DMAEN=0. After the transfer is aborted completely, DMA interrupt will occur.**
11	DMACHEN	**DMA channel enable monitor bit.**

© 2015 - 2017 MediaTek Inc.

This document contains information that is proprietary to MediaTek Inc. ("MediaTek") and/or its licensor(s).
Any unauthorized use, reproduction or disclosure of this document in whole or in part is strictly prohibited.

Bit(s)	Name	Description
10:9	BURST_MODE	2'b00: Burst Mode 0: Bursts of unspecified length 2'b01: Burst Mode 1: INCR4 or unspecified length 2'b10: Burst Mode 2: INCR8, INCR4 or unspecified length 2'b11: Burst Mode 3: INCR16, INCR8, INCR4 or unspecified length
8	BUSERR	**Bus error**
7:4	ENDPNT	**Endpoint which DMA will transfer with.**
3	INTEN	**Enables interrupt**
2	DMAMODE	**DMA mode**
1	DMADIR	**Direction** 0: DMA write (Rx endpoint) 1: DMA read (Tx endpoint)
0	DMAEN	**Enables DMA** The bit will be cleared when the DMA transfer is completed. Programmers should not disable DMA_en before the transfer is completed. If programmers disable dma_en during the transfer, DMA will not stop immediately until the last bus transfer is completed.

A0900218 **DMA_ADDR_1** **DMA Channel 1 Address Register** **00000000**

Bit	31	30	29	28	27	26	25	24	23	22	21	20	19	18	17	16
Name	DMA_ADDR_1[31:16]															
Type	RW															
Reset	0	0	0	0	0	0	0	0	0	0	0	0	0	0	0	0
Bit	15	14	13	12	11	10	9	8	7	6	5	4	3	2	1	0
Name	DMA_ADDR_1[15:0]															
Type	RW															
Reset	0	0	0	0	0	0	0	0	0	0	0	0	0	0	0	0

Bit(s)	Name	Description
31:0	DMA_ADDR_1	**32-bit DMA start address** Updated (increased) by USB2.0 controller automatically when multiple packet DMA (DMA Mode = 1) is used

A090021C **DMA_COUNT_1** **DMA Channel 1 Byte Count Register** **00000000**

Bit	31	30	29	28	27	26	25	24	23	22	21	20	19	18	17	16
Name									DMA_COUNT_1[23:16]							
Type									RW							
Reset									0	0	0	0	0	0	0	0
Bit	15	14	13	12	11	10	9	8	7	6	5	4	3	2	1	0
Name	DMA_COUNT_1[15:0]															
Type	RW															
Reset	0	0	0	0	0	0	0	0	0	0	0	0	0	0	0	0

Bit(s)	Name	Description
23:0	DMA_COUNT_1	**24-bit DMA transfer count with byte unit** Updated (decreased) by USB2.0 controller automatically when each packet is transferred.

© 2015 - 2017 MediaTek Inc.

This document contains information that is proprietary to MediaTek Inc. ("MediaTek") and/or its licensor(s).
Any unauthorized use, reproduction or disclosure of this document in whole or in part is strictly prohibited.

A0900220 **DMA_CONFIG** **DMA Configuration Register** **00000004**

Bit	31	30	29	28	27	26	25	24	23	22	21	20	19	18	17	16
Name																
Type																
Reset																
Bit	15	14	13	12	11	10	9	8	7	6	5	4	3	2	1	0
Name					DMA_ACTIVE_EN		AHB_HPROT_2_EN			DMAQ_CHAN_SEL					AHBWAIT_SEL	BOUNDARY_1K_CROSS_EN
Type					RW		RW			RW					RW	RW
Reset					0	0	0	0		0	0	0			0	0

Bit(s)	Name	Description
11:10	DMA_ACTIVE_EN	**The two bits control usb_active.** 2'b00: usb_active depends on all DMAEN of DMA channel control register. 2'b01: usb_active ties to 1. 2'b10: usb_active ties to 0. 2'b11: usb_active depends on ep_active, dma_active and all DMAEN of DMA channel control register (OR logic).
9:8	AHB_HPROT_2_EN	**The two bits control the AHB master interface HPROT2 function operating in non-bufferable/bufferable/last transfer non-bufferable mode.** 2'b00: All write transfers of a burst will be accessed by bufferable mode except for the last transfer of a burst. 2'b01: AHB master HPROT2 is always accessed by non-bufferable mode. 2'b10: AHB master HPROT2 is always accessed by bufferable mode. 2'b11: Reserved
6:4	DMAQ_CHAN_SEL	**Selects DMA channel used by USB_DMAQ if it is available** It will not affect if USB_DMAQ is not available.
1	AHBWAIT_SEL	**Selects AHBWAIT behavior** Set to 1 to return to old DMA master AHB wait condition. This bit is used to test DMA FIFO overflow bug.
0	BOUNDARY_1K_CROSS_EN	**Enables 1k boundary page crossing** Set to 1 to force burst transfer regardless of 1k boundary crossing. Note: This will violate AHB 1k boundary specification but gain some bus performance.

A0900224 **DMA_CNTL_2** **DMA Channel 2 Control Register** **0000**

Bit	15	14	13	12	11	10	9	8	7	6	5	4	3	2	1	0
Name			DMAABORT		DMACHEN	BURST_MODE		BUSERR	ENDPNT				INTEN	DMAMODE	DMADIR	DMAEN
Type			A0		RU	RW		RU	RW				RW	RW	RW	Other
Reset			0		0	0	0	0	0	0	0	0	0	0	0	0

Bit(s)	Name	Description
13	DMAABORT	**If SW needs to abort the current DMA transfer, set DMAABORT=1 and DMAEN=0. After the transfer is aborted completely, DMA**

This document contains information that is proprietary to MediaTek Inc. ("MediaTek") and/or its licensor(s).
Any unauthorized use, reproduction or disclosure of this document in whole or in part is strictly prohibited.

Bit(s)	Name	Description
		interrupt will occur.
11	DMACHEN	**DMA channel enable monitor bit**
10:9	BURST_MODE	2'b00: Burst Mode 0: Bursts of unspecified length 2'b01: Burst Mode 1: INCR4 or unspecified length 2'b10: Burst Mode 2: INCR8, INCR4 or unspecified length 2'b11: Burst Mode 3: INCR16, INCR8, INCR4 or unspecified length
8	BUSERR	**Bus error**
7:4	ENDPNT	**Endpoint which DMA will transfer with**
3	INTEN	**Enables interrupt**
2	DMAMODE	**DMA mode**
1	DMADIR	**Direction** 0: DMA write (Rx endpoint) 1: DMA read (Tx endpoint)
0	DMAEN	**Enables DMA** The bit will be cleared when the DMA transfer is completed. Programmers should not disable DMA_en before the transfer is completed. If programmers disable dma_en during the transfer, DMA will not stop immediately until the last bus transfer is completed.

A0900228 **DMA_ADDR_2** **DMA Channel 2 Address Register** **00000000**

Bit	31	30	29	28	27	26	25	24	23	22	21	20	19	18	17	16
Name	DMA_ADDR_2[31:16]															
Type	RW															
Reset	0	0	0	0	0	0	0	0	0	0	0	0	0	0	0	0
Bit	15	14	13	12	11	10	9	8	7	6	5	4	3	2	1	0
Name	DMA_ADDR_2[15:0]															
Type	RW															
Reset	0	0	0	0	0	0	0	0	0	0	0	0	0	0	0	0

Bit(s)	Name	Description
31:0	DMA_ADDR_2	**32-bit DMA start address** Updated (increased) by USB2.0 controller automatically when multiple packet DMA (DMA Mode = 1) is used

A090022C **DMA_COUNT_2** **DMA Channel 2 Byte Count Register** **00000000**

Bit	31	30	29	28	27	26	25	24	23	22	21	20	19	18	17	16
Name									DMA_COUNT_2[23:16]							
Type									RW							
Reset									0	0	0	0	0	0	0	0
Bit	15	14	13	12	11	10	9	8	7	6	5	4	3	2	1	0
Name	DMA_COUNT_2[15:0]															
Type	RW															
Reset	0	0	0	0	0	0	0	0	0	0	0	0	0	0	0	0

Bit(s)	Name	Description
23:0	DMA_COUNT_2	**24-bit DMA transfer count with byte unit** Updated (decreased) by USB2.0 controller automatically when each packet is transferred.

© 2015 - 2017 MediaTek Inc.

This document contains information that is proprietary to MediaTek Inc. ("MediaTek") and/or its licensor(s).
Any unauthorized use, reproduction or disclosure of this document in whole or in part is strictly prohibited.

A0900234 **DMA_CNTL_3** **DMA Channel 3 Control Register** **0000**

Bit	15	14	13	12	11	10	9	8	7	6	5	4	3	2	1	0
Name			DMAABORT		DMACHEN	BURST_MODE		BUSERR	ENDPNT				INTEN	DMAMODE	DMADIR	DMAEN
Type			A0		RU	RW		RU	RW				RW	RW	RW	Other
Reset			0		0	0	0	0	0	0	0	0	0	0	0	0

Bit(s)	Name	Description
13	DMAABORT	**If SW needs to abort the current DMA transfer, set DMAABORT=1 and DMAEN=0. After the transfer is aborted completely, DMA interrupt will occur.**
11	DMACHEN	**DMA channel enable monitor bit**
10:9	BURST_MODE	2'b00: Burst Mode 0: Bursts of unspecified length 2'b01: Burst Mode 1: INCR4 or unspecified length 2'b10: Burst Mode 2: INCR8, INCR4 or unspecified length 2'b11: Burst Mode 3: INCR16, INCR8, INCR4 or unspecified length
8	BUSERR	**Bus error**
7:4	ENDPNT	**Endpoint which DMA will transfer with**
3	INTEN	**Enables interrupt**
2	DMAMODE	**DMA mode**
1	DMADIR	**Direction** 0: DMA write (Rx endpoint) 1: DMA read (Tx endpoint)
0	DMAEN	**Enables DMA** The bit will be cleared when the DMA transfer is completed. Programmers should not disable DMA_en before the trnsfer is completed. If programmers disable dma_en during the transfer, DMA will not stop immediately until the last bus transfer is completed.

A0900238 **DMA_ADDR_3** **DMA Channel 3 Address Register** **00000000**

Bit	31	30	29	28	27	26	25	24	23	22	21	20	19	18	17	16
Name	DMA_ADDR_3[31:16]															
Type	RW															
Reset	0	0	0	0	0	0	0	0	0	0	0	0	0	0	0	0
Bit	15	14	13	12	11	10	9	8	7	6	5	4	3	2	1	0
Name	DMA_ADDR_3[15:0]															
Type	RW															
Reset	0	0	0	0	0	0	0	0	0	0	0	0	0	0	0	0

Bit(s)	Name	Description
31:0	DMA_ADDR_3	**32-bit DMA start address** Updated (increased) by USB2.0 controller automatically when multiple packet DMA (DMA Mode = 1) is used

© 2015 - 2017 MediaTek Inc.

This document contains information that is proprietary to MediaTek Inc. ("MediaTek") and/or its licensor(s).
Any unauthorized use, reproduction or disclosure of this document in whole or in part is strictly prohibited.

A090023C **DMA_COUNT_3** **DMA Channel 3 Byte Count Register** **00000000**

Bit	31	30	29	28	27	26	25	24	23	22	21	20	19	18	17	16
Name									DMA_COUNT_3[23:16]							
Type									RW							
Reset									0	0	0	0	0	0	0	0
Bit	15	14	13	12	11	10	9	8	7	6	5	4	3	2	1	0
Name	DMA_COUNT_3[15:0]															
Type	RW															
Reset	0	0	0	0	0	0	0	0	0	0	0	0	0	0	0	0

Bit(s)	Name	Description
23:0	DMA_COUNT_3	**24-bit DMA transfer count with byte unit** Updated (decreased) by USB2.0 controller automatically when each packet is transferred.

A0900304 **EP1RXPKTCOUNT** **EP1 RxPktCount Register** **0000**

Bit	15	14	13	12	11	10	9	8	7	6	5	4	3	2	1	0
Name	EP1RXPKTCOUNT															
Type	RW															
Reset	0	0	0	0	0	0	0	0	0	0	0	0	0	0	0	0

Bit(s)	Name	Description
15:0	EP1RXPKTCOUNT	**Sets up the number of packets of Rx Endpoint n size MaxP that are to be transferred in a block transfer** Only used in host mode when AutoReq is set. It has no effect in peripheral mode or when AutoReq is not set. RqPktCount (host mode only) For each Rx Endpoint 1 - 15, the USB2.0 controller provides a 16-bit RqPktCount register. This read/write register is used in host mode to specify the number of packets that are to be transferred in a block transfer of one or more bulk packets of length MaxP to Rx Endpoint n. The core uses the value recorded in this register to determine the number of requests to issue where the AutoReq option (included in the RxCSR register) has been set. Note: Multiple packets combined into a single bulk packet within the FIFO count as one packet.

A0900308 **EP2RXPKTCOUNT** **EP2 RxPktCount Register** **0000**

Bit	15	14	13	12	11	10	9	8	7	6	5	4	3	2	1	0
Name	EP2RXPKTCOUNT															
Type	RW															
Reset	0	0	0	0	0	0	0	0	0	0	0	0	0	0	0	0

Bit(s)	Name	Description
15:0	EP2RXPKTCOUNT	**Sets up the number of packets of Rx Endpoint n size MaxP that are to be transferred in a block transfer** Only used in host mode when AutoReq is set. It has no effect in peripheral mode or when AutoReq is not set. RqPktCount (host mode only) For each Rx Endpoint 1 - 15, the USB2.0 controller provides a 16-bit RqPktCount register. This read/write register is used in host mode to specify the number of packets that are to be transferred in a block transfer of one or more bulk packets of length MaxP to Rx Endpoint n. The core uses the value recorded in this register to determine the number of requests

© 2015 - 2017 MediaTek Inc.

This document contains information that is proprietary to MediaTek Inc. ("MediaTek") and/or its licensor(s).
Any unauthorized use, reproduction or disclosure of this document in whole or in part is strictly prohibited.

Bit(s)	Name	Description
		to issue where the AutoReq option (included in the RxCSR register) has been set. Note: Multiple packets combined into a single bulk packet within the FIFO count as one packet.

A0900604 **TM1** **Test Mode 1 Register** **0000**

Bit	15	14	13	12	11	10	9	8	7	6	5	4	3	2	1	0
Name																TM1
Type																RW
Reset																0

Bit(s)	Name	Description
0	TM1	**USB IP internal TM1.**

A0900608 **HWVER_DATE** **HW Version Control Register** **20121214**

Bit	31	30	29	28	27	26	25	24	23	22	21	20	19	18	17	16
Name	HWVER_DATE[31:16]															
Type	DC															
Reset	0	0	1	0	0	0	0	0	0	0	0	1	0	0	1	0
Bit	15	14	13	12	11	10	9	8	7	6	5	4	3	2	1	0
Name	HWVER_DATE[15:0]															
Type	DC															
Reset	0	0	0	1	0	0	1	0	0	0	0	1	0	1	0	0

Bit(s)	Name	Description
31:0	HWVER_DATE	**Hardware version control register date format** 32'hYYYYMMDD

A0900684 **SRAMA** **SRAM Address Register** **00000000**

Bit	31	30	29	28	27	26	25	24	23	22	21	20	19	18	17	16
Name															EP0_StartAd_TM6_en	SRAMDBG
Type															RW	RW
Reset															0	0
Bit	15	14	13	12	11	10	9	8	7	6	5	4	3	2	1	0
Name	SRAMA															
Type	RW															
Reset	0	0	0	0	0	0	0	0	0	0	0	0	0	0	0	0

Bit(s)	Name	Description
17	EP0_StartAd_TM6_en	Software can enable this bit to change the EP0 FIFO start address for test mode 6 FIFO loopback test by DMA/PIO.
16	SRAMDBG	**SRAM_DEBUG_MODE** Software can read the data in SRAM of USB core when this bit is enabled. The related registers are SRAMA, SRAMD. After setting this bit to 1, software can set

This document contains information that is proprietary to MediaTek Inc. ("MediaTek") and/or its licensor(s).
Any unauthorized use, reproduction or disclosure of this document in whole or in part is strictly prohibited.

Bit(s)	Name	Description
15:0	SRAMA	up SRAMA (SRAM address) then read the data in register SRAMD (SRAM data). This is for debugging mode only and should be disabled in normal operation. 1'b0: Software set this bit 0 to disable SRAM_DEBUG_MODE. 1'b1: Software set this bit 1 to enable SRAM_DEBUG_MODE. **SRAM_ADDRESS** The register is used for RISC to read data from USB SRAM. The unit is 4 bytes. For example, to check 0x400 byte address, set this register to 0x100. This register is only available when the register bit SRAM_DEBUG_MODE of register SRAMDBG is set to 1. When SRAM ADDRESS is set, SRAM DATA will display the data in the address SRAM ADDRESS in SRAM. It is for debugging mode only.

A0900688 **SRAMD** **SRAM Data Register** **00000000**

Bit	31	30	29	28	27	26	25	24	23	22	21	20	19	18	17	16
Name	SRAMDATA[31:16]															
Type	RU															
Reset	0	0	0	0	0	0	0	0	0	0	0	0	0	0	0	0
Bit	15	14	13	12	11	10	9	8	7	6	5	4	3	2	1	0
Name	SRAMDATA[15:0]															
Type	RU															
Reset	0	0	0	0	0	0	0	0	0	0	0	0	0	0	0	0

Bit(s)	Name	Description
31:0	SRAMDATA	**SRAM_DATA** The register is used for RISC to read data from USB SRAM. This register is only available when the register bit SRAM_DEBUG_MODE of register SRAMDBG is set to 1. When SRAM ADDRESS is set, SRAM DATA will display the data in the address SRAM ADDRESS in SRAM. It is for debugging mode only.

A0900690 **RISC_SIZE** **RISC Size Register** **00000002**

Bit	31	30	29	28	27	26	25	24	23	22	21	20	19	18	17	16
Name																
Type																
Reset																
Bit	15	14	13	12	11	10	9	8	7	6	5	4	3	2	1	0
Name															RISC_SIZE	
Type															RW	
Reset															1	0

Bit(s)	Name	Description
1:0	RISC_SIZE	**Configures RISC wrapper access size** 2'b00: 8-bit byte access 2'b01: 16-bit half word access 2'b10: 32-bit word access 2'b11: Reserved

© 2015 - 2017 MediaTek Inc.

This document contains information that is proprietary to MediaTek Inc. ("MediaTek") and/or its licensor(s).
Any unauthorized use, reproduction or disclosure of this document in whole or in part is strictly prohibited.

A0900700 RESREG Reserved Register FFFF0000

Bit	31	30	29	28	27	26	25	24	23	22	21	20	19	18	17	16
Name	RESERVEDH												MAC_CG_DIS	USB_CG_DIS	DMA_CG_DIS	MCU_CG_DIS
Type	RW												RW	RW	RW	RW
Reset	1	1	1	1	1	1	1	1	1	1	1	1	1	1	1	1
Bit	15	14	13	12	11	10	9	8	7	6	5	4	3	2	1	0
Name	RESERVEDL															HSTPWRDWN_OPT
Type	RW															RW
Reset	0	0	0	0	0	0	0	0	0	0	0	0	0	0	0	0

Bit(s)	Name	Description
19	MAC_CG_DIS	**Disables USB MAC clock gate to enhance dynamic power**
18	USB_CG_DIS	**Disables USB clock gate**
17	DMA_CG_DIS	**Disables DMA clock gate**
16	MCU_CG_DIS	**Disables MCU clock gate**
0	HSTPWRDWN_OPT	**Host mode device connection detection option** 0: Disable 1: Enable the detection of device connection when MAC clock is off and drive powerdwn wakeup signal to wake up the system

A0900730 OTG20_CSRL OTG20 Related Control Register L 00

Bit	15	14	13	12	11	10	9	8	7	6	5	4	3	2	1	0
Name									DIS_HSUS	EN_A_HFS_WHNP	DIS_B_WTDIS	EN_HHS_SUSP_DIS	DIS_CHARGE_VBUS	EN_HSUS_RESUME_INT	EN_HSUS_RESUME	OTG20_EN
Type									RW	RW	RW	RW	RW	RW	RW	RW
Reset									0	0	0	0	0	0	0	0

Bit(s)	Name	Description
7	DIS_HSUS	**Disables host mode entering C_OPM_HSUS state before entering suspend** Suggested: 1'b1 0: Host mode enters C_OPM_HSUS state before entering suspend. 1: Disable host mode entering C_OPM_HSUS state before entering suspend.
6	EN_A_HFS_WHNP	**If this bit is enabled, FS idle of A device will transfer to HFS_HSUS state first.** Suggested: 1'b1 in all modes (device/host/OTG) 0: FS idle of A device will not transfer to HFS_HSUS state first. 1: FS idle of A device will transfer to HFS_HSUS state first.
5	DIS_B_WTDIS	**Disables B device entering C_OPM_B_WTDIS states before switching to host mode** Suggested: 1'b1

© 2015 - 2017 MediaTek Inc.

This document contains information that is proprietary to MediaTek Inc. ("MediaTek") and/or its licensor(s).
Any unauthorized use, reproduction or disclosure of this document in whole or in part is strictly prohibited.

Bit(s)	Name	Description
		0: B device enters C_OPM_B_WTDIS states before switching to host mode. 1: B device does not enter C_OPM_B_WTDIS states before switching to host mode.
4	EN_HHS_SUSP_DIS	**Enables host-hs-suspend entering OPM_FS_WTCON state first while receiving disconnect signal** Suggested: 1'b1 in all modes (device/host/OTG) 0: The host mode enters fs_normal mode directly when the device receives the disconnect signal as suspend state in all states. 1: The host mode enters OPM_FS_WTCON mode first when the device receives the disconnect signal as suspend state in all states.
3	DIS_CHARGE_VBUS	**Disables B device charging VBUS function for OTG2.0 feature** 0: B device charges VBUS when B device initiates the SRP protocol. This mode makes compatible the OTG1.3 related SRP flow. 1: B device does not charge VBUS when B device initiates the SRP protocol. This mode is for satisfying the OTG2.0 protocol.
2	EN_HSUS_RESUME_INT	**Enables hsus mode of host initializing resuming interrupt while receiving resume K as waiting for HNP** Suggested: 1'b1 for OTG2.0 mode 0: Suspend mode of host does not initialize resuming interrupt as receiving resume K while host is waiting for HNP protocol in OTG20 mode. 1: Suspend mode of host initializes resuming interrupt as receiving resume K while host is waiting for HNP protocol in OTG20 mode.
1	EN_HSUS_RESUME	**Enables hnpsus-mode of host entering host-normal mode as receiving resume K while waiting for HNP** Suggested: 1'b0 when USB works in OTG20 mode 0: hnpsus-mode of host stays in hnpsus-mode as receiving resume K while waiting for HNP. 1: hnpsus-mode of host enters host-normal mode as receiving resume K while waiting for HNP.
0	OTG20_EN	**Enables OTG 2.0 feature** 0: Disable OTG2.0 feature; default OTG1.3 mode. 1: Enable USB OTG20 feature

A0900731 **OTG20_CSRH** **OTG20 Related Control Register H** **00**

Bit	15	14	13	12	11	10	9	8	7	6	5	4	3	2	1	0
Name															DIS_AUTORST	EN_CON_DEB_SHORT
Type															RW	RW
Reset															0	0

Bit(s)	Name	Description
1	DIS_AUTORST	**Informs whether HW sends bus reset automatically when B-device changes to host with HNP** 0: HW sends bus reset automatically when B-device changes to host with HNP. 1: HW does not send bus reset when B-device changes to host mode. SW should set up the reset bit for sending bus reset. The bit is added for OTG20 compliance test.
0	EN_CON_DEB_SHORT	**Enable this bit to decrease A device connection denounce waiting timing.** Suggested: 1'b1

© 2015 - 2017 MediaTek Inc.
This document contains information that is proprietary to MediaTek Inc. ("MediaTek") and/or its licensor(s).
Any unauthorized use, reproduction or disclosure of this document in whole or in part is strictly prohibited.

Bit(s)	Name	Description
		0: A device connection without denounce waiting timing 1: Decrease A device connection denounce waiting timing

© 2015 - 2017 MediaTek Inc.

This document contains information that is proprietary to MediaTek Inc. (“MediaTek”) and/or its licensor(s).
Any unauthorized use, reproduction or disclosure of this document in whole or in part is strictly prohibited.

12. General Purpose Timer

12.1. Introduction

The GPT includes five 32-bit timers and one 64-bit timer. Each timer has four operation modes, which are ONE-SHOT, REPEAT, freerun with interrupt (FREERUN_I), and FREERUN, and can operate on one of the two clock sources, RTC clock (32.768kHz) and system clock (13MHz).

GPT is an always on IP. When the system is in sleep or deep sleep mode, it still keeps the previous configuration and keeps working. However, there is no 13MHz clock source in deep sleep mode; users need to switch clock source to 32kHz, which sets GPT*_CLK[4] to 1'b1.

12.1.1. Features

The four operation modes for GPT are ONE-SHOT, REPEAT, FREERUN_I and FREERUN. See Table 12-1 for the functions of each mode.

Table 12-1. Operation mode of GPT

Mode	Auto Stop	Interrupt	Increases when EN=1 and …	When COUNTn = COMPAREn	Example: Compare is set to 2 **Bold means interrupt*
ONE-SHOT	Yes	Yes	Stops when COUNTn = COMPAREn	EN is reset to 0.	0,1,2,2,2,2,2,2,2,2,2,2,…
REPEAT	No	Yes		Count is reset to 0.	0,1,2,0,1,2,0,1,2,0,1,2…
FREERUN_I	No	Yes	Reset to 0 when overflow		0,1,2,3,4,5,6,7,8,9,10,…
FREERUN	No	No	Reset to 0 when overflow		0,1,2,3,4,5,6,7,8,9,10,…

Each timer can be programmed to select the clock source, RTC clock (32.76kHz) or system clock (13MHz). After the clock source is determined, the division ratio of the selected clock can be programmed. The division ratio can be fine-granulated as 1, 2, 3, 4 to 13 and coarse-granulated as 16, 32 and 64.

Table 12-2. Timer feature

Timer	Resolution	Interrupt	Prescalor	Mode	Clock
GPT1– GPT5	32-bit	Yes	1-13, 16, 32, 64	ONE-SHOT/ REPEAT / FREERUN_I /FREERUN	32KHz/ 13MHz
GPT6	64-bit	Yes	1-13, 16, 32, 64	ONE-SHOT/ REPEAT / FREERUN_I /FREERUN	32KHz/ 13MHz

© 2015 - 2017 MediaTek Inc.

This document contains information that is proprietary to MediaTek Inc. ("MediaTek") and/or its licensor(s).
Any unauthorized use, reproduction or disclosure of this document in whole or in part is strictly prohibited.

12.1.2. Block Diagram

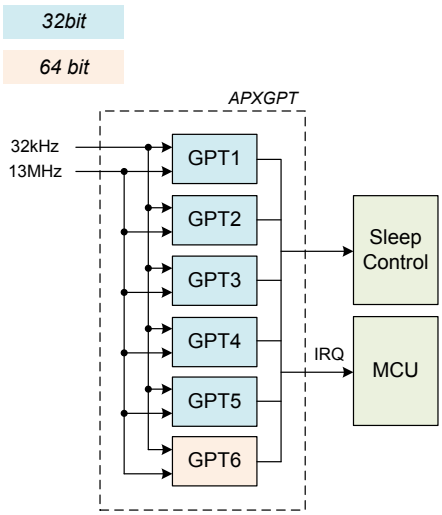

Figure 12-1. Block diagram of GPT

12.1.3. Programming Guide

To program and use GPT, note that:

- The counter value can be read any time even when the clock source is RTC clock.
- The compare value can be programmed any time.

Sequence flow:

- Turn off GPT clock.
- Set up GPT clock source and frequency divider.
- Turn on GPT clock.
- Enable/disable IRQ and IRQ mask.
- Set up compare value.
- Set up GPT mode.
- Enable GPT.

For the GPT6 64-bit timer, the read operation of the 64-bit timer value will be separated into two APB reads since an APB read is of 32-bit width. To perform the read of 64-bit timer value, the lower word should be read first then the higher word. The read operation of lower word freezes the “read value” of the higher word but does not freeze the timer counting. This ensures that the separated read operation acquires the correct timer value. If both two tasks, e.g. task A and task B, perform the read of 64-bit timer value, task A first reads the lower word of the value, and task B reads the lower word of the value. Either of the tasks reads the higher word of timer value, and the obtained value will be the time when task B reads the lower word of timer value. To guarantee task A reads the correct 64-bit timer value, some software procedures are required, e.g. the semaphore.

© 2015 - 2017 MediaTek Inc.

This document contains information that is proprietary to MediaTek Inc. (“MediaTek”) and/or its licensor(s).
Any unauthorized use, reproduction or disclosure of this document in whole or in part is strictly prohibited.

12.2. Register Definition

Module name: GPT Base address: (+A2140000h)

Address	Name	Width	Register Function
A2140000	GPT_IRQSTA	32	**GPT IRQ Status** Shows the interrupt status of each GPT
A2140004	GPT_IRQMASK0	32	**ARM IRQMASK Register** Masks specific GPT's interrupt to ARM
A2140008	GPT_IRQMASK1	32	**CM4 IRQMASK Register** Masks specific GPT's interrupt to CM4
A2140010	GPT1_CON	32	**GPT1 Control** The General control for GPT1
A2140014	GPT1_CLK	32	**GPT1 Clock Setting** Controls the clock source and division ratio of GPT clock
A2140018	GPT1_IRQ_EN	32	**GPT IRQ Enabling** Controls the enabling/disabling of GPT interrupt
A214001C	GPT1_IRQ_STA	32	**GPT IRQ Status** Shows the interrupt status of GPT1
A2140020	GPT1_IRQ_ACK	32	**GPT IRQ Acknowledgement** Acknowledges the GPT interrupt
A2140024	GPT1_COUNT	32	**GPT1 Counter** Timer count of GPT1
A2140028	GPT1_COMPARE	32	**GPT1 Compare Value** Compare value for GPT1
A2140040	GPT2_CON	32	**GPT2 Control** General control for GPT2
A2140044	GPT2_CLK	32	**GPT2 Clock Setting** Controls the clock source and division ratio of GPT clock
A2140048	GPT2_IRQ_EN	32	**GPT IRQ Enabling** Controls the enabling/disabling of GPT interrupt
A214004C	GPT2_IRQ_STA	32	**GPT IRQ Status** Shows the interrupt status of GPT1
A2140050	GPT2_IRQ_ACK	32	**GPT IRQ Acknowledgement** Acknowledges the GPT interrupt
A2140054	GPT2_COUNT	32	**GPT2 Counter** Timer count of GPT2
A2140058	GPT2_COMPARE	32	**GPT2 Compare Value** Compare value for GPT2
A2140070	GPT3_CON	32	**GPT3 Control** General control for GPT3
A2140074	GPT3_CLK	32	**GPT3 Clock Setting** Controls the clock source and division ratio of GPT clock
A2140078	GPT3_IRQ_EN	32	**GPT IRQ Enabling** Controls the enabling/disabling of GPT interrupt
A214007C	GPT3_IRQ_STA	32	**GPT IRQ Status** Shows the interrupt status of GPT1
A2140080	GPT3_IRQ_ACK	32	**GPT IRQ Acknowledgement** Acknowledges the GPT interrupt
A2140084	GPT3_COUNT	32	**GPT3 Counter** Timer count of GPT3
A2140088	GPT3_COMPARE	32	**GPT3 Compare Value**

© 2015 - 2017 MediaTek Inc.

This document contains information that is proprietary to MediaTek Inc. ("MediaTek") and/or its licensor(s).
Any unauthorized use, reproduction or disclosure of this document in whole or in part is strictly prohibited.

			Compare value for GPT3
A21400A0	GPT4_CON	32	**GPT4 Control** General control for GPT4
A21400A4	GPT4_CLK	32	**GPT4 Clock Setting** Controls the clock source and division ratio of GPT clock
A21400A8	GPT4_IRQ_EN	32	**GPT IRQ Enabling** Controls the enabling/disabling of GPT interrupt
A21400AC	GPT4_IRQ_STA	32	**GPT IRQ Status** Shows the interrupt status of GPT1
A21400B0	GPT4_IRQ_ACK	32	**GPT IRQ Acknowledgement** Acknowledges the GPT interrupt
A21400B4	GPT4_COUNT	32	**GPT4 Counter** Timer count of GPT4
A21400B8	GPT4_COMPARE	32	**GPT4 Compare Value** Compare value for GPT4
A21400D0	GPT5_CON	32	**GPT5 Control** General control for GPT5
A21400D4	GPT5_CLK	32	**GPT5 Clock Setting** Controls the clock source and division ratio of GPT clock
A21400D8	GPT5_IRQ_EN	32	**GPT IRQ Enabling** Controls the enabling/disabling of GPT interrupt
A21400DC	GPT5_IRQ_STA	32	**GPT IRQ Status** Shows the interrupt status of GPT1
A21400E0	GPT5_IRQ_ACK	32	**GPT IRQ Acknowledgement** Acknowledges the GPT interrupt
A21400E4	GPT5_COUNT	32	**GPT5 Counter** Timer count of GPT5
A21400E8	GPT5_COMPARE	32	**GPT5 Compare Value** Compare value for GPT5
A2140100	GPT6_CON	32	**GPT6 Control** General control for GPT6
A2140104	GPT6_CLK	32	**GPT6 Clock Setting** Controls the clock source and division ratio of GPT clock
A2140108	GPT6_IRQ_EN	32	**GPT IRQ Enabling** Controls the enabling/disabling of GPT interrupt
A214010C	GPT6_IRQ_STA	32	**GPT IRQ Status** Shows the interrupt status of GPT1
A2140110	GPT6_IRQ_ACK	32	**GPT IRQ Acknowledgement** Acknowledges the GPT interrupt
A2140114	GPT6_COUNTL	32	**GPT6 Counter L** Lower word timer count for GPT6
A2140118	GPT6_COMPAREL	32	**GPT6 Compare Value L** Lower word compare value for GPT6
A214011C	GPT6_COUNTH	32	**GPT6 Counter L** Higher word timer count for GPT6
A2140120	GPT6_COMPAREH	32	**GPT6 Compare Value H** Higher word compare value for GPT6

A2140000 GPT_IRQSTA GPT IRQ Status 00000000

Bit	31	30	29	28	27	26	25	24	23	22	21	20	19	18	17	16
Name																
Type																
Reset																

© 2015 - 2017 MediaTek Inc.

This document contains information that is proprietary to MediaTek Inc. ("MediaTek") and/or its licensor(s).
Any unauthorized use, reproduction or disclosure of this document in whole or in part is strictly prohibited.

Bit	15	14	13	12	11	10	9	8	7	6	5	4	3	2	1	0
Name											IRQSTA					
Type											RO					
Reset											0	0	0	0	0	0

Overview Shows the interrupt status of each GPT

Bit(s)	Name	Description
5:0	IRQSTA	**Interrupt status of each GPT** 0: No associated interrupt is generated 1: Associated interrupt is pending and waiting for service.

A2140004 GPT_IRQMASK0 ARM IRQMASK Register 0000003F

Bit	31	30	29	28	27	26	25	24	23	22	21	20	19	18	17	16
Name																
Type																
Reset																
Bit	15	14	13	12	11	10	9	8	7	6	5	4	3	2	1	0
Name											IRQ_MSK0					
Type											RW					
Reset											1	1	1	1	1	1

Overview Masks specific GPT's interrupt to ARM

Bit(s)	Name	Description
5:0	IRQ_MSK0	**By default, ARM will not receive GPT3's interrupt.**

A2140008 GPT_IRQMASK1 CM4 IRQMASK Register 0000003F

Bit	31	30	29	28	27	26	25	24	23	22	21	20	19	18	17	16
Name																
Type																
Reset																
Bit	15	14	13	12	11	10	9	8	7	6	5	4	3	2	1	0
Name											IRQ_MSK1					
Type											RW					
Reset											1	1	1	1	1	1

Overview Masks specific GPT's interrupt to CM4

Bit(s)	Name	Description
5:0	IRQ_MSK1	**By default, CM4 will only receive GPT3's interrupt.**

A2140010 GPT1_CON GPT1 Control 00000000

Bit	31	30	29	28	27	26	25	24	23	22	21	20	19	18	17	16
Name																
Type																
Reset																
Bit	15	14	13	12	11	10	9	8	7	6	5	4	3	2	1	0
Name										SW_CG1	MODE1				CLR1	EN1
Type										RW	RW				WO	RW
Reset										0	0	0			0	0

© 2015 - 2017 MediaTek Inc.

This document contains information that is proprietary to MediaTek Inc. ("MediaTek") and/or its licensor(s).
Any unauthorized use, reproduction or disclosure of this document in whole or in part is strictly prohibited.

Overview The General control for GPT1

Bit(s)	Name	Description
6	SW_CG1	**Stop GPT1's clock if this bit is enabled.** 0: Disable 1: Enable
5:4	MODE1	**Operation mode of GPT1** 00: ONE-SHOT mode 01: REPEAT mode 10: FREERUN_I mode 11: FREERUN mode
1	CLR1	**Clears the counter of GPT1 to 0** 0: No effect 1: Clear It takes 2~3 T GPT1_CK for CLR1 to clear the counter of GPT1.
0	EN1	**Enables GPT1** 0: Disable 1: Enable It takes 2~3 T GPT1_CK for EN1 to enable/disable GPT1.

A2140014 GPT1_CLK GPT1 Clock Setting 00000000

Bit	31	30	29	28	27	26	25	24	23	22	21	20	19	18	17	16
Name																
Type																
Reset																
Bit	15	14	13	12	11	10	9	8	7	6	5	4	3	2	1	0
Name												CLK1	CLKDIV1			
Type												RW	RW			
Reset												0	0	0	0	0

Overview Controls the clock source and division ratio of GPT clock

Bit(s)	Name	Description
4	CLK1	**Sets up clock source of GPT1** 0: System clock (13MHz) 1: RTC clock (32kHz)
3:0	CLKDIV1	**Setting of GPT1 input clock frequency divider** 0000: Clock source divided by 1 0001: Clock source divided by 2 0010: Clock source divided by 3 0011: Clock source divided by 4 0100: Clock source divided by 5 0101: Clock source divided by 6 0110: Clock source divided by 7 0111: Clock source divided by 8 1000: Clock source divided by 9 1001: Clock source divided by 10 1010: Clock source divided by 11 1011: Clock source divided by 12 1100: Clock source divided by 13 1101: Clock source divided by 16 1110: Clock source divided by 32 1111: Clock source divided by 64

© 2015 - 2017 MediaTek Inc.

This document contains information that is proprietary to MediaTek Inc. ("MediaTek") and/or its licensor(s).
Any unauthorized use, reproduction or disclosure of this document in whole or in part is strictly prohibited.

A2140018 GPT1_IRQ_EN GPT IRQ Enabling 00000000

Bit	31	30	29	28	27	26	25	24	23	22	21	20	19	18	17	16
Name																
Type																
Reset																
Bit	15	14	13	12	11	10	9	8	7	6	5	4	3	2	1	0
Name																IRQEN
Type																RW
Reset																0

Overview Controls the enabling/disabling of GPT interrupt

Bit(s)	Name	Description
0	IRQEN	**Enables interrupt of GPT1** 0: Disable interrupt of GPT1 1: Enable interrupt of GPT1

A214001C GPT1_IRQ_STA GPT IRQ Status 00000000

Bit	31	30	29	28	27	26	25	24	23	22	21	20	19	18	17	16
Name																
Type																
Reset																
Bit	15	14	13	12	11	10	9	8	7	6	5	4	3	2	1	0
Name																IRQSTA
Type																RO
Reset																0

Overview Shows the interrupt status of GPT1

Bit(s)	Name	Description
0	IRQSTA	**Interrupt status of GPT1** 0: No interrupt is generated from GPT1 1: GPT1's interrupt is pending and waiting for service.

A2140020 GPT1_IRQ_ACK GPT IRQ Acknowledgement 00000000

Bit	31	30	29	28	27	26	25	24	23	22	21	20	19	18	17	16
Name																
Type																
Reset																
Bit	15	14	13	12	11	10	9	8	7	6	5	4	3	2	1	0
Name																IRQACK
Type																WO
Reset																0

Overview Acknowledges the GPT interrupt

Bit(s)	Name	Description
0	IRQACK	**Interrupt acknowledgement for GPT1** 0: No effect 1: Associated interrupt request is acknowledged and should be relinquished.

© 2015 - 2017 MediaTek Inc.

This document contains information that is proprietary to MediaTek Inc. ("MediaTek") and/or its licensor(s).
Any unauthorized use, reproduction or disclosure of this document in whole or in part is strictly prohibited.

A2140024 GPT1_COUNT GPT1 Counter 00000000

Bit	31	30	29	28	27	26	25	24	23	22	21	20	19	18	17	16
Name	COUNTER1[31:16]															
Type	RO															
Reset	0	0	0	0	0	0	0	0	0	0	0	0	0	0	0	0
Bit	15	14	13	12	11	10	9	8	7	6	5	4	3	2	1	0
Name	COUNTER1[15:0]															
Type	RO															
Reset	0	0	0	0	0	0	0	0	0	0	0	0	0	0	0	0

Overview Timer count of GPT1

Bit(s)	Name	Description
31:0	COUNTER1	**Timer counter of GPT1**

A2140028 GPT1_COMPARE GPT1 Compare Value 00000000

Bit	31	30	29	28	27	26	25	24	23	22	21	20	19	18	17	16
Name	COMPARE1[31:16]															
Type	RW															
Reset	0	0	0	0	0	0	0	0	0	0	0	0	0	0	0	0
Bit	15	14	13	12	11	10	9	8	7	6	5	4	3	2	1	0
Name	COMPARE1[15:0]															
Type	RW															
Reset	0	0	0	0	0	0	0	0	0	0	0	0	0	0	0	0

Overview Compare value for GPT1

Bit(s)	Name	Description
31:0	COMPARE1	**Compare value of GPT1** Write new compare value will also clear the counter of GPT1.

A2140040 GPT2_CON GPT2 Control 00000000

Bit	31	30	29	28	27	26	25	24	23	22	21	20	19	18	17	16
Name																
Type																
Reset																
Bit	15	14	13	12	11	10	9	8	7	6	5	4	3	2	1	0
Name										SW_CG2	MODE2				CLR2	EN2
Type										RW	RW				WO	RW
Reset										0	0	0			0	0

Overview General control for GPT2

Bit(s)	Name	Description
6	SW_CG2	**Stop GPT2's clock if this bit is enabled.** 0: Disable 1: Enable
5:4	MODE2	**Operation mode of GPT2** 00: ONE-SHOT mode 01: REPEAT mode

This document contains information that is proprietary to MediaTek Inc. ("MediaTek") and/or its licensor(s).
Any unauthorized use, reproduction or disclosure of this document in whole or in part is strictly prohibited.

Bit(s)	Name	Description
		10: FREERUN_I mode 11: FREERUN mode
1	CLR2	**Clears the counter of GPT2 to 0** 0: No effect 1: Clear It takes 2~3 T GPT2_CK for CLR2 to clear the counter of GPT2.
0	EN2	**Enables GPT2** 0: Disable 1: Enable It takes 2~3 T GPT2_CK for EN2 to enable/disable GPT2.

A2140044 GPT2_CLK GPT2 Clock Setting 00000000

Bit	31	30	29	28	27	26	25	24	23	22	21	20	19	18	17	16
Name																
Type																
Reset																
Bit	15	14	13	12	11	10	9	8	7	6	5	4	3	2	1	0
Name												CLK2	CLKDIV2			
Type												RW	RW			
Reset												0	0	0	0	0

Overview Controls the clock source and division ratio of GPT clock

Bit(s)	Name	Description
4	CLK2	**Sets up clock source of GPT2** 0: System clock (13MHz) 1: RTC clock (32kHz)
3:0	CLKDIV2	**Setting of GPT2 input clock frequency divider** 0000: Clock source divided by 1 0001: Clock source divided by 2 0010: Clock source divided by 3 0011: Clock source divided by 4 0100: Clock source divided by 5 0101: Clock source divided by 6 0110: Clock source divided by 7 0111: Clock source divided by 8 1000: Clock source divided by 9 1001: Clock source divided by 10 1010: Clock source divided by 11 1011: Clock source divided by 12 1100: Clock source divided by 13 1101: Clock source divided by 16 1110: Clock source divided by 32 1111: Clock source divided by 64

A2140048 GPT2_IRQ_EN GPT IRQ Enabling 00000000

Bit	31	30	29	28	27	26	25	24	23	22	21	20	19	18	17	16
Name																
Type																
Reset																
Bit	15	14	13	12	11	10	9	8	7	6	5	4	3	2	1	0
Name																IRQEN
Type																RW
Reset																0

This document contains information that is proprietary to MediaTek Inc. ("MediaTek") and/or its licensor(s).
Any unauthorized use, reproduction or disclosure of this document in whole or in part is strictly prohibited.

Overview Controls the enabling/disabling of GPT interrupt

Bit(s)	Name	Description
0	IRQEN	**Enables interrupt of GPT2** 0: Disable interrupt of GPT2 1: Enable interrupt of GPT2

A214004C GPT2_IRQ_STA GPT IRQ Status 00000000

Bit	31	30	29	28	27	26	25	24	23	22	21	20	19	18	17	16
Name																
Type																
Reset																
Bit	15	14	13	12	11	10	9	8	7	6	5	4	3	2	1	0
Name																IRQSTA
Type																RO
Reset																0

Overview Shows the interrupt status of GPT1

Bit(s)	Name	Description
0	IRQSTA	**Interrupt status of GPT2** 0: No interrupt is generated from GPT2 1: GPT2's interrupt is pending and waiting for service.

A2140050 GPT2_IRQ_ACK GPT IRQ Acknowledgement 00000000

Bit	31	30	29	28	27	26	25	24	23	22	21	20	19	18	17	16
Name																
Type																
Reset																
Bit	15	14	13	12	11	10	9	8	7	6	5	4	3	2	1	0
Name																IRQACK
Type																WO
Reset																0

Overview Acknowledges the GPT interrupt

Bit(s)	Name	Description
0	IRQACK	**Interrupt acknowledgement for GPT2** 0: No effect 1: Associated interrupt request is acknowledged and should be relinquished.

A2140054 GPT2_COUNT GPT2 Counter 00000000

Bit	31	30	29	28	27	26	25	24	23	22	21	20	19	18	17	16
Name	COUNTER2[31:16]															
Type	RO															
Reset	0	0	0	0	0	0	0	0	0	0	0	0	0	0	0	0
Bit	15	14	13	12	11	10	9	8	7	6	5	4	3	2	1	0
Name	COUNTER2[15:0]															
Type	RO															
Reset	0	0	0	0	0	0	0	0	0	0	0	0	0	0	0	0

© 2015 - 2017 MediaTek Inc.

This document contains information that is proprietary to MediaTek Inc. ("MediaTek") and/or its licensor(s).
Any unauthorized use, reproduction or disclosure of this document in whole or in part is strictly prohibited.

Overview Timer count of GPT2

Bit(s)	Name	Description
31:0	COUNTER2	**Timer counter of GPT2**

A2140058 GPT2_COMPARE GPT2 Compare Value 00000000

Bit	31	30	29	28	27	26	25	24	23	22	21	20	19	18	17	16
Name	COMPARE2[31:16]															
Type	RW															
Reset	0	0	0	0	0	0	0	0	0	0	0	0	0	0	0	0
Bit	15	14	13	12	11	10	9	8	7	6	5	4	3	2	1	0
Name	COMPARE2[15:0]															
Type	RW															
Reset	0	0	0	0	0	0	0	0	0	0	0	0	0	0	0	0

Overview Compare value for GPT2

Bit(s)	Name	Description
31:0	COMPARE2	**Compare value of GPT2** Write new compare value will also clear the counter of GPT2.

A2140070 GPT3_CON GPT3 Control 00000000

Bit	31	30	29	28	27	26	25	24	23	22	21	20	19	18	17	16
Name																
Type																
Reset																
Bit	15	14	13	12	11	10	9	8	7	6	5	4	3	2	1	0
Name										SW_CG3	MODE3				CLR3	EN3
Type										RW	RW				WO	RW
Reset										0	0	0			0	0

Overview General control for GPT3

Bit(s)	Name	Description
6	SW_CG3	**Stop GPT3's clock if this bit is enabled.** 0: Disable 1: Enable
5:4	MODE3	**Operation mode of GPT3** 00: ONE-SHOT mode 01: REPEAT mode 10: FREERUN_I mode 11: FREERUN mode
1	CLR3	**Clears the counter of GPT3 to 0** 0: No effect 1: Clear It takes 2~3 T GPT3_CK for CLR3 to clear the counter of GPT3.
0	EN3	**Enables GPT3** 0: Disable 1: Enable It takes 2~3 T GPT3_CK for EN3 to enable/disable GPT3.

© 2015 - 2017 MediaTek Inc.

This document contains information that is proprietary to MediaTek Inc. ("MediaTek") and/or its licensor(s).
Any unauthorized use, reproduction or disclosure of this document in whole or in part is strictly prohibited.

A2140074 GPT3_CLK GPT3 Clock Setting 00000000

Bit	31	30	29	28	27	26	25	24	23	22	21	20	19	18	17	16
Name																
Type																
Reset																
Bit	15	14	13	12	11	10	9	8	7	6	5	4	3	2	1	0
Name												CLK3	CLKDIV3			
Type												RW	RW			
Reset												0	0	0	0	0

Overview Controls the clock source and division ratio of GPT clock

Bit(s)	Name	Description
4	CLK3	**Sets up clock source of GPT3** 0: System clock (13MHz) 1: RTC clock (32kHz)
3:0	CLKDIV3	**Setting of GPT3 input clock frequency divider** 0000: Clock source divided by 1 0001: Clock source divided by 2 0010: Clock source divided by 3 0011: Clock source divided by 4 0100: Clock source divided by 5 0101: Clock source divided by 6 0110: Clock source divided by 7 0111: Clock source divided by 8 1000: Clock source divided by 9 1001: Clock source divided by 10 1010: Clock source divided by 11 1011: Clock source divided by 12 1100: Clock source divided by 13 1101: Clock source divided by 16 1110: Clock source divided by 32 1111: Clock source divided by 64

A2140078 GPT3_IRQ_EN GPT IRQ Enabling 00000000

Bit	31	30	29	28	27	26	25	24	23	22	21	20	19	18	17	16
Name																
Type																
Reset																
Bit	15	14	13	12	11	10	9	8	7	6	5	4	3	2	1	0
Name																IRQEN
Type																RW
Reset																0

Overview Controls the enabling/disabling of GPT interrupt

Bit(s)	Name	Description
0	IRQEN	**Enables interrupt of GPT3** 0: Disable interrupt of GPT3 1: Enable interrupt of GPT3

© 2015 - 2017 MediaTek Inc.

This document contains information that is proprietary to MediaTek Inc. ("MediaTek") and/or its licensor(s).
Any unauthorized use, reproduction or disclosure of this document in whole or in part is strictly prohibited.

A214007C GPT3_IRQ_STA GPT IRQ Status 00000000

Bit	31	30	29	28	27	26	25	24	23	22	21	20	19	18	17	16
Name																
Type																
Reset																
Bit	15	14	13	12	11	10	9	8	7	6	5	4	3	2	1	0
Name																IRQSTA
Type																RO
Reset																0

Overview Shows the interrupt status of GPT1

Bit(s)	Name	Description
0	IRQSTA	**Interrupt status of GPT3** 0: No interrupt is generated from GPT3 1: GPT3's interrupt is pending and waiting for service.

A2140080 GPT3_IRQ_ACK GPT IRQ Acknowledgement 00000000

Bit	31	30	29	28	27	26	25	24	23	22	21	20	19	18	17	16
Name																
Type																
Reset																
Bit	15	14	13	12	11	10	9	8	7	6	5	4	3	2	1	0
Name																IRQACK
Type																WO
Reset																0

Overview Acknowledges the GPT interrupt

Bit(s)	Name	Description
0	IRQACK	**Interrupt acknowledgement for GPT3** 0: No effect 1: Associated interrupt request is acknowledged and should be relinquished.

A2140084 GPT3_COUNT GPT3 Counter 00000000

Bit	31	30	29	28	27	26	25	24	23	22	21	20	19	18	17	16
Name	COUNTER3[31:16]															
Type	RO															
Reset	0	0	0	0	0	0	0	0	0	0	0	0	0	0	0	0
Bit	15	14	13	12	11	10	9	8	7	6	5	4	3	2	1	0
Name	COUNTER3[15:0]															
Type	RO															
Reset	0	0	0	0	0	0	0	0	0	0	0	0	0	0	0	0

Overview Timer count of GPT3

Bit(s)	Name	Description
31:0	COUNTER3	**Timer counter of GPT3**

© 2015 - 2017 MediaTek Inc.
This document contains information that is proprietary to MediaTek Inc. ("MediaTek") and/or its licensor(s).
Any unauthorized use, reproduction or disclosure of this document in whole or in part is strictly prohibited.

A2140088 GPT3_COMPARE GPT3 Compare Value 00000000

Bit	31	30	29	28	27	26	25	24	23	22	21	20	19	18	17	16
Name	COMPARE3[31:16]															
Type	RW															
Reset	0	0	0	0	0	0	0	0	0	0	0	0	0	0	0	0
Bit	15	14	13	12	11	10	9	8	7	6	5	4	3	2	1	0
Name	COMPARE3[15:0]															
Type	RW															
Reset	0	0	0	0	0	0	0	0	0	0	0	0	0	0	0	0

Overview Compare value for GPT3

Bit(s)	Name	Description
31:0	COMPARE3	**Compare value of GPT3** Write new compare value will also clear the counter of GPT3.

A21400A0 GPT4_CON GPT4 Control 00000000

Bit	31	30	29	28	27	26	25	24	23	22	21	20	19	18	17	16
Name																
Type																
Reset																
Bit	15	14	13	12	11	10	9	8	7	6	5	4	3	2	1	0
Name										SW_CG4	MODE4				CLR4	EN4
Type										RW	RW				WO	RW
Reset										0	0	0			0	0

Overview General control for GPT4

Bit(s)	Name	Description
6	SW_CG4	**Stop GPT4's clock if this bit is enabled.** 0: Disable 1: Enable
5:4	MODE4	**Operation mode of GPT4** 00: ONE-SHOT mode 01: REPEAT mode 10: FREERUN_I mode 11: FREERUN mode
1	CLR4	**Clears the counter of GPT4 to 0** 0: No effect 1: Clear It takes 2~3 T GPT4_CK for CLR4 to clear the counter of GPT4.
0	EN4	**Enables GPT4** 0: Disable 1: Enable It takes 2~3 T GPT4_CK for EN4 to enable/disable GPT4.

A21400A4 GPT4_CLK GPT4 Clock Setting 00000000

Bit	31	30	29	28	27	26	25	24	23	22	21	20	19	18	17	16
Name																
Type																
Reset																

© 2015 - 2017 MediaTek Inc.
This document contains information that is proprietary to MediaTek Inc. ("MediaTek") and/or its licensor(s).
Any unauthorized use, reproduction or disclosure of this document in whole or in part is strictly prohibited.

Bit	15	14	13	12	11	10	9	8	7	6	5	4	3	2	1	0
Name												CLK4	CLKDIV4			
Type												RW	RW			
Reset												0	0	0	0	0

Overview Controls the clock source and division ratio of GPT clock

Bit(s)	Name	Description
4	CLK4	**Sets up clock source of GPT4** 0: System clock (13MHz) 1: RTC clock (32kHz)
3:0	CLKDIV4	**Setting of GPT4 input clock frequency divider** 0000: Clock source divided by 1 0001: Clock source divided by 2 0010: Clock source divided by 3 0011: Clock source divided by 4 0100: Clock source divided by 5 0101: Clock source divided by 6 0110: Clock source divided by 7 0111: Clock source divided by 8 1000: Clock source divided by 9 1001: Clock source divided by 10 1010: Clock source divided by 11 1011: Clock source divided by 12 1100: Clock source divided by 13 1101: Clock source divided by 16 1110: Clock source divided by 32 1111: Clock source divided by 64

A21400A8 GPT4_IRQ_EN GPT IRQ Enabling 00000000

Bit	31	30	29	28	27	26	25	24	23	22	21	20	19	18	17	16
Name																
Type																
Reset																
Bit	15	14	13	12	11	10	9	8	7	6	5	4	3	2	1	0
Name																IRQEN
Type																RW
Reset																0

Overview Controls the enabling/disabling of GPT interrupt

Bit(s)	Name	Description
0	IRQEN	**Enables interrupt of GPT4** 0: Disable interrupt of GPT4 1: Enable interrupt of GPT4

A21400AC GPT4_IRQ_STA GPT IRQ Status 00000000

Bit	31	30	29	28	27	26	25	24	23	22	21	20	19	18	17	16
Name																
Type																
Reset																
Bit	15	14	13	12	11	10	9	8	7	6	5	4	3	2	1	0
Name																IRQSTA
Type																RO
Reset																0

© 2015 - 2017 MediaTek Inc.

This document contains information that is proprietary to MediaTek Inc. ("MediaTek") and/or its licensor(s).
Any unauthorized use, reproduction or disclosure of this document in whole or in part is strictly prohibited.

Overview Shows the interrupt status of GPT1

Bit(s)	Name	Description
0	IRQSTA	**Interrupt status of GPT4** 0: No interrupt is generated from GPT4 1: GPT4's interrupt is pending and waiting for service.

A21400B0 GPT4_IRQ_ACK GPT IRQ Acknowledgement 00000000

Bit	31	30	29	28	27	26	25	24	23	22	21	20	19	18	17	16
Name																
Type																
Reset																
Bit	15	14	13	12	11	10	9	8	7	6	5	4	3	2	1	0
Name																IRQACK
Type																WO
Reset																0

Overview Acknowledges the GPT interrupt

Bit(s)	Name	Description
0	IRQACK	**Interrupt acknowledgement for GPT4** 0: No effect 1: Associated interrupt request is acknowledged and should be relinquished.

A21400B4 GPT4_COUNT GPT4 Counter 00000000

Bit	31	30	29	28	27	26	25	24	23	22	21	20	19	18	17	16
Name	COUNTER4[31:16]															
Type	RO															
Reset	0	0	0	0	0	0	0	0	0	0	0	0	0	0	0	0
Bit	15	14	13	12	11	10	9	8	7	6	5	4	3	2	1	0
Name	COUNTER4[15:0]															
Type	RO															
Reset	0	0	0	0	0	0	0	0	0	0	0	0	0	0	0	0

Overview Timer count of GPT4

Bit(s)	Name	Description
31:0	COUNTER4	**Timer counter of GPT4**

A21400B8 GPT4_COMPARE GPT4 Compare Value 00000000

Bit	31	30	29	28	27	26	25	24	23	22	21	20	19	18	17	16
Name	COMPARE4[31:16]															
Type	RW															
Reset	0	0	0	0	0	0	0	0	0	0	0	0	0	0	0	0
Bit	15	14	13	12	11	10	9	8	7	6	5	4	3	2	1	0
Name	COMPARE4[15:0]															
Type	RW															
Reset	0	0	0	0	0	0	0	0	0	0	0	0	0	0	0	0

Overview Compare value for GPT4

© 2015 - 2017 MediaTek Inc.

This document contains information that is proprietary to MediaTek Inc. ("MediaTek") and/or its licensor(s).
Any unauthorized use, reproduction or disclosure of this document in whole or in part is strictly prohibited.

Bit(s)	Name	Description
31:0	COMPARE4	**Compare value of GPT4** Write new compare value will also clear the counter of GPT4.

A21400D0 GPT5_CON GPT5 Control 00000000

Bit	31	30	29	28	27	26	25	24	23	22	21	20	19	18	17	16
Name																
Type																
Reset																
Bit	15	14	13	12	11	10	9	8	7	6	5	4	3	2	1	0
Name										SW_CG5	MODE5				CLR5	EN5
Type										RW	RW				WO	RW
Reset										0	0	0			0	0

Overview General control for GPT5

Bit(s)	Name	Description
6	SW_CG5	**Stop GPT5's clock if this bit is enabled.** 0: Disable 1: Enable
5:4	MODE5	**Operation mode of GPT5** 00: ONE-SHOT mode 01: REPEAT mode 10: FREERUN_I mode 11: FREERUN mode
1	CLR5	**Clears the counter of GPT5 to 0** 0: No effect 1: Clear It takes 2~3 T GPT5_CK for CLR5 to clear the counter of GPT5.
0	EN5	**Enables GPT5** 0: Disable 1: Enable It takes 2~3 T GPT5_CK for EN5 to enable/disable GPT5.

A21400D4 GPT5_CLK GPT5 Clock Setting 00000000

Bit	31	30	29	28	27	26	25	24	23	22	21	20	19	18	17	16
Name																
Type																
Reset																
Bit	15	14	13	12	11	10	9	8	7	6	5	4	3	2	1	0
Name												CLK5	CLKDIV5			
Type												RW	RW			
Reset												0	0	0	0	0

Overview Controls the clock source and division ratio of GPT clock

Bit(s)	Name	Description
4	CLK5	**Sets up clock source of GPT5** 0: System clock (13MHz) 1: RTC clock (32kHz)
3:0	CLKDIV5	**Setting of GPT5 input clock frequency divider** 0000: Clock source divided by 1 0001: Clock source divided by 2

© 2015 - 2017 MediaTek Inc.

This document contains information that is proprietary to MediaTek Inc. ("MediaTek") and/or its licensor(s).
Any unauthorized use, reproduction or disclosure of this document in whole or in part is strictly prohibited.

Bit(s)	Name	Description
		0010: Clock source divided by 3 0011: Clock source divided by 4 0100: Clock source divided by 5 0101: Clock source divided by 6 0110: Clock source divided by 7 0111: Clock source divided by 8 1000: Clock source divided by 9 1001: Clock source divided by 10 1010: Clock source divided by 11 1011: Clock source divided by 12 1100: Clock source divided by 13 1101: Clock source divided by 16 1110: Clock source divided by 32 1111: Clock source divided by 64

A21400D8 GPT5_IRQ_EN GPT IRQ Enabling 00000000

Bit	31	30	29	28	27	26	25	24	23	22	21	20	19	18	17	16
Name																
Type																
Reset																
Bit	15	14	13	12	11	10	9	8	7	6	5	4	3	2	1	0
Name																IRQEN
Type																RW
Reset																0

Overview Controls the enabling/disabling of GPT interrupt

Bit(s)	Name	Description
0	IRQEN	**Enables interrupt of GPT5** 0: Disable interrupt of GPT5 1: Enable interrupt of GPT5

A21400DC GPT5_IRQ_STA GPT IRQ Status 00000000

Bit	31	30	29	28	27	26	25	24	23	22	21	20	19	18	17	16
Name																
Type																
Reset																
Bit	15	14	13	12	11	10	9	8	7	6	5	4	3	2	1	0
Name																IRQSTA
Type																RO
Reset																0

Overview Shows the interrupt status of GPT1

Bit(s)	Name	Description
0	IRQSTA	**Interrupt status of GPT5** 0: No interrupt is generated from GPT5 1: GPT5's interrupt is pending and waiting for service.

© 2015 - 2017 MediaTek Inc.

This document contains information that is proprietary to MediaTek Inc. ("MediaTek") and/or its licensor(s).
Any unauthorized use, reproduction or disclosure of this document in whole or in part is strictly prohibited.

A21400E0 GPT5_IRQ_ACK GPT IRQ Acknowledgement 00000000

Bit	31	30	29	28	27	26	25	24	23	22	21	20	19	18	17	16
Name																
Type																
Reset																
Bit	15	14	13	12	11	10	9	8	7	6	5	4	3	2	1	0
Name																IRQACK
Type																WO
Reset																0

Overview Acknowledges the GPT interrupt

Bit(s)	Name	Description
0	IRQACK	**Interrupt acknowledgement for GPT5** 0: No effect 1: Associated interrupt request is acknowledged and should be relinquished.

A21400E4 GPT5_COUNT GPT5 Counter 00000000

Bit	31	30	29	28	27	26	25	24	23	22	21	20	19	18	17	16
Name	COUNTER5[31:16]															
Type	RO															
Reset	0	0	0	0	0	0	0	0	0	0	0	0	0	0	0	0
Bit	15	14	13	12	11	10	9	8	7	6	5	4	3	2	1	0
Name	COUNTER5[15:0]															
Type	RO															
Reset	0	0	0	0	0	0	0	0	0	0	0	0	0	0	0	0

Overview Timer count of GPT5

Bit(s)	Name	Description
31:0	COUNTER5	**Timer counter of GPT5**

A21400E8 GPT5_COMPARE GPT5 Compare Value 00000000

Bit	31	30	29	28	27	26	25	24	23	22	21	20	19	18	17	16
Name	COMPARE5[31:16]															
Type	RW															
Reset	0	0	0	0	0	0	0	0	0	0	0	0	0	0	0	0
Bit	15	14	13	12	11	10	9	8	7	6	5	4	3	2	1	0
Name	COMPARE5[15:0]															
Type	RW															
Reset	0	0	0	0	0	0	0	0	0	0	0	0	0	0	0	0

Overview Compare value for GPT5

Bit(s)	Name	Description
31:0	COMPARE5	**Compare value of GPT5** Write new compare value will also clear the counter of GPT5.

© 2015 - 2017 MediaTek Inc.

This document contains information that is proprietary to MediaTek Inc. ("MediaTek") and/or its licensor(s).
Any unauthorized use, reproduction or disclosure of this document in whole or in part is strictly prohibited.

A2140100 GPT6_CON GPT6 Control 00000000

Bit	31	30	29	28	27	26	25	24	23	22	21	20	19	18	17	16
Name																
Type																
Reset																
Bit	15	14	13	12	11	10	9	8	7	6	5	4	3	2	1	0
Name										SW_CG6	MODE6				CLR6	EN6
Type										RW	RW				WO	RW
Reset										0	0	0			0	0

Overview General control for GPT6

Bit(s)	Name	Description
6	SW_CG6	**Stop GPT6's clock if this bit is enabled.** 0: Disable 1: Enable
5:4	MODE6	**Operation mode of GPT6** 00: ONE-SHOT mode 01: REPEAT mode 10: FREERUN_I mode 11: FREERUN mode
1	CLR6	**Clears the counter of GPT6 to 0** 0: No effect 1: Clear It takes 2~3 T GPT6_CK for CLR6 to clear the counter of GPT6.
0	EN6	**Enables GPT6** 0: Disable 1: Enable It takes 2~3 T GPT6_CK for EN6 to enable/disable GPT6.

A2140104 GPT6_CLK GPT6 Clock Setting 00000000

Bit	31	30	29	28	27	26	25	24	23	22	21	20	19	18	17	16
Name																
Type																
Reset																
Bit	15	14	13	12	11	10	9	8	7	6	5	4	3	2	1	0
Name												CLK6	CLKDIV6			
Type												RW	RW			
Reset												0	0	0	0	0

Overview Controls the clock source and division ratio of GPT clock

Bit(s)	Name	Description
4	CLK6	**Set clock source of GPT6** 0: System clock (13MHz) 1: RTC clock (32kHz)
3:0	CLKDIV6	**Setting of GPT6 input clock frequency divider** 0000: Clock source divided by 1 0001: Clock source divided by 2 0010: Clock source divided by 3 0011: Clock source divided by 4 0100: Clock source divided by 5 0101: Clock source divided by 6 0110: Clock source divided by 7 0111: Clock source divided by 8 1000: Clock source divided by 9 1001: Clock source divided by 10

© 2015 - 2017 MediaTek Inc.

This document contains information that is proprietary to MediaTek Inc. ("MediaTek") and/or its licensor(s).
Any unauthorized use, reproduction or disclosure of this document in whole or in part is strictly prohibited.

Bit(s)	Name	Description
		1010: Clock source divided by 11 1011: Clock source divided by 12 1100: Clock source divided by 13 1101: Clock source divided by 16 1110: Clock source divided by 32 1111: Clock source divided by 64

A2140108 GPT6_IRQ_EN GPT IRQ Enabling 00000000

Bit	31	30	29	28	27	26	25	24	23	22	21	20	19	18	17	16
Name																
Type																
Reset																
Bit	15	14	13	12	11	10	9	8	7	6	5	4	3	2	1	0
Name																IRQEN
Type																RW
Reset																0

Overview Controls the enabling/disabling of GPT interrupt

Bit(s)	Name	Description
0	IRQEN	**Enables interrupt of GPT6** 0: Disable interrupt of GPT6 1: Enable interrupt of GPT6

A214010C GPT6_IRQ_STA GPT IRQ Status 00000000

Bit	31	30	29	28	27	26	25	24	23	22	21	20	19	18	17	16
Name																
Type																
Reset																
Bit	15	14	13	12	11	10	9	8	7	6	5	4	3	2	1	0
Name																IRQSTA
Type																RO
Reset																0

Overview Shows the interrupt status of GPT1

Bit(s)	Name	Description
0	IRQSTA	**Interrupt status of GPT6** 0: No interrupt is generated from GPT6 1: GPT6's interrupt is pending and waiting for service.

A2140110 GPT6_IRQ_ACK GPT IRQ Acknowledgement 00000000

Bit	31	30	29	28	27	26	25	24	23	22	21	20	19	18	17	16
Name																
Type																
Reset																
Bit	15	14	13	12	11	10	9	8	7	6	5	4	3	2	1	0
Name																IRQACK
Type																WO
Reset																0

© 2015 - 2017 MediaTek Inc.

This document contains information that is proprietary to MediaTek Inc. ("MediaTek") and/or its licensor(s).
Any unauthorized use, reproduction or disclosure of this document in whole or in part is strictly prohibited.

Overview Acknowledges the GPT interrupt

Bit(s)	Name	Description
0	IRQACK	**Interrupt acknowledgement for GPT6** 0: No effect 1: Associated interrupt request is acknowledged and should be relinquished.

A2140114 GPT6_COUNTL GPT6 Counter L 00000000

Bit	31	30	29	28	27	26	25	24	23	22	21	20	19	18	17	16
Name	COUNTER6L[31:16]															
Type	RO															
Reset	0	0	0	0	0	0	0	0	0	0	0	0	0	0	0	0
Bit	15	14	13	12	11	10	9	8	7	6	5	4	3	2	1	0
Name	COUNTER6L[15:0]															
Type	RO															
Reset	0	0	0	0	0	0	0	0	0	0	0	0	0	0	0	0

Overview Lower word timer count for GPT6

Bit(s)	Name	Description
31:0	COUNTER6L	**Lower word of timer count of GPT6** The read operation of GPT6_COUNTL will make GPT6_COUNTH fixed until the next read operation of GPT6_COUNTL.

A2140118 GPT6_COMPAREL GPT6 Compare Value L 00000000

Bit	31	30	29	28	27	26	25	24	23	22	21	20	19	18	17	16
Name	COMPARE6L[31:16]															
Type	RW															
Reset	0	0	0	0	0	0	0	0	0	0	0	0	0	0	0	0
Bit	15	14	13	12	11	10	9	8	7	6	5	4	3	2	1	0
Name	COMPARE6L[15:0]															
Type	RW															
Reset	0	0	0	0	0	0	0	0	0	0	0	0	0	0	0	0

Overview Lower word compare value for GPT6

Bit(s)	Name	Description
31:0	COMPARE6L	**Lower word of compare value of GPT6** Write new compare value will also clear the counter of GPT6.

A214011C GPT6_COUNTH GPT6 Counter L 00000000

Bit	31	30	29	28	27	26	25	24	23	22	21	20	19	18	17	16
Name	COUNTER6H[31:16]															
Type	RO															
Reset	0	0	0	0	0	0	0	0	0	0	0	0	0	0	0	0
Bit	15	14	13	12	11	10	9	8	7	6	5	4	3	2	1	0
Name	COUNTER6H[15:0]															
Type	RO															
Reset	0	0	0	0	0	0	0	0	0	0	0	0	0	0	0	0

© 2015 - 2017 MediaTek Inc.

This document contains information that is proprietary to MediaTek Inc. ("MediaTek") and/or its licensor(s).
Any unauthorized use, reproduction or disclosure of this document in whole or in part is strictly prohibited.

Overview Higher word timer count for GPT6

Bit(s)	Name	Description
31:0	COUNTER6H	**Higher word of timer count of GPT6**

A2140120 **GPT6_COMPAREH** **GPT6 Compare Value H** **00000000**

Bit	31	30	29	28	27	26	25	24	23	22	21	20	19	18	17	16
Name	COMPARE6H[31:16]															
Type	RW															
Reset	0	0	0	0	0	0	0	0	0	0	0	0	0	0	0	0
Bit	15	14	13	12	11	10	9	8	7	6	5	4	3	2	1	0
Name	COMPARE6H[15:0]															
Type	RW															
Reset	0	0	0	0	0	0	0	0	0	0	0	0	0	0	0	0

Overview Higher word compare value for GPT6

Bit(s)	Name	Description
31:0	COMPARE6H	**Higher word of compare of GPT6** Write new compare value will also clear the counter of GPT6.

© 2015 - 2017 MediaTek Inc.
This document contains information that is proprietary to MediaTek Inc. ("MediaTek") and/or its licensor(s).
Any unauthorized use, reproduction or disclosure of this document in whole or in part is strictly prohibited.

13. Pulse Width Modulation

13.1. General Description

The generic pulse width modulators (PWM) are implemented to generate pulse sequences with programmable frequency and duty cycle for LCD backlight. The duration of the PWM output signal is LOW as long as the internal counter value is bigger than or equal to the threshold value. The waveform is shown in Figure 13-1.

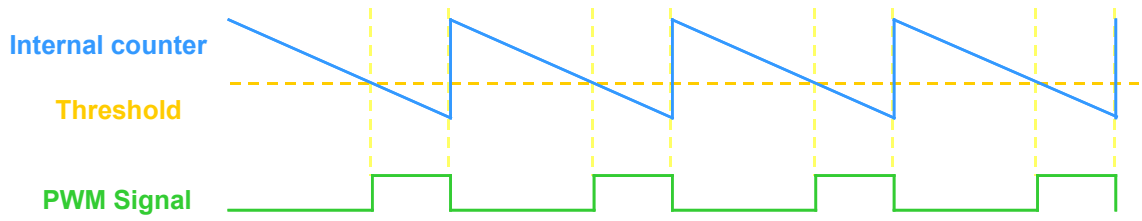

Figure 13-1. PWM waveform

The frequency and volume of PWM output signal are determined by registers PWM_1CH_CTRL, PWM_1CH_THRES, and PWM_1CH_COUNT. The POWERDOWN (pwm_1ch_pdn) signal is applied to power down the PWM_1CH module. When PWM_1CH is deactivated (pwm_1ch_pdn=1), the output will be in LOW state.

The output PWM frequency is determined by:

$$\frac{CLK}{CLOCK_DIV \times (PWM_1CH_COUNT + 1)}$$

$CLK = 13\ MHz$, when $CLK_SLE=0$
$CLK = 32\ KHz$, when $CLK_SLE=1$
$CLOCK_DIV = 1$, when $CLK_DIV = 00b$
$CLOCK_DIV = 2$, when $CLK_DIV = 01b$
$CLOCK_DIV = 4$, when $CLK_DIV = 10b$
$CLOCK_DIV = 8$, when $CLK_DIV = 11b$

The output PWM duty cycle is determined by: $\frac{PWM_1CH_THRES}{PWM_1CH_COUNT + 1}$

Note that PWM_1CH_THRES should be less than PWM_1CH_COUNT. If this condition is not satisfied, the output pulse of the PWM will always behigh. Figure 7-2 is the PWM waveform with indicated register values.

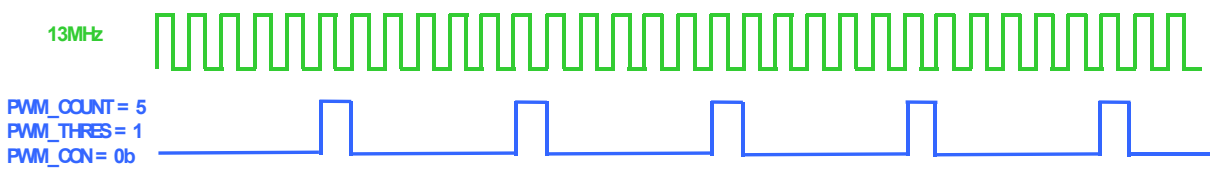

Figure 13-2. PWM waveform with register values

© 2015 - 2017 MediaTek Inc.

This document contains information that is proprietary to MediaTek Inc. ("MediaTek") and/or its licensor(s).
Any unauthorized use, reproduction or disclosure of this document in whole or in part is strictly prohibited.

13.2. Register Definition

There are six PWM channels in this SOC. The usage of the registers below is the same except that the base address should be changed to respective one.

PWM number	Base address
PWM0 (Always on domain)	0xA2160000
PWM1 (Always on domain)	0xA2170000
PWM2 (Power down domain)	0xA0160000
PWM3 (Power down domain)	0xA0170000
PWM4 (Power down domain)	0xA0180000
PWM5 (Power down domain)	0xA0190000

Module name: PulseWidthModulation Base address: (+A2160000h)

Address	Name	Width	Register Function
A2160000	PWM_1CH_CTRL_ADDR	16	PWM control register
A2160004	PWM_1CH_COUNT_ADDR	16	PWM max counter value register
A2160008	PWM_1CH_THRESH_ADDR	16	PWM threshold value register

A2160000 PWM_1CH_CTRL_ADDR PWM control register 0000

Bit	15	14	13	12	11	10	9	8	7	6	5	4	3	2	1	0
Name														PWM_1CH_CLK_SEL	PWM_1CH_CLK_DIV	
Type														RW	RW	
Reset														0	0	0

Bit(s)	Mnemonic	Name	Description
2	PWM_1CH_CLK_SEL	CLK_SEL	**Selects source clock frequency of PWM** 0:CLK=13MHz (unable to work in sleep mode) 1: CLK=32kHz
1:0	PWM_1CH_CLK_DIV	CLK_DIV	**Selects clock prescaler scale of PWM** 2'b00: f=fclk 2'b01: f=fclk/2 2'b10: f=fclk/4 2'b11: f=fclk/8

A2160004 PWM_1CH_COUNT_ADDR PWM max counter value register 0000

Bit	15	14	13	12	11	10	9	8	7	6	5	4	3	2	1	0
Name				PWM_1CH_COUNT												
Type				RW												
Reset				1	1	1	1	1	1	1	1	1	1	1	1	1

© 2015 - 2017 MediaTek Inc.

This document contains information that is proprietary to MediaTek Inc. ("MediaTek") and/or its licensor(s).
Any unauthorized use, reproduction or disclosure of this document in whole or in part is strictly prohibited.

Bit(s)	Mnemonic	Name	Description
12:0	**PWM_1CH_COUNT**	PWM_1CH_COUNT	**PWM max. counter value** This value is the initial value for the internal counter. Regardless of the operation mode, if PWM_1CH_COUNT is written when the internal counter is counting backwards, the new initial value will not take effect until the internal counter counts down to 0, i.e. a complete period.

A2160008 **PWM_1CH_THRESH_ADDR** **PWM threshold value register** **0000**

Bit	15	14	13	12	11	10	9	8	7	6	5	4	3	2	1	0
Name				**PWM_1CH_THRES**												
Type				RW												
Reset				0	0	0	0	0	0	0	0	0	0	0	0	0

Bit(s)	Mnemonic	Name	Description
12:0	**PWM_1CH_THRES**	PWM_1CH_THRES	**PWM threshold value** When the internal counter value is bigger than or equal to PWM_1CH_THRES, the PWM output signal will be 0. When the internal counter is less than PWM_1CH_THRES, the PWM output signal will be 1.

© 2015 - 2017 MediaTek Inc.

This document contains information that is proprietary to MediaTek Inc. (“MediaTek”) and/or its licensor(s).
Any unauthorized use, reproduction or disclosure of this document in whole or in part is strictly prohibited.

14. Keypad Scanner

14.1. General Description

The keypad supports two types of keypads, 3*3 single keys and 3*3 configurable double keys, and it will not be powered off to support the system wake-up event.

The 3*3 keypad can be divided into two parts: 1) The keypad interface including three columns and three rows (see Figure 14-1 and Figure 14-2); 2) The key detection block provides key pressed, key released and de-bounce mechanisms.

Each time the key is pressed or released, i.e. something different in the 3x3 matrix, the key detection block senses the change and recognizes if a key has been pressed or released. Whenever the key status changes and is stable, a KEYPAD IRQ will be issued. The MCU can then read the key(s) pressed directly in register KP_MEM1 and KP_MEM2. To ensure the key pressed information is not missed, the status register in keypad will not be read-cleared by the APB read command. The status register can only be changed by the key-pressed detection FSM.

This keypad detects one or two keys pressed simultaneously with any combination. Figure 14-3 shows the condition when one key is pressed. Figure 14-4(a) and Figure 14-4(b) illustrate the cases of two keys pressed. Since the key pressed detection depends on the HIGH or LOW level of the external keypad interface, if the keys are pressed at the same time, and there exists a key that is on the same column and the same row with other keys, the pressed key cannot be correctly decoded. For example, if there are three key pressed: key1 = (x1, y1), key2 = (x2, y2), and key3 = (x1, y2), both key3 and key4 = (x2, y1) will be detected, and therefore they cannot be distinguished correctly. Hence, the keypad detects only one or two keys pressed simultaneously in any combination. More than two keys pressed simultaneously in a specific pattern will retrieve wrong information.

The 3*3 keypad supports a 3*3*2 = 18 keys matrix. The 18 keys are divided into 9 sub groups, and each group consists of 2 keys and a 20ohm resistor. Besides the limitation of the 3*3 keypad, 3*3 keypad has another limitation, which is it cannot detect two keys pressed simultaneously when the two keys are in one group, i.e. the 3*3 keypad cannot detect key 0 and key 1 or key 15 and key 16 pressed simultaneously.

Table 14-1. 3*3 single key's order number in COL/ROW matrix

	COL0	**COL1**	**COL2**
ROW2	18	19	20
ROW1	9	10	11
ROW0	0	1	2

Table 14-2. 3*3 double key's order number in COL/ROW matrix

	COL0	**COL1**	**COL2**
ROW2	26/27	28/29	30/31
ROW1	13/14	15/16	17/18
ROW0	0/1	2/3	4/5

© 2015 - 2017 MediaTek Inc.

This document contains information that is proprietary to MediaTek Inc. ("MediaTek") and/or its licensor(s).
Any unauthorized use, reproduction or disclosure of this document in whole or in part is strictly prohibited.

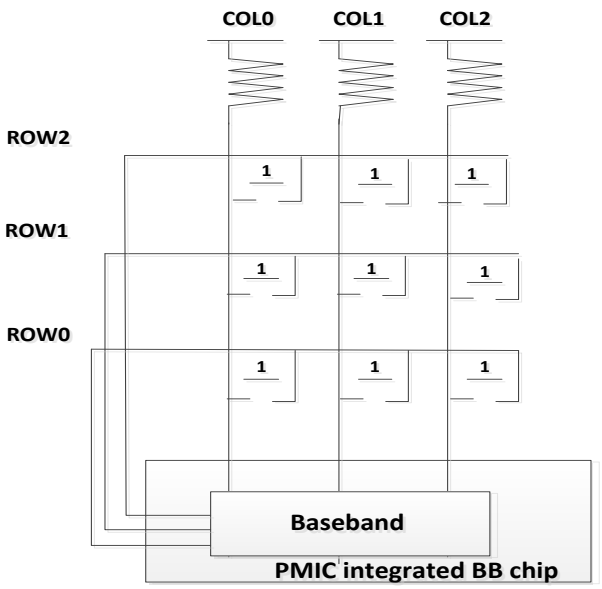

Figure 14-1. 3x3 keypad matrix (9 keys)

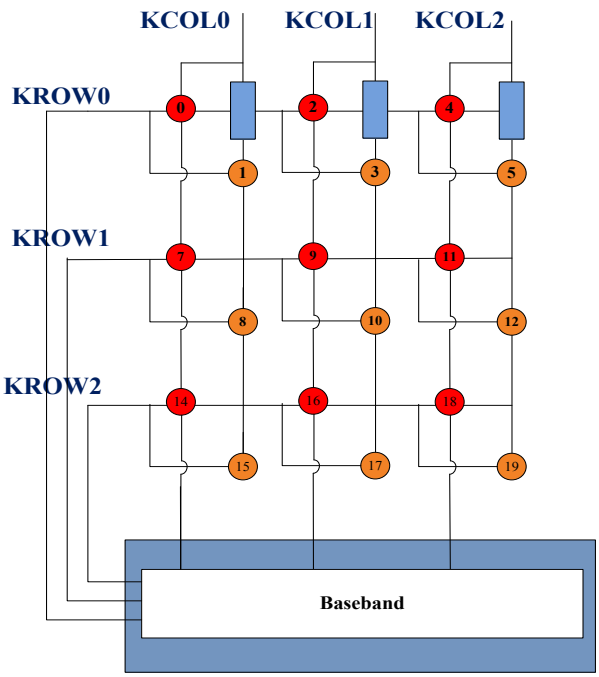

Figure 14-2. 3x3 keypad matrix (18 keys)

© 2015 - 2017 MediaTek Inc.
This document contains information that is proprietary to MediaTek Inc. ("MediaTek") and/or its licensor(s).
Any unauthorized use, reproduction or disclosure of this document in whole or in part is strictly prohibited.

14.1.1. Waveform

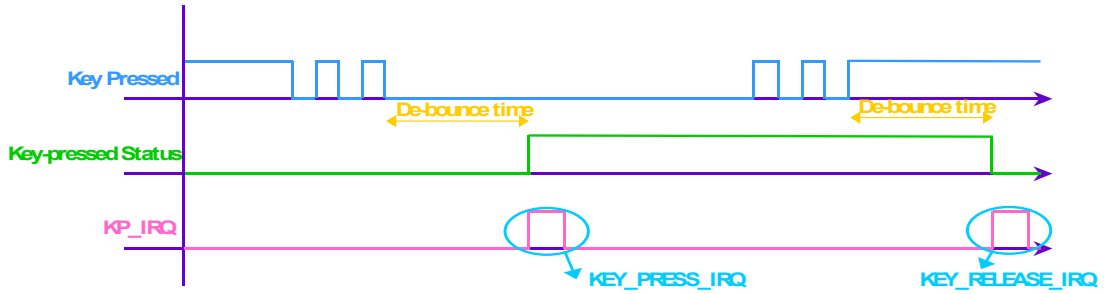

Figure 14-3. One key pressed with de-bounce mechanism denoted

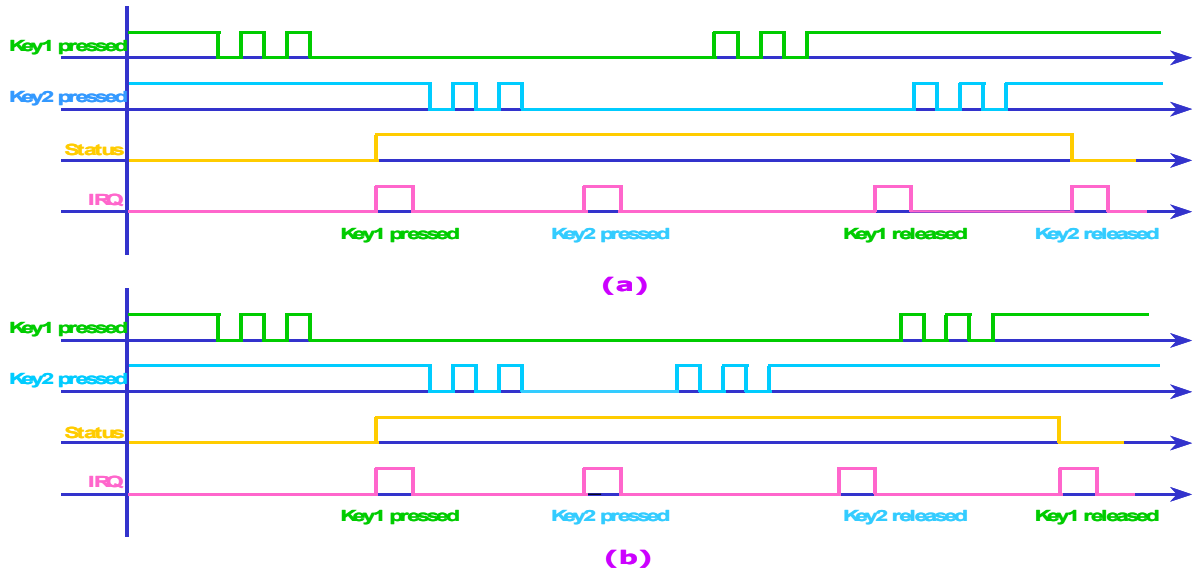

Figure 14-4. (a) Two keys pressed, case 1; (b) Two keys pressed, case 2

14.1.2. Keypad Detection Flow

14.1.2.1. Single Keypad Detection

In single keypad, the KROWx is always in output mode and KCOLx always in input mode. KCOLx has low detection capability, which means that if there are no keys pressed, KCOLx will be pulled up and KROWx always pulled low.

In Figure 14-2, assume A1 (red key) is pressed, KCOLx can detect key pressed by the low pulse signal. According to the order of low pulse time occurrence, t1, t2 and t3 decide which KROWx is pressed. In this example, KCOL0 can detect a low pulse signal at t1 to know A1 key has been pressed.

© 2015 - 2017 MediaTek Inc.

This document contains information that is proprietary to MediaTek Inc. (“MediaTek”) and/or its licensor(s).
Any unauthorized use, reproduction or disclosure of this document in whole or in part is strictly prohibited.

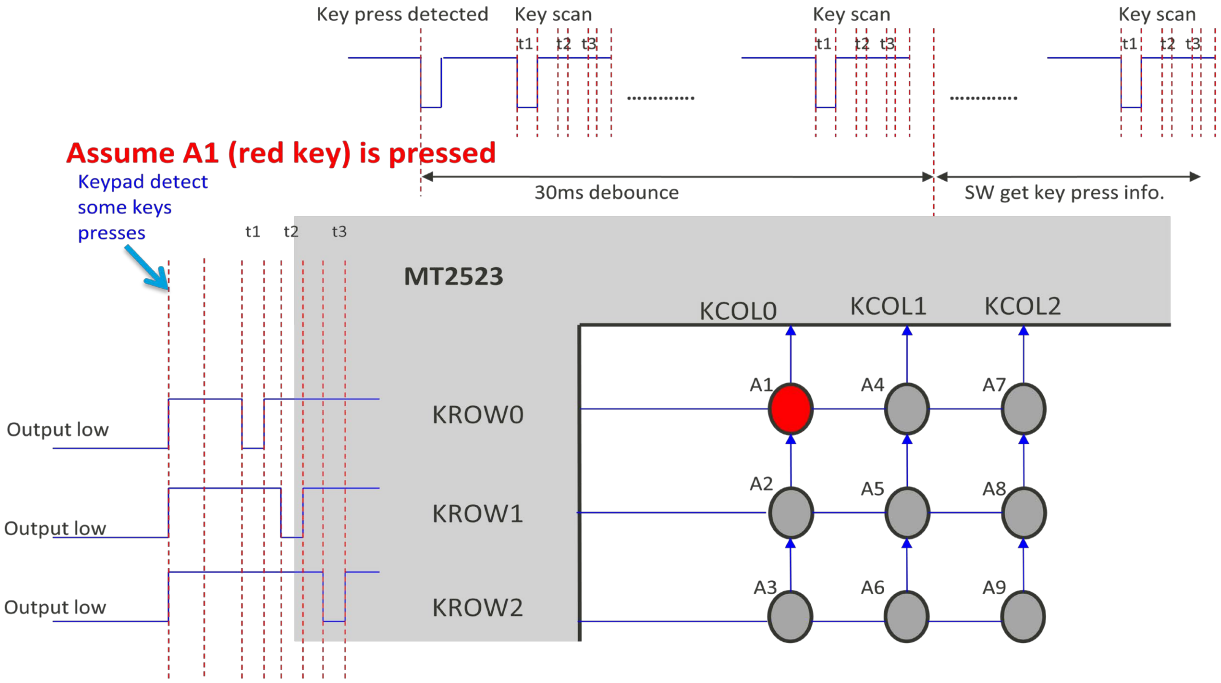

Figure 14-5. Single keypad detection method

14.1.2.2. Double Keypad Detection Flow

Figure 14-6 is the brief schematic diagram of double keypad internal circuit, including the following characteristics:

1. 20K ohm resistors on new added keys are required.
2. KCOL needs 200K ohm internal PD/PU resistors.
3. KROW needs 2K ohm internal PD resistors.
4. KROW/KCOL should be bi-directional.

© 2015 - 2017 MediaTek Inc.

This document contains information that is proprietary to MediaTek Inc. (“MediaTek”) and/or its licensor(s).
Any unauthorized use, reproduction or disclosure of this document in whole or in part is strictly prohibited.

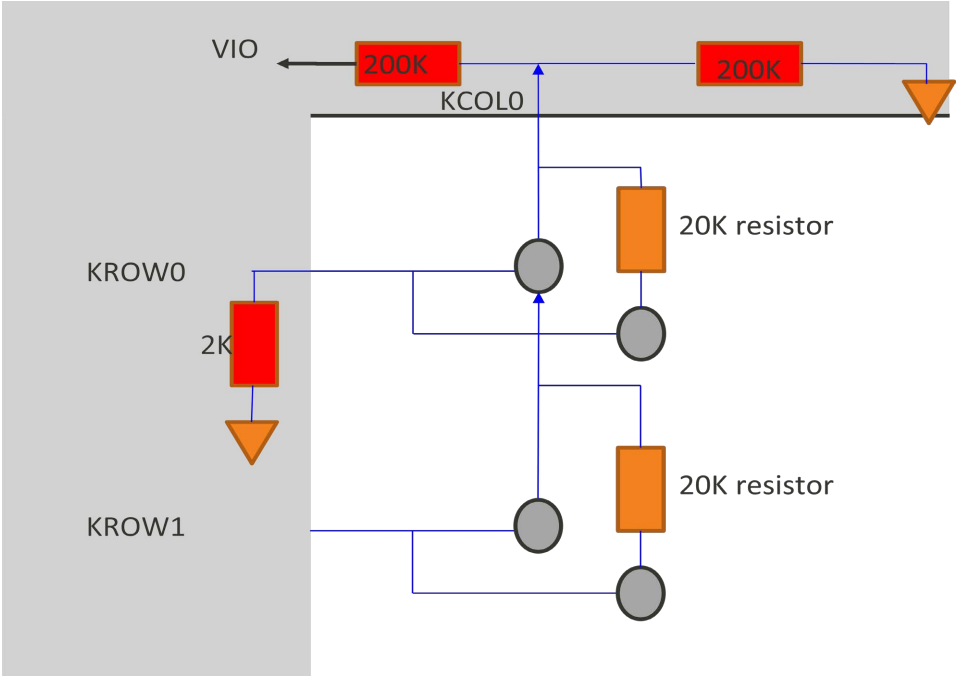

Figure 14-6. Brief schematic diagram of double keypad

The detection flow of single keypad case in double keypad hardware is described step by step in Figure 14-7, Figure 14-8 and Figure 14-9. In Figure 14-7, KCOLx is initialized as input mode and the KROWx as output mode. In step 1, internal pull up resistor is enabled in KCOLx to let it stuck at high, and output low to all of KROWx in step 2. In step 4, the falling edge signal can be detected from KCOL0 to start key scanning.

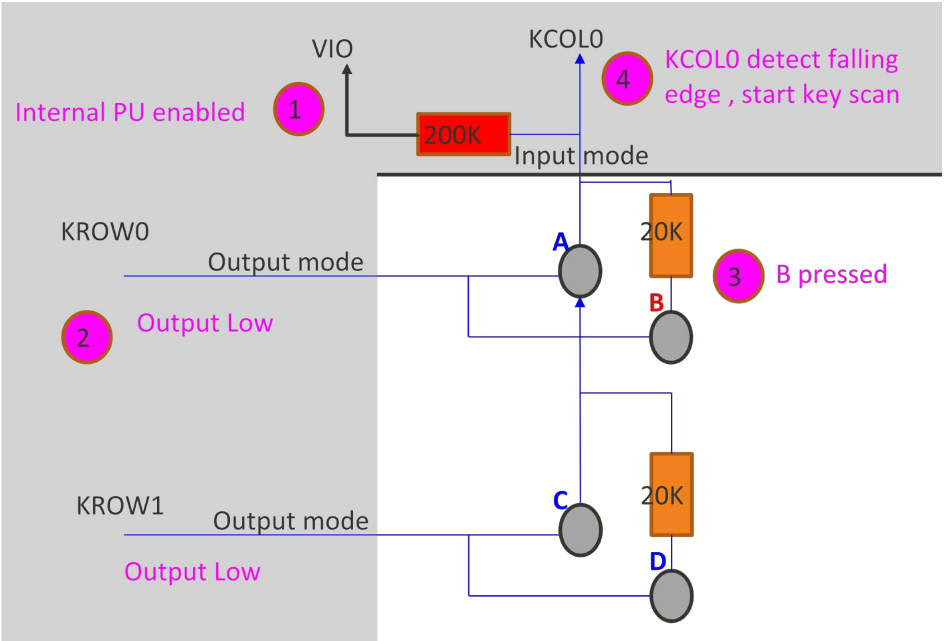

Figure 14-7. Single key case

© 2015 - 2017 MediaTek Inc.

This document contains information that is proprietary to MediaTek Inc. (“MediaTek”) and/or its licensor(s).
Any unauthorized use, reproduction or disclosure of this document in whole or in part is strictly prohibited.

The keypad row scan is depicted in Figure 14-8. The pull-up resistor is disabled and the pull-down resistor is enabled to let KCOL0 stuck at low in step 5 and 6. In step 7, KROW0 is sent logic high pulse at time t1, and KCOL0 can receive high pulse signal at time t1 due to key B is still pressed. Hence, the keypad in which rows can be decided.

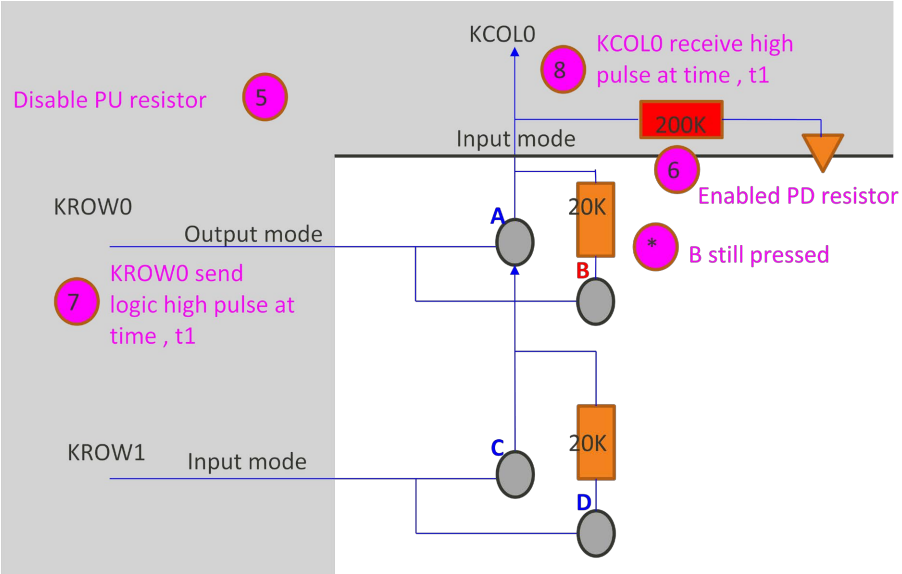

Figure 14-8. Row scan

The row position is decided after the row scan. In Figure 14-8, column scanning is conducted to locate the final position of key. All KROWx are changed to input mode, and pull-down resistor is enabled in step 9. Switch KCOL0 to output mode and send logic high pulse in step 10 for KROW0 to receive logic low level and know key B is pressed in the final step 11.

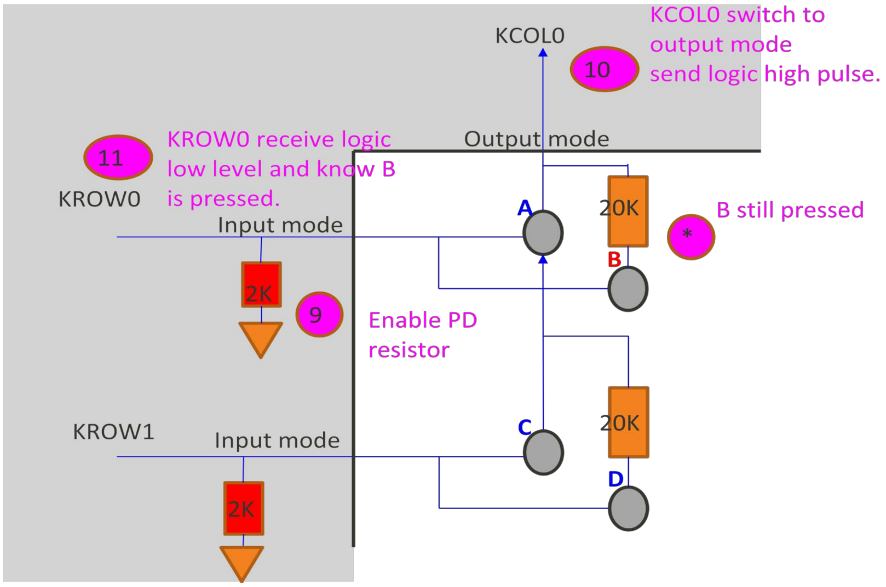

Figure 14-9. Column scan

© 2015 - 2017 MediaTek Inc.

This document contains information that is proprietary to MediaTek Inc. (“MediaTek”) and/or its licensor(s).
Any unauthorized use, reproduction or disclosure of this document in whole or in part is strictly prohibited.

14.1.3. Programming Guide

14.1.3.1. Single Keypad Command Sequence Example

Address	Register name	R/W		Value	Loop	Register function
A20D0024	KP_EN		W	0x0001		Enable keypad
A20D0020	KP_SEL		W	0x1c70		Select single keypad Enable 3 rows and 3 columns
A20D0018	KP_DEBOUNCE		W	0x0018		Set up de-bounce time
A20D0018	KP_DEBOUNCE	R		0x0018	Loop	

14.1.3.2. Double Keypad Command Sequence Example

Address	Register name	R/W		Value	Loop	Register function
A20D0024	KP_EN		W	0x0001		Enable keypad
A20D0020	KP_SEL		W	0x1c71		Select double keypad; Enable 3 rows and 3 columns
A20D0018	KP_DEBOUNCE		W	0x0018		Set up de-bounce time
A20D001C	KP_SCAN_TIMING		W	0x0011		
A20D0018	KP_DEBOUNCE	R		0x0018	Loop	

14.2. Register Definition

Module name: KP Base address: (+A20D0000h)

Address	Name	Width	Register Function
A20D0000	**KP_STA**	16	**Keypad Status**
A20D0004	**KP_MEM1**	16	**Keypad Scanning Output Register** Shows the key-pressed status of key 0 (LSB) ~ key 15. Refer to Table 14-1 and Table 14-2.
A20D0008	**KP_MEM2**	16	**Keypad Scanning Output Register** Shows the key-pressed status of key 16 (LSB) ~ key 31. Refer to Table 14-1 and Table 14-2.
A20D0018	**KP_DEBOUNCE**	16	**De-bounce Period Setting** Defines the waiting period before key pressing or release events are considered stable. If the de-bounce setting is too small, the keypad will be too sensitive and detect too many unexpected key presses. The suitable de-bounce time setting must be adjusted according to the user's habit.
A20D001C	**KP_SCAN_TIMING**	16	**Keypad Scan Timing Adjustment Register** Sets up the 3*3 keypad scan timing. Note: ROW_SCAN_DIV > ROW_ HIGH_PULSE and COL_SCAN_DIV > COL_ HIGH_PULSE. ROW_ HIGH_PULSE /COL_ HIGH_PULSE are used to lower the power consumption for it decreases the actual scan number during the de-bounce time.
A20D0020	**KP_SEL**	16	**Keypad Selection Register** For selecting: 1: To use single keypad or double keypad 2: Which cols and rows are used when double keypad is used
A20D0024	**KP_EN**	16	**Keypad Enable Register** Enables/Disables keypad.

© 2015 - 2017 MediaTek Inc.

This document contains information that is proprietary to MediaTek Inc. ("MediaTek") and/or its licensor(s).
Any unauthorized use, reproduction or disclosure of this document in whole or in part is strictly prohibited.

A20D0000 KP_STA Keypad Status 0000

Bit	15	14	13	12	11	10	9	8	7	6	5	4	3	2	1	0
Name																STA
Type																RO
Reset																0

Overview

Bit(s)	Mnemonic	Name	Description
0	**STA**	STA	**Indicates keypad status** This register will not be cleared by the read operation. 0: No key pressed 1: Key pressed

A20D0004 KP_MEM1 Keypad Scanning Output Register EE3F

Bit	15	14	13	12	11	10	9	8	7	6	5	4	3	2	1	0
Name	KEY15	KEY14	KEY13		KEY11	KEY10	KEY9				KEY5	KEY4	KEY3	KEY2	KEY1	KEY0
Type	RO	RO	RO		RO	RO	RO				RO	RO	RO	RO	RO	RO
Reset	1	1	1		1	1	1				1	1	1	1	1	1

Overview Shows the key-pressed status of key 0 (LSB) ~ key 15. Refer to Table 14-1 and Table 14-2.

Bit(s)	Mnemonic	Name	Description
15	**KEY15**	KEY15	
14	**KEY14**	KEY14	
13	**KEY13**	KEY13	
11	**KEY11**	KEY11	
10	**KEY10**	KEY10	
9	**KEY9**	KEY9	
5	**KEY5**	KEY5	
4	**KEY4**	KEY4	
3	**KEY3**	KEY3	
2	**KEY2**	KEY2	
1	**KEY1**	KEY1	
0	**KEY0**	KEY0	

A20D0008 KP_MEM2 Keypad Scanning Output Register FC1F

Bit	15	14	13	12	11	10	9	8	7	6	5	4	3	2	1	0
Name	KEY31	KEY30	KEY29	KEY28	KEY27	KEY26						KEY20	KEY19	KEY18	KEY17	KEY16
Type	RO	RO	RO	RO	RO	RO						RO	RO	RO	RO	RO
Reset	1	1	1	1	1	1						1	1	1	1	1

Overview Shows the key-pressed status of key 16 (LSB) ~ key 31. Refer to Table 14-1 and Table 14-2.

Bit(s)	Mnemonic	Name	Description
15	**KEY31**	KEY31	
14	**KEY30**	KEY30	
13	**KEY29**	KEY29	

© 2015 - 2017 MediaTek Inc.

This document contains information that is proprietary to MediaTek Inc. ("MediaTek") and/or its licensor(s).
Any unauthorized use, reproduction or disclosure of this document in whole or in part is strictly prohibited.

Bit(s)	Mnemonic	Name	Description
12	**KEY28**	KEY28	
11	**KEY27**	KEY27	
10	**KEY26**	KEY26	
4	**KEY20**	KEY20	
3	**KEY19**	KEY19	
2	**KEY18**	KEY18	
1	**KEY17**	KEY17	
0	**KEY16**	KEY16	

A20D0018 KP_DEBOUNCE De-bounce Period Setting 0400

Bit	15	14	13	12	11	10	9	8	7	6	5	4	3	2	1	0
Name			DEBOUNCE													
Type			RW													
Reset			0	0	0	1	0	0	0	0	0	0	0	0	0	0

Overview Defines the waiting period before key pressing or release events are considered stable. If the de-bounce setting is too small, the keypad will be too sensitive and detect too many unexpected key presses. The suitable de-bounce time setting must be adjusted according to the user's habit.

Bit(s)	Mnemonic	Name	Description
13:0	**DEBOUNCE**	DEBOUNCE	**De-bounce time = KP_DEBOUNCE/32ms**

A20D001C KP_SCAN_TIMING Keypad Scan Timing Adjustment Register 0011

Bit	15	14	13	12	11	10	9	8	7	6	5	4	3	2	1	0
Name	COL_HIGH_PULSE				ROW_HIGH_PULSE				COL_SCAN_DIV				ROW_SCAN_DIV			
Type	RW				RW				RW				RW			
Reset	0	0	0	0	0	0	0	0	0	0	0	1	0	0	0	1

Overview Sets up the 3*3 keypad scan timing for double keypad.
Note: ROW_SCAN_DIV > ROW_ HIGH_PULSE and COL_SCAN_DIV > COL_ HIGH_PULSE. ROW_ HIGH_PULSE /COL_ HIGH_PULSE are used to lower the power consumption for it decreases the actual scan number during the de-bounce time.

Bit(s)	Mnemonic	Name	Description
15:12	**COL_HIGH_PULSE**	COL_HIGH_PULSE	**Sets up the COL SCAN high pulse, i.e. cycles of the scan high pulse** Default 0 means the high scan pulse needs 1 cycle.
11:8	**ROW_HIGH_PULSE**	ROW_HIGH_PULSE	**Sets up the ROW SCAN high pulse, i.e. cycles of the scan high pulse** Default 0 means the high scan pulse needs 1 cycle.
7:4	**COL_SCAN_DIV**	COL_SCAN_DIV	**Sets up the COL SCAN cycle which includes COL_INTERVAL_DIV and the high pulse period** Default 1 means there are 2 cycles for each scan, including 1 cycle high pulse and 1 cycle interval.
3:0	**ROW_SCAN_DIV**	ROW_SCAN_DIV	**Sets up the ROW SCAN cycle which includes ROW_INTERVAL_DIV and the high pulse period** Default 1 means there are 2 cycles for each scan, including 1 cycle high pulse and 1 cycle interval.

© 2015 - 2017 MediaTek Inc.

This document contains information that is proprietary to MediaTek Inc. ("MediaTek") and/or its licensor(s).
Any unauthorized use, reproduction or disclosure of this document in whole or in part is strictly prohibited.

A20D0020 KP_SEL Keypad Selection Register 1C70

Bit	15	14	13	12	11	10	9	8	7	6	5	4	3	2	1	0
Name	KP1_COL_SEL						KP1_ROW_SEL						DUMMY2			KP_SEL
Type	RW						RW						RW			DC
Reset	0	0	0	1	1	1	0	0	0	1	1	1	0	0	0	0

Overview For selecting: 1) To use single keypad or double keypad; 2) Which cols and rows are used when double keypad is used

Bit(s)	Mnemonic	Name	Description
15:10	**KP1_COL_SEL**	KP1_COL_SEL	**Selects which cols are used when double keypad is used** MT2523 supports maximum 3*3 double. col2, col1 and col0 can be used. 0: Disable corresponding column 1: Enable corresponding column
9:4	**KP1_ROW_SEL**	KP1_ROW_SEL	**Selects which rows are used when double keypad is used** MT2523 supports maximum 3*3 double. row2, row1 and row0 can be used. 0: Disable corresponding row 1: Enable corresponding row
3:1	**DUMMY2**	DUMMY2	
0	**KP_SEL**	KP_SEL	**Selects to use single keypad or double keypad** 0: Use single keypad 1: Use double keypad

A20D0024 KP_EN Keypad Enable Register 0001

Bit	15	14	13	12	11	10	9	8	7	6	5	4	3	2	1	0
Name																KP_EN
Type																RW
Reset																0

Overview Enables/Disables keypad.
Note: When KP_EN is set to 0, both single and double keypad registers cannot be read and written.

Bit(s)	Mnemonic	Name	Description
0	**KP_EN**	KP_EN	0: Disable keypad (Both single and double keypad will not work.) 1: Enable keypad (Either single or double keypad will work.)

© 2015 - 2017 MediaTek Inc.

This document contains information that is proprietary to MediaTek Inc. ("MediaTek") and/or its licensor(s).
Any unauthorized use, reproduction or disclosure of this document in whole or in part is strictly prohibited.

15. General Purpose Counter

15.1. General Description

General purpose counter (GP-counter) is a counter to count a pad toggle times and furthermore calculates the moving speed. It counts once the channel is enabled and provides an interrupt which will be triggered when the counter exceeds the threshold.

Depending on the pulse width from pad, you can choose suitable clock source for the GP-counter: 32kHz or 26MHz. You only have to set up **GPCOUNTER_MISC[8]: GPC_BCLK_SEL** to choose. The GP-counter will add 1 when the pluse width from pad is longer than debouce time, which is set on **GPCOUNTER_DEBOUNCE**.

GP-counter is an always on IP. When the system is in sleep mode, it still works. However, there is no 26MHz clock source in sleep mode, so users have to switch the clock source to 32kHz, which sets **GPCOUNTER_MISC[8]: GPC_BCLK_SEL** to **1'b1**.

GP-counter can trigger interrupt and wake-up events (level). You can set up EINT to capture wake-up events from GP-counter before the system enters sleep mode. Refer to EINT datasheet for more details.

15.1.1. Programming Guide

GP-counter is an always on IP. To save the most power, the software has to power down the block clock to the module. You may set up the GP-counter register before powering on the block clock. Next, set up **GPCOUNTER_CON_SET** to start counting and set **GPCOUNTER_CON_CLR** to end counting. Read **GPCOUNTER_CON** to see if GP-counter is enabled or not.

The counted data are stored in **GPCOUNTER_DATA**. Once **GPCOUNTER_DATA** is read, you may get the number and clear the counter at the same time.

Programming sequence:

1. Set up GP-Counter register: Set up clock source, interrupt enable, debounce time, and threshold.
    a. Select 32K clock source before the system enters sleep mode.
    b. Power down GP-counter block clock first then switch block clock source.
2. Power on GP-counter block clock.
3. Set up **GPCOUNTER_CON_SET** to start counting.
4. Set up **GPCOUNTER_CON_CLR** to end counting.

© 2015 - 2017 MediaTek Inc.

This document contains information that is proprietary to MediaTek Inc. ("MediaTek") and/or its licensor(s).
Any unauthorized use, reproduction or disclosure of this document in whole or in part is strictly prohibited.

15.2. Register Definition

Module name: GPCOUNTER Base address: (+A21E0000h)

Address	Name	Width	Register Function
A21E0000	GPCOUNTER_CON	32	**GPCOUNTER Control Register** Shows the GP counter status (counter enabled or not).
A21E0004	GPCOUNTER_CON_SET	32	**GPCOUNTER Control Set Register** Sets up the GP counter status (counter enabled).
A21E0008	GPCOUNTER_CON_CLR	32	**GPCOUNTER Control Clear Register** Clears the GP counter enable status (counter not enabled).
A21E000C	GPCOUNTER_MISC	32	**GPCOUNTER MISC Setting** Defines clock and interrupt, etc.
A21E0010	GPCOUNTER_DEBOUNCE	32	**GPCOUNTER De-bounce Period Setting** Defines the waiting period before PAD pressing events are considered stable. If the de-bounce setting is too small, the counter will be too sensitive and detect too many unexpected PAD presses. The suitable de-bounce time setting should be adjusted according to the user's habit.
A21E0014	GPCOUNTER_DATA	32	**GPCOUNTER Counter for Clear (Read and Clear)** Data counted by GPCOUNTER will be cleared once they are read
A21E0018	GPCOUNTER_THRESHOLD	32	**GPCOUNTER Threshold** When the counter value is bigger than or equal to GPCOUNTER Threshold, the GP counter interrupt will be triggered.
A21E001C	GPCOUNTER_INTERRUPT_STA	32	**GPCOUNTER Interrupt Status** Interrupt status

A21E0000 GPCOUNTER_CON GPCOUNTER Control Register 00000000

Bit	31	30	29	28	27	26	25	24	23	22	21	20	19	18	17	16
Name																
Type																
Reset																
Bit	15	14	13	12	11	10	9	8	7	6	5	4	3	2	1	0
Name																GPC_EN
Type																RO
Reset																0

Bit(s)	Mnemonic	Name	Description
0	GPC_EN	GPC_CH_EN	0: Not enable mode. 1: Enable mode.

A21E0004 GPCOUNTER_CON_SET GPCOUNTER Control Set Register 00000000

Bit	31	30	29	28	27	26	25	24	23	22	21	20	19	18	17	16
Name																
Type																
Reset																
Bit	15	14	13	12	11	10	9	8	7	6	5	4	3	2	1	0

© 2015 - 2017 MediaTek Inc.
This document contains information that is proprietary to MediaTek Inc. ("MediaTek") and/or its licensor(s).
Any unauthorized use, reproduction or disclosure of this document in whole or in part is strictly prohibited.

A21E0004 **GPCOUNTER_CON_SET** **GPCOUNTER Control Set Register** **00000000**

Name																**GPC_SET**
Type																WO
Reset																0

Bit(s)	Mnemonic	Name	Description
0	**GPC_SET**	GPC_SET	0: Not enable counter 1: Enable counter

A21E0008 **GPCOUNTER_CON_CLR** **GPCOUNTER Control Clear Register** **00000000**

Bit	31	30	29	28	27	26	25	24	23	22	21	20	19	18	17	16
Name																
Type																
Reset																
Bit	15	14	13	12	11	10	9	8	7	6	5	4	3	2	1	0
Name																**GPC_CLR**
Type																WO
Reset																0

Bit(s)	Mnemonic	Name	Description
0	**GPC_CLR**	GPC_CLR	0: Enable counter 1: Clear counter enabled

A21E000C **GPCOUNTER_MISC** **GPCOUNTER MISC Setting** **00010001**

Bit	31	30	29	28	27	26	25	24	23	22	21	20	19	18	17	16
Name								**GPC_INV_EN**								**GPC_INT_EN**
Type								RW								RW
Reset								0								1
Bit	15	14	13	12	11	10	9	8	7	6	5	4	3	2	1	0
Name								**GPC_BCLK_SEL**								
Type								RW								
Reset								0								

Bit(s)	Mnemonic	Name	Description
24	**GPC_INV_EN**	GPC_INV_EN	**GP-counter will detect rising edge from Pad_in toggle** 0: Detect rising edge of a toggle 1: Detect falling edge of a toggle

This document contains information that is proprietary to MediaTek Inc. ("MediaTek") and/or its licensor(s).
Any unauthorized use, reproduction or disclosure of this document in whole or in part is strictly prohibited.

Bit(s)	Mnemonic	Name	Description
			Note: Set GPC_INV_EN as the default level of signal from pad (HIGH or LOW). Once the GP-counter is disabled (GPC_CH_EN=1'b0), it will keep pad-in signal LEVEL as GPC_INV_EN, no matter the level of signal from the pad is HIGH or LOW. Issues will happen when the default level of signal from pad is different from GPC_INV_EN. For example, when GPC_INV_EN=1'b0, but the default level of signal from pad is HIGH, the GP-counter will automatically add 1 when GPC_CH_EN goes from 0 to 1.
16	**GPC_INT_EN**	GPC_INT_EN	0: For disable 1: For enable
8	**GPC_BCLK_SEL**	GPC_CLK_SEL	0: Clock from 26MHz 1: Clock from 32kHz

A21E0010 **GPCOUNTER_DEBOUNCE** **GPCOUNTER De-bounce Period Setting** **00000001**

Bit	31	30	29	28	27	26	25	24	23	22	21	20	19	18	17	16
Name																
Type																
Reset																
Bit	15	14	13	12	11	10	9	8	7	6	5	4	3	2	1	0
Name	GPC_PAD_DEB															
Type	RW															
Reset	0	0	0	0	0	0	0	0	0	0	0	0	0	0	0	1

Bit(s)	Mnemonic	Name	Description
15:0	**GPC_PAD_DEB**	GPC_DEBOUNCE	**De-bounce time = DEB_TIME*clock period** GPC_COUNTER counts according to the GP counter clock, which can be selected by register GPC_BCLK_SEL.

A21E0014 **GPCOUNTER_DATA** **GPCOUNTER Counter for Clear (Read and Clear)** **00000000**

Bit	31	30	29	28	27	26	25	24	23	22	21	20	19	18	17	16
Name	GPC_COUNTER1_DATA	GPC_COUNTER1_OVERFLOW[30:16]														
Type	RO	RO														
Reset	0	0	0	0	0	0	0	0	0	0	0	0	0	0	0	0
Bit	15	14	13	12	11	10	9	8	7	6	5	4	3	2	1	0
Name	GPC_COUNTER1_OVERFLOW[15:0]															
Type	RO															
Reset	0	0	0	0	0	0	0	0	0	0	0	0	0	0	0	0

Bit(s)	Mnemonic	Name	Description
31	**GPC_COUNTER1_**	GPC_OVERFLOW	0: Not overflow 1: Overflow

© 2015 - 2017 MediaTek Inc.
This document contains information that is proprietary to MediaTek Inc. ("MediaTek") and/or its licensor(s).
Any unauthorized use, reproduction or disclosure of this document in whole or in part is strictly prohibited.

Bit(s)	Mnemonic	Name	Description
30:0	**DATA** **GPC_COUNTER1_OVERFLOW**	GPC_COUNTER	**Data counted by GPCOUNTER (read and clear)**

A21E0018 **GPCOUNTER_THRESHOLD** **GPCOUNTER Threshold** **60000000**

Bit	31	30	29	28	27	26	25	24	23	22	21	20	19	18	17	16
Name		GPC_THRESHOLD[30:16]														
Type		RW														
Reset		1	1	0	0	0	0	0	0	0	0	0	0	0	0	0
Bit	15	14	13	12	11	10	9	8	7	6	5	4	3	2	1	0
Name	GPC_THRESHOLD[15:0]															
Type	RW															
Reset	0	0	0	0	0	0	0	0	0	0	0	0	0	0	0	0

Bit(s)	Mnemonic	Name	Description
30:0	**GPC_THRESHOLD**	GPC_THRESHOLD	**If GPC_COUNTER > GPC_THRESHOLD, IRQ request.** GPC_COUNTER counts according to the GP counter clock, which can be selected by register GPC_BCLK_SEL.

A21E001C **GPCOUNTER_INTERRUPT_STA** **GPCOUNTER Interrupt Status** **00000000**

Bit	31	30	29	28	27	26	25	24	23	22	21	20	19	18	17	16
Name																
Type																
Reset																
Bit	15	14	13	12	11	10	9	8	7	6	5	4	3	2	1	0
Name																**GPC_INT_STA**
Type																RO
Reset																0

Bit(s)	Mnemonic	Name	Description
0	**GPC_INT_STA**	GPC_INT_STA	0: Interrupt 1: No interrupt

© 2015 - 2017 MediaTek Inc.

This document contains information that is proprietary to MediaTek Inc. ("MediaTek") and/or its licensor(s).
Any unauthorized use, reproduction or disclosure of this document in whole or in part is strictly prohibited.

16. Auxiliary ADC Unit

16.1. General Description

MT2523 features one auxiliary ADC function. The auxiliary ADC unit is for identifying the plugged peripheral. The ADC function contains 8 channels for measuring external channel or internal use and a 12-bit SAR (Successive Approximation Register) ADC.

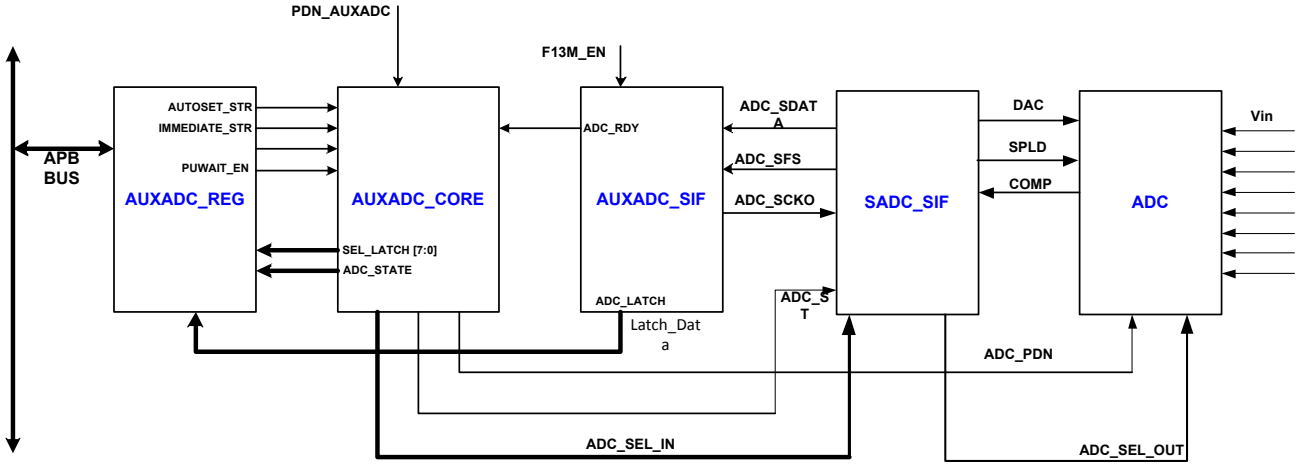

Figure 16-1. AUXADC architecture

Each channel operates in immediate mode. In immediate mode, the A/D converter samples the value once only when the flag of channel in the AUXADC_CON1 register is set. For example, if flag IMM0 in AUXADC_CON1 is set, the A/D converter will sample the data for channel 0. The IMM flags should be cleared and set again to initialize another sampling.

The value sampled for channel 0 is stored in register AUXADC_DAT0, and the value for channel 1 is stored in register AUXADC_DAT1, and so on.

If the AUTOSET flag in register AUXADC_CON3 is set, the auto-sample function will be enabled. So far, it is used in test mode only. The A/D converter samples the data for the channel in which the corresponding data register is read. For example, the AUTOSET flag is set. When the data register AUXADC_DAT0 is read, the A/D converter will sample the next value for channel 0 immediately.

If multiple channels are selected at the same time, the task will be performed sequentially on every selected channel. For example, if AUXADC_CON1 is set to 0x3f, i.e. 6 channels are selected, the state machine in the unit will start sampling from channel 5 to channel 0 and save the values of each input channel in respective registers.

© 2015 - 2017 MediaTek Inc.

This document contains information that is proprietary to MediaTek Inc. (“MediaTek”) and/or its licensor(s).
Any unauthorized use, reproduction or disclosure of this document in whole or in part is strictly prohibited.

Table 16-1. AUXADC channel description

AUXADC Channel ID	Description
Channel 6	GPDAC (test only)
Channel 7	Audio DL_HPL (internal use)
Channel 8	Audio DL_HPR (internal use)
Channel 11	External
Channel 12	External
Channel 13	External
Channel 14	External
Channel 15	External

16.2. Register Definition

Module name: AUXADC Base address: (+A0240000h)

Address	Name	Width	Register Function
A0240004	AUXADC_CON1	16	**Auxiliary ADC Control Register 1**
A024000C	AUXADC_CON3	16	**Auxiliary ADC Control Register 3**
A0240028	AUXADC_DAT6	16	**Auxiliary ADC Channel 6 Register (GPDAC)**
A024002C	AUXADC_DAT7	16	**Auxiliary ADC Channel 7 Register (Audio DL_HPL)**
A0240030	AUXADC_DAT8	16	**Auxiliary ADC Channel 8 Register (Audio DL_HPR)**
A024003C	AUXADC_DAT11	16	**Auxiliary ADC Channel 11 Register (External)**
A0240040	AUXADC_DAT12	16	**Auxiliary ADC Channel 12 Register (External)**
A0240044	AUXADC_DAT13	16	**Auxiliary ADC Channel 13 Register (External)**
A0240048	AUXADC_DAT14	16	**Auxiliary ADC Channel 14 Register (External)**
A024004C	AUXADC_DAT15	16	**Auxiliary ADC Channel 15 Register (External)**

A0240004 **AUXADC_CON1** **Auxiliary ADC Control Register 1** **0000**

Bit	15	14	13	12	11	10	9	8	7	6	5	4	3	2	1	0
Name	IMM15	IMM14	IMM13	IMM12	IMM11			IMM8	IMM7	IMM6						
Type	RW	RW	RW	RW	RW			RW	RW	RW						
Reset	0	0	0	0	0			0	0	0						

© 2015 - 2017 MediaTek Inc.
This document contains information that is proprietary to MediaTek Inc. ("MediaTek") and/or its licensor(s).
Any unauthorized use, reproduction or disclosure of this document in whole or in part is strictly prohibited.

Overview **These bits are set individually to sample the data for the corresponding channel. It supports multiple flags.**

Bit(s)	Mnemonic	Name	Description
15	**IMM15**	IMM15	**Channel 15 immediate mode** 0: The channel is not selected. 1: The channel is selected.
14	**IMM14**	IMM14	**Channel 14 immediate mode** 0: The channel is not selected. 1: The channel is selected.
13	**IMM13**	IMM13	**Channel 13 immediate mode** 0: The channel is not selected. 1: The channel is selected.
12	**IMM12**	IMM12	**Channel 12 immediate mode** 0: The channel is not selected. 1: The channel is selected.
11	**IMM11**	IMM11	**Channel 11 immediate mode** 0: The channel is not selected. 1: The channel is selected.
8	**IMM8**	IMM8	**Channel 8 immediate mode** 0: The channel is not selected. 1: The channel is selected.
7	**IMM7**	IMM7	**Channel 7 immediate mode** 0: The channel is not selected. 1: The channel is selected.
6	**IMM6**	IMM6	**Channel 6 immediate mode** 0: The channel is not selected. 1: The channel is selected.

A024000C **AUXADC_CON3** **Auxiliary ADC Control Register 3** **0010**

Bit	15	14	13	12	11	10	9	8	7	6	5	4	3	2	1	0
Name	**AUTOSET**								**SOFT_RST**							**AUXADC_STA**
Type	RW								RW							RO
Reset	0								0							0

Overview

Bit(s)	Mnemonic	Name	Description
15	**AUTOSET**	AUTOSET	**(Test mode only) Defines the auto-sample mode of the module. In auto-sample mode, each channel with its sample register read can start sampling immediately without configuring the control register AUXADC_CON1 again.**
7	**SOFT_RST**	SOFT_RST	**Software reset AUXADC state machine** 0: Normal function 1: Reset AUXADC state machine
0	**AUXADC_STA**	AUXADC_STA	**Defines the state of the module** 0: This module is idle. 1: This module is busy.

© 2015 - 2017 MediaTek Inc.
This document contains information that is proprietary to MediaTek Inc. ("MediaTek") and/or its licensor(s).
Any unauthorized use, reproduction or disclosure of this document in whole or in part is strictly prohibited.

A0240028 **AUXADC_DAT6** **Auxiliary ADC Channel 6 Register (GPDAC)** **0000**

Bit	15	14	13	12	11	10	9	8	7	6	5	4	3	2	1	0
Name					DAT6											
Type					RO											
Reset					0	0	0	0	0	0	0	0	0	0	0	0

Overview

Bit(s)	Mnemonic	Name	Description
11:0	**DAT6**	DAT6	**Sampled data for channel 6**

A024002C **AUXADC_DAT7** **Auxiliary ADC Channel 7 Register (Audio DL_HPL)** **0000**

Bit	15	14	13	12	11	10	9	8	7	6	5	4	3	2	1	0
Name					DAT7											
Type					RO											
Reset					0	0	0	0	0	0	0	0	0	0	0	0

Overview

Bit(s)	Mnemonic	Name	Description
11:0	**DAT7**	DAT7	**Sampled data for channel7**

A0240030 **AUXADC_DAT8** **Auxiliary ADC Channel 8 Register (Audio DL_HPR)** **0000**

Bit	15	14	13	12	11	10	9	8	7	6	5	4	3	2	1	0
Name					DAT8											
Type					RO											
Reset					0	0	0	0	0	0	0	0	0	0	0	0

Overview

Bit(s)	Mnemonic	Name	Description
11:0	**DAT8**	DAT8	**Sampled data for channel 8**

A024003C **AUXADC_DAT11** **Auxiliary ADC Channel 11 Register (External)** **0000**

Bit	15	14	13	12	11	10	9	8	7	6	5	4	3	2	1	0
Name					DAT11											
Type					RO											
Reset					0	0	0	0	0	0	0	0	0	0	0	0

Overview

Bit(s)	Mnemonic	Name	Description
11:0	**DAT11**	DAT11	**Sampled data for channel 11**

© 2015 - 2017 MediaTek Inc.

This document contains information that is proprietary to MediaTek Inc. ("MediaTek") and/or its licensor(s).
Any unauthorized use, reproduction or disclosure of this document in whole or in part is strictly prohibited.

A0240040 AUXADC_DAT12 Auxiliary ADC Channel 12 Register (External) 0000

Bit	15	14	13	12	11	10	9	8	7	6	5	4	3	2	1	0
Name					DAT12											
Type					RO											
Reset					0	0	0	0	0	0	0	0	0	0	0	0

Overview

Bit(s)	Mnemonic	Name	Description
11:0	**DAT12**	DAT12	**Sampled data for channel 12**

A0240044 AUXADC_DAT13 Auxiliary ADC Channel 13 Register (External) 0000

Bit	15	14	13	12	11	10	9	8	7	6	5	4	3	2	1	0
Name					DAT13											
Type					RO											
Reset					0	0	0	0	0	0	0	0	0	0	0	0

Overview

Bit(s)	Mnemonic	Name	Description
11:0	**DAT13**	DAT13	**Sampled data for channel 13**

A0240048 AUXADC_DAT14 Auxiliary ADC Channel 14 Register (External) 0000

Bit	15	14	13	12	11	10	9	8	7	6	5	4	3	2	1	0
Name					DAT14											
Type					RO											
Reset					0	0	0	0	0	0	0	0	0	0	0	0

Overview

Bit(s)	Mnemonic	Name	Description
11:0	**DAT14**	DAT14	**Sampled data for channel 14**

A024004C AUXADC_DAT15 Auxiliary ADC Channel 15 Register (External) 0000

Bit	15	14	13	12	11	10	9	8	7	6	5	4	3	2	1	0
Name					DAT15											
Type					RO											
Reset					0	0	0	0	0	0	0	0	0	0	0	0

Overview

Bit(s)	Mnemonic	Name	Description
11:0	**DAT15**	DAT15	**Sampled data for channel 15**

© 2015 - 2017 MediaTek Inc.
This document contains information that is proprietary to MediaTek Inc. ("MediaTek") and/or its licensor(s).
Any unauthorized use, reproduction or disclosure of this document in whole or in part is strictly prohibited.

16.3. Programming Guide

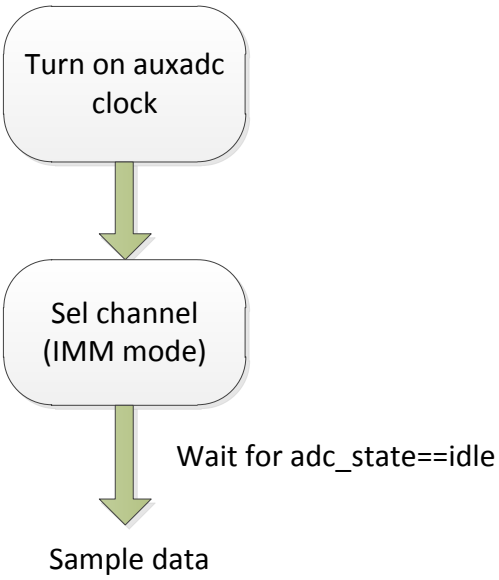

1. Immediate mode sampling is accomplished by programming AUXADC_CON1 with the channels to be sampled.
2. Sample data after selecting channel. Wait for AUXADC_CON3[0]:AUXADC_STAT changing from busy to idle. It is necessary to program AUXADC_CON1 back to 0 before sampling again
3. To do the next immediate mode, wait for 17us for per channel enable in the previous AUXADC_CON1 setting. If there are flag IMM6 and IMM7 in AUXADC_CON1, wait for 34us.

© 2015 - 2017 MediaTek Inc.

This document contains information that is proprietary to MediaTek Inc. (“MediaTek”) and/or its licensor(s).
Any unauthorized use, reproduction or disclosure of this document in whole or in part is strictly prohibited.

17. General Purpose DAC

17.1. General Description

The general purpose DAC is a fat monitor containing 128x10 SRAM in design. It outputs data from SRAM to DAC continuously at 1.083MHz and the output region from register settings.

17.2. Register Definition

Module name: GPDAC Base address: (+A21B0000h)

Address	Name	Width	Register Function
A21B0018	SWRST	16	**Soft reset**
A21B001C	OUTPUT_COMMAND	16	**Output command**
A21B0020	OUTPUT_REGION	16	**Output address region**
A21B0024	WRITE_COMMAND	32	**Write command**
A21B0050	GPDAC_SRAM_PWR	16	**SRAM power control register**

A21B0018 SWRST Soft reset 0000

Bit	15	14	13	12	11	10	9	8	7	6	5	4	3	2	1	0
Name																SWRST
Type																RW
Reset																0

Overview

Bit(s)	Name	Description
0	SWRST	**Resets all register** 0: Idle, in normal mode 1: Reset

A21B001C OUTPUT_COMMAND Output command 0010

Bit	15	14	13	12	11	10	9	8	7	6	5	4	3	2	1	0
Name												REPEAT_EN				OUTPUT_EN
Type												RW				RW
Reset												1				0

Overview

© 2015 - 2017 MediaTek Inc.
This document contains information that is proprietary to MediaTek Inc. ("MediaTek") and/or its licensor(s).
Any unauthorized use, reproduction or disclosure of this document in whole or in part is strictly prohibited.

Bit(s)	Name	Description
4	REPEAT_EN	**GPDAC is always in repeat mode; it repeats by the configuration of the OUTPUT REGION register.** 0: Stop repeat 1: GPDAC is in repeat mode (default)
0	OUTPUT_EN	**GPDAC starts to output data. If STOP is required, set output_en and repeat_en to 0.** 0: Stop output 1: Output data

A21B0020 OUTPUT_REGION Define the range of output 0000

Bit	15	14	13	12	11	10	9	8	7	6	5	4	3	2	1	0
Name		OUTPUT_END_ADDR								OUTPUT_START_ADDR						
Type		RW								RW						
Reset		0	0	0	0	0	0	0		0	0	0	0	0	0	0

Overview

Bit(s)	Name	Description
14:8	OUTPUT_END_ADDR	**Defines the range of output (end of address)**
6:0	OUTPUT_START_ADDR	**Defines the range of output (start of address)**

A21B0024 WRITE_COMMAND Write command 00000000

Bit	31	30	29	28	27	26	25	24	23	22	21	20	19	18	17	16
Name															SRAM_DATA[9:8]	
Type															RW	
Reset															0	0
Bit	15	14	13	12	11	10	9	8	7	6	5	4	3	2	1	0
Name	SRAM_DATA[7:0]									SRAM_ADDR						
Type	RW									RW						
Reset	0	0	0	0	0	0	0	0		0	0	0	0	0	0	0

Overview

Bit(s)	Name	Description
17:8	SRAM_DATA	**Write in SRAM. SRAM_data**
6:0	SRAM_ADDR	**Write in SRAM. SRAM address**

A2370050 GPDAC_SRAM_PWR SRAM power control register 000A

Bit	15	14	13	12	11	10	9	8	7	6	5	4	3	2	1	0
Name													GPDAC_SLEEPB	GPDAC_PD	GPDAC_ISOINTB	GPDAC_RET
Type													RW	RW	RW	RW
Reset													1	0	1	0

© 2015 - 2017 MediaTek Inc.

This document contains information that is proprietary to MediaTek Inc. ("MediaTek") and/or its licensor(s).
Any unauthorized use, reproduction or disclosure of this document in whole or in part is strictly prohibited.

Bit(s)	Name	Description
3	GPDAC_SLEEPB	**SRAM sleep control**
2	GPDAC_PD	**SRAM power down control**
1	GPDAC_ISOINTB	**SRAM ISO control**
0	GPDAC_RET	**SRAM retention control**

17.3. Programming Guide

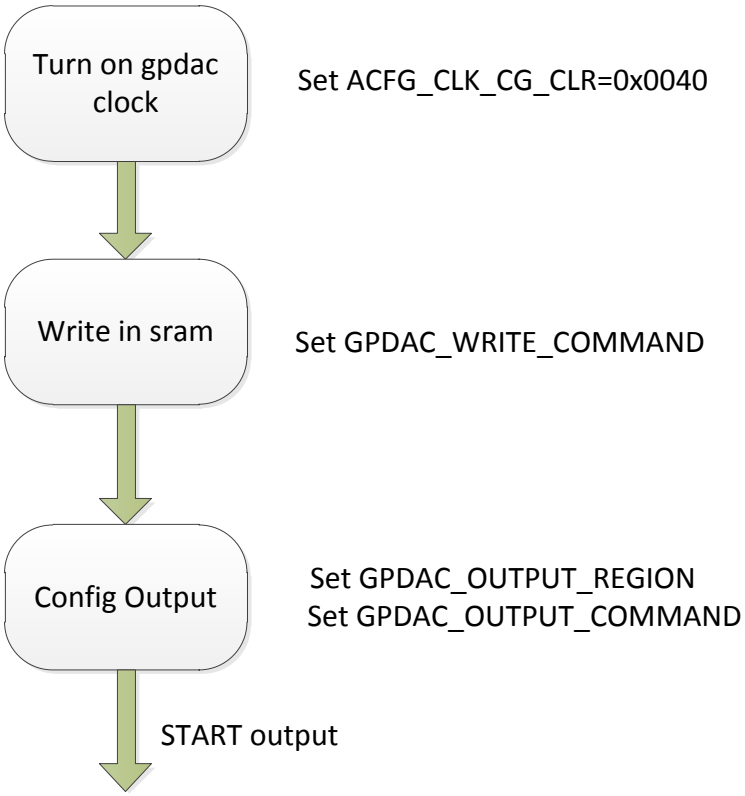

Definition of each step shown in the figure above:

1. Turn on GPDAC.
2. Write in SRAM: Write data into SRAM by register GPDAC_WRITE_COMMAND, including SRAM_ADDR and SRAM_DATA.
3. Configure output: Set up output data region by GPDAC_OUTPUT_REGION and set repeat_en (default 1) and output_en = 1 by GPDAC_OUTPUT_COMMAND.
4. Start output to DAC.
5. Stop output DAC: Set GPDAC_OUTPUT_COMMAND = 0x00. Configure output_en and repeat_en as 0.

© 2015 - 2017 MediaTek Inc.

This document contains information that is proprietary to MediaTek Inc. (“MediaTek”) and/or its licensor(s).
Any unauthorized use, reproduction or disclosure of this document in whole or in part is strictly prohibited.

17.4. Limitations and Important Notes

This section describes the limitations and some important notes on GPDAC.

17.4.1. Soft Reset

GPDAC_SWRST resets all registers expect for itself and the data in SRAM.

Set GPDAC_SWRST to 1 then set GPDAC_SWRST to 0 to complete soft reset.

17.4.2. Definition of repeat_mode and no_repeat Mode

By default repeat_en is 1. output_en = 1 will start output data as expected, and DA_GPDAC_BUS will output the data by the settings of start address and end address in GPDAC_OUTPUT_REGION continuously.

However, if repeat_en turns to 0, DA_GPDAC_BUS will still output until the setting of the end address in GPDAC_OUTPUT_REGION and output_en will become 0 automatically in the end of output.

© 2015 - 2017 MediaTek Inc.

This document contains information that is proprietary to MediaTek Inc. (“MediaTek”) and/or its licensor(s).
Any unauthorized use, reproduction or disclosure of this document in whole or in part is strictly prohibited.

18. Accessory Detector

18.1. General Description

The hardware accessory detector (ACCDET) detects plug-in/out of multiple types of external components. Based on the suggested circuit (see Figure 18-1), this design supports two types of external components, which are microphone and hook-switch. This design uses the internal 2-bit comparator to separate external components. The de-bounce scheme is also supported to resist uncertain input noises. When the plug-in/out state is stable, the PWM unit of ACCDET will enable the comparator, MBIAS and threshold voltage of the comparator periodically for the plugging detection. With suitable PWM settings, very low-power consumption can be achieved when the detection feature is enabled. To compensate the delay between the detection login and comparator, the delay enabling scheme is adopted. Given the suitable delay number compared to the rising edge of PWM high pulse, the stable plugging state can be prorogated to digital detection logic, and the correct plugging state can then be detected and reported.

Figure 18-2 shows the state machine. The state machine is executed by the software to control the ACCDET design. The ACCDET design will send one interrupt to acknowledge the software after the ACCDET input state is changed and the duration of the state is longer than de-bounce time. The software needs to read out the memorized ACCDET input state and follow the recommended state machine to program the register in it.

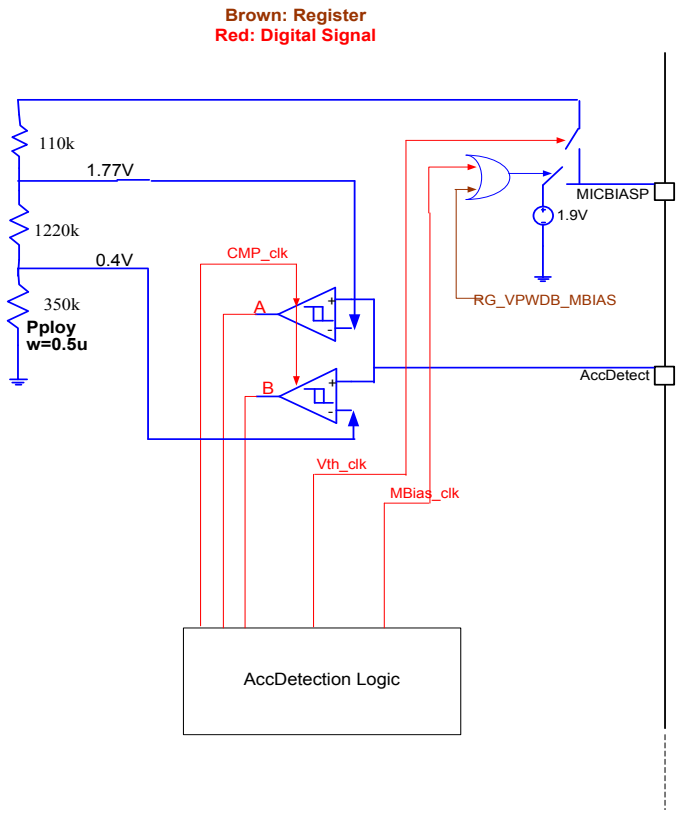

Figure 18-1. Suggested accessory detection circuit

(Note.RG_VPWDB_MBIAS = A21C0060[1])

© 2015 - 2017 MediaTek Inc.

This document contains information that is proprietary to MediaTek Inc. (“MediaTek”) and/or its licensor(s).
Any unauthorized use, reproduction or disclosure of this document in whole or in part is strictly prohibited.

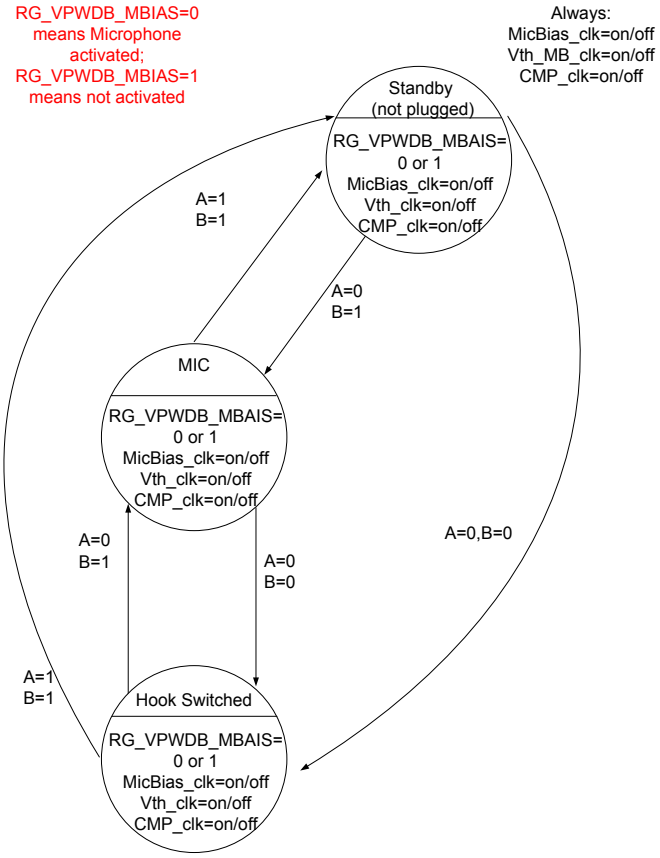

Figure 18-2. State machine between microphone and hook-switch plug-in/out change

18.1.1. Pulse Width Modulation

The ACCDET design also provides one Pulse-Width-Modulation (PWM) to enable the comparator, microphone's bias current and the threshold voltage of the comparator periodically. With suitable PWM and settings for delayed enabling, the ACCDET can achieve very low power consumption and accurate plug-in/out detection. Figure 18-3 is a timing diagram example of such PWM design. The output from PWM keeps being at 0 until the value of the counter is smaller than the programmed threshold.

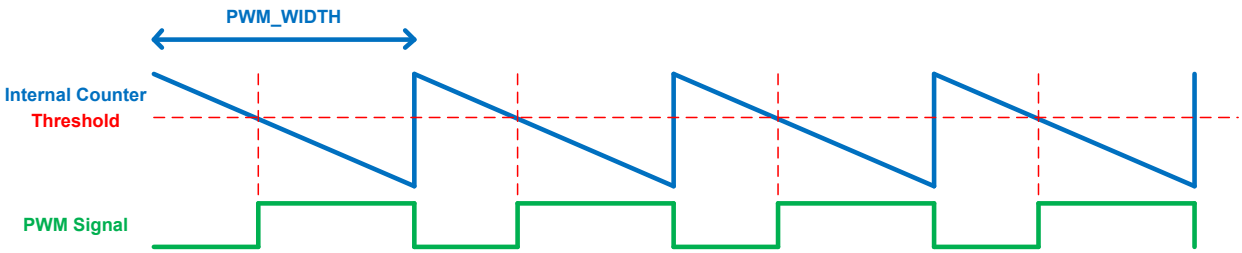

Figure 18-3. PWM waveform

This document contains information that is proprietary to MediaTek Inc. ("MediaTek") and/or its licensor(s).
Any unauthorized use, reproduction or disclosure of this document in whole or in part is strictly prohibited.

18.2. Register Definition

Module name: ACCDET Base address: (+A21F0000h)

Address	Name	Width	Register function
A21F0000	ACCDET_RSTB	32	ACCDET software reset register
A21F0004	ACCDET_CTRL	32	ACCDET control register
A21F0008	ACCDET_STATE_SWCTRL	32	ACCDET state switch control register
A21F000C	ACCDET_PWM_WIDTH	32	ACCDET PWM width register
A21F0010	ACCDET_PWM_THRESH	32	ACCDET PWM threshold register
A21F0024	ACCDET_EN_DELAY_NUM	32	ACCDET enable delay number register
A21F0028	ACCDET_PWM_IDLE_VALUE	32	ACCDET PWM IDLE value register
A21F002C	ACCDET_DEBOUNCE0	32	ACCDET debounce0 register
A21F0030	ACCDET_DEBOUNCE1	32	ACCDET debounce1 register
A21F0038	ACCDET_DEBOUNCE3	32	ACCDET debounce3 register
A21F003C	ACCDET_IRQ_STS	32	ACCDET interrupt status register
A21F0040	ACCDET_CURR_IN	32	ACCDET current input status register
A21F0044	ACCDET_SAMPLE_IN	32	ACCDET sampled input status register
A21F0048	ACCDET_MEMOIZED_IN	32	ACCDET memorized input status register
A21F004C	ACCDET_LAST_MEMOIZED_IN	32	ACCDET last memorized input status register
A21F0050	ACCDET_FSM_STATE	32	ACCDET FSM status register
A21F0054	ACCDET_CURR_DEBOUNCE	32	ACCDET current de-bounce status register
A21F0058	ACCDET_VERSION	32	ACCDET version code
A21F005C	ACCDET_IN_DEFAULT	32	Default value of accdet_in

A21F0000 ACCDET_RSTBACCDET software reset register 00000001

Bit	31	30	29	28	27	26	25	24	23	22	21	20	19	18	17	16
Mne																
Type																
Reset																
Bit	15	14	13	12	11	10	9	8	7	6	5	4	3	2	1	0
Mne																**RSTB**
Type																RW
Reset																1

Overview After applying the setting to register, software reset will be necessary for state initialization. Without this process, ACCDET may detect incorrect plug state.

© 2015 - 2017 MediaTek Inc.

This document contains information that is proprietary to MediaTek Inc. ("MediaTek") and/or its licensor(s).
Any unauthorized use, reproduction or disclosure of this document in whole or in part is strictly prohibited.

Bit(s)	Mnemonic	Name	Description
0	**RSTB**	RSTB	**Set to 0 to reset the ACCDET unit; set to 1 after the reset process is finished.** This software reset will clear ACCDET's enable signal but keep all ACCDET's settings. After the reset process, ACCDET will return to the IDLE state.

A21F0004 ACCDET_CTRL ACCDET control register 00000001

Bit	31	30	29	28	27	26	25	24	23	22	21	20	19	18	17	16
Mne																
Type																
Reset																
Bit	15	14	13	12	11	10	9	8	7	6	5	4	3	2	1	0
Mne																**ACCDET_EN**
Type																RW
Reset																0

Bit(s)	Mnemonic	Name	Description
0	**ACCDET_EN**	EN	Set to 1 to enable the ACCDET unit.

A21F0008 ACCDET_STATE_SWCTRL ACCDET state switch control register 00000001

Bit	31	30	29	28	27	26	25	24	23	22	21	20	19	18	17	16
Mne																
Type																
Reset																
Bit	15	14	13	12	11	10	9	8	7	6	5	4	3	2	1	0
Mne												**MBIAS_PWM_EN**	**VTH_PWM_EN**	**CMP_PWM_EN**		**RESERVED**
Type												RW	RW	RW		RW
Reset												0	0	0		1

Bit(s)	Mnemonic	Name	Description
4	**MBIAS_PWM_EN**	MBIAS_PWM_EN	Enables PWM of ACCDET MBIAS unit
3	**VTH_PWM_EN**	VTH_PWM_EN	Enables PWM of ACCDET voltage threshold unit
2	**CMP_PWM_EN**	CMP_PWM_EN	Enables PWM of ACCDET comparator
0	**RESERVED**	Reserved	Reserved as 1

© 2015 - 2017 MediaTek Inc.

This document contains information that is proprietary to MediaTek Inc. (“MediaTek”) and/or its licensor(s).
Any unauthorized use, reproduction or disclosure of this document in whole or in part is strictly prohibited.

A21F000C ACCDET_PWM_WIDTH ACCDET PWM width register 00000000

Bit	31	30	29	28	27	26	25	24	23	22	21	20	19	18	17	16
Mne																
Type																
Reset																
Bit	15	14	13	12	11	10	9	8	7	6	5	4	3	2	1	0
Mne	PWM_WIDTH															
Type	RW															
Reset	0	0	0	0	0	0	0	0	0	0	0	0	0	0	0	0

Bit(s)	Mnemonic	Name	Description
15:0	**PWM_WIDTH**	PWM_WIDTH	**ACCDET PWM width** It is PWM max. counter value. It will be the initial value for the internal counter. The PWM internal counter always counts down to 0 to finish one complete period, and the value of the internal counter will return to the value of PWM_WIDTH. PWM output frequency = (32k/PWM_WIDTH) Hz

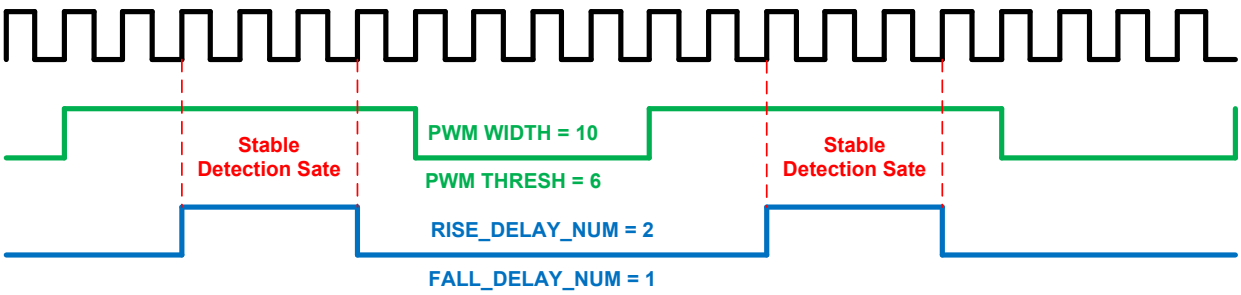

Figure 18-4. *PWM waveform with register value present*

A21F0010 ACCDET_PWM_THRESH ACCDET PWM threshold register 00000000

Bit	31	30	29	28	27	26	25	24	23	22	21	20	19	18	17	16
Mne																
Type																
Reset																
Bit	15	14	13	12	11	10	9	8	7	6	5	4	3	2	1	0
Mne	PWM_THRESH															
Type	RW															
Reset	0	0	0	0	0	0	0	0	0	0	0	0	0	0	0	0

Bit(s)	Mnemonic	Name	Description
15:0	**PWM_THRESH**	PWM_THRESH	**ACCDET PWM threshold** When the internal counter value is bigger than or equal to

© 2015 - 2017 MediaTek Inc.

This document contains information that is proprietary to MediaTek Inc. (“MediaTek”) and/or its licensor(s).
Any unauthorized use, reproduction or disclosure of this document in whole or in part is strictly prohibited.

Bit(s)	Mnemonic	Name	Description
			PWM_THRESH, the PWM output signal will be 0. When the internal counter is smaller than PWM_THRESH, the PWM output signal will be 1. PWM output duty cycle = (PWM_THRESH)x(1/32) ms

A21F0024 ACCDET_EN_DELAY_NUM ACCDET enable delay number register 00000101

Bit	31	30	29	28	27	26	25	24	23	22	21	20	19	18	17	16
Mne																
Type																
Reset																
Bit	15	14	13	12	11	10	9	8	7	6	5	4	3	2	1	0
Mne	**FALL_DELAY_NUM**	**RISE_DELAY_NUM**														
Type	RW	RW														
Reset	0	0	0	0	0	0	0	1	0	0	0	0	0	0	0	1

Bit(s)	Mnemonic	Name	Description
15	**FALL_DELAY_NUM**	FALL_DELAY_NUM	**Falling delay cycle compared to CMP PWM waveform** Suitable delay cycle is necessary for making sure the plug state is stable after ACCDET is disabled. This number indicates the clock cycle number between the point when the digital part of ACCDET stops receiving accdet_in and the point when the analog part of ACCDET stops working.
14:0	**RISE_DELAY_NUM**	RISE_DELAY_NUM	**Rising delay cycle compared to PWM waveform** Suitable delay cycle is necessary for making sure the plug state is stable before ACCDET is activated. This number indicates the clock cycle number between the point when the analog part of ACCDET starts working and the point when the digital part of ACCDET starts receiving stable accdet_in.

A21F0028 ACCDET_PWM_IDLE_VALUE ACCDET PWM IDLE value register 00000001

Bit	31	30	29	28	27	26	25	24	23	22	21	20	19	18	17	16
Mne																
Type																
Reset																
Bit	15	14	13	12	11	10	9	8	7	6	5	4	3	2	1	0
Mne														**MBIAS**	**VTH**	**CMP**
Type														RW	RW	RW
Reset														0	0	0

© 2015 - 2017 MediaTek Inc.

This document contains information that is proprietary to MediaTek Inc. ("MediaTek") and/or its licensor(s).
Any unauthorized use, reproduction or disclosure of this document in whole or in part is strictly prohibited.

Bit(s)	Mnemonic	Name	Description
2	**MBIAS**	MBIAS	IDLE value of MBIAS PWM (MBias_clk in Figure 1-1)
1	**VTH**	VTH	IDLE value of VTH PWM (Vth_clk in Figure 1-1)
0	**CMP**	CMP	IDLE value of CMP PWM (CMP_clk in Figure 1-1)

A21F002C ACCDET_DEBOUNCE0 ACCDET debounce0 register 00000010

Bit	31	30	29	28	27	26	25	24	23	22	21	20	19	18	17	16
Mne																
Type																
Reset																
Bit	15	14	13	12	11	10	9	8	7	6	5	4	3	2	1	0
Mne	**DEBOUNCE0**															
Type	RW															
Reset	0	0	0	0	0	0	0	0	0	0	0	1	0	0	0	0

Overview This register defines the waiting period before hook key press event is considered stable. If the de-bounce setting is too small, the hook key press will be too sensitive and detect too many unexpected plug-ins/outs or hook press/release events. The suitable de-bounce time setting must be adjusted according to the user's demand.

Bit(s)	Mnemonic	Name	Description
15:0	**DEBOUNCE0**	DEBOUNCE0	**De-bounce time for hook key press event (control of the next state = Hook Switch State in Figure 1-2)** De-bounce time = DEBOUNCE/32 ms

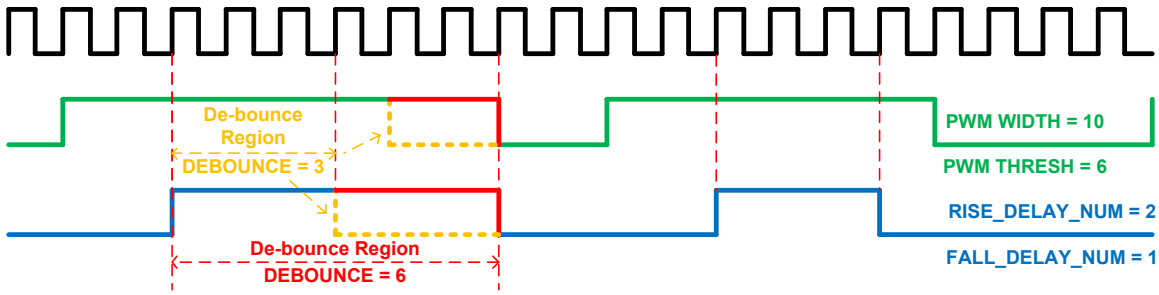

Figure 18-5. *PWM waveform with DEBOUNCE register value present*

A21F0030 ACCDET_DEBOUNCE1 ACCDET debounce1 register 00000010

Bit	31	30	29	28	27	26	25	24	23	22	21	20	19	18	17	16
Mne																
Type																
Reset																
Bit	15	14	13	12	11	10	9	8	7	6	5	4	3	2	1	0
Mne	**DEBOUNCE1**															
Type	RW															
Reset	0	0	0	0	0	0	0	0	0	0	0	1	0	0	0	0

© 2015 - 2017 MediaTek Inc.

This document contains information that is proprietary to MediaTek Inc. ("MediaTek") and/or its licensor(s).
Any unauthorized use, reproduction or disclosure of this document in whole or in part is strictly prohibited.

Overview This register defines the waiting period before plug-in is considered stable. If the de-bounce setting is too small, the plug-in will be too sensitive and detect too many unexpected plug-ins/outs or hook key press/release events. The suitable de-bounce time setting must be adjusted according to the user's demand.

Bit(s)	Mnemonic	Name	Description
15:0	**DEBOUNCE1**	DEBOUNCE1	**De-bounce time for plug-in event (control of the next state = MIC State in Figure 1-2)** De-bounce time = DEBOUNCE/32 ms

A21F0038 ACCDET_DEBOUNCE3 ACCDET debounce3 register 00000010

Bit	31	30	29	28	27	26	25	24	23	22	21	20	19	18	17	16
Mne																
Type																
Reset																
Bit	15	14	13	12	11	10	9	8	7	6	5	4	3	2	1	0
Mne	**DEBOUNCE3**															
Type	RW															
Reset	0	0	0	0	0	0	0	0	0	0	0	1	0	0	0	0

Overview This register defines the waiting period before plug-out is considered stable. If the de-bounce setting is too small, the plug-out will be too sensitive and detect too many unexpected plug-ins/outs or hook key press/release events. The suitable de-bounce time setting must be adjusted according to the user's demand.

Bit(s)	Mnemonic	Name	Description
15:0	**DEBOUNCE3**	DEBOUNCE3	**De-bounce time for plug-out event (control of the next state = Standby State in Figure 1-2)** De-bounce time = DEBOUNCE/32 ms

A21F003C ACCDET_IRQ_STS ACCDET interrupt status register 00000000

Bit	31	30	29	28	27	26	25	24	23	22	21	20	19	18	17	16
Mne																
Type																
Reset																
Bit	15	14	13	12	11	10	9	8	7	6	5	4	3	2	1	0
Mne								**IRQ_CLR**								**IRQ**
Type								RW								RO
Reset								0								0

Overview When the interrupt of ACCDET is asserted, IRQ_CLR should be set to 1 to clear the interrupt status. This bit will pause all activities in the ACCDET design until both interrupt status and IRQ_CLR are cleared. The software should write 1 to IRQ_CLR first to clear the interrupt (IRQ). After that, the software should read ACCDET_IRQ_STS again to make IRQ_CLR self-reset to 0.

This document contains information that is proprietary to MediaTek Inc. ("MediaTek") and/or its licensor(s).
Any unauthorized use, reproduction or disclosure of this document in whole or in part is strictly prohibited.

Bit(s)	Mnemonic	Name	Description
8	**IRQ_CLR**	IRQ_CLR	**Clears interrupt status of ACCDET unit**
0	**IRQ**	IRQ	**Interrupt status of ACCDET unit** Because this register will be cleared by hardware, the interrupt edge-sensitive scheme should be adopted for this design.

A21F0040 ACCDET_CURR_IN ACCDET current input status register 00000003

Bit	31	30	29	28	27	26	25	24	23	22	21	20	19	18	17	16
Mne																
Type																
Reset																
Bit	15	14	13	12	11	10	9	8	7	6	5	4	3	2	1	0
Mne															**CURR_IN**	
Type															RO	
Reset															1	1

Bit(s)	Mnemonic	Name	Description
1:0	**CURR_IN**	CURR_IN	Current input status of ACCDET unit

A21F0044 ACCDET_SAMPLE_IN ACCDET sampled input status register 00000003

Bit	31	30	29	28	27	26	25	24	23	22	21	20	19	18	17	16
Mne																
Type																
Reset																
Bit	15	14	13	12	11	10	9	8	7	6	5	4	3	2	1	0
Mne															**SAMPLE_IN**	
Type															RO	
Reset															1	1

Bit(s)	Mnemonic	Name	Description
1:0	**SAMPLE_IN**	SAMPLE_IN	**Samples input status of ACCDET unit** When the plug-in/out/hook-key state is changed, the ACCDET unit will do sampling.

A21F0048 ACCDET_MEMOIZED_IN ACCDET memorized input status register 00000003

Bit	31	30	29	28	27	26	25	24	23	22	21	20	19	18	17	16
Mne																
Type																
Reset																

© 2015 - 2017 MediaTek Inc.

This document contains information that is proprietary to MediaTek Inc. (“MediaTek”) and/or its licensor(s).
Any unauthorized use, reproduction or disclosure of this document in whole or in part is strictly prohibited.

Bit	15	14	13	12	11	10	9	8	7	6	5	4	3	2	1	0
Mne															**MEMORIZED_IN**	
Type															RO	
Reset															1	1

Bit(s)	Mnemonic	Name	Description
1:0	**MEMORIZED_IN**	MEMORIZED_IN	**Memorized input status of ACCDET unit** When the plug-in/out/hook-key states is changed and held longer than the de-bounce time, the ACCDET unit will save the sampled input state to the memorized state. The interrupt will also be asserted to acknowledge the software.

A21F004C ACCDET_LAST_MEMOIZED_IN ACCDET Last memorized input status register 00000003

Bit	31	30	29	28	27	26	25	24	23	22	21	20	19	18	17	16
Mne																
Type																
Reset																
Bit	15	14	13	12	11	10	9	8	7	6	5	4	3	2	1	0
Mne															**LAST_MEMORIZED_IN**	
Type															RO	
Reset															1	1

Bit(s)	Mnemonic	Name	Description
1:0	**LAST_MEMORIZED_IN**	LAST_MEMORIZED_IN	Last memorized input status of ACCDET unit

A21F0050 ACCDET_FSM_STATE ACCDET FSM status register 00000000

Bit	31	30	29	28	27	26	25	24	23	22	21	20	19	18	17	16
Mne																
Type																
Reset																
Bit	15	14	13	12	11	10	9	8	7	6	5	4	3	2	1	0
Mne														**FSM_STATE**		
Type														RO		
Reset														0	0	0

Bit(s)	Mnemonic	Name	Description
2:0	**FSM_STATE**	FSM_SATE	**State of ACCDET unit finite-state-machine** 0: ACCDET_IDLE 1: ACCDET_SAMPLE 2: ACCDET_DEBOUNCE

© 2015 - 2017 MediaTek Inc.

This document contains information that is proprietary to MediaTek Inc. ("MediaTek") and/or its licensor(s).
Any unauthorized use, reproduction or disclosure of this document in whole or in part is strictly prohibited.

Bit(s)	Mnemonic	Name	Description
			3: ACCDET_CHECK 4: ACCDET_MEMORIZED 5: ACCDET_IRQ

A21F0054 ACCDET_CURR_DEBOUNCE ACCDET current de-bounce status register 00000004

Bit	31	30	29	28	27	26	25	24	23	22	21	20	19	18	17	16
Mne																
Type																
Reset																
Bit	15	14	13	12	11	10	9	8	7	6	5	4	3	2	1	0
Mne	CURR_DEBOUNCE															
Type	RO															
Reset	0	0	0	0	0	0	0	0	0	0	0	1	0	0	0	0

Bit(s)	Mnemonic	Name	Description
15:0	**CURR_DEBOUNCE**	CURR_DEBOUNCE	Currently used de-bounce time setting

A21F0058 ACCDET_VERSION ACCDET version code 00000003

Bit	31	30	29	28	27	26	25	24	23	22	21	20	19	18	17	16
Name																
Type																
Reset																
Bit	15	14	13	12	11	10	9	8	7	6	5	4	3	2	1	0
Name															ACCDET_VERSION	
Type															RO	
Reset															1	1

Bit(s)	Mnemonic	Name	Description
1:0	**ACCDET_VERSION**	ACCDET_VERSION	Version code for ACCDET

A21F005C ACCDET_IN_DEFAULT Default value of accdet_in 00000000

Bit	31	30	29	28	27	26	25	24	23	22	21	20	19	18	17	16
Name																
Type																
Reset																

© 2015 - 2017 MediaTek Inc.

This document contains information that is proprietary to MediaTek Inc. ("MediaTek") and/or its licensor(s).
Any unauthorized use, reproduction or disclosure of this document in whole or in part is strictly prohibited.

Bit	15	14	13	12	11	10	9	8	7	6	5	4	3	2	1	0
Name												**ACCDET_IN_DEFAULT_REFRESH_EN**			**ACCDET_IN_DEFAULT**	
Type												RW			RW	
Reset												0			1	1

Overview The default value of sample_accdet_in and memorised_accdet_in can be set by software instead of using the default value set by hardware(i.e. 3). ACCDET_DEFAULT_REFRESH_EN is the enable bit controlling whether to use this additional function. The value of sample_accdet_in and memorized_accdet_in will change when accdet_en rises from low to high. *Note that if software reset is applied when accdet_en is high, the default value of sample_accdet_in and memorized_accdet_in will also be loaded when the software reset is de-asserted.*

Bit(s)	Mnemonic	Name	Description
4	**ACCDET_IN_DEFAULT_REFRESH_EN**	ACCDET_IN_DEFAULT_REFRESH_EN	**Enable signal for whether to load accdet_in_default** 0: accdet_in_default will not be loaded. 1: accdet_in_default will be loaded.
1:0	**ACCDET_IN_DEFAULT**	ACCDET_IN_DEFAULT	**Default value of accdet_in set by software**

© 2015 - 2017 MediaTek Inc.
This document contains information that is proprietary to MediaTek Inc. ("MediaTek") and/or its licensor(s).
Any unauthorized use, reproduction or disclosure of this document in whole or in part is strictly prohibited.

19. True Random Number Generator

19.1. General Description

The True Random Number Generator (TRNG) is a device in power-down domain that generates random numbers from a physical process. Figure 19-1 is the basic architecture. ***TRNG RO control FSM*** controls the flow of random number generation. The randomness comes from the inter-operation between various ring oscillators of which the output transition frequency is affected by PVT (process, voltage, temperature) variation. The utilized ring oscillator includes ***Hybrid Fibonacci Ring Oscillator*** (H-FIRO), ***Hybrid Ring Oscillator*** (H-RO), and ***Hybrid Galois Ring Oscillator*** (H-GARO). ***Von Neumann Extractor*** is used to balance the 0/1 occurrence of the random number. It monitors two consecutively generated random bits to determine one valid output bit; the basic rules are 00→drop, 01→1, 10→0, 11→drop. ***Error detection*** block detects if the execution time exceeds the timeout limit while enabling the Von Neumann extractor. IRQ will be issued when random number is successfully generated or timeout error occurs. Note that the generated random number is for one-time use only. Once the generated random data are acquired by CPU, TRNG data will be reset to 0. Furthermore, TRNG also supports freerun mode which turns on the ring oscillator constantly to interfere the supply voltage for security purpose.

19.1.1. Block Diagram

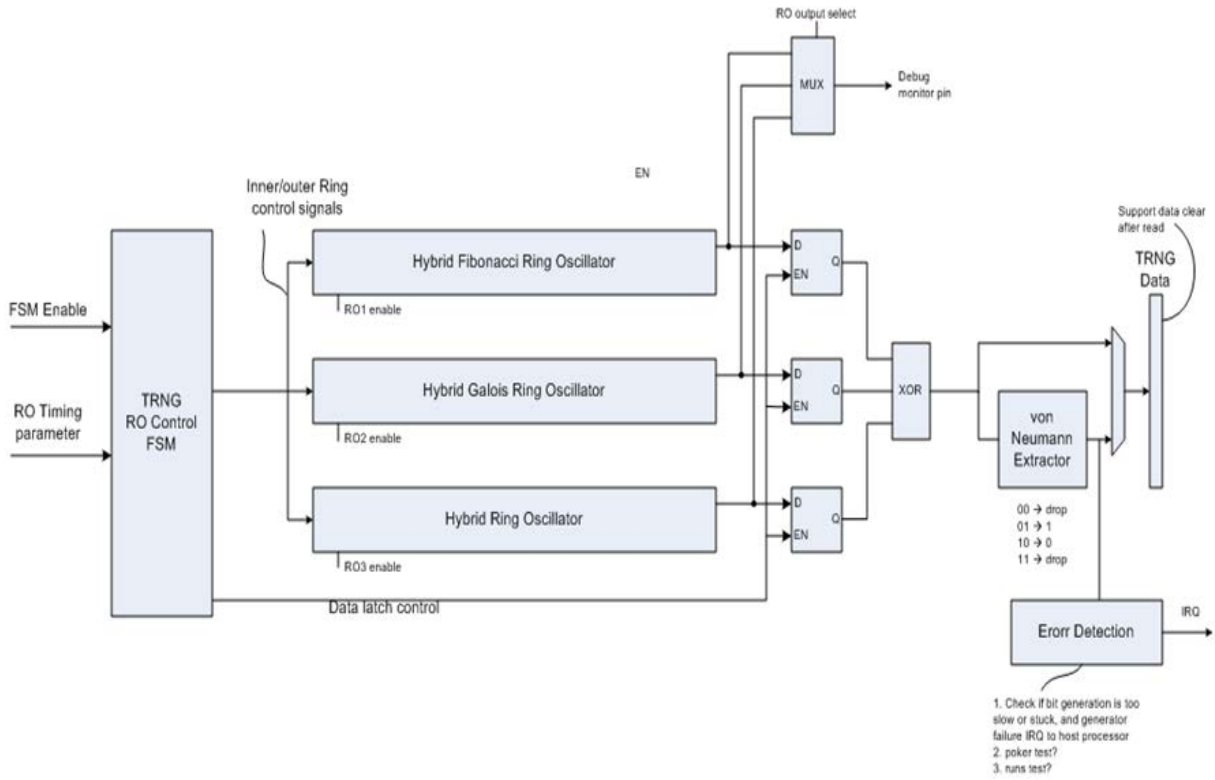

Figure 19-1. TRNG architecture

This document contains information that is proprietary to MediaTek Inc. ("MediaTek") and/or its licensor(s).
Any unauthorized use, reproduction or disclosure of this document in whole or in part is strictly prohibited.

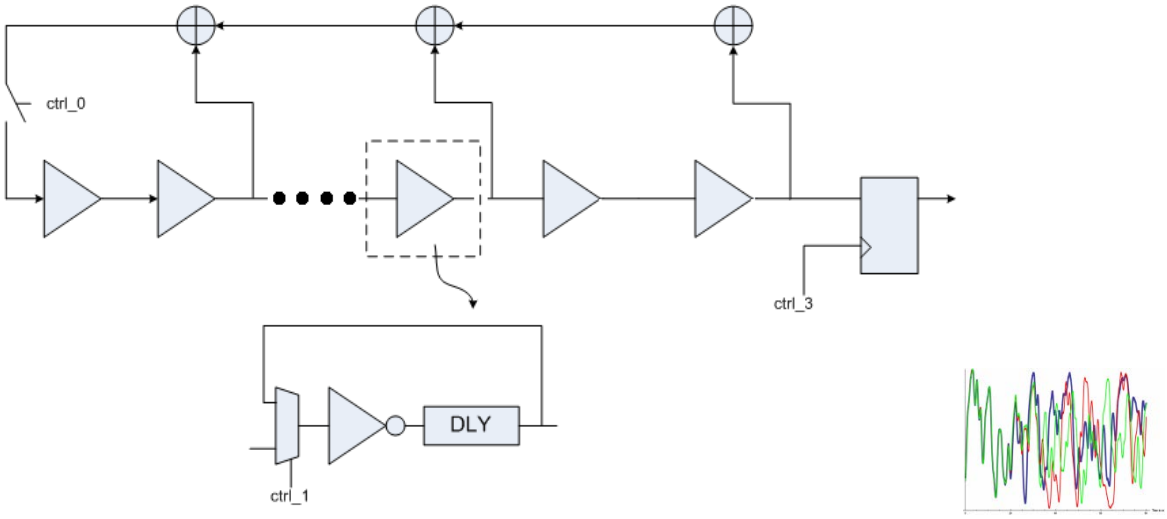

Figure 19-2. H-FIRO architecture

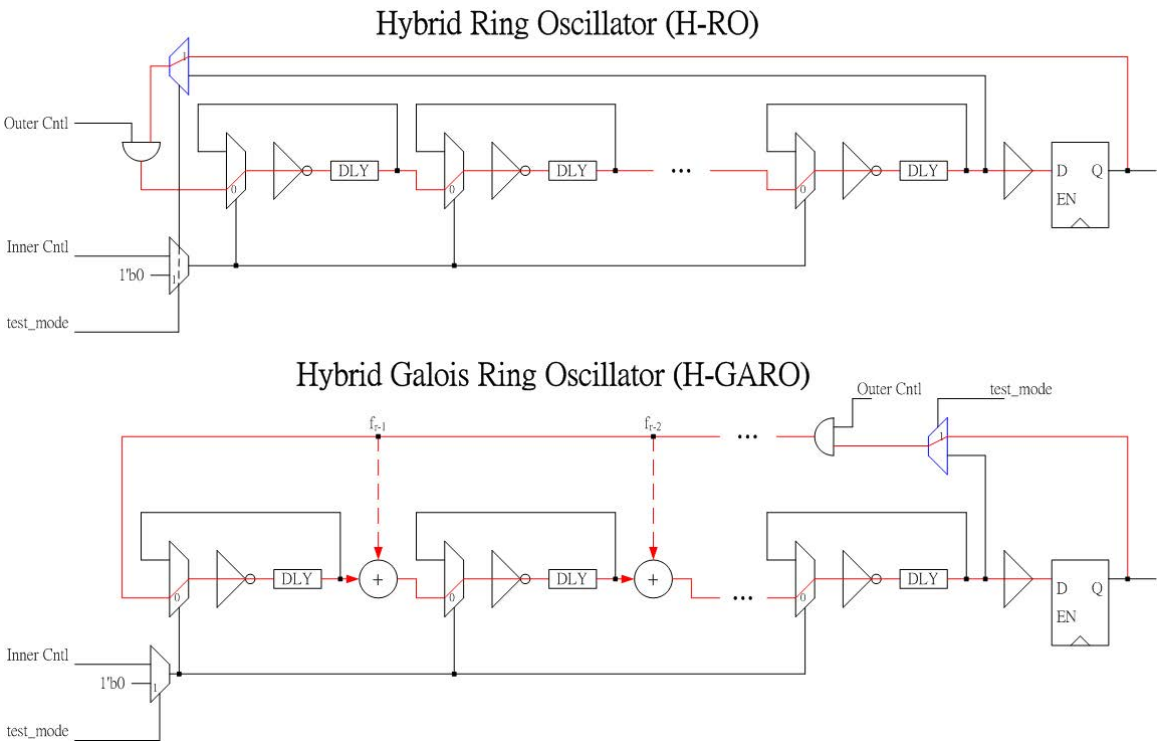

Figure 19-3. H-RO and H-GARO architecture

The polynomial used by TRNG is $x^{15} + x^{14} + x^7 + x^6 + x^5 + x^4 + x^2 + 1$. The RO operation is as the following:

1. Inner RO is closed and starts oscillating.
2. Inner RO is opened and in an unpredictable state. Outer RO is closed and starts oscillating.
3. Sample the RO data as TRNG data.

© 2015 - 2017 MediaTek Inc.
This document contains information that is proprietary to MediaTek Inc. ("MediaTek") and/or its licensor(s).
Any unauthorized use, reproduction or disclosure of this document in whole or in part is strictly prohibited.

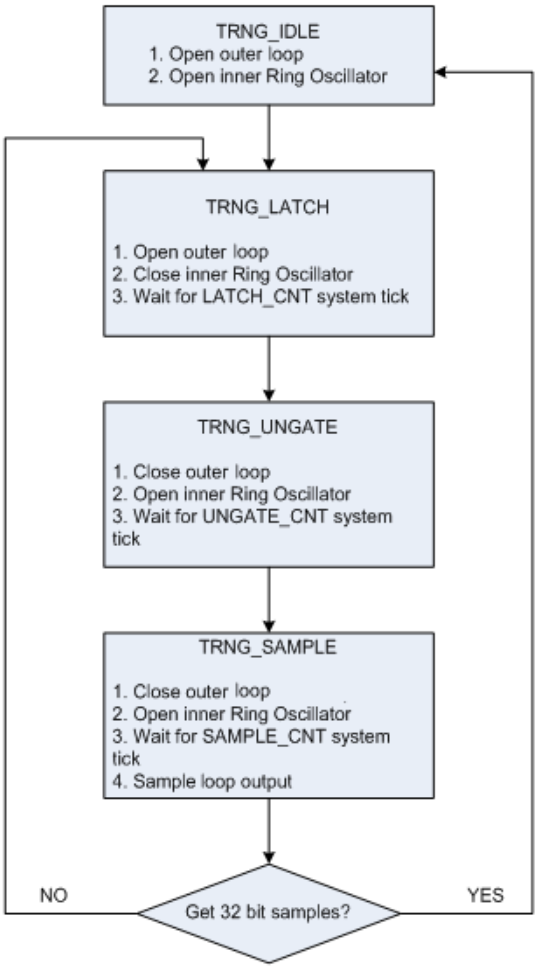

Figure 19-4. TRNG operation flow

19.2. Register Definition

TRNG control/status registers are available over APB interface. The corresponding address map is as the following.

Module name: TRNG Base address: (+A0010000h)

Address	Name	Width	Register Function
A0010000	TRNG_CTRL	32	TRNG Control Register This register controls the TRNG FSM.
A0010004	TRNG_TIME	32	TRNG Time Register This register controls the timing of internal FSM.
A0010008	TRNG_DATA	32	TRNG Data Register This register stores the random data.
A001000C	TRNG_CONF	32	TRNG Configure Register This register configures ROs, extractor setting.
A0010010	TRNG_INT_SET	32	Interrupt Setting Register This register stores the IRQ status.
A0010014	TRNG_INT_CLR	32	Interrupt Clean Register This register clears the IRQ status.

© 2015 - 2017 MediaTek Inc.

This document contains information that is proprietary to MediaTek Inc. ("MediaTek") and/or its licensor(s).
Any unauthorized use, reproduction or disclosure of this document in whole or in part is strictly prohibited.

A0010000 TRNG_CTRL TRNG Control Register 00000000

Bit	31	30	29	28	27	26	25	24	23	22	21	20	19	18	17	16
Name	TRNG_RDY															
Type	RO															
Reset	0															
Bit	15	14	13	12	11	10	9	8	7	6	5	4	3	2	1	0
Name															TRNG_FREERUN	TRNG_START
Type															RW	RW
Reset															0	0

Bit(s)	Name	Description
31	TRNG_RDY	Indicates whether the TRNG data are ready or not (software polling) 0: Random data are not ready. 1: Random data are ready.
1	TRNF_FREERUN	Turns on freerun (interference) mode 0: Disable freerun 1: Enable freerun
0	TRNG_START	Starts/terminates random number generation 0: Stop generation 1: Start generation

A0010004 TRNG_TIME TRNG Time Register 00000000

Bit	31	30	29	28	27	26	25	24	23	22	21	20	19	18	17	16
Name	SAMPLE_CNT								UNGATE_CNT							
Type	RW								RW							
Reset	0	0	0	0	0	0	1	1	0	0	0	0	1	1	1	1
Bit	15	14	13	12	11	10	9	8	7	6	5	4	3	2	1	0
Name	LATCH_CNT								SYSCLK_CNT							
Type	RW								RW							
Reset	0	0	0	0	1	0	0	0	0	0	0	0	0	0	0	1

Bit(s)	Name	Description
31:24	SAMPLE_CNT	Controls sampling time of TRNG data. Counted by TRNG SYSCLK.
23:16	UNGATE_CNT	Controls interval of TRNG inverter ungating time. Counted by TRNG SYSCLK.
15:8	LATCH_CNT	Controls interval of TRNG inverter latching time. Counted by TRNG SYSCLK.
7:0	SYSCLK_CNT	Controls frequency of TRNG SYSCLK. Counted by system bus clock (TRNG_SYSCLK = SYSTEM_BUS_CLOCK/ ***SYSCLK_CNT***)

A0010008 TRNG_DATA TRNG Data Register 00000000

Bit	31	30	29	28	27	26	25	24	23	22	21	20	19	18	17	16
Name	DATA[31:16]															
Type	RO															
Reset	0	0	0	0	0	0	0	0	0	0	0	0	0	0	0	0
Bit	15	14	13	12	11	10	9	8	7	6	5	4	3	2	1	0
Name	DATA[15:0]															
Type	RO															
Reset	0	0	0	0	0	0	0	0	0	0	0	0	0	0	0	0

Bit(s)	Name	Description
31:0	DATA	Generated random data

A001000C TRNG_CONF TRNG Configure Register 0001001C

This document contains information that is proprietary to MediaTek Inc. ("MediaTek") and/or its licensor(s).
Any unauthorized use, reproduction or disclosure of this document in whole or in part is strictly prohibited.

Bit	31	30	29	28	27	26	25	24	23	22	21	20	19	18	17	16
Name	FR_IRQ_EN														TIMEOUT_LIMIT[11:10]	
Type	RW														RW	
Reset	0														0	1
Bit	15	14	13	12	11	10	9	8	7	6	5	4	3	2	1	0
Name	TIMEOUT_LIMIT[9:0]										VON_EN	RO_EN			RO_OUT_SEL	
Type	RW										RW	RW			RW	
Reset	0	0	0	0	0	0	0	0	0	0	0	1	1	1	0	0

Bit(s)	Name	Description
31	FR_IRQ_EN	1: Enable IRQ during freerun mode 0: Disable IRQ during freerun mode
17:6	TIMEOUT_LIMIT	Configures sampling times limit when extractor is enabled If the limit is exceeded, it will issue timeout error interrupt and turn off TRNG.
5	VON_EN	1: Turn on Von-Neumann extractor 0: Turn off Von-Neumann extractor
4:2	RO_EN	Enables ring oscillator Bit[0] = 1: Enable H-FIRO Bit[1] = 1: Enable H-RO Bit[2] = 1: Enable H-GARO
1:0	RO_OUT_SEL	Selects which RO to connect to debug out 2'b00: H-FIRO 2'b01: H-RO 2'b10: H-GARO

A0010010 TRNG_INT_SET Interrupt Setting Register 00000000

Bit	31	30	29	28	27	26	25	24	23	22	21	20	19	18	17	16
Name	INT[31:16]															
Type	RO															
Reset	0	0	0	0	0	0	0	0	0	0	0	0	0	0	0	0
Bit	15	14	13	12	11	10	9	8	7	6	5	4	3	2	1	0
Name	INT[15:0]															
Type	RO															
Reset	0	0	0	0	0	0	0	0	0	0	0	0	0	0	0	0

Bit(s)	Name	Description
31:0	INT	IRQ status Bit [0] = 1: Successful random number generation Bit [1] = 1: Timeout error

A0010014 TRNG_INT_CLR Interrupt Clean Register 00000000

Bit	31	30	29	28	27	26	25	24	23	22	21	20	19	18	17	16
Name	CLR[31:16]															
Type	RW															
Reset	0	0	0	0	0	0	0	0	0	0	0	0	0	0	0	0
Bit	15	14	13	12	11	10	9	8	7	6	5	4	3	2	1	0
Name	CLR[15:0]															
Type	RW															
Reset	0	0	0	0	0	0	0	0	0	0	0	0	0	0	0	0

Bit(s)	Name	Description
31:0	CLR	Clears IRQ status by setting register to 0x0

© 2015 - 2017 MediaTek Inc.

This document contains information that is proprietary to MediaTek Inc. ("MediaTek") and/or its licensor(s).
Any unauthorized use, reproduction or disclosure of this document in whole or in part is strictly prohibited.

19.3. Programming Guide

1. Enable TRNG_CG_CLOCK.
2. Set TRNG_TIME to a proper latch/sampling period with respect to system bus clock (e.g. 0x08030F01).
3. Set TRNG_CONF TIMEOUT_LIMIT (e.g. 0xFFF).
4. Set TRNG_CONF RO_EN value (e.g. 0x7).
5. Set TRNG_CTRL[0] to 1 to start TRNG
6. Wait for IRQ or poll TRNG_CTRL[31] (TRNG_RDY).
7. Read TRNG_INT_SET to check IRQ status (bit[0] = 1: successful; bit[1] = 1: timeout).
8. Set TRNG_INT_CLR to 0x0 to clear IRQ status.
9. Set TRNG_CTRL[0] to 0 to stop TRNG.
10. If timeout, go to step 5 to regenerate random numbers.
11. If the generation is successful, read TRNG_DATA to get 32-bit random data.
12. Disable TRNG_CG_CLOCK.

Note that TRNG_TIME and TRNG_CONF (except for RO_OUT_SEL) can only be configured when TRNG is idle (TRNG_CTRL [0] = 0). Furthermore, if timeout occurs, TRNG will terminate the generation process until the user restarts TRNG.

G2D+0094h G2D Layer 0 Source Key

G2D_L0_SRC KEY

Bit	31	30	29	28	27	26	25	24	23	22	21	20	19	18	17	16
Name	**SRCKEY[31:16]**															
Type	R/W															
Reset	0															
Bit	15	14	13	12	11	10	9	8	7	6	5	4	3	2	1	0
Name	**SRCKEY[15:0]**															
Type	R/W															
Reset	0															

SRCKEY If SKEY_EN is enabled, this field represents source key color. If FONT_EN is enabled, this filed represents foreground color. If RECT_EN is enabled, this field represents the constant color for rectangle fill. The color format is the same as CLRFMT in G2D_L0_CON.

© 2015 - 2017 MediaTek Inc.

This document contains information that is proprietary to MediaTek Inc. (“MediaTek”) and/or its licensor(s).
Any unauthorized use, reproduction or disclosure of this document in whole or in part is strictly prohibited.

20. Audio Front End

20.1. General Description

The audio front end (AFE) essentially consists of voice and audio data paths. All voice band data paths comply with the GSM 03.50 specification. Mono hands-free audio or external FM radio playback paths are also provided. The audio stereo path facilitates CD-quality playback, external FM radio, and voice playback through a headset.

Figure 1-1 is the digital circuits block diagram of the audio front-end. The APB register block is an APB peripheral that stores settings from the MCU. The DSP audio port (DAP) block interfaces with the DSP for control and data communications. The digital filter block performs filter operations for voice band and audio band signal processing. The Digital Audio Interface (DAI) block communicates with the system simulator for FTA or external Bluetooth modules.

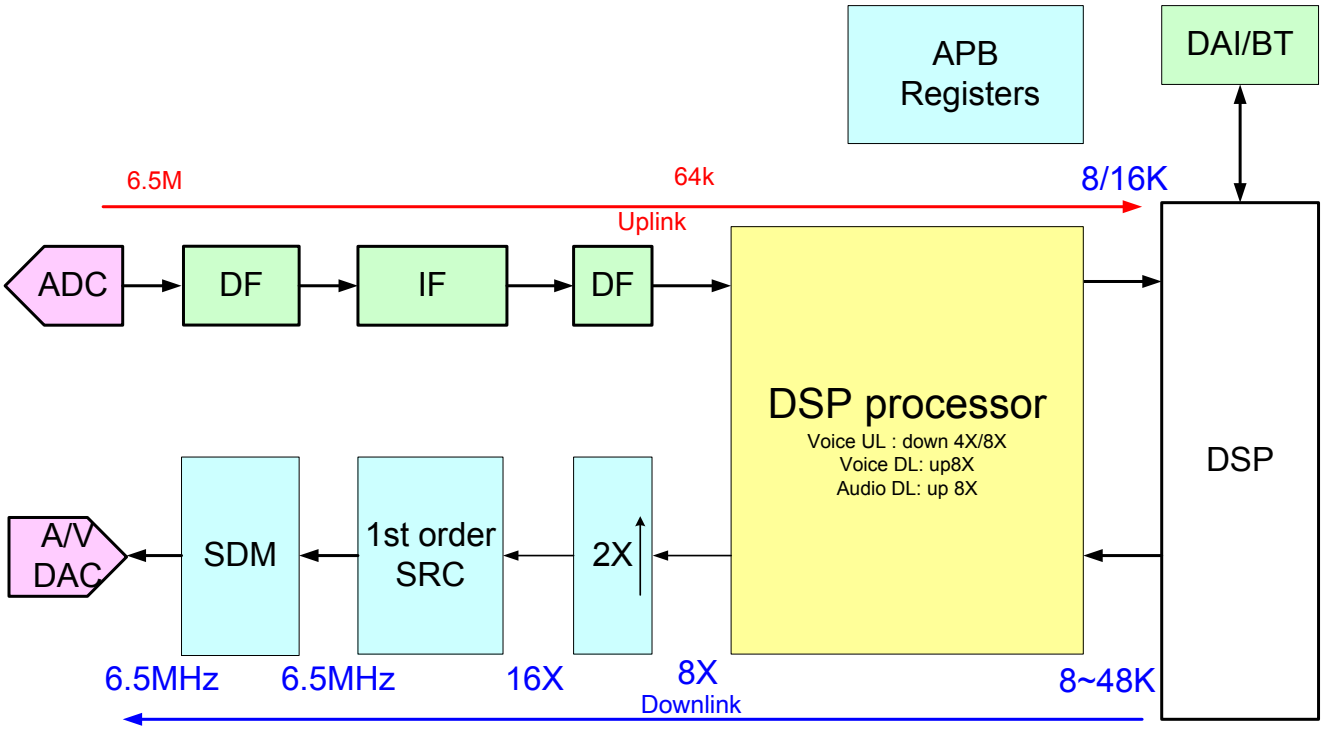

Figure 20-1. Block diagram of digital circuits of the audio front-end

To communicate with the external Bluetooth module, the master-mode PCM interface and master-mode I2S/EIAJ interface are supported. The clock of PCM interface is 256kHz while the frame sync is 8kHz. Both long sync and short sync interfaces are supported. The PCM interface can transmit 16-bit stereo or 32-bit mono 8kHz sampling rate voice signal. Figure 20-2 is the timing diagram of the PCM interface. Note that the serial data changes when the clock is rising and is latched when the clock is falling. Figure 20-3 shows the timing diagram of different clock rate PCM interface; the clock rate can be configured to 1x/2x/4x/8x of the original clock rate.

© 2015 - 2017 MediaTek Inc.

This document contains information that is proprietary to MediaTek Inc. (“MediaTek”) and/or its licensor(s).
Any unauthorized use, reproduction or disclosure of this document in whole or in part is strictly prohibited.

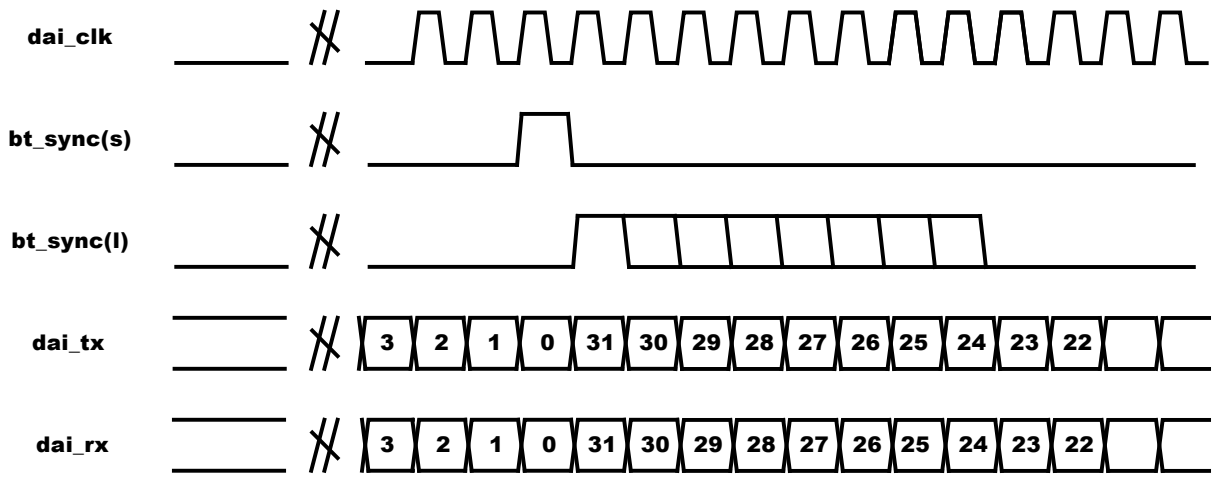

Figure 20-2. Timing diagram of Bluetooth application

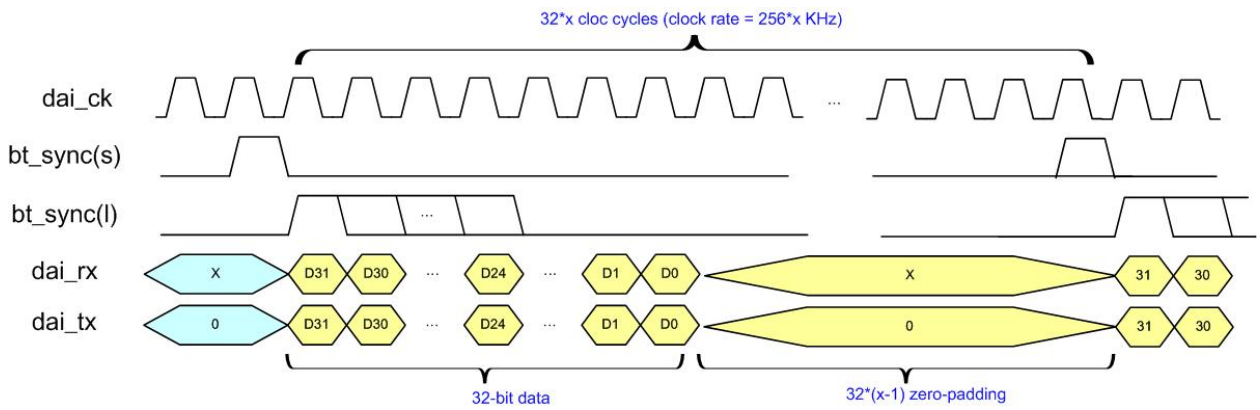

Figure 20-3. Timing diagram of different clock rate Bluetooth application

I2S/EIAJ interface is designed to transmit high quality audio data. Figure 20-4 and Figure 20-5 illustrate the timing diagram of the two types of interfaces. I2S/EIAJ can support 32 kHz, 44.1 kHz, and 48 kHz sampling rate audio signals. The clock frequency of I2S/EIAJ can be 32×(sampling frequency), or 64×(sampling frequency). For example, to transmit a 44.1 kHz CD-quality music, the clock frequency should be 32 × 44.1 kHz = 1.4112 MHz or 64 × 44.1 kHz = 2.8224 MHz.

I2S/EIAJ interface is not only used for Bluetooth module, but also for external DAC components. Audio data can easily be sent to the external DAC through the I2S/EIAJ interface.

In this document, the I2S/EIAJ interface is referred to as EDI (External DAC Interface).

© 2015 - 2017 MediaTek Inc.

This document contains information that is proprietary to MediaTek Inc. (“MediaTek”) and/or its licensor(s).
Any unauthorized use, reproduction or disclosure of this document in whole or in part is strictly prohibited.

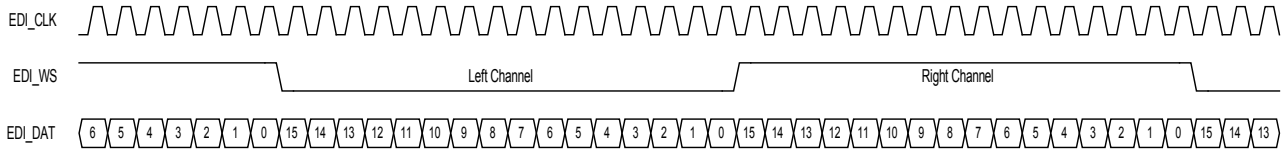

Figure 20-4. EDI Format 1: EIAJ (FMT = 0)

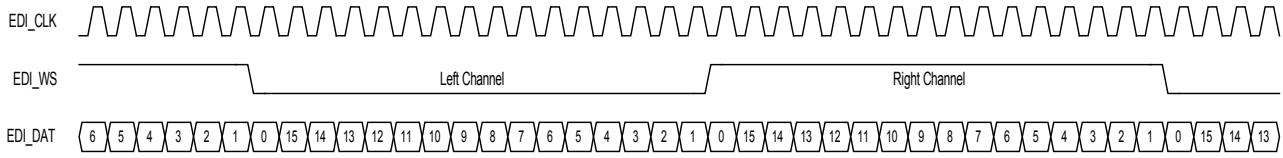

Figure 20-5. EDI Format 1: I2S (FMT = 1)

20.2. Register Definition

Registers in audio front-end are listed as the following.

Module name: AFE_A63260 Base address: (+82CD0000h)

Address	Name	Width	Register Function
82CD0000	AFE_VMCU_CON0	16	**AFE Voice MCU Control Register** A synchronous reset signal is issued before periodical interrupts of 8-kHz frequency are issued. Clearing this register will stop the interrupt generation.
82CD000C	AFE_VMCU_CON1	16	**AFE Voice MCU Control Register 1**
82CD0010	AFE_VMCU_CON2	16	**AFE Voice MCU Control Register 2** Set up this register for consistency of analog circuit setting. Suggested value: 0x003c
82CD0014	AFE_VDB_CON	16	**AFE Voice DAI Bluetooth Control Register** Set up this register for DAI test mode and Bluetooth application.
82CD0018	AFE_VLB_CON	16	**AFE Voice Loopback Mode Control Register** Set up this register for AFE voice digital circuit configuration control. Several loop back modes are implemented for test purposes. Default values correspond to the normal function mode.
82CD001C	AFE_VMCU_CON3	16	**AFE Voice MCU Control Register 3** Set up this register for voice settings.
82CD0020	AFE_AMCU_CON0	16	**AFE Audio MCU Control Register 0** A synchronous reset signal is issued before periodical interrupts of 1/6 sampling frequency are issued. Clearing this register will stop the interrupt generation.
82CD0024	AFE_AMCU_CON1	16	**AFE Audio MCU Control Register 1** MCU sets up this register to inform hardware of the sampling frequency of audio being played back.
82CD0028	AFE_EDI_CON	16	**AFE EDI Control Register** This register is used to control the EDI.
82CD002C	AFE_AMCU_CON2	16	**AFE Audio Control Register 2** Set up this register for consistency of analog circuit setting. Suggested value: 0x3c
82CD0030	AFE_DAC_TEST	16	**Audio/Voice DAC SineWave Generator**

© 2015 - 2017 MediaTek Inc.

This document contains information that is proprietary to MediaTek Inc. ("MediaTek") and/or its licensor(s).
Any unauthorized use, reproduction or disclosure of this document in whole or in part is strictly prohibited.

			This register is only for analog design verification on audio/voice DACs.
82CD0034	AFE_VAM_SET	16	**Audio/Voice Interactive Mode Setting**
82CD0038	AFE_AMCU_CON3	16	**AFE Audio Control Register 3** Set up this register for A2 parameter of pre-distortion.
82CD003C	AFE_AMCU_CON4	16	**AFE Audio Control Register 4** Set up this register for A3 parameter of pre-distortion.
82CD0040	AFE_DC_DBG_1	16	**AFE DC Compensation Debug Register 1**
82CD0044	AFE_DC_DBG_2	16	**AFE DC Compensation Debug Register 2**
82CD0048	AFE_DC_DBG_3	16	**AFE DC Compensation Debug Register 3**
82CD0140	AFE_ACHECK_SUM_R	16	**AFE Checksum Register 0**
82CD0144	AFE_ACHECK_SUM_L	16	**AFE Checksum Register 1**
82CD0148	AFE_MUTE_STA	16	**AFE Mute Status Register** This register indicates the current mute status.
82CD0180	AFE_AMCU_CON5	16	**AFE Audio MCU Control Register 5** This register sets up audio SDM selection in normal mode.
82CD0184	AFE_AMCU_CON6	16	**AFE Audio MCU Control Register 6** Set up this register for audio right channel dc offset value cancellation.
82CD0188	AFE_AMCU_CON7	16	**AFE Audio MCU Control Register 7** Set up this register for audio left channel dc offset value cancellation.
82CD0190	AFE_DBG_RD_PRE	16	**AFE MCU Debug Mode Reading SRAM Out** This register reads memory content from AFE SRAM in debug mode. It can only work when debug mode register pulls high.
82CD0194	AFE_DBG_MD_CON0	16	**AFE Debug Mode Control Register 0** Set up this register to start debug mode; the debug done signal will return in the same register.
82CD0198	AFE_DBG_MD_CON1	16	**AFE Debug Mode Control Register 1** This register reads memory content from AFE SRAM in debug mode. It can only work when debug mode register pulls high.
82CD019C	AFE_DBG_APB_STATUS	16	**AFE MCU Status Register** This register reads the status when writing/reading SRAM data or debugging.
82CD01A0	AFE_VMCU_CON4	16	**AFE Voice MCU Control Register 4** Set up this register for DC offset value cancellation.
82CD01CC	AFE_CMPR_CNTR	16	**AFE Compare Counter Control Register** Compares counter control
82CD01E0	AFE_DBG_RD_DAT	24	**AFE Debug Mode - Reading SRAM Data** When user reads memory data from memory in debug mode, the data will be here. Before read, make sure the read status is ok for read.
82CD01E4	AFE_APBMEM_RD_DAT	24	**AFE MCU Reading SRAM Data** This register reads memory content from AFE SRAM. If the read address is AFE_BASE + 1518~153C, this register will output IIR coefficient. Before read, make sure the read status is ok for read.
82CD01E8	AFE_APBMEM_RD	16	**AFE MCU Read SRAM Request** Reads AFE SRAM data from MCU
82CD01EC	AFE_PC_1X_IDX	16	**AFE Program 1X IDX**
82CD01F0	AFE_DBG_SIG	16	**AFE 8X/Buffer/Mux Debug** Debug mode signals in AFE hardware Bit [5:4] is aafe_on/vafe_on align 1x_enable signal; used for debug mode Bit [3:0] is debug signal of AFE 8X buffer.
82CD01F4	AFE_PC_OUT_DBG	16	**AFE Program PC Address**
82CD01F8	AFE_DBG_1XDAT	16	**DBG_1XDAT**

© 2015 - 2017 MediaTek Inc.

This document contains information that is proprietary to MediaTek Inc. ("MediaTek") and/or its licensor(s).
Any unauthorized use, reproduction or disclosure of this document in whole or in part is strictly prohibited.

82CD0200	**AFE_COSIM_RG**	16	**AFE COSIM RG Test**
82CD0210	**AFE_MCU_CON0**	16	**AFE MCU CON0** AFE top control register; turns on/off enable generation
82CD0214	**AFE_MCU_CON1**	16	**AFE MCU CON1** AFE data path control register; turns on/off udsp and a_interface

82CD0000 AFE_VMCU_CON0 AFE Voice MCU Control Register 0000

Bit	15	14	13	12	11	10	9	8	7	6	5	4	3	2	1	0
Name																VIRQON
Type																RW
Reset																0

Bit(s)	Mnemonic	Name	Description
0		VIRQON	**Turns on 8k interrupt** 0: Turn off 1: Turn on

82CD000C AFE_VMCU_CON1 AFE Voice MCU Control Register 1 0200

Bit	15	14	13	12	11	10	9	8	7	6	5	4	3	2	1	0
Name				DUAL_MIC		VMODE32K	VMODE4K		VRSDON							
Type				RW		RW	RW		RW							
Reset				0		0	1		0							

Bit(s)	Mnemonic	Name	Description
12		DUAL_MIC	**Dual mic control** 0: Signal mic 1: Dual mic
10		VMODE32K	**Configures uplink 32K recording** 0: See vmode4K RG 1: 32K sample rate
9		VMODE4K	**Selects DSP data mode** 0: 8K inband 1: 4K inband
7		VRSDON	**SDM level for VBITX (uplink)** 0: 2 levels 1: 3 levels

82CD0010 AFE_VMCU_CON2 AFE Voice MCU Control Register 2 003C

Bit	15	14	13	12	11	10	9	8	7	6	5	4	3	2	1	0
Name	VDC_COMP_EN				VTX_CK_PHASE						VSDM_GAIN					
Type	RW				RW						RW					

© 2015 - 2017 MediaTek Inc.

This document contains information that is proprietary to MediaTek Inc. ("MediaTek") and/or its licensor(s).
Any unauthorized use, reproduction or disclosure of this document in whole or in part is strictly prohibited.

Reset	0				0						1	1	1	1	0	0

Bit(s)	Mnemonic	Name	Description
15		VDC_COMP_EN	**Enables DC offset compensation** 0: Disable 1: Enable
11		VTX_CK_PHASE	**Selects phase selection for clock to analog** 0: Clock changes at data falling edge. 1: Clock changes at data rising edge.
5:0		VSDM_GAIN	**Gain settings at voice SDM input. Suggested value: 0x3c (60/64). Other SDM gain settings may cause performance degradation.** 000000: 0/64 000001: 1/64 111111: 63/64

82CD001C AFE_VMCU_CON3 AFE Voice MCU Control Register 3 0000

Bit	15	14	13	12	11	10	9	8	7	6	5	4	3	2	1	0
Name								SDMLP_ULTODL			VSDM_DATA_MONO	SDMLP_DLTOUL				SDM_CK_PHASE
Type								RW			RW	RW				RW
Reset								0			0	0				0

Bit(s)	Mnemonic	Name	Description
8		SDMLP_ULTODL	**UL sigma delta data loopback to DL sigma delta data** 0: Disable 1: Enable
5		VSDM_DATA_MONO	**Rch output data = Lch outut data** 0: Disable 1: Enable
4		SDMLP_DLTOUL	**DL sigma delta data loopback to UL sigma delta data** 0: Disable 1: Enable
0		SDM_CK_PHASE	**Selects phase of SDM clock** 0: Clock changes at data falling edge. 1: Clock changes at data rising edge.

82CD01A0 AFE_VMCU_CON4 AFE Voice MCU Control Register 4 0000

Bit	15	14	13	12	11	10	9	8	7	6	5	4	3	2	1	0
Name	DC_OFFSET_VALUE															
Type	RW															
Reset	0	0	0	0	0	0	0	0	0	0	0	0	0	0	0	0

Bit(s)	Mnemonic	Name	Description
15:0		DC_OFFSET_VALUE	**Set up this register for DC offset value cancellation.**

This document contains information that is proprietary to MediaTek Inc. ("MediaTek") and/or its licensor(s).
Any unauthorized use, reproduction or disclosure of this document in whole or in part is strictly prohibited.

82CD01AC **AFE_VMCU_CON5** **AFE Voice MCU Control Register 5** **0000**

Bit	15	14	13	12	11	10	9	8	7	6	5	4	3	2	1	0
Name	LCH_PHASE			RCH_PHASE			CK_PHASE					DIG_MIC_EN				D3P25M_SEL
Type	RW			RW			RW					RW				RW
Reset	011			111			0					0				0

Bit(s)	Mnemonic	Name	Description
15:13		LCH_PHASE	**Selects digital mic LCH data phase from phase 0~phase 7**
12:10		RCH_PHASE	**Selects digital mic RCH data phase from phase 0~phase 7**
9		CK_PHASE	**Selects digital mic clock latch phase (option since the L/R phase can select)**
4		DIG_MIC_EN	**Enables digital mic** 0: Enable analog mic 1: Enable digital mic
0		D3P25M_SEL	**Selects digital mic sample rate** 0: 1.625M 1: 3.25M

82CD0014 **AFE_VDB_CON** **AFE Voice DAI Bluetooth Control Register** **0000**

Bit	15	14	13	12	11	10	9	8	7	6	5	4	3	2	1	0
Name	PCM_CK_MODE			VBT_LOOP_BACK		VBT_LOOP					VDAION	VBTON	VBTSYNC	VBTSLEN		
Type	RW			RW		RW					RW	RW	RW	RW		
Reset	0	0		0		0					0	0	0	0	0	0

Bit(s)	Mnemonic	Name	Description
15:14		PCM_CK_MODE	**Pcm clock (dai_clk) rate mode** 00: 1x, dai_clk rate = dai_tx bit rate (8k*32-bit = 256kHz) 01: 2x, dai_clk rate = 2*dai_tx bit rate (512kHz) 10: 4x, dai_clk rate = 4*dai_tx bit rate (1024kHz) 11: 8x, dai_clk rate = 8*dai_tx bit rate (2048kHz)
12		VBT_LOOP_BACK	**Loop back test for DAI/BT interface. DAI_TX = DAI_RX** 0: No loopback 1: Loopback
10		VBT_LOOP	**Loop back test for DAI/BT interface** If true, dai_rx_tmp = dai_tx 0: No loopback 1: Loopback
5		VDAION	**Turns on DAI function**
4		VBTON	**Turns on Bluetooth PCM function**
3		VBTSYNC	**Bluetooth PCM frame sync type** 0: Short sync 1: Long sync
2:0		VBTSLEN	**Bluetooth PCM long frame sync length = VBTSLEN+1**

© 2015 - 2017 MediaTek Inc.

This document contains information that is proprietary to MediaTek Inc. ("MediaTek") and/or its licensor(s).
Any unauthorized use, reproduction or disclosure of this document in whole or in part is strictly prohibited.

82CD0018 AFE_VLB_CON AFE Voice Loopback Mode Control Register 0000

Bit	15	14	13	12	11	10	9	8	7	6	5	4	3	2	1	0
Name									ENGEN_OPT	VINTINSEL	VDSPBYPASS	VDSPCSMODE	VDAPIN_CH1	VDAPIN_CH0	VINTINMODE	VDECINMODE
Type									RW	RW	RW	RW	RW	RW	RW	RW
Reset									0	0	0	0	0	0	0	0

Bit(s)	Mnemonic	Name	Description
7		ENGEN_OPT	**engen generator option** 0: Origin engen 1: New engen option
6		VINTINSEL	**Selects DL data when VINTINMODE = 1** 0: 1st voice uplink input 1: 2nd voice uplink input
5		VDSPBYPASS	**Loopback data will not be gated by VDSPRDY.** 0: Normal mode 1: Bypass DSP loopback mode
4		VDSPCSMODE	**DSP COSIM only, to align DATA** 0: Normal mode 1: Cosim mode
3		VDAPIN_CH1	**MODEMSIM voice loopback control** Uplink1 data = downlink data loopback 0: Normal mode 1: Loopback mode
2		VDAPIN_CH0	**MODEMSIM voice loopback control** Uplink0 data = downlink data loopback 0: Normal mode 1: Loopback mode
1		VINTINMODE	**Downlink data = uplink data** 0: Normal mode 1: Loopback mode
0		VDECINMODE	**Decimator input mode control** Downlink output data are looped back to uplink through internal SDM. 0: Normal mode 1: Loopback mode

82CD0300 AFE_SLV_I2S_CON AFE Slave I2S Control Register 00000000

Bit	31	30	29	28	27	26	25	24	23	22	21	20	19	18	17	16
Name	SLV_I2S_EN	AFE_FOC_EN												SLV_I2S_BIT_SWAP	SLV_I2S_BYPASS_SRC	SLV_I2S_2CH_SEL
Type	RW	RW												RW	RW	RW
Reset	0	0												0	0	0
Bit	15	14	13	12	11	10	9	8	7	6	5	4	3	2	1	0
Name	SLV_I2S_MODE														SLV_I2S_FMT	SLV_I2S_PCM_SEL

© 2015 - 2017 MediaTek Inc.

This document contains information that is proprietary to MediaTek Inc. ("MediaTek") and/or its licensor(s).
Any unauthorized use, reproduction or disclosure of this document in whole or in part is strictly prohibited.

Type	R/W											RW	RW
Reset	0											0	0

Bit(s)	Mnemonic	Name	Description
31		SLV_I2S_EN	**Enables slave I2S** 0: Disable 1: Enable
30		AFE_FOC_EN	**Enables SRC function in slave I2S** 0: Disable 1: Enable
18		SLV_I2S_BIT_SWAP	**Swaps MSB 16 bits and LSB 16 bits. For backup control, keep 0 in default.** 0: No swap 1: Swap
17		SLV_I2S_BYPASS_SRC	**Bypasses SRC function in slave I2S. For backup control, keep 0 in default.** 0: No bypass 1: Bypass SRC
16		SLV_I2S_2CH_SEL	**Slave I2S nomo or stereo mode. For backup control, keep 0 in default.** 0: Speech mode, RCH = LCH data 1: Stereo mode
15:12		SLV_I2S_MODE	**Sampling frequency setting; only 8kHz and 16kHz are useful.** Others reserved 0000: 8kHz 0001: 11.025kHz 0010: 12kHz 0100: 16kHz 0101: 22.05kHz 0110: 24kHz 1000: 32kHz 1001: 44.1kHz 1010: 48kHz
1		SLV_I2S_FMT	**EDI format** 0: EIAJ 1: I2S
0		SLV_I2S_PCM_SEL	**Selects PCM or slave I2S** **UL: PCM FIFO data from PCM or slave I2S** **DL: DSP output data to PCM or slave I2S** 0: PCM 1: Slave I2S

82CD0310 AFE_FOC_TX_CON0 AFE Slave I2S TX FOC Control Register 0 5a00

Bit	15	14	13	12	11	10	9	8	7	6	5	4	3	2	1	0
Name	**FREQ_EST_MODE**	**N_STEP_MODE**	**STEP_EST_UPDATE_LV**						**MON**				**STEP_LIM_MODE**	**PTR_TARACK_EM**		**RT_EN**
Type	R/W	R/W	R/W						RW				RW	RW		RW
Reset	0	1	011010						0000				0	0		0

Bit(s)	Mnemonic	Name	Description
15		FREQ_EST_MODE	**Frequency offset estimation mode** 0: In 512 cycles

This document contains information that is proprietary to MediaTek Inc. ("MediaTek") and/or its licensor(s).
Any unauthorized use, reproduction or disclosure of this document in whole or in part is strictly prohibited.

		1: In 1024 cycles
14	N_STEP_MODE	**Controls the reference for step_change** 0: Refer to step 1: Refer to step_target
13:8	STEP_EST_UPDATE_LV	**Controls step update threshold for frequency tracking** 0~63
7:4	MON	**Selects data monitor** Only used in debug mode. Keep at 0000 in normal mode.
3	STEP_LIM_MODE	**Controls maximum tracking frequency offset** 0: 270 ppm 1: 540 ppm
2	PTR_TRACK_EN	**Controls the enable signal to tracking frequency when pointer difference changes** 0: Disable 1: Enable
0	FT_EN	**Controls the enable signals for frequency tracking** Note: Remember to open SRC and I2S before starting frequency tracking. 0: No frequency tracking 1: Frequency tracking on

82CD0314 AFE_FOC_TX_CON1 AFE Slave I2S TX FOC Control Register 1 0000

Bit	15	14	13	12	11	10	9	8	7	6	5	4	3	2	1	0
Name	MANUAL			STEP_MANUAL												
Type	R/W			RW												
Reset	0			0_0000_0000_0000												

Bit(s)	Mnemonic	Name	Description
15		MANUAL	**Controls frequency tracking mode** 0: Auto-tracking 1: Manual mode
12:0		STEP_MANUAL	**step_manual = frequency offset (ppm)/step_ini.**

82CD0318 AFE_FOC_TX_CON2 AFE Slave I2S TX FOC Control Register 2 1589

Bit	15	14	13	12	11	10	9	8	7	6	5	4	3	2	1	0
Name	N_STEP_JUMP_CON3				N_STEP_JUMP_CON2				N_STEP_JUMP_CON1				N_STEP_JUMP_CON0			
Type	R/W				R/W				R/W				R/W			
Reset	0001				0101				1000				1001			

Bit(s)	Mnemonic	Name	Description
15:12		N_STEP_JUMP_CON3	**Controls input samples to change step when step change is larger than power (2, step_change_con3)**
11:8		N_STEP_JUMP_CON2	**Controls input samples to change step when step change is smaller than power (2, step_change_con2)**
7:4		N_STEP_JUMP_CON1	**Controls input samples to change step when step change is smaller than power (2, step_change_con1)**
3:0		N_STEP_JUMP_CON0	**Controls input samples to change step when step change is smaller than power (2, step_change_con0)**

© 2015 - 2017 MediaTek Inc.

This document contains information that is proprietary to MediaTek Inc. ("MediaTek") and/or its licensor(s).
Any unauthorized use, reproduction or disclosure of this document in whole or in part is strictly prohibited.

82CD031C AFE_FOC_TX_CON3 AFE Slave I2S TX FOC Control Register 3 0034

Bit	15	14	13	12	11	10	9	8	7	6	5	4	3	2	1	0
Name						STEP_CHANGE_CON0										
Type						R/W										
Reset						000_0011_0100										

Bit(s)	Mnemonic	Name	Description
10:0		STEP_CHANGE_CON0	**Controls boundary between N_STEP_JUMP0 and N_STEP_JUMP1**

82CD0320 AFE_FOC_TX_CON4 AFE Slave I2S TX FOC Control Register 4 0067

Bit	15	14	13	12	11	10	9	8	7	6	5	4	3	2	1	0
Name						STEP_CHANGE_CON1										
Type						R/W										
Reset						000_0110_0111										

Bit(s)	Mnemonic	Name	Description
10:0		STEP_CHANGE_CON1	**Controls boundary between N_STEP_JUMP1 and N_STEP_JUMP2**

82CD0324 AFE_FOC_TX_CON5 AFE Slave I2S TX FOC Control Register 5 019a

Bit	15	14	13	12	11	10	9	8	7	6	5	4	3	2	1	0
Name						STEP_CHANGE_CON2										
Type						R/W										
Reset						001_1001_1010										

Bit(s)	Mnemonic	Name	Description
10:0		STEP_CHANGE_CON2	**Controls boundary between N_STEP_JUMP2 and N_STEP_JUMP3**

82CD0330 AFE_FOC_RX_CON0 AFE Slave I2S RX FOC Control Register 0 5a00

Bit	15	14	13	12	11	10	9	8	7	6	5	4	3	2	1	0
Name	FREQ_EST_MODE	N_STEP_MODE	STEP_EST_UPDATE_LV						MON				STEP_LIM_MODE	PTR_TARACK_EM		RT_EN
Type	R/W	R/W	R/W						RW				RW	RW		RW
Reset	0	1	011010						0000				0	0		0

© 2015 - 2017 MediaTek Inc.
This document contains information that is proprietary to MediaTek Inc. ("MediaTek") and/or its licensor(s).
Any unauthorized use, reproduction or disclosure of this document in whole or in part is strictly prohibited.

Bit(s)	Mnemonic	Name	Description
15		FREQ_EST_MODE	**Frequency offset estimation mode** 0: In 512 cycles 1: In 1024 cycles
14		N_STEP_MODE	**Controls reference for step_change.** 0: Refer to step 1: Refer to step_target
13:8		STEP_EST_UPDATE_LV	**Controls step update threshold for frequency tracking** 0~63
7:4		MON	**Selects data monitor** Only used in debug mode. Keep 0000 in normal mode.
3		STEP_LIM_MODE	**This bit controls the maximum tracking frequency offset.** 0: 270 ppm 1: 540 ppm
2		PTR_TRACK_EN	**Controls the enable signal to tracking frequency when pointer difference changes** 0: Disable 1: Enable
0		FT_EN	**Controls the enable signals for frequency tracking** Note: Remember to open SRC and I2S before starting frequency tracking. 0: No frequency tracking 1: Frequency tracking on

82CD0334 **AFE_FOC_RX_CON1** **AFE Slave I2S RX FOC Control Register 1** **0000**

Bit	15	14	13	12	11	10	9	8	7	6	5	4	3	2	1	0
Name	MANUAL			STEP_MANUAL												
Type	R/W			RW												
Reset	0			0_0000_0000_0000												

Bit(s)	Mnemonic	Name	Description
15		MANUAL	**Controls frequency tracking mode** 0: Auto-tracking 1: Manual mode
12:0		STEP_MANUAL	**step_manual = frequency offset (ppm)/step_ini.**

82CD0338 **AFE_FOC_RX_CON2** **AFE Slave I2S RX FOC Control Register 2** **1589**

Bit	15	14	13	12	11	10	9	8	7	6	5	4	3	2	1	0
Name	N_STEP_JUMP_CON3				N_STEP_JUMP_CON2				N_STEP_JUMP_CON1				N_STEP_JUMP_CON0			
Type	R/W				R/W				R/W				R/W			
Reset	0001				0101				1000				1001			

Bit(s)	Mnemonic	Name	Description
15:12		N_STEP_JUMP_CO	**Controls input samples to change step when step change is larger**

© 2015 - 2017 MediaTek Inc.
This document contains information that is proprietary to MediaTek Inc. ("MediaTek") and/or its licensor(s).
Any unauthorized use, reproduction or disclosure of this document in whole or in part is strictly prohibited.

	N3	**than power (2, step_change_con3)**
11:8	N_STEP_JUMP_CON2	**Controls input samples to change step when step change is smaller than power (2, step_change_con2)**
7:4	N_STEP_JUMP_CON1	**Controls input samples to change step when step change is smaller than power (2, step_change_con1)**
3:0	N_STEP_JUMP_CON0	**Controls input samples to change step when step change is smaller than power (2, step_change_con0)**

82CD033C **AFE_FOC_RX_CON3** **AFE Slave I2S RX FOC Control Register 3** **0034**

Bit	15	14	13	12	11	10	9	8	7	6	5	4	3	2	1	0
Name						STEP_CHANGE_CON0										
Type						R/W										
Reset						000_0011_0100										

Bit(s)	Mnemonic	Name	Description
10:0		STEP_CHANGE_CON0	**Controls boundary between N_STEP_JUMP0 and N_STEP_JUMP1**

82CD034O **AFE_FOC_RX_CON4** **AFE Slave I2S RX FOC Control Register 4** **0067**

Bit	15	14	13	12	11	10	9	8	7	6	5	4	3	2	1	0
Name						STEP_CHANGE_CON1										
Type						R/W										
Reset						000_0110_0111										

Bit(s)	Mnemonic	Name	Description
10:0		STEP_CHANGE_CON1	**Controls boundary between N_STEP_JUMP1 and N_STEP_JUMP2**

82CD0344 **AFE_FOC_RX_CON5** **AFE Slave I2S RX FOC Control Register 5** **019a**

Bit	15	14	13	12	11	10	9	8	7	6	5	4	3	2	1	0
Name						STEP_CHANGE_CON2										
Type						R/W										
Reset						001_1001_1010										

Bit(s)	Mnemonic	Name	Description
10:0		STEP_CHANGE_CON2	**Controls boundary between N_STEP_JUMP2 and N_STEP_JUMP3**

© 2015 - 2017 MediaTek Inc.

This document contains information that is proprietary to MediaTek Inc. ("MediaTek") and/or its licensor(s).
Any unauthorized use, reproduction or disclosure of this document in whole or in part is strictly prohibited.

82CD0020 **AFE_AMCU_CON0** **AFE Audio MCU Control Register 0** **0000**

Bit	15	14	13	12	11	10	9	8	7	6	5	4	3	2	1	0
Name																AIRQON
Type																RW
Reset																0

Bit(s)	Mnemonic	Name	Description
0		AIRQON	**Turns on audio interrupt operation** 0: Turn off 1: Turn on

82CD0024 **AFE_AMCU_CON1** **AFE Audio MCU Control Register 1** **0C00**

Bit	15	14	13	12	11	10	9	8	7	6	5	4	3	2	1	0
Name		MONO_SEL		i2s_1xout_sel			AFS				ARAMPSP		AMUTER	AMUTEL		
Type		RW		RW			RW				RW		RW	RW		
Reset		0		0			0	0	0	0	0	0	0	0		

Bit(s)	Mnemonic	Name	Description
14		MONO_SEL	**Selects mono mode** AFE HW will do "(left + right)/2" operation to the audio sample pair. Thus both right and left channel DAC will have the same inputs. 0: Normal function 1: Enable mono mode
12		i2s_1xout_sel	**1X data to I2S means data from DSP FIFO and do not pass ASP** 0: Normal mode 1: Audio 1x data to I2S
9:6		AFS	**Sampling frequency setting** Others reserved 0000: 8kHz 0001: 11.025kHz 0010: 12kHz 0100: 16kHz 0101: 22.05kHz 0110: 24kHz 1000: 32kHz 1001: 44.1kHz 1010: 48kHz
5:4		ARAMPSP	**Selects ramp up/down speed** 00: 8, 4096/AFS 01: 16, 2048/AFS 10: 24, 1024/AFS 11: 32, 512/AFS
3		AMUTER	**Mute the audio R-channel, with soft ramp up/down** 0: No mute 1: Turn on mute function
2		AMUTEL	**Mutes audio L-channel, with soft ramp up/down** 0: No mute 1: Turn on mute function

© 2015 - 2017 MediaTek Inc.

This document contains information that is proprietary to MediaTek Inc. ("MediaTek") and/or its licensor(s).
Any unauthorized use, reproduction or disclosure of this document in whole or in part is strictly prohibited.

82CD002C **AFE_AMCU_CON2** **AFE Audio Control Register 2** **003C**

Bit	15	14	13	12	11	10	9	8	7	6	5	4	3	2	1	0
Name	ADC_COMP_EN	EDI_WS_OPTION				PREDIT_EN				EDI_SEL	ASDM_GAIN					
Type	RW	RW				RW				RW	RW					
Reset	0	0				0				0	1	1	1	1	0	0

Bit(s)	Mnemonic	Name	Description
15		ADC_COMP_EN	**Enables DC offset compensation** 0: Disable 1: Enable
14		EDI_WS_OPTION	**Optional setting for I2S** Do not touch the bit.
10		PREDIT_EN	**Enables pre-distortion function** No use now 0: Disable 1: Enable
6		EDI_SEL	**Feeds EDI input data to audio filter directly** 0: Audio data come from DSP. 1: Audio data come from EDI input.
5:0		ASDM_GAIN	**Gain settings at audio SDM input** Suggested value: 0x3c (60/64). Other SDM gain settings may cause performance degradation. 000000: 0/64 000001: 1/64 111111: 63/64

82CD0038 **AFE_AMCU_CON3** **AFE Audio Control Register 3** **0000**

Bit	15	14	13	12	11	10	9	8	7	6	5	4	3	2	1	0
Name					PRE_A2											
Type					RW											
Reset					0	0	0	0	0	0	0	0	0	0	0	0

Bit(s)	Mnemonic	Name	Description
11:0		PRE_A2	**A2 parameter for pre-distortion**

82CD003C **AFE_AMCU_CON4** **AFE Audio Control Register 4** **0000**

Bit	15	14	13	12	11	10	9	8	7	6	5	4	3	2	1	0
Name					PRE_A3											
Type					RW											
Reset					0	0	0	0	0	0	0	0	0	0	0	0

Bit(s)	Mnemonic	Name	Description
11:0		PRE_A3	**A3 parameter for pre-distortion**

© 2015 - 2017 MediaTek Inc.

This document contains information that is proprietary to MediaTek Inc. ("MediaTek") and/or its licensor(s).
Any unauthorized use, reproduction or disclosure of this document in whole or in part is strictly prohibited.

82CD0180 AFE_AMCU_CON5 AFE Audio MCU Control Register 5 0000

Bit	15	14	13	12	11	10	9	8	7	6	5	4	3	2	1	0
Name								SDMLP_ULTODL			ASDM_DATA_MONO	SDMLP_DLTOUL				SDM_CK_PHASE
Type								RW			RW	RW				RW
Reset								0			0	0				0

Bit(s)	Mnemonic	Name	Description
8		SDMLP_ULTODL	**UL sigma delta data loopback to DL sigma delta data** 0: Disable 1: Enable
5		ASDM_DATA_MONO	**Rch output data = Lch outut data** 0: Disable 1: Enable
4		SDMLP_DLTOUL	**DL sigma delta data loopback to UL sigma delta data** 0: Disable 1: Enable
0		SDM_CK_PHASE	**Selects phase of SDM clock** 0: Clock changes at data falling edge. 1: Clock changes at data rising edge.

82CD0184 AFE_AMCU_CON6 AFE Audio MCU Control Register 6 0000

Bit	15	14	13	12	11	10	9	8	7	6	5	4	3	2	1	0
Name	RCH_AUDIO_DC_OFFSET_VALUE															
Type	RW															
Reset	0	0	0	0	0	0	0	0	0	0	0	0	0	0	0	0

Bit(s)	Mnemonic	Name	Description
15:0		RCH_AUDIO_DC_OFFSET_VALUE	**Set up this register for audio right channel DC offset value cancellation.**

82CD0188 AFE_AMCU_CON7 AFE Audio MCU Control Register 7 0000

Bit	15	14	13	12	11	10	9	8	7	6	5	4	3	2	1	0
Name	LCH_AUDIO_DC_OFFSET_VALUE															
Type	RW															
Reset	0	0	0	0	0	0	0	0	0	0	0	0	0	0	0	0

Bit(s)	Mnemonic	Name	Description
15:0		LCH_AUDIO_DC_OFFSET_VALUE	**Set up this register for audio left channel DC offset value cancellation.**

© 2015 - 2017 MediaTek Inc.

This document contains information that is proprietary to MediaTek Inc. ("MediaTek") and/or its licensor(s).
Any unauthorized use, reproduction or disclosure of this document in whole or in part is strictly prohibited.

82CD0028 **AFE_EDI_CON** **AFE EDI Control Register** **003C**

Bit	15	14	13	12	11	10	9	8	7	6	5	4	3	2	1	0
Name	EN2	UL_TOI2SDSP	I2S_OUT_MODE			ULTOEDI	EDI_LPBK_MODE	DIR		WCYCLE					FMT	EN
Type	RW	RW	RW			RW	RW	RW		RW					RW	RW
Reset	0	0	0	0		0	0	0		0	1	1	1	1	0	0

Bit(s)	Mnemonic	Name	Description
15		EN2	**Enables EDI PAD output** Only for master output mode. 0: Disable EDI PAD output 1: Enable EDI PAD output
14		UL_TOI2SDSP	**For 32K recording; uplink data should go to dsp_i2s port** 0: UL data do not go to dsp_i2s port. 1: UL data go to dsp_i2s port.
13:12		I2S_OUT_MODE	**I2S output mode** 00: 1X output 01: 2X output 10: 4X output
10		ULTOEDI	**Uplink data to I2S** 0: Disable 1: Enable
9		EDI_LPBK_MODE	**Control loopback mode: EDI_RX = EDI_TX** 0: Normal mode 1: Loopback mode
8		DIR	**Serial data bit direction** 0: Only output mode active. Audio data are fed out to the external device. 1: Both input mode and output mode are active.
6:2		WCYCLE	**Clock cycle count in a word** Cycle count = WCYCLE + 1; and WCYCLE can only be 15 or 31. Any other values will result in unpredictable errors. 15: Cycle count is 16. 31: Cycle count is 32.
1		FMT	**EDI format** 0: EIAJ 1: I2S
0		EN	**Enables EDI** When EDI is disabled, EDI_DAT and EDI_WS will hold low. 0: Disable EDI 1: Enable EDI

82CD0030 **AFE_DAC_TEST** **Audio/Voice DAC SineWave Generator** **0701**

Bit	15	14	13	12	11	10	9	8	7	6	5	4	3	2	1	0
Name	VON	AON	MUTE			AMP_DIV			FREQ_DIV							
Type	RW	RW	RW			RW			RW							
Reset	0	0	0			1	1	1	0	0	0	0	0	0	0	1

Bit(s)	Mnemonic	Name	Description
15		VON	**Makes voice DAC output the test sine wave** 0: Voice DAC inputs are normal voice samples.

© 2015 - 2017 MediaTek Inc.

This document contains information that is proprietary to MediaTek Inc. ("MediaTek") and/or its licensor(s).
Any unauthorized use, reproduction or disclosure of this document in whole or in part is strictly prohibited.

		1: Voice DAC inputs are sine waves.
14	AON	**Makes audio DAC output the test sine wave** 0: Audio DAC inputs are normal voice samples. 1: Audio DAC inputs are sine waves.
13	MUTE	**Mute switch** 0: Turn on the sine wave output in this test mode 1: Mute the sine wave output
10:8	AMP_DIV	**Amplitude setting** 111: Full scale 110: 1/2 full scale 101: 1/4 full scale 100: 1/8 full scale 011: 1/16 full scale 010: 1/32 full scale 001: 1/64 full scale 000: 1/128 full scale
7:0	FREQ_DIV	**Frequency setting, 1X ~ 15X (voice), 1X ~ 31X (audio)** Audio frequency = Sampling rate/64*FREQ_DIV Voice frequency = Sampling rate/32*FREQ_DIV Example: 16K voice mode, FREQ_DIV=3, frequency = 16K/32*3 = 1.5K

82CD0034 AFE_VAM_SET Audio/Voice Interactive Mode Setting 0005

Bit	15	14	13	12	11	10	9	8	7	6	5	4	3	2	1	0
Name	A2V													PER_VAL		
Type	RW													RW		
Reset	0													1	0	1

Bit(s)	Mnemonic	Name	Description
15		A2V	**Redirects audio interrupt to voice interrupt, i.e. replaces voice interrupt by audio interrupt** 0: Voice interrupt/audio interrupt 1: Audio interrupt/no interrupt
2:0		PER_VAL	**Counter reset value for audio interrupt generation period setting. For example, by default, the setting = 5 will lead to interrupt per 6 L/R samples. Changing this value will change the rate of audio interrupt.**

82CD0040 AFE_DC_DBG_1 AFE DC Debug Register 1 0000

Bit	15	14	13	12	11	10	9	8	7	6	5	4	3	2	1	0
Name	AFE_DC_DBG_1															
Type	RO															
Reset	0	0	0	0	0	0	0	0	0	0	0	0	0	0	0	0

Bit(s)	Mnemonic	Name	Description
15:0		AFE_DC_DBG_1	**AFE left channel 8X dc compensation/gain output value [15:0] for debugging**

82CD0044 AFE_DC_DBG_2 AFE DC Debug Register 2 0000

Bit	15	14	13	12	11	10	9	8	7	6	5	4	3	2	1	0
Nam	AFE_DC_DBG_2															

This document contains information that is proprietary to MediaTek Inc. ("MediaTek") and/or its licensor(s).
Any unauthorized use, reproduction or disclosure of this document in whole or in part is strictly prohibited.

e																
Type	RO															
Reset	0	0	0	0	0	0	0	0	0	0	0	0	0	0	0	0

Bit(s)	Mnemonic	Name	Description
15:0		AFE_DC_DBG_2	**AFE right channel 8X dc compensation/gain output value [15:0] for debugging**

82CD0048 AFE_DC_DBG_3 AFE DC Debug Register 3 0000

Bit	15	14	13	12	11	10	9	8	7	6	5	4	3	2	1	0
Name	DBG_DC_SEL								AFE_DC_DBG_2_1				AFE_DC_DBG_1_1			
Type	R/W								RO				RO			
Reset	0								0	0	0	0	0	0	0	0

Bit(s)	Mnemonic	Name	Description
15		DBG_DC_SEL	**DBG_DC_SEL** 0: AFE_DC_DBG_0 to AFE_DC_DBG_3 is DC compensation output. 1: AFE_DC_DBG_0 to AFE_DC_DBG_3 is gain stage output.
7:4		AFE_DC_DBG_2_1	**AFE right channel 8X dc compensation/gain output value [19:16] for debugging**
3:0		AFE_DC_DBG_1_1	**AFE left channel 8X dc compensation/gain output value [19:16] for debugging**

82CD0140 AFE_ACHECK_SUM_R AFE Checksum Register 0 0000

Bit	15	14	13	12	11	10	9	8	7	6	5	4	3	2	1	0
Name	AFE_ACHECK_SUM_R															
Type	RO															
Reset	0	0	0	0	0	0	0	0	0	0	0	0	0	0	0	0

Bit(s)	Mnemonic	Name	Description
15:0		AFE_ACHECK_SUM_R	**AFE right channel 8X checksum value for cosim debugging**

82CD0144 AFE_ACHECK_SUM_L AFE Checksum Register 1 0000

Bit	15	14	13	12	11	10	9	8	7	6	5	4	3	2	1	0
Name	AFE_ACHECK_SUM_L															
Type	RO															
Reset	0	0	0	0	0	0	0	0	0	0	0	0	0	0	0	0

Bit(s)	Mnemonic	Name	Description
15:0		AFE_ACHECK_SUM_L	**AFE left channel 8X checksum value for cosim debugging**

© 2015 - 2017 MediaTek Inc.

This document contains information that is proprietary to MediaTek Inc. ("MediaTek") and/or its licensor(s).
Any unauthorized use, reproduction or disclosure of this document in whole or in part is strictly prohibited.

82CD0148 AFE_MUTE_STA AFE Mute Status Register 0000

Bit	15	14	13	12	11	10	9	8	7	6	5	4	3	2	1	0
Name													UNMUTE_DONE_L	UNMUTE_DONE_R	MUTE_DONE_L	MUTE_DONE_R
Type													RO	RO	RO	RO
Reset													0	0	0	0

Bit(s)	Mnemonic	Name	Description
3		UNMUTE_DONE_L	**UNMUTE_DONE_L status**
2		UNMUTE_DONE_R	**UNMUTE_DONE_R status**
1		MUTE_DONE_L	**MUTE_DONE_L status**
0		MUTE_DONE_R	**MUTE_DONE_R status**

82CD0190 AFE_DBG_RD_PRE AFE MCU Debug Mode Reading SRAM Out 0000

Bit	15	14	13	12	11	10	9	8	7	6	5	4	3	2	1	0
Name					MEM		AFE_DBG_RD_PRE									
Type					RW		RW									
Reset					0	0	0	0	0	0	0	0	0	0	0	0

Bit(s)	Mnemonic	Name	Description
11:10		MEM	**Memory** 00: NA 01: Data memory 10: Coefficient memory 11: DSP co-processor mapping registers
9:0		AFE_DBG_RD_PRE	**Read address**

82CD0194 AFE_DBG_MD_CON0 AFE Debug Mode Control Register 0 0000

Bit	15	14	13	12	11	10	9	8	7	6	5	4	3	2	1	0
Name															DBG_DONE	DBG_TRIG
Type															RO	RW
Reset															0	0

Bit(s)	Mnemonic	Name	Description
1		DBG_DONE	**Debug done signal**
0		DBG_TRIG	**Set up this bit to start running debug mode when debug mode enable register is high.**

82CD0198 AFE_DBG_MD_CON1 AFE Debug Mode Control Register 1 0000

Bit	15	14	13	12	11	10	9	8	7	6	5	4	3	2	1	0

© 2015 - 2017 MediaTek Inc.

This document contains information that is proprietary to MediaTek Inc. ("MediaTek") and/or its licensor(s).
Any unauthorized use, reproduction or disclosure of this document in whole or in part is strictly prohibited.

Name	DBG_MD	MODE_SEL			DBG_MD_VAL											
Type	RW	RW			RW											
Reset	0	0	0	0	0	0	0	0	0	0	0	0	0	0	0	0

Bit(s)	Mnemonic	Name	Description
15		DBG_MD	**Enables debug mode** 0: Disable 1: Enable
14:12		MODE_SEL	**Selects debug mode** 000: Step 1 mode 001: Nxt n cycle, n is DBG_MD_VAL 010: Run to break point. Break point is DBG_MD_VAL 011: Run 1X 101: Run to n 1X, n is DBG_MD_VAL
11:0		DBG_MD_VAL	**Corresponding value for different debug mode**

82CD019C AFE_DBG_APB_STATUS AFE MCU Status Register 0000

Bit	15	14	13	12	11	10	9	8	7	6	5	4	3	2	1	0
Name														DBGR_OK	APBR_OK	APBW_ACK
Type														RO	RO	RO
Reset														0	0	0

Bit(s)	Mnemonic	Name	Description
2		DBGR_OK	**Status for debug mode reading SRAM**
1		APBR_OK	**Status for read SRAM data**
0		APBW_ACK	**Status for writing data into SRAM**

82CD01CC AFE_CMPR_CNTR AFE Compare Counter Control Register 021D

Bit	15	14	13	12	11	10	9	8	7	6	5	4	3	2	1	0
Name	avcntr_err_signal				cmpr_cntr											
Type	RO				RW											
Reset	0				0	0	1	0	0	0	0	1	1	1	0	1

Bit(s)	Mnemonic	Name	Description
15		avcntr_err_signal	**Compare counter for 1X enable error flag**
11:0		cmpr_cntr	**If the clock count in 1x enable < cmpr_cntr, avcntr_err_signal will be pulled high.**

82CD01E0 AFE_DBG_RD_DAT AFE Debug Mode - Reading SRAM Data 000000

Bit	31	30	29	28	27	26	25	24	23	22	21	20	19	18	17	16

© 2015 - 2017 MediaTek Inc.

This document contains information that is proprietary to MediaTek Inc. ("MediaTek") and/or its licensor(s).
Any unauthorized use, reproduction or disclosure of this document in whole or in part is strictly prohibited.

Name													DBG_RD_DAT[19:16]			
Type													RO			
Reset													0	0	0	0
Bit	15	14	13	12	11	10	9	8	7	6	5	4	3	2	1	0
Name	DBG_RD_DAT[15:0]															
Type	RO															
Reset	0	0	0	0	0	0	0	0	0	0	0	0	0	0	0	0

Bit(s)	Mnemonic	Name	Description
19:0		DBG_RD_DAT	**The register width is 20 bits.**

82CD01E4 AFE_APBMEM_RD_DAT AFE MCU Reading SRAM Data 000000

Bit	31	30	29	28	27	26	25	24	23	22	21	20	19	18	17	16
Name													AFE_APBMEM_RD_DAT[19:16]			
Type													RO			
Reset													0	0	0	0
Bit	15	14	13	12	11	10	9	8	7	6	5	4	3	2	1	0
Name	AFE_APBMEM_RD_DAT[15:0]															
Type	RO															
Reset	0	0	0	0	0	0	0	0	0	0	0	0	0	0	0	0

Bit(s)	Mnemonic	Name	Description
19:0		AFE_APBMEM_RD_DAT	**The register width is 20 bits**

82CD01E8 AFE_APBMEM_RD AFE MCU Read SRAM Request 0000

Bit	15	14	13	12	11	10	9	8	7	6	5	4	3	2	1	0
Name					MEM		AFE_APBMEM_RD									
Type					RW		RW									
Reset					0	0	0	0	0	0	0	0	0	0	0	0

Bit(s)	Mnemonic	Name	Description
11:10		MEM	**Memory** 00: NA 01: Data memory 10: Coefficient memory 11: DSP co-processor mapping registers
9:0		AFE_APBMEM_RD	**Read address**

82CD01EC AFE_PC_1X_IDX AFE Program 1X IDX 0022

Bit	15	14	13	12	11	10	9	8	7	6	5	4	3	2	1	0
Name					AFE_PC_1X_IDX											
Type					RW											
Reset					0	0	0	0	0	0	1	0	0	0	1	0

Bit(s)	Mnemonic	Name	Description
11:0		AFE_PC_1X_IDX	**DSP co-processor idle address**

© 2015 - 2017 MediaTek Inc.

This document contains information that is proprietary to MediaTek Inc. ("MediaTek") and/or its licensor(s).
Any unauthorized use, reproduction or disclosure of this document in whole or in part is strictly prohibited.

Do not change the value. AFE may hang if the value is changed.

82CD01F0 AFE_DBG_SIG AFE 8X/Buffer/Mux Debug 0000

Bit	15	14	13	12	11	10	9	8	7	6	5	4	3	2	1	0
Name	DBG_1XDAT_EN								V8X_LPBK	DMIC_SWAP	AAFE_ALN	VAFE_ALN	VDL	VUL	ADL	I2S
Type	RW								RW	RW	RO	RO	RO	RO	RO	RO
Reset	0								0	0	0	0	0	0	0	0

Bit(s)	Mnemonic	Name	Description
15		DBG_1XDAT_EN	**Enables 1X sample data for debug input**
7		V8X_LPBK	**Voice downlink 8x output loopback to uplink 8x**
6		DMIC_SWAP	**Swaps digital mic input source**
5		AAFE_ALN	**aafe_on align 1x_enable signal**
4		VAFE_ALN	**vafe_on align 1x_enable signal**
3		VDL	**VDL debug signal**
2		VUL	**VLL debug signal**
1		ADL	**ADL debug signal**
0		I2S	**I2S debug signal**

82CD01F4 AFE_PC_OUT_DBG AFE Program PC Address 0000

Bit	15	14	13	12	11	10	9	8	7	6	5	4	3	2	1	0
Name					PC_OUT											
Type					RO											
Reset					0	0	0	0	0	0	0	0	0	0	0	0

Bit(s)	Mnemonic	Name	Description
11:0		PC_OUT	**Current DSP co-processor programming counter output for debugging**

82CD01F8 AFE_DBG_1XDAT DBG_1XDAT 0000

Bit	15	14	13	12	11	10	9	8	7	6	5	4	3	2	1	0
Name	AFE_DBG_1XDAT															
Type	RW															
Reset	0	0	0	0	0	0	0	0	0	0	0	0	0	0	0	0

Bit(s)	Mnemonic	Name	Description
15:0		AFE_DBG_1XDAT	**Debug 1X input. Used in debug mode**

82CD0200 AFE_COSIM_RG AFE COSIM RG Test 0000

© 2015 - 2017 MediaTek Inc.

This document contains information that is proprietary to MediaTek Inc. ("MediaTek") and/or its licensor(s).
Any unauthorized use, reproduction or disclosure of this document in whole or in part is strictly prohibited.

Bit	15	14	13	12	11	10	9	8	7	6	5	4	3	2	1	0
Name															FPGA_DL2UL_LPBK	UL_SINE_OUT
Type															RW	RW
Reset															0	0

Bit(s)	Mnemonic	Name	Description
1		FPGA_DL2UL_LPBK	**FPGA loopback mode** 0: Normal mode 1: Uplink data are from DL FIFO.
0		UL_SINE_OUT	**Uplink data are sine table output.**

82CD0210 AFE_MCU_CON0 AFE MCU Control Register 0 0000

Bit	15	14	13	12	11	10	9	8	7	6	5	4	3	2	1	0
Name																AFE_ON
Type																RW
Reset																0

Bit(s)	Mnemonic	Name	Description
0		AFE_ON	**Turns on the audio front end** 0: Turn off 1: Turn on

82CD0214 AFE_MCU_CON1 AFE MCU Control Register 1 0000

Bit	15	14	13	12	11	10	9	8	7	6	5	4	3	2	1	0
Name													UDSP_DL_ON	A_IF_DL_ON	UDSP_UL_ON	A_IF_UL_ON
Type													RW	RW	RW	RW
Reset													0	0	0	0

Bit(s)	Mnemonic	Name	Description
3		UDSP_DL_ON	**Turns on UDSP DL function** 0: Turn off 1: Turn on
2		A_IF_DL_ON	**Turns on a_interface DL function** 0: Turn off 1: Turn on
1		UDSP_UL_ON	**Turns on UDSP UL function** 0: Turn off 1: Turn on
0		A_IF_UL_ON	**Turns on a_interface UL function** 0: Turn off 1: Turn on

© 2015 - 2017 MediaTek Inc.

This document contains information that is proprietary to MediaTek Inc. ("MediaTek") and/or its licensor(s).
Any unauthorized use, reproduction or disclosure of this document in whole or in part is strictly prohibited.

21. 2D Acceleration

21.1. General Description

To enhance MMI display and gaming experiences, a 2D acceleration engine is implemented. It supports many types of color formats. Main features are listed as follows:

- Four-layer overlay with individual color format, window size, source key, constant alpha and rotation.
- Supports up to 2048x2048 resolution for each layer and Region of Interest (ROI).
- Each layer supports RGB565, RGB888, BGR888, ARGB8888, PARGB8888, ARGB6666, ARGB8565, PARGB6666, PARGB8565 and YUYV422 format
- Font caching: normal font and anti-aliasing font
- Rectangle fill with alpha-blending
- Specific output color replacement

MCU can program 2D engine registers via APB. However, MCU has to make sure that the 2D engine is not BUSY before any write to 2D engine registers occurs. An interrupt scheme is also provided for more flexibility. Top view of 2D engine is shown as .

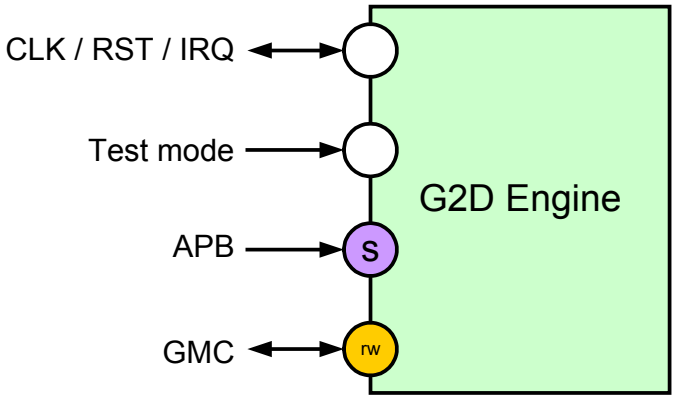

Figure 21-1. *2D Engine Block Diagram*

© 2015 - 2017 MediaTek Inc.

This document contains information that is proprietary to MediaTek Inc. (“MediaTek”) and/or its licensor(s).
Any unauthorized use, reproduction or disclosure of this document in whole or in part is strictly prohibited.

21.2. Features

21.2.1. 2D Coordinate

The ROI coordinates in 2D engine are represented as 12-bit signed integers which covered from -2048 to 2047. The maximum resolution of ROI coordinates can achieve 4096x4096, however the maximum ROI size and layer window size are 2048x2048. shows the coordinate system of 2D engine.

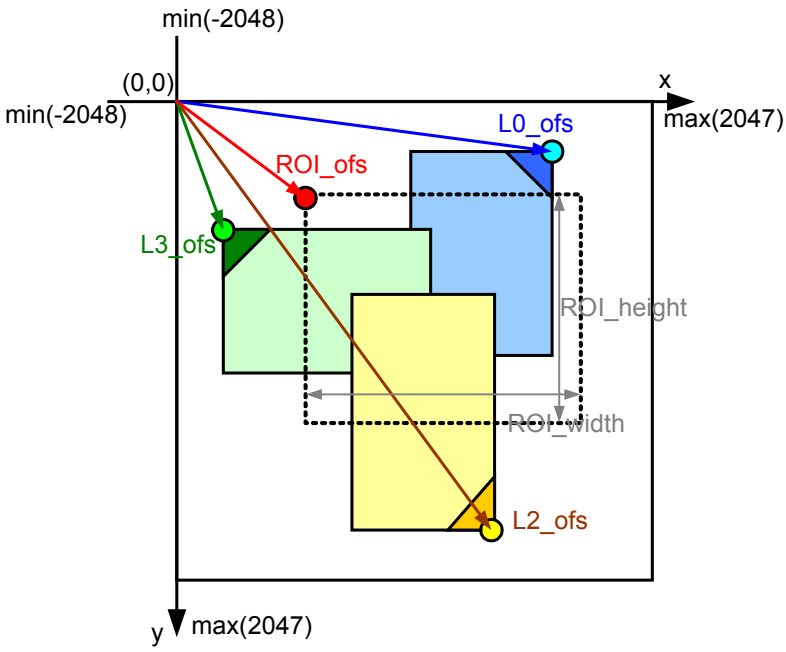

Figure 21-2. 2D Engine Coordinates

21.2.2. Color Format

Each layer supports RGB565, RGB888, BGR888, ARGB8888, PARGB8888 and YUV422 (UY0VY1 from low address to high address) color format. 2D engine supports RGB565, RGB888, BGR888, ARGB8888 and PARGB8888 color format for write channel. However, 2D engine cannot convert PARGB to ARGB color format (Ex. Layer 0 and 1 are PARGB color format but ROI is ARGB)

21.2.3. Clipping Window

The setting for clipping window is effective for all the 2D graphics. A pair of minimum and maximum boundary is applied on ROI window. The portion outside the clipping window will not be drawn to the memory, but the pixels on the boundary will be kept. The clipping operation is illustrated in .

© 2015 - 2017 MediaTek Inc.

This document contains information that is proprietary to MediaTek Inc. (“MediaTek”) and/or its licensor(s).
Any unauthorized use, reproduction or disclosure of this document in whole or in part is strictly prohibited.

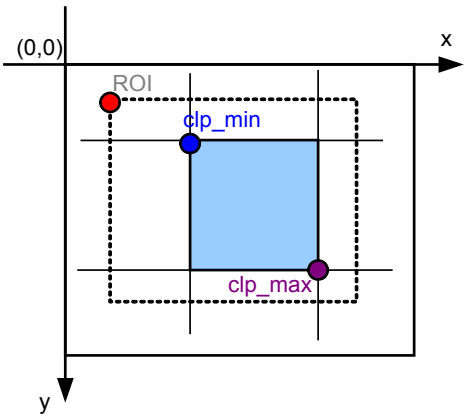

Figure 21-3. 2D Engine Clipping Operation

21.2.4. Alpha Blending Formula

The alpha blending formula is selected by source color format and the formula is listed below:

1. If the source color format is PARGB

```
if (SCA != 0xff) {
        Dst.R = Dst.R * (0xff – Src.A * SCA/0xff) / 0xff + Src.R * SCA/0xff;
        Dst.G = Dst.G * (0xff – Src.A * SCA/0xff) / 0xff + Src.G * SCA/0xff;
        Dst.B = Dst.B * (0xff – Src.A * SCA/0xff) / 0xff + Src.B * SCA/0xff;
        Dst.A = Dst.A * (0xff – Src.A * SCA/0xff) / 0xff + Src.A * SCA/0xff;
}
else {
        Dst.R = Dst.R * (0xff – Src.A) / 0xff + Src.R;
        Dst.G = Dst.G * (0xff – Src.A) / 0xff + Src.G;
        Dst.B = Dst.B * (0xff – Src.A) / 0xff + Src.B;
        Dst.A = Dst.A * (0xff – Src.A) / 0xff + Src.A;
}
```

2. If the source color format is ARGB

```
if (SCA != 0xff) {
        Dst.R = Dst.R * (0xff – Src.A * SCA/0xff) / 0xff + Src.R * (Src.A/0xff) * (SCA/0xff);
        Dst.G = Dst.G * (0xff – Src.A * SCA/0xff) / 0xff + Src.G * (Src.A/0xff) * (SCA/0xff);
        Dst.B = Dst.B * (0xff – Src.A * SCA/0xff) / 0xff + Src.B * (Src.A/0xff) * (SCA/0xff);
        Dst.A = Dst.A * (0xff – Src.A * SCA/0xff) / 0xff + Src.A * SCA/0xff;
}
else {
        Dst.R = Dst.R * (0xff – Src.A) / 0xff + Src.R * Src.A/0xff;
        Dst.G = Dst.G * (0xff – Src.A) / 0xff + Src.G * Src.A/0xff;
        Dst.B = Dst.B * (0xff – Src.A) / 0xff + Src.B * Src.A/0xff;
        Dst.A = Dst.A * (0xff – Src.A) / 0xff + Src.A;
}
```

3. If the source color format is RGB)

```
Dst.R = Dst.R * (0xff – SCA) / 0xff + Src.R * SCA/0xff;
Dst.G = Dst.G * (0xff – SCA) / 0xff + Src.G * SCA/0xff;
Dst.B = Dst.B * (0xff – SCA) / 0xff + Src.B * SCA/0xff;
Dst.A = Dst.A * (0xff – SCA) / 0xff + Src.A * SCA/0xff;
```

© 2015 - 2017 MediaTek Inc.

This document contains information that is proprietary to MediaTek Inc. (“MediaTek”) and/or its licensor(s).
Any unauthorized use, reproduction or disclosure of this document in whole or in part is strictly prohibited.

Where SCA is the source constant alpha specified by ALPHA in G2D_Lx_CON, Dst.ARGB is the destination color, and Src.ARGB is the source color. If the source color format is RGB888 or RGB565, Src.A will be 0xff. The range of the alpha channel is from 0x0 to 0xff. When performing PARGB or ARGB with SCA, it takes two cycles to complete the alpha-blending formula. Thus we do not recommend using SCA when aa-font drawing and rectangle fill.

21.2.5. Font Drawing

21.2.5.1. Normal Font Drawing

The 2D engine helps to render fonts stored in one-bit-per-pixel format. If the index value is one, 2D engine writes foreground color out to memory and no action will be taken if the value is zero. The start bit of font drawing can be implemented by shifting the starting x coordinate of source, and it can be non-byte aligned to save memory usage for font caching. In addition, the rotations can be performed at the same time when drawing fonts.

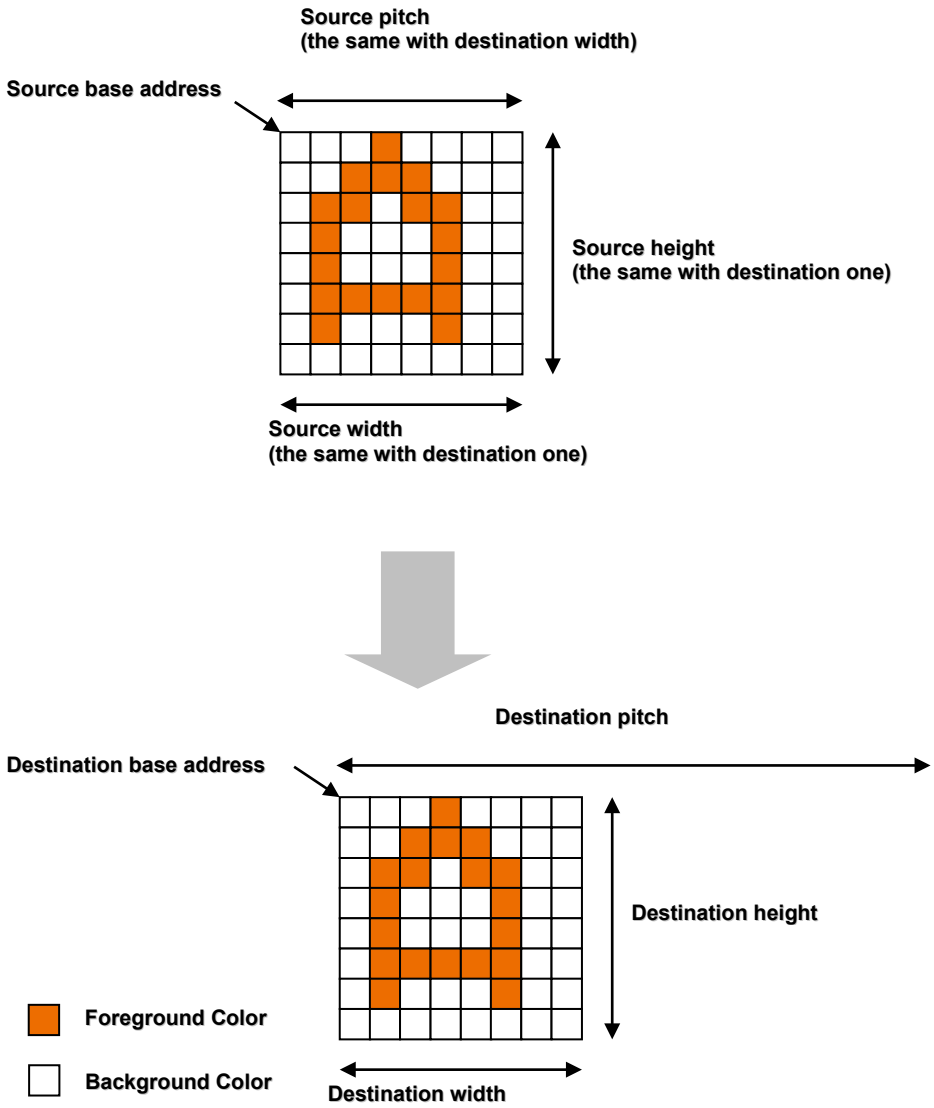

Figure 21-4. Font Drawing Setting

This document contains information that is proprietary to MediaTek Inc. ("MediaTek") and/or its licensor(s).
Any unauthorized use, reproduction or disclosure of this document in whole or in part is strictly prohibited.

21.2.5.2. Anti-Aliasing Font Drawing

The 2D engine can accelerate the rendering of anti-aliasing fonts stored in multi-bit-per-pixel format (1/2/4/8). It is realized by enabled FONT_EN and ALP_EN in G2D_Lx_CON. The index color gives the interpolation weight value for foreground color.

In anti-aliasing font drawing, there are two passes alpha blending applying among the font alpha value, foreground color, and destination color. The following figure describes the sequence.

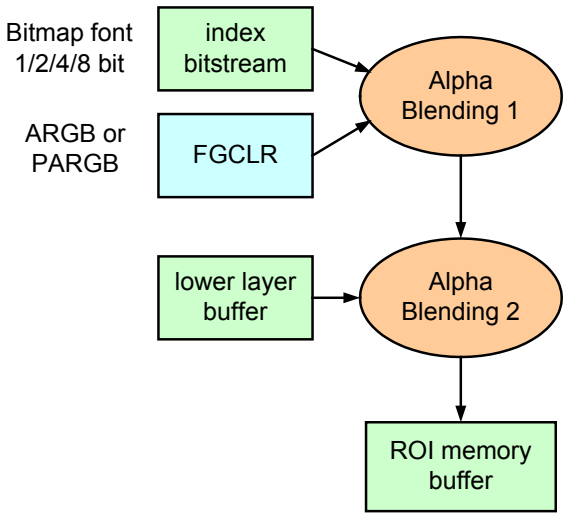

Figure 21-5. Anti-aliasing Font Diagram

Alpha blending 1 performs alpha blending between alpha value from font alpha bitstream and foreground color. The formula is listed below:

```
switch( bit_per_pixel){
  case 1: weighting = (bit_stream == 1) ? 0xff : 0x00;
  case 2: weighting = (bit_stream << 6) | (bit_stream << 4) | (bit_stream << 2) | (bit_stream << 0);
  case 4: weighting = (bit_stream << 4) | (bit_stream << 0);
  case 8: weighting = bit_stream;
}
if (layer color format == PARGB){
    font.[argb] = (fgclr.[argb] * weighting + 0x80) / 0xff;
} else {
  font.a = (fgclr.a * weighting + 0x80) / 0xff;
}
```

where the divide by 0xff is implemented as following formula:

*value / 0xff = (value * 257) >> 16;*

Alpha blending 2 is an alpha blending between the result of alpha blending 1 and destination color. The formula of alpha blending 2 is as same as section 21.2.4.

© 2015 - 2017 MediaTek Inc.

This document contains information that is proprietary to MediaTek Inc. (“MediaTek”) and/or its licensor(s).
Any unauthorized use, reproduction or disclosure of this document in whole or in part is strictly prohibited.

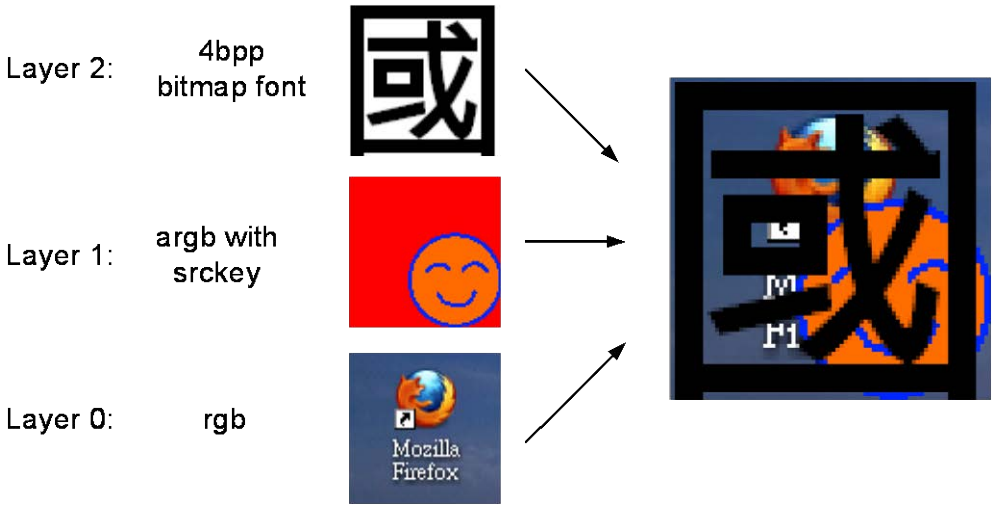

Figure 21-6. Anti-aliasing Font Example

shows an example of anti-aliasing font operation. Each layer can be configured as font bitmap (layer 2 in this example). After blending all layers' pixel, the color would be written to ROI memory buffer.

21.2.6. Rectangle Fill

Each layer could be configured as a constant color to perform rectangle fill. If alpha-blending is enabled at this layer, the constant color will blending to lower layer as shown in .

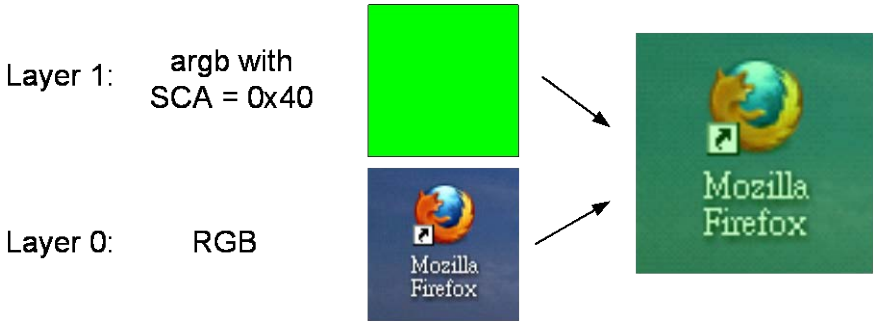

Figure 21-7. Rectangle Fill with Alpha-Blending Example

© 2015 - 2017 MediaTek Inc.

This document contains information that is proprietary to MediaTek Inc. ("MediaTek") and/or its licensor(s).
Any unauthorized use, reproduction or disclosure of this document in whole or in part is strictly prohibited.

21.3. Application Notes

The purpose of this document is to describe the functional interface of G2D to help supporting the usage of 2D accelerations. It is noted that there are many 2D acceleration features provided by MediaTek's 2D Hardware/Software engine. However, in current driver design, we supported

1. Hardware Bitblt
2. Hardware Rectangle fill
3. Hardware Font drawing
4. Software Linear transform
5. Hardware Overlay

Generally, the G2D driver interfaces are provided and combined with GDI layers. It is strongly suggested that application to use G2D interface through GDI. Nevertheless, you could use the 2D engine by calling the G2D driver APIs directly. Below figure shows the block diagram of graphic 2D driver interface

- GDI: Graphics Device Interface,
- G2D: Graphic 2D engine
- BitBlt: Bit block transfers

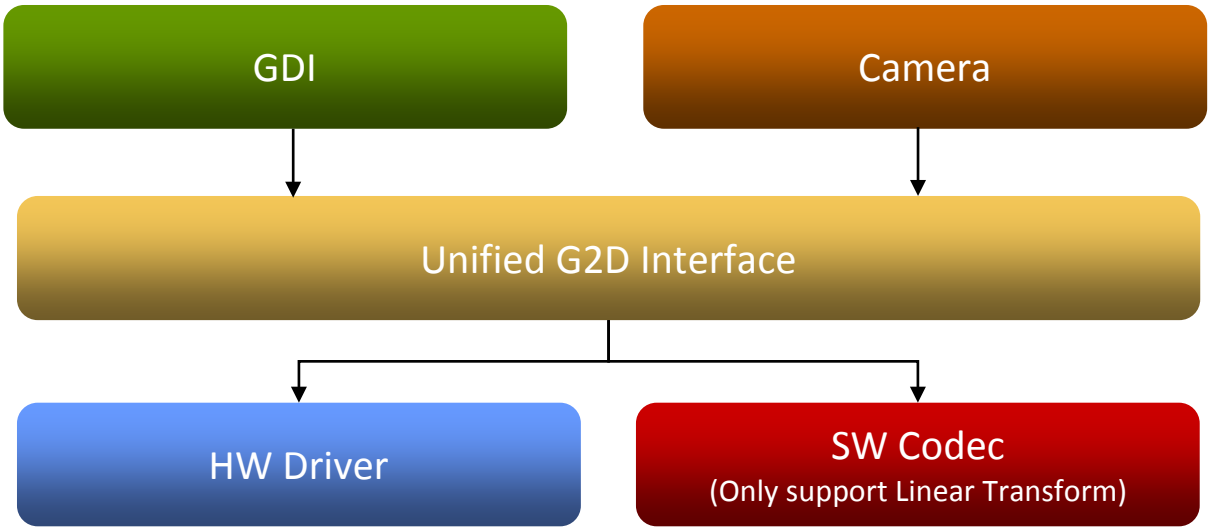

Figure 21-8. The block diagram of graphic 2D driver interface

© 2015 - 2017 MediaTek Inc.

This document contains information that is proprietary to MediaTek Inc. ("MediaTek") and/or its licensor(s).
Any unauthorized use, reproduction or disclosure of this document in whole or in part is strictly prohibited.

Here is an example for BitBlt using API:

```
src_buf = (kal_uint8 *)&rgb565_240X320[0];
dst_buf = (kal_uint8 *)&dst_hw_image_240X320[0];
src_color_format = G2D_COLOR_FORMAT_RGB565;
dst_color_format = G2D_COLOR_FORMAT_RGB565;
src_rect_w = 240;
src_rect_h = 320;
dst_rect_w = 320;
dst_rect_h = 240;

/// G2D_STATUS_BUSY means someone is using G2D
if(G2D_STATUS_OK != g2dGetHandle(&g2dHandle, G2D_CODEC_TYPE_HW,
G2D_GET_HANDLE_MODE_DIRECT_RETURN_HANDLE))
  return;

g2dSetCallbackFunction(g2dHandle,NULL);
g2dSetDstRGBBufferInfo(g2dHandle, (kal_uint8 *)dst_buf, 240 * 320 * 4, dst_rect_w, dst_rect_h,
dst_color_format);
g2dSetColorReplacement(g2dHandle, KAL_FALSE, 0, 255, 0, 0, 0, 0, 0, 255);
g2dSetDstClipWindow(g2dHandle, KAL_FALSE, 0, 0, dst_rect_w, dst_rect_h);
g2dSetSrcKey(g2dHandle, KAL_FALSE, 0, 0, 0, 0);

g2dBitBltSetSrcRGBBufferInfo(g2dHandle, src_buf, 240 * 320 * 2, src_rect_w, src_rect_h, src_color_format);
g2dBitBltSetSrcWindow(g2dHandle, 0, 0, src_rect_w, src_rect_h);
g2dBitBltSetDstWindow(g2dHandle, 0, 0, dst_rect_w, dst_rect_h);
g2dBitBltSetRotation(g2dHandle, G2D_ROTATE_ANGLE_090);
g2dBitBltSetSrcAlpha(g2dHandle, KAL_FALSE, 0x0);
g2dBitBltSetDstAlpha(g2dHandle, KAL_FALSE, 0x0);
g2dBitBltStart(g2dHandle);

while(g2dGetStatus(g2dHandle)) {};
g2dReleaseHandle(g2dHandle);
```

© 2015 - 2017 MediaTek Inc.

This document contains information that is proprietary to MediaTek Inc. (“MediaTek”) and/or its licensor(s).
Any unauthorized use, reproduction or disclosure of this document in whole or in part is strictly prohibited.

21.4. Register Definitions

summarizes the 2D engine register mapping on APB. The base address of 2D engine is A0440000h .

Table 21-1. The 2D engine register mapping

APB Address	Register Function	Acronym
G2D+0000h	G2D Start Register	START
G2D+0004h	G2D Mode Control Register	MODE_CON
G2D+0008h	G2D Reset Register	RESET
G2D+000Ch	G2D Status Register	STATUS
G2D+0010	G2D Interrupt Regsiter	IRQ
G2D+0014h	G2D Slow Down Control Register	SLOW_DOWN
G2D+0040h	G2D ROI Control Register	ROI_CON
G2D+0044h	G2D Write to Memory Address Register	W2M_ADDR
G2D+0048h	G2D Write to Memory Pitch Register	W2M_PITCH
G2D+004Ch	G2D ROI Offset Register	ROI_OFS
G2D+0050h	G2D ROI Size Register	ROI_SIZE
G2D+0054h	G2D ROI Background Color Register	ROI_BGCLR
G2D+0058h	G2D Clipping Minimum Coordinate Register	CLP_MIN
G2D+005Ch	G2D Clipping Maximum Coordinate Register	CLP_MAX
G2D+0060h	G2D Avoid Write Color Register	AVO_CLR
G2D+0064h	G2D Replaced Color Register	REP_CLR
G2D+0068h	G2D Write to Memory Offset Register	W2M_MOFS
G2D+0070h	G2D MW Initial value	MW_INIT
G2D+0074h	G2D MZ Initial value	MZ_INIT
G2D+0078h	G2D Dithering Control Register	DI_CON
G2D+0080h	G2D Layer 0 Control Register	L0_CON
G2D+0084h	G2D Layer 0 Address Register	L0_ADDR
G2D+0088h	G2D Layer 0 Pitch Register	L0_PITCH
G2D+008Ch	G2D Layer 0 Offset Register	L0_OFS
G2D+0090h	G2D Layer 0 Size Register	L0_SIZE
G2D+0094h	G2D Layer 0 Source Key Register G2D Initial Source Sample Z Register	L0_SRCKEY SZ_INIT
G2D+00C0h	G2D Layer 1 Control Register	L1_CON
G2D+00C4h	G2D Layer 1 Address Register	L1_ADDR

© 2015 - 2017 MediaTek Inc.

This document contains information that is proprietary to MediaTek Inc. (“MediaTek”) and/or its licensor(s).
Any unauthorized use, reproduction or disclosure of this document in whole or in part is strictly prohibited.

G2D+00C8h	G2D Layer 1 Pitch Register	L1_PITCH
G2D+00CCh	G2D Layer 1 Offset Register	L1_OFS
G2D+00D0h	G2D Layer 1 Size Register	L1_SIZE
G2D+00D4h	G2D Layer 1 Source Key Register	L1_SRCKEY
G2D+0100h	G2D Layer 2 Control Register	L2_CON
G2D+0104h	G2D Layer 2 Address Register	L2_ADDR
G2D+0108h	G2D Layer 2 Pitch Register	L2_PITCH
G2D+010Ch	G2D Layer 2 Offset Register	L2_OFS
G2D+0110h	G2D Layer 2 Size Register	L2_SIZE
G2D+0114h	G2D Layer 2 Source Key Register	L2_SRCKEY
G2D+0140h	G2D Layer 3 Control Register	L3_CON
G2D+0144h	G2D Layer 3 Address Register	L3_ADDR
G2D+0148h	G2D Layer 3 Pitch Register	L3_PITCH
G2D+014Ch	G2D Layer 3 Offset Register	L3_OFS
G2D+0150h	G2D Layer 3 Size Register	L3_SIZE
G2D+0154h	G2D Layer 3 Source Key Register	L3_SRCKEY

Module name: 2D Accleration Base address: (+A0440000h)

G2D+0000h G2D Start Register G2D_START

Bit	15	14	13	12	11	10	9	8	7	6	5	4	3	2	1	0
Name																**START**
Type																R/W
Reset																0

START G2D start register. This register should be enabled after all of other registers are already filled.

Please follow the start sequence to trigger G2D:

**G2D_RESET = 2;*

**G2D_RESET = 0;*

**G2D_START = 1;*

0 disable G2D engine

1 trigger G2D engine

G2D+0004h G2D Mode Control Register G2D_MODE_CON

Bit	31	30	29	28	27	26	25	24	23	22	21	20	19	18	17	16
Name										**RESERVED**						
Type										R/W						
Reset										0						

© 2015 - 2017 MediaTek Inc.
This document contains information that is proprietary to MediaTek Inc. ("MediaTek") and/or its licensor(s).
Any unauthorized use, reproduction or disclosure of this document in whole or in part is strictly prohibited.

Bit	15	14	13	12	11	10	9	8	7	6	5	4	3	2	1	0
Name														ENG_MODE		
Type														RO		
Reset														1		

ENG_MODE 2D engine function mode

001 Bitblt

others Reserved

G2D+0008h G2D Reset Register G2D_RESET

Bit	15	14	13	12	11	10	9	8	7	6	5	4	3	2	1	0
Name															HRST	WRST
Type															R/W	R/W
Reset															0	0

HRST G2D hard reset. All registers (except APB registers) will be reset to initial value immediately.

WRST G2D warm reset. Please follow correct reset sequence to avoid potential bus hang problem (breaking bus protocol)

```
G2D_RESET = 0x1;
while (G2D_STATUS != 0){
 read G2D_STATUS;
 }
 G2D_RESET = 0x2;
 G2D_RESET = 0x0;
```

G2D+000Ch G2D Status Register G2D_STATUS

Bit	15	14	13	12	11	10	9	8	7	6	5	4	3	2	1	0
Name															TBUSY	BUSY
Type															RO	RO
Reset															0	0

Read this register to get 2D engine status. 2D engine may function abnormally if any 2D engine register is modified when BUSY.

BUSY 2D engine is busy.

TBUSY Transaction busy. If any read/write memory access transaction is not completed, this register will be asserted.

G2D+0010h G2D Interrupt Register G2D_IRQ

Bit	31	30	29	28	27	26	25	24	23	22	21	20	19	18	17	16
Name																FLAG0
Type																R/W
Reset																0
Bit	15	14	13	12	11	10	9	8	7	6	5	4	3	2	1	0
Name																FLGA0_IRQ_EN
Type																R/W
Reset																0

© 2015 - 2017 MediaTek Inc.

This document contains information that is proprietary to MediaTek Inc. ("MediaTek") and/or its licensor(s).
Any unauthorized use, reproduction or disclosure of this document in whole or in part is strictly prohibited.

FLAG0_IRQ_EN 2D engine interrupt enabled. The interrupt is negative level sensitive.

FLAG0 2D interrupt status. It is raised when engine finished the task and FLAG0_IRQ_EN is asserted.

- **0** Write 0 to clear interrupt
- **1** Interrupt occurs. Software can also write this bit to trigger G2D interrupt.

G2D+0014h G2D Slow Down Control Register

G2D_SLOW_DOWN

Bit	31	30	29	28	27	26	25	24	23	22	21	20	19	18	17	16
Name	**EN**					**RD_BTYP**				**WR_BTYP**						
Type	R/W					R/W				R/W						
Reset	0					0				100						
Bit	15	14	13	12	11	10	9	8	7	6	5	4	3	2	1	0
Name									**SLOW_CNT**							
Type									R/W							
Reset									0							

EN Enable slow down mechanism to slower 2D engine read/write memory speed

RD_BTYP Read request maximum burst type

- **000** burst-8
- **001** burst-4
- **011** single
- **others** reserved

WR_BTYP Write request maximum burst type

- **100** burst-16
- **011** burst-8
- **010** burst-4
- **000** single

SLOW_CNT Read/write request slow counter. The minimum cycle count between two read/write request.

G2D+0040h G2D ROI Control Register

G2D_ROI_CON

Bit	31	30	29	28	27	26	25	24	23	22	21	20	19	18	17	16
Name	**EN0**	**EN1**	**EN2**	**EN3**							**CLR_REP_EN**		**DIS_BG**	**TILE_SIZE**	**FORCE_TS**	**CLP_EN**
Type	R/W	R/W	R/W	R/W							R/W		R/W	R/W	R/W	R/W
Reset	0	0	0	0							0		0	0	0	0
Bit	15	14	13	12	11	10	9	8	7	6	5	4	3	2	1	0
Name	**OUT_ALPHA**								**OUT_ALP_EN**			**CLRFMT**				
Type	R/W								R/W			R/W				
Reset	0								0			0				

ENn Enable the nth layer

CLR_REP_EN Color replacement enabled.

DIS_BG Disable background color. shows the effect of this register. In linear transform mode, DIS_BG should always be 1'b1.

© 2015 - 2017 MediaTek Inc.

This document contains information that is proprietary to MediaTek Inc. ("MediaTek") and/or its licensor(s).
Any unauthorized use, reproduction or disclosure of this document in whole or in part is strictly prohibited.

0 Enable background color

1 If any of following condition is true, this write request will be ignored

(1) No layer covered this ROI position

(2) Normal font and the bitstream value is zero

(3) Source key hit

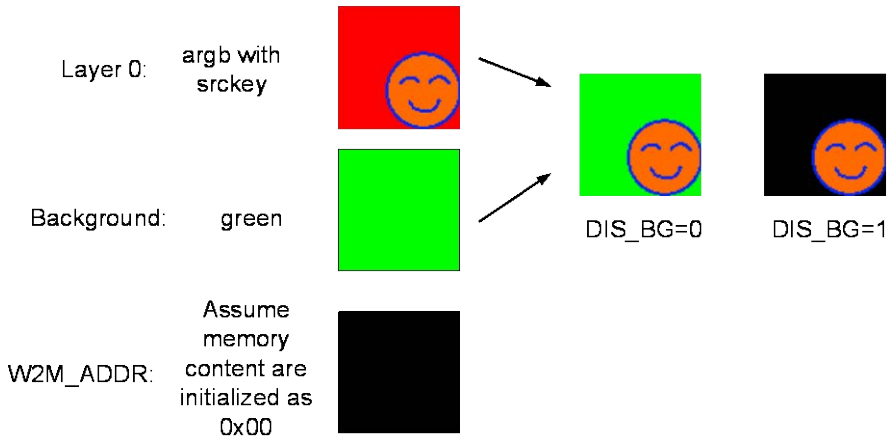

Figure 21-9. DIS_BG example

TILE_SIZE ROI scan tile size, only take effect when FORCE_TS is on. Please set zero (8x8) when performing linear transform.

0 4x4 for bitblt. 8x8 for linear transform

1 8x8 for bitblt. 16x8 for linear transform

FORCE_TS Force tile size. When this field is off, hardware selects the best tile size automatically. 8x8 for linear transform. 16x8 for only one layer is enabled.

0 Off. Hardware select automatically

1 On. Force tile size

CLP_EN Clipping window enabled. Pixels out of clipping window will not be written.

OUT_ALPHA Replace written alpha channel value with this field when OUT_ALP_EN is enabled.

OUT_ALP_EN Output alpha channel replacement enabled.

CLRFMT Write to memory color format. (Notice: After alpha-blending, the color format is always PARGB, not ARGB)

00001 RGB565

00011 RGB888

01000 ARGB8888 (only for bitblt without alpha-blending)

01001 ARGB8565 (only for bitblt without alpha-blending)

01010 ARGB6666 (only for bitblt without alpha-blending)

01100 PARGB8888

01101 PARGB8565

01110 PARGB6666

10011 BGR888

© 2015 - 2017 MediaTek Inc.

This document contains information that is proprietary to MediaTek Inc. ("MediaTek") and/or its licensor(s).
Any unauthorized use, reproduction or disclosure of this document in whole or in part is strictly prohibited.

G2D+0044h G2D W2M Address Register

G2D_W2M_ADDR

Bit	31	30	29	28	27	26	25	24	23	22	21	20	19	18	17	16
Name	W2M_ADDR[31:16]															
Type	R/W															
Reset	0															
Bit	15	14	13	12	11	10	9	8	7	6	5	4	3	2	1	0
Name	W2M_ADDR[15:0]															
Type	R/W															
Reset	0															

W2M_ADDR Write to memory base address. The address should be 2 byte aligned for RGB565 output and 4 byte aligned for ARGB8888 or PARGB8888. RGB888 output can start at any address.

G2D+0048h G2D W2M Pitch Register

G2D_W2M_PITCH

Bit	15	14	13	12	11	10	9	8	7	6	5	4	3	2	1	0
Name			PITCH													
Type			R/W													
Reset			0													

PITCH Write to memory pitch in unit of byte. The pitch divided by the output color format byte-per-pixel (bpp) must be equal or greater than the ROI width. If the output bpp is 4, the pitch must be divisible by 4. If the bpp is 2, the pitch must be divisible by 2. If the bpp is 3 (RGB888), the pitch can be any number greater than ROI width*3. The maximum pitch is 0x2000 which indicates the maximum resolution is 2048x2048@ARGB8888.

G2D+004Ch G2D ROI Offset Register

G2D_ROI_OFS

Bit	31	30	29	28	27	26	25	24	23	22	21	20	19	18	17	16
Name					OFS_X											
Type					R/W											
Reset					0											
Bit	15	14	13	12	11	10	9	8	7	6	5	4	3	2	1	0
Name					OFS_Y											
Type					R/W											
Reset					0											

OFS_X ROI x offset in unit of pixel. 12-bit signed integer, range: [-2048~2047]

OFS_Y ROI y offset in unit of pixel. 12-bit signed integer, range: [-2048~2047]

G2D+0050h G2D ROI Size Register

G2D_ROI_SIZE

Bit	31	30	29	28	27	26	25	24	23	22	21	20	19	18	17	16
Name					WIDTH											
Type					R/W											
Reset					0											
Bit	15	14	13	12	11	10	9	8	7	6	5	4	3	2	1	0
Name					HEIGHT											
Type					R/W											
Reset					0											

© 2015 - 2017 MediaTek Inc.

This document contains information that is proprietary to MediaTek Inc. ("MediaTek") and/or its licensor(s).
Any unauthorized use, reproduction or disclosure of this document in whole or in part is strictly prohibited.

WIDTH Width of ROI window in unit of pixel. 12bit unsigned integer, range: [1, 2048]
HEIGHT Height of ROI window in unit of pixel. 12bit unsigned integer, range: [1, 2048]

G2D+0054h G2D ROI Background Color

G2D_ROI_BGCLR

Bit	31	30	29	28	27	26	25	24	23	22	21	20	19	18	17	16
Name	ALPHA								REG							
Type	R/W								R/W							
Reset	0								0							
Bit	15	14	13	12	11	10	9	8	7	6	5	4	3	2	1	0
Name	GREEN								BLUE							
Type	R/W								R/W							
Reset	0								0							

The color format of background color is PARGB8888.
ALPHA Alpha component of ROI background color
RED Red component of ROI background color
GREEN Green component of ROI background color
BLUE Blue component of ROI background color

G2D+0058h G2D Clipping Minimum Register

G2D_CLP_MIN

Bit	31	30	29	28	27	26	25	24	23	22	21	20	19	18	17	16
Name					CLP_MIN_X											
Type					R/W											
Reset					0											
Bit	15	14	13	12	11	10	9	8	7	6	5	4	3	2	1	0
Name					CLP_MIN_Y											
Type					R/W											
Reset					0											

The clipping window is shown in . Clipping window is not supported in SAD function mode.
CLP_MIN_X The minimum value of x coordinate in clipping window, signed 12-bit integer. Range:[-2048~2047]
CLP_MIN_Y The minimum value of y coordinate in clipping window, signed 12-bit integer. Range:[-2048~2047]

G2D+005Ch G2D Clipping Maximum Register

G2D_CLP_MAX

Bit	31	30	29	28	27	26	25	24	23	22	21	20	19	18	17	16
Name					CLP_MAX_X											
Type					R/W											
Reset					0											
Bit	15	14	13	12	11	10	9	8	7	6	5	4	3	2	1	0
Name					CLP_MAX_Y											
Type					R/W											
Reset					0											

© 2015 - 2017 MediaTek Inc.

This document contains information that is proprietary to MediaTek Inc. ("MediaTek") and/or its licensor(s).
Any unauthorized use, reproduction or disclosure of this document in whole or in part is strictly prohibited.

The clipping window is shown in .

CLP_MAX_X The maximum value of x coordinate in clipping window, signed 12-bit integer. Range:[-2048~2047]

CLP_MAX_Y The maximum value of y coordinate in clipping window, signed 12-bit integer. Range:[-2048~2047]

G2D+0060h G2D Avoid Write Color

G2D_AVO_CLR

Bit	31	30	29	28	27	26	25	24	23	22	21	20	19	18	17	16
Name	**AVO_CLR[31:16]**															
Type	R/W															
Reset	0															
Bit	15	14	13	12	11	10	9	8	7	6	5	4	3	2	1	0
Name	**AVO_CLR[15:0]**															
Type	R/W															
Reset	0															

AVO_CLR When CLR_REP_EN is enabled and write out color is equal to AVO_CLR, the color would be replaced with REP_CLR. The color format of AVO_CLR is the same with ROI color format. The compare operation is done at the last stage as shown in following figure.

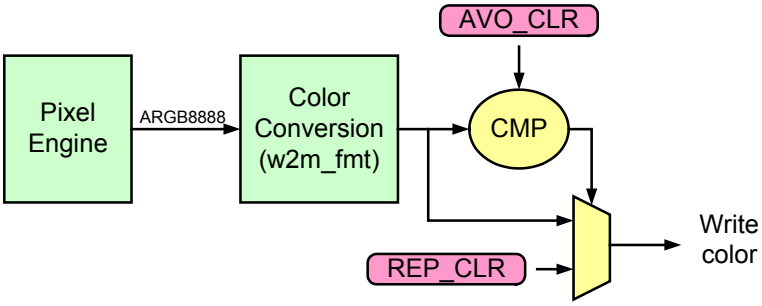

Figure 21-10. Color Replacement Stage

G2D+0064h G2D Replaced Color

G2D_REP_CLR

Bit	31	30	29	28	27	26	25	24	23	22	21	20	19	18	17	16
Name	**REP_CLR[31:16]**															
Type	R/W															
Reset	0															
Bit	15	14	13	12	11	10	9	8	7	6	5	4	3	2	1	0
Name	**REP_CLR[15:0]**															
Type	R/W															
Reset	0															

REP_CLR When CLR_REP_EN is enabled and write out color is equal to AVO_CLR, the color would be replaced with REP_CLR. The color format of REP_CLR is the same with ROI color format.

© 2015 - 2017 MediaTek Inc.

This document contains information that is proprietary to MediaTek Inc. ("MediaTek") and/or its licensor(s).
Any unauthorized use, reproduction or disclosure of this document in whole or in part is strictly prohibited.

G2D+0068h G2D Write to Memory Offset Register

G2D_W2M_MOFS

Bit	31	30	29	28	27	26	25	24	23	22	21	20	19	18	17	16
Name					**W2M_MOFS _X**											
Type					R/W											
Reset					0											
Bit	15	14	13	12	11	10	9	8	7	6	5	4	3	2	1	0
Name					**W2M_MOFS_Y**											
Type					R/W											
Reset					0											

W2M_MOFS _X The ROI memory x-offset, signed 12-bit integer. Range:[-2048~2047]

W2M_MOFS_Y The ROI memory y-offset, signed 12-bit integer. Range:[-2048~2047]

```
for(y'=0; y'<roi_h; y'++){
for(x'=0; x'<roi_w; x'++){
   wx = x' + w2m_mofs_x;
   wy = y' + w2m_mofs_y;
   if(wx<0 || wy <0){
      skip this pixel;
   }
   waddr = W2M_ADDR + wy * PITCH + wx * BPP;
}
}
```

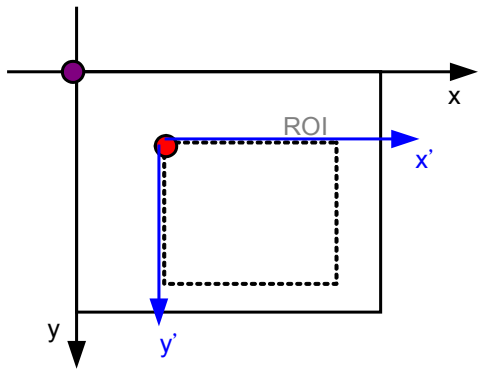

Figure 21-11. ROI Memory Offset

G2D+0070h G2D MW Initial Value Register

G2D_MW_INIT

Bit	31	30	29	28	27	26	25	24	23	22	21	20	19	18	17	16
Name	**MW_INIT[31:16]**															
Type	RW															
Reset	0															
Bit	15	14	13	12	11	10	9	8	7	6	5	4	3	2	1	0
Name	**MW_INIT[15:0]**															
Type	RW															
Reset	0															

MW_INIT The initial value of MW for dithering circuit.

© 2015 - 2017 MediaTek Inc.

This document contains information that is proprietary to MediaTek Inc. ("MediaTek") and/or its licensor(s).
Any unauthorized use, reproduction or disclosure of this document in whole or in part is strictly prohibited.

G2D+0074h G2D MZ Initial Value Register — G2D_MZ_INIT

Bit	31	30	29	28	27	26	25	24	23	22	21	20	19	18	17	16
Name	MZ_INIT[31:16]															
Type	RW															
Reset	0															
Bit	15	14	13	12	11	10	9	8	7	6	5	4	3	2	1	0
Name	MZ_INIT[15:0]															
Type	RW															
Reset	0															

MZ_INIT The initial value of MZ for dithering circuit.

G2D+0078h G2D Dithering Control Register — G2D_DI_CON

Bit	15	14	13	12	11	10	9	8	7	6	5	4	3	2	1	0
Name			DI_R				DI_G				DI_B				DI_MODE	
Type			R/W				R/W				R/W				R/W	
Reset			0				0				0				0	

DI_RGB Dithering bit for each channel

- **00** 0bit dithering
- **01** 1bit dithering
- **10** 2bit dithering
- **11** 3bit dithering

DI_MODE Dither mode

- **00** Disable dithering
- **01** Random number algorithm
- **10** Fixed-pattern

G2D+0080h G2D Layer 0 Control Register — G2D_L0_CON

Bit	31	30	29	28	27	26	25	24	23	22	21	20	19	18	17	16
Name		FONT_EN	IDX						SKEY_EN	RECT_EN				ROT		
Type		R/W	R/W						R/W	R/W				R/W		
Reset		0	0						0	0				0		
Bit	15	14	13	12	11	10	9	8	7	6	5	4	3	2	1	0
Name	ALPHA								ALP_EN			CLRFMT				
Type	R/W								R/W			R/W				
Reset	0								0			0				

FONT_EN Enabled font drawing. If SKEY_EN or RECT_EN is enabled, this register cannot be enabled. When this register is enabled, CLRFMT only supports ARGB8888 or PARGB8888.

IDX Bit-per-pixel for font drawing. If FONT_EN is enabled and ALP_EN is disabled, this register can only be 00.

- **00** 1 bit index color
- **01** 2 bit index color
- **10** 4 bit index color
- **11** 8 bit index color

SKEY_EN Enable source color key. When FONT_EN or RECT_EN is enabled, this register cannot be enabled. Source key cannot be enabled when CLRFMT is YUYV422.

© 2015 - 2017 MediaTek Inc.

This document contains information that is proprietary to MediaTek Inc. ("MediaTek") and/or its licensor(s).
Any unauthorized use, reproduction or disclosure of this document in whole or in part is strictly prohibited.

RECT_EN Fill this layer as constant color which is defined in Ln_SRCKEY. If FONT_EN or SKEY_EN is enabled, this register cannot be enabled. When this register is enabled, CLRFMT does not support YUYV422 color format.

ROT Rotation configuration

- **000** No rotation
- **001** Horizontal flip then 90 degree rotation (counterclockwise)
- **010** Horizontal flip
- **011** 90 degree rotation (counterclockwise)
- **100** Horizontal flip then 180 degree rotation (counterclockwise)
- **101** 270 degree rotation (counterclockwise)
- **110** 180 degree rotation (counterclockwise)
- **111** Horizontal flip then 270 degree rotation (counterclockwise)

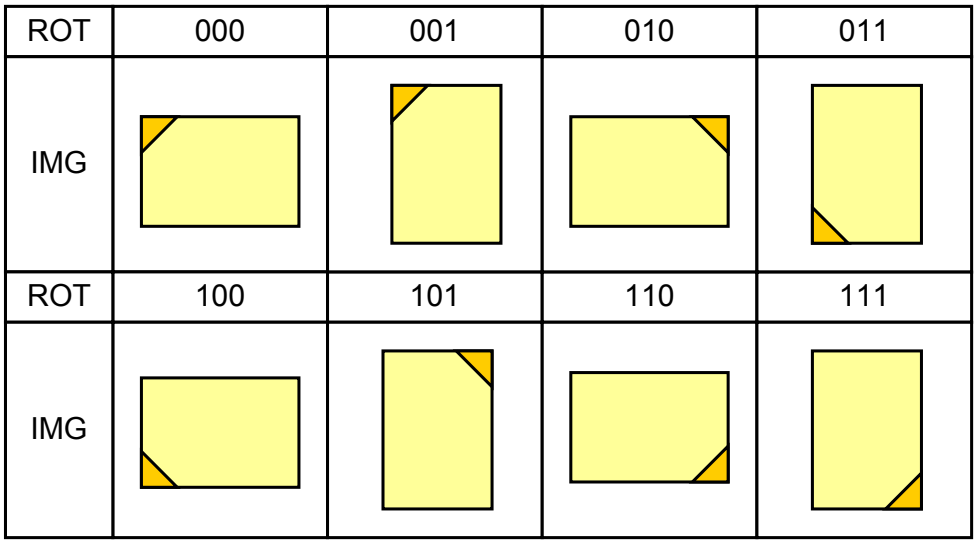

Figure 21-12. Image of Different Rotation Angles

If original ofs_x, ofs_y is at top-left corner, please move the coordinate by following algorithm:

```
width = layer_width – 1;
height = layer_height – 1;
switch(ROT){
 case 2: ofs_x += width;            break;  //Hor_flip
 case 3:         ofs_y += width ; break;  //90 rot (counterclockwise)
 case 4:         ofs_y += height; break;  //Hor_flip then rot_180
 case 5: ofs_x += height;           break;  //270 rot
 case 6: ofs_x += width ; ofs_y += height; break;  //180 rot
 case 7: ofs_x += height; ofs_y += width; break;  //Hor_flip then rot_270
}
```

ALPHA Constant alpha value for alpha-blending and AA-font.

ALP_EN Enable alpha-blending. AA-font is realized by enable both of FONT_EN and ALP_EN.

CLRFMT Layer color format

- **00001** RGB565
- **00010** UY_0VY_1 (from low to high byte address)
- **00011** RGB888
- **01000** ARGB8888
- **01001** ARGB8565

This document contains information that is proprietary to MediaTek Inc. ("MediaTek") and/or its licensor(s).
Any unauthorized use, reproduction or disclosure of this document in whole or in part is strictly prohibited.

01010 ARGB6666
01100 PARGB8888
01101 PARGB8565
01110 PARGB6666
10011 BGR888

G2D+0084h G2D Layer 0 Address Register

G2D_L0_ADDR

Bit	31	30	29	28	27	26	25	24	23	22	21	20	19	18	17	16
Name	**ADDR[31:16]**															
Type	R/W															
Reset	0															
Bit	15	14	13	12	11	10	9	8	7	6	5	4	3	2	1	0
Name	**ADDR[15:0]**															
Type	R/W															
Reset	0															

ADDR Layer 0 base address. The address should be 2 byte aligned for RGB565 output and 4 byte aligned for ARGB8888, PARGB8888 or YVU422. RGB888 color format can start at any address.

G2D+0088h G2D Layer 0 Pitch Register

G2D_L0_PITCH

Bit	15	14	13	12	11	10	9	8	7	6	5	4	3	2	1	0
Name			**PITCH**													
Type			R/W													
Reset			0													

PITCH Layer 0 pitch in unit of byte, but the unit is pixel number when FONT_EN is enabled. The pitch divided by byte-per-pixel (bpp) of color format must be equal or greater than the width. If the bpp is 4, the pitch must be divisible by 4. If the bpp is 2, the pitch must be divisible by 2. If the bpp is 3 (RGB888), the pitch can be any number greater than width*3. The maximum pitch is 0x2000 which indicates the maximum resolution is 2048x2048@ARGB8888.

G2D+008Ch G2D Layer 0 Offset Register

G2D_L0_OFS

Bit	31	30	29	28	27	26	25	24	23	22	21	20	19	18	17	16
Name					**OFS_X**											
Type					R/W											
Reset					0											
Bit	15	14	13	12	11	10	9	8	7	6	5	4	3	2	1	0
Name					**OFS_Y**											
Type					R/W											
Reset					0											

OFS_X ROI x offset in unit of pixel. 12-bit signed integer, range: [-2048~2047]
OFS_Y ROI y offset in unit of pixel. 12-bit signed integer, range: [-2048~2047]

© 2015 - 2017 MediaTek Inc.

This document contains information that is proprietary to MediaTek Inc. ("MediaTek") and/or its licensor(s).
Any unauthorized use, reproduction or disclosure of this document in whole or in part is strictly prohibited.

G2D+0090h G2D Layer 0 Size Register

G2D_L0_SIZE

Bit	31	30	29	28	27	26	25	24	23	22	21	20	19	18	17	16
Name					**WITDH**											
Type					R/W											
Reset					0											
Bit	15	14	13	12	11	10	9	8	7	6	5	4	3	2	1	0
Name					**HEIGHT**											
Type					R/W											
Reset					0											

WIDTH Width of Layer 0 window in unit of pixel. 12bit unsigned integer, range: [1, 2048]

HEIGHT Height of Layer 0window in unit of pixel. 12bit unsigned integer, range: [1, 2048]

G2D+0094h G2D Layer 0 Source Key

G2D_L0_SRCKEY

Bit	31	30	29	28	27	26	25	24	23	22	21	20	19	18	17	16
Name	**SRCKEY[31:16]**															
Type	R/W															
Reset	0															
Bit	15	14	13	12	11	10	9	8	7	6	5	4	3	2	1	0
Name	**SRCKEY[15:0]**															
Type	R/W															
Reset	0															

SRCKEY If SKEY_EN is enabled, this field represents source key color. If FONT_EN is enabled, this filed represents foreground color. If RECT_EN is enabled, this field represents the constant color for rectangle fill. The color format is the same as CLRFMT in G2D_L0_CON.

© 2015 - 2017 MediaTek Inc.

This document contains information that is proprietary to MediaTek Inc. ("MediaTek") and/or its licensor(s).
Any unauthorized use, reproduction or disclosure of this document in whole or in part is strictly prohibited.

22. Multimedia Subsystem Configuration

22.1. Introduction

The multimedia subsystem contains the multimedia controller, multimedia data path(MDP) and display (DISP). The multimedia controller includes direct memory access and multimedia configuration. MDP is the time sharing pipeline data flow controller to process resizing and rotation by memory access. The display pipeline outputs pixels to display interface with overlay, color enhancement, adaptive ambient light processing.

22.1.1. Features

The multimedia subsystem has the following features:

- APB bus control.
- Multimedia Data Path. It has one read DMA, one resizer, and one write rotator.
- 2D accelerator engine to enhance MMI display and gaming experiences .
- Display pipe line with overlay, color engine, adaptive ambient light processing and display interface controller.

  Supports adaptive ambient light processing for backlight power saving and sunlight visibility improvement

22.2. Block diagram

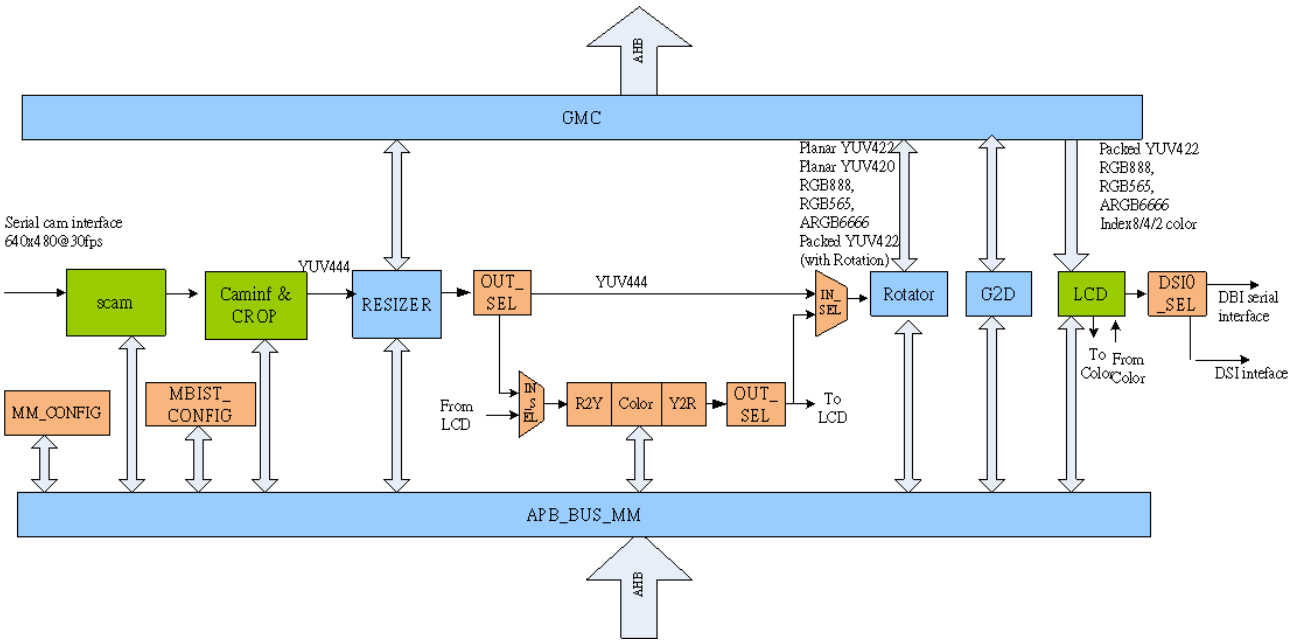

Figure 22-1. Multimedia Subsystem Block Diagram

© 2015 - 2017 MediaTek Inc.

This document contains information that is proprietary to MediaTek Inc. ("MediaTek") and/or its licensor(s).
Any unauthorized use, reproduction or disclosure of this document in whole or in part is strictly prohibited.

22.3. Register definition

Module name: MMSYS_CONFIG Base address: (+A0480000h)

Address	Name	Width	Register Function
A0480000	RESIZER_PATH_SEL	32	MDP Resizer In/Out Selection
A0480004	COLOR_PATH_SEL	32	MDP Color In/Out Selection
A0480008	ROTDMA_PATH_SEL	32	MDP Rotator In/Out Selection
A048000C	APB_OPT_SEL	32	APB buffer enable Selection
A0480010	DSI0_SEL	32	DSI/ DBI interface selection
A0480014	CG_1ST_CON0	32	CG_1ST_CON0
A0480018	CG_1ST_SET0	32	CG_1ST_SET0
A048001C	CG_1ST_CLR0	32	CG_1ST_CLR0
A0480020	HW_CG_DIS_CON0	32	HW_CG_DIS_CON0
A0480024	HW_CG_DIS_SET0	32	HW_CG_DIS_SET0
A0480028	HW_CG_DIS_CLR0	32	HW_CG_DIS_CLR0

A0480000 RESIZER_PATH_SEL MDP Resizer In/Out Selection 00000000

Bit	31	30	29	28	27	26	25	24	23	22	21	20	19	18	17	16
Name																
Type																
Reset																
Bit	15	14	13	12	11	10	9	8	7	6	5	4	3	2	1	0
Name															RESIZER_OUT_SEL	
Type															RW	
Reset															0	0

Bit(s)	Name	Description
1:0	RESIZER_OUT_SEL	**Resizer output selection** 0: output to Rotator 1: output to Color

A0480004 COLOR_PATH_SEL MDP Color In/Out Selection 00000011

Bit	31	30	29	28	27	26	25	24	23	22	21	20	19	18	17	16
Name																
Type																
Reset																
Bit	15	14	13	12	11	10	9	8	7	6	5	4	3	2	1	0
Name											COLOR_IN_				COLOR_OU	

© 2015 - 2017 MediaTek Inc.

This document contains information that is proprietary to MediaTek Inc. ("MediaTek") and/or its licensor(s).
Any unauthorized use, reproduction or disclosure of this document in whole or in part is strictly prohibited.

											SEL				T_SEL	
Type											RW				RW	
Reset											0	1			0	1

Bit(s)	Name	Description
5:4	COLOR_IN_SEL	**Color input selection** 0: input from Resizer 1: input from LCD
1:0	COLOR_OUT_SEL	**Color output selection** 0: output to Rotator 1: output to LCD

A0480008 ROTDMA_PATH_SEL MDP Rotator In/Out Selection 00000000

Bit	31	30	29	28	27	26	25	24	23	22	21	20	19	18	17	16
Name																
Type																
Reset																
Bit	15	14	13	12	11	10	9	8	7	6	5	4	3	2	1	0
Name											ROTATOR_IN_SEL					
Type											RW					
Reset											0	0				

Bit(s)	Name	Description
5:4	ROTATOR_IN_SEL	**Rotator input selection** 0: input from Resizer 1: input from Color

A048000C APB_OPT_SEL APB buffer enable Selection 00000000

Bit	31	30	29	28	27	26	25	24	23	22	21	20	19	18	17	16
Name																
Type																
Reset																
Bit	15	14	13	12	11	10	9	8	7	6	5	4	3	2	1	0
Name																APB_BUFFER_EN
Type																RW
Reset																0

Bit(s)	Name	Description
0	APB_BUFFER_EN	**APB buffer enable selection** 0: apb buffer NOT enable 1: apb buffer enable

A0480010 DSI0_SEL DSI/ DBI interface selection 00000000

Bit	31	30	29	28	27	26	25	24	23	22	21	20	19	18	17	16
Name																
Type																
Reset																
Bit	15	14	13	12	11	10	9	8	7	6	5	4	3	2	1	0
Name																DSI0

This document contains information that is proprietary to MediaTek Inc. ("MediaTek") and/or its licensor(s).
Any unauthorized use, reproduction or disclosure of this document in whole or in part is strictly prohibited.

																_SEL
Type																RW
Reset																0

Bit(s)	Name	Description
0	DSI0_SEL	**interface output selection** 0: output to DBI 1: output to DSI

A0480014 CG_1ST_CON0 CG_1ST_CON0 00000000

Bit	31	30	29	28	27	26	25	24	23	22	21	20	19	18	17	16
Name	CG_1ST_CON0[31:16]															
Type	RW															
Reset	0	0	0	0	0	0	0	0	0	0	0	0	0	0	0	0
Bit	15	14	13	12	11	10	9	8	7	6	5	4	3	2	1	0
Name	CG_1ST_CON0[15:0]															
Type	RW															
Reset	0	0	0	0	0	0	0	0	0	0	0	0	0	0	0	0

Bit(s)	Name	Description
31:0	CG_1ST_CON0	**hardware cg 1st configuration** 0: set dsi free run clock on 1: set dsi free run clock gated

A0480018 CG_1ST_SET0 CG_1ST_SET0 00000000

Bit	31	30	29	28	27	26	25	24	23	22	21	20	19	18	17	16
Name	CG_1ST_SET0[31:16]															
Type	RW															
Reset	0	0	0	0	0	0	0	0	0	0	0	0	0	0	0	0
Bit	15	14	13	12	11	10	9	8	7	6	5	4	3	2	1	0
Name	CG_1ST_SET0[15:0]															
Type	RW															
Reset	0	0	0	0	0	0	0	0	0	0	0	0	0	0	0	0

Bit(s)	Name	Description
31:0	CG_1ST_SET0	**hardware cg 1st set** 0: no effect 1: set dsi free run clock gated

A048001C CG_1ST_CLR0 CG_1ST_CLR0 00000000

Bit	31	30	29	28	27	26	25	24	23	22	21	20	19	18	17	16
Name	CG_1ST_CLR0[31:16]															
Type	RW															
Reset	0	0	0	0	0	0	0	0	0	0	0	0	0	0	0	0
Bit	15	14	13	12	11	10	9	8	7	6	5	4	3	2	1	0
Name	CG_1ST_CLR0[15:0]															
Type	RW															
Reset	0	0	0	0	0	0	0	0	0	0	0	0	0	0	0	0

Bit(s)	Name	Description
31:0	CG_1ST_CLR0	**hardware cg 1st clear** 0: no effect 1: enable DSI freen run clock

© 2015 - 2017 MediaTek Inc.

This document contains information that is proprietary to MediaTek Inc. ("MediaTek") and/or its licensor(s).
Any unauthorized use, reproduction or disclosure of this document in whole or in part is strictly prohibited.

A0480020 HW_CG_DIS_CON0 HW_CG_DIS_CON0 00000000

Bit	31	30	29	28	27	26	25	24	23	22	21	20	19	18	17	16
Name	HW_CG_DIS_CON0[31:16]															
Type	RW															
Reset	0	0	0	0	0	0	0	0	0	0	0	0	0	0	0	0
Bit	15	14	13	12	11	10	9	8	7	6	5	4	3	2	1	0
Name	HW_CG_DIS_CON0[15:0]															
Type	RW															
Reset	0	0	0	0	0	0	0	0	0	0	0	0	0	0	0	0

Bit(s)	Name	Description
31:0	HW_CG_DIS_CON0	**hardware cg dis configuration** 0: enable HW DCM 1: disable HW DCM bit 0: lcd engine clock bit 1: resizer bit 2: rotdma bit 3: caminf bit 4: pad2cam bit 5: g2d bit 6: mm_color bit 7: aal bit 8: dsi engine clock bit 9: gmc bit 10: dsi interface clock

A0480024 HW_CG_DIS_SET0 HW_CG_DIS_SET0 00000000

Bit	31	30	29	28	27	26	25	24	23	22	21	20	19	18	17	16
Name	HW_CG_DIS_SET0[31:16]															
Type	RW															
Reset	0	0	0	0	0	0	0	0	0	0	0	0	0	0	0	0
Bit	15	14	13	12	11	10	9	8	7	6	5	4	3	2	1	0
Name	HW_CG_DIS_SET0[15:0]															
Type	RW															
Reset	0	0	0	0	0	0	0	0	0	0	0	0	0	0	0	0

Bit(s)	Name	Description
31:0	HW_CG_DIS_SET0	**hardware cg dis set** 0: no effect 1: disable HW DCM bit 0: lcd engine clock bit 1: resizer bit 2: rotdma bit 3: caminf bit 4: pad2cam bit 5: g2d bit 6: mm_color bit 7: aal bit 8: dsi engine clock bit 9: gmc bit 10: dsi interface clock

© 2015 - 2017 MediaTek Inc.

This document contains information that is proprietary to MediaTek Inc. ("MediaTek") and/or its licensor(s).
Any unauthorized use, reproduction or disclosure of this document in whole or in part is strictly prohibited.

A0480028 **HW_CG_DIS_CLR0** **HW_CG_DIS_CLR0** **00000000**

Bit	31	30	29	28	27	26	25	24	23	22	21	20	19	18	17	16
Name	HW_CG_DIS_CLR0[31:16]															
Type	RW															
Reset	0	0	0	0	0	0	0	0	0	0	0	0	0	0	0	0
Bit	15	14	13	12	11	10	9	8	7	6	5	4	3	2	1	0
Name	HW_CG_DIS_CLR0[15:0]															
Type	RW															
Reset	0	0	0	0	0	0	0	0	0	0	0	0	0	0	0	0

Bit(s)	Name	Description
31:0	HW_CG_DIS_CLR0	**hardware cg dis clear** 0: no effect 1: enable HW DCM bit 0: lcd engine clock bit 1: resizer bit 2: rotdma bit 3: caminf bit 4: pad2cam bit 5: g2d bit 6: mm_color bit 7: aal bit 8: dsi engine clock bit 9: gmc bit 10: dsi interface clock

© 2015 - 2017 MediaTek Inc.

This document contains information that is proprietary to MediaTek Inc. ("MediaTek") and/or its licensor(s).
Any unauthorized use, reproduction or disclosure of this document in whole or in part is strictly prohibited.

23. LCD display

23.1. General Description

MT2523 contains a versatile LCD controller which is optimized for multimedia applications. This controller supports many types of LCD modules and contains a rich feature set to enhance the functionality. These features are:

- Up to 320 x 320 resolution with 30fps by DBI serial interface, 480x320 resolution with 30fps by DSI interface
- Supports read frame buffer format: RGB565, RGB888, ARGB8888, PARGB8888, ARGB6666, PARGB6666, YUYV422, index-4, index-2 and index-1 color.
- Supports output pixel format: 16-bpp (RGB565), 18-bpp (RGB666) and 24-bpp (RGB888) LCD modules.
- Supports 4 Layers overlay with individual color depth, window size, vertical and horizontal offset, source key, dither and alpha value.
- Supports DBI serial interface:
    - data-pin interface: 4-wire mode, 3-wire mode, single a0 mode, start byte mode, CS stay low mode
    - Dual edge 2-data-pin interface
- Supports DSI interface output. (for detail about DSI, please read DSI data sheet)

© 2015 - 2017 MediaTek Inc.

This document contains information that is proprietary to MediaTek Inc. (“MediaTek”) and/or its licensor(s).
Any unauthorized use, reproduction or disclosure of this document in whole or in part is strictly prohibited.

23.1.1. Block diagram

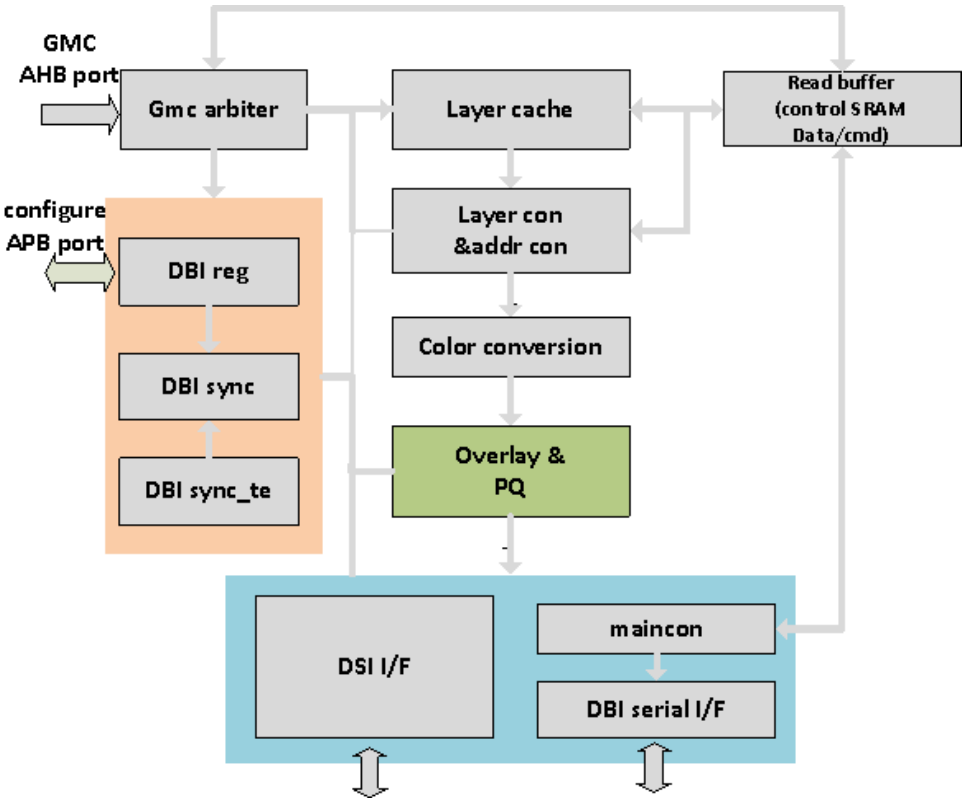

Figure 23-1. *LCD Block Diagram*

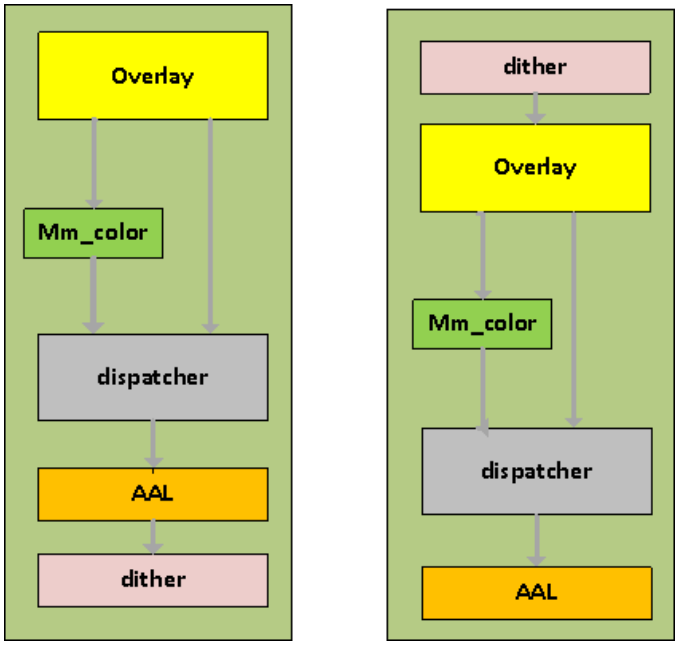

Figure 23-2. *Two kinds of usages of overlay& PQ can be configured by different settings.*

© 2015 - 2017 MediaTek Inc.

This document contains information that is proprietary to MediaTek Inc. ("MediaTek") and/or its licensor(s).
Any unauthorized use, reproduction or disclosure of this document in whole or in part is strictly prohibited.

23.1.2. LCD Operating States

Below is a state diagram detailing the various states of the LCD controller. State transitions depend on the current hardware trigger and tearing settings. Please consult for detailed explanations.

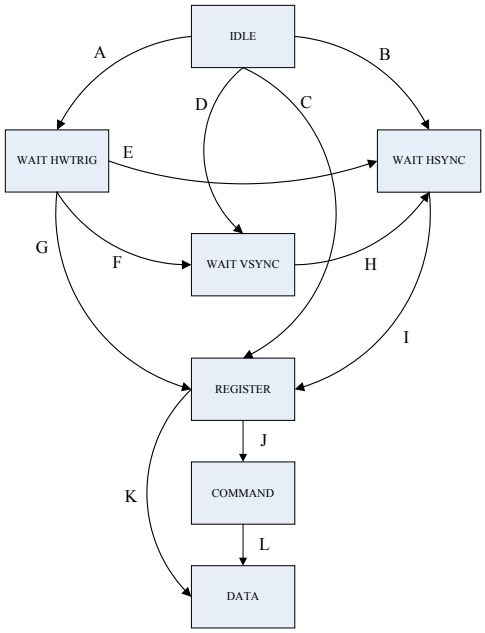

Figure 23-3. LCD State Transitions

Table 23-1. LCD controller internal state

State	Action	Exit State	Exit Condition	IRQ	LCD_STA
IDLE	LCD is idle	If hw_trig_en = 1, then A; If te_en = 1 and te_mode = 1, then D; If te_en = 1 and te_mode = 0, then B; Else C;	LCD_START.START has been changed to 0 from 1.	No IRQ	0x00
WAIT HWTRIG	LCD is waiting for a hardware trigger signal from another engine.	If te_en = 0 and te_mode = 0, then E; If te_en = 1, and te_mode = 1, then F; Else G;	Received hardware trigger signal.	HWTRIG	0x24
WAIT VSYNC	LCD is waiting for a vertical sync signal from the LCM	Always H	LCD has detected a vertical sync signal with length specified in the tearing register	VSYNC	0x28
WAIT HSYNC	If te_mode = 0, then LCD is waiting for	Always I	If te_mode = 0, then LCD must receive a tearing edge and must	SYNC	0x30

This document contains information that is proprietary to MediaTek Inc. (“MediaTek”) and/or its licensor(s).
Any unauthorized use, reproduction or disclosure of this document in whole or in part is strictly prohibited.

	a tearing edge; If te_mode = 1, then LCD horizontal sync signals;		wait for a period of time; If te_mode = 1, then LCD must wait for a certain number of horizontal sync signals.		
REGISTER	LCD is transferring register values to its double registers for use.	If command queue is enabled then J; Else K;	LCD will transition in 1T	REG_CPL	0x20
COMMAND	LCD is transferring command queue data to the LCM	Always L	After LCD has finished transferring all command queue data.	CMDQ_CPL	0x23
DATA	LCD is transferring ROI data to the LCM	If hw_trig_en = 1, then WAIT_HWTRIG; If te_repeat = 1, then WAIT_VSYNC or WAIT_HSYNC; Else IDLE;	After LCD has finished transferring all ROI data to the LCM.	CPL	0x21

23.1.3. Serial Interface Modes

1-data-pin, 4 wire mode (CS, CK, DA, A0)

There is a dedicated pin for command/data indication.

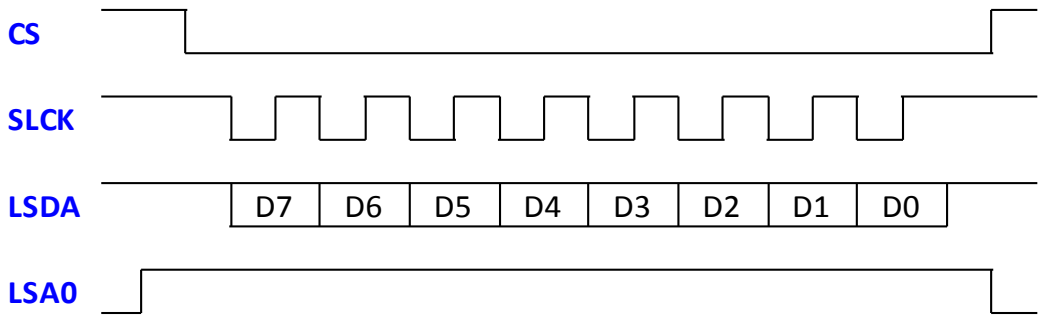

This document contains information that is proprietary to MediaTek Inc. ("MediaTek") and/or its licensor(s).
Any unauthorized use, reproduction or disclosure of this document in whole or in part is strictly prohibited.

3-wire mode (CS,CK,DA)

When there is no dedicated pin for command/data indication, command/data indication must be transmitted by the LSDA pin. It is called as 3-wire mode. A0 signal is transmitted first in every transaction under this mode.

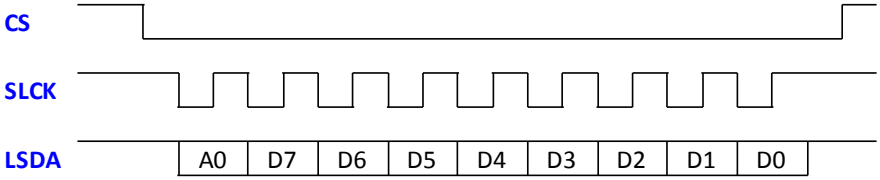

Single A0 mode

During the frame data transmission, the command/data indication is always data. Single A0 mode is to reduce the unnecessary transmission of the repeated A0 (command/data indication). In single A0 mode, frame data transactions only transmit A0 once, which is in the very first transaction.

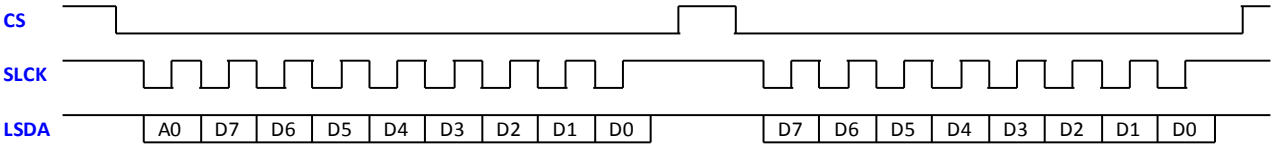

CS Stay Low mode

When transmitting pixel data in the CS Stay Low Mode, instead of asserting CS (chip select) signal after completing every single transmission of every pixel, the CS is asserted only after the whole frame pixel data transmission completes. This can reduce the time spent on the CS setup and hold time.

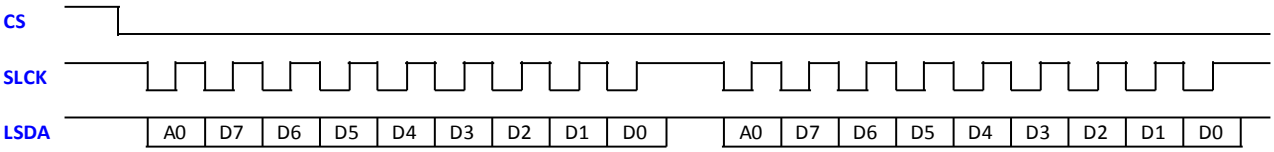

Start Byte mode

In start byte mode, every time CS goes low, serial interface transmit start byte first before sending command or data.

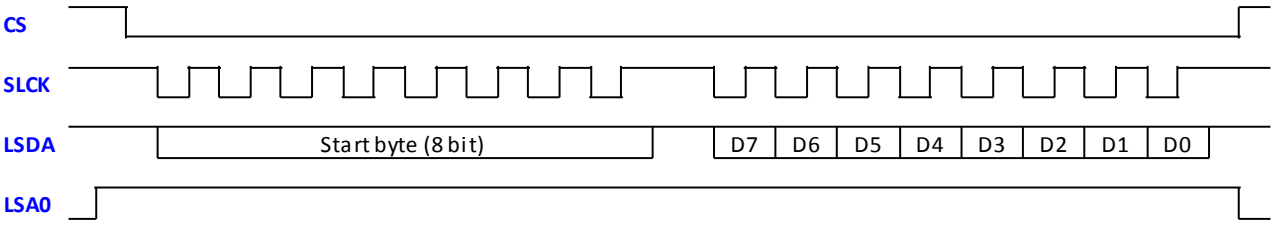

© 2015 - 2017 MediaTek Inc.

This document contains information that is proprietary to MediaTek Inc. (“MediaTek”) and/or its licensor(s).
Any unauthorized use, reproduction or disclosure of this document in whole or in part is strictly prohibited.

Start Byte mode with CS stay low mode

Start byte is always sent when CS goes low; therefore, when combined with CS stay low mode, during the whole frame data transmission, start byte is sent only in the very first transaction.

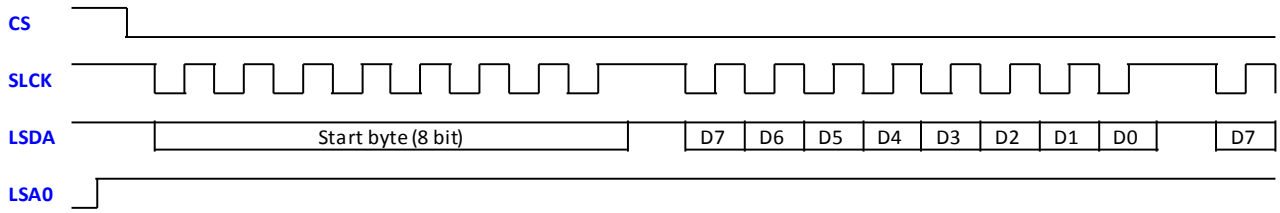

2-Data-Pin mode

Pixel data is transmitted in 2-data-pin protocol instead of in the original 1-data-pin way. MT6250 only supports 2-data-pin protocol with 3-Wire Mode (no dedicated cmd/data indication wire). It is because in the 2-data-pin protocol in MT6250, the additional data pin is actually the original cmd/dat indication wire. As you can see from the figure below, because there is no dedicated cmd/data indication wire anymore, the 2 data pins have to transmit the cmd/dat information ahead of the pixel data bits in every transmission. This overhead can be greatly reduced if the Single A0 Mode is turned on.

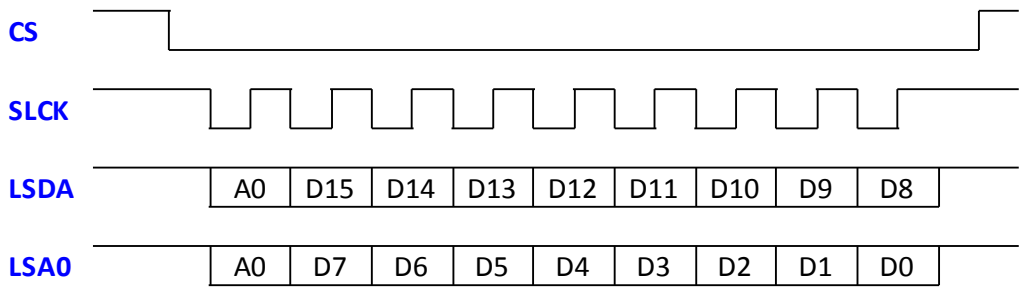

This document contains information that is proprietary to MediaTek Inc. (“MediaTek”) and/or its licensor(s).
Any unauthorized use, reproduction or disclosure of this document in whole or in part is strictly prohibited.

23.2. LCD registers definition

Module name: LCD Base address: (+A0450000h)

Address	Name	Width	Register Function
A0450000	LCD_STA	32	LCD interface status register LCD interface status register
A0450004	LCD_INTEN	16	LCD Interface Interrupt Enable Register This register controls which interrupts will be issued by the LCD Interface. Each bit enable the corresponding interrupt listed in LCD_INTSTA
A0450008	LCD_INTSTA	16	LCD Interface Interrupt Status Register This register indicates which interrupt has been issued by the LCD Interface. Writing 0 will clear a register bit. Writing 1 does nothing.
A045000C	LCD_START	16	LCD Interface Frame Transfer Register This register resets and starts the LCD Interface.
A0450010	LCD_RSTB	16	LCD Parallel/Serial Interface Reset Register Ths register controls the reset pin of all connected external LCM.
A0450018	LCD_SIF_PIX_CON	32	LCD Serial Interface Pixel Data Configuration Register This register controls the pixel transaction of serial interface
A045001C	LCD_SIF_TIMING0	32	LCD Serial Interface 0 Timing Register This register controls the waveform timing of the serial LCM interface 0
A0450020	LCD_SIF_TIMING1	32	LCD Serial Interface 1 Timing Register This register controls the waveform timing of the serial LCM interface 1
A0450028	LCD_SCNF	32	LCD Serial Interface Configuration Register This register has settings for connected LCD-C LCM.
A045002C	LCD_SCNF_CS	32	LCD Serial Interface Chip Select Register This register controls the chip selects for connected LCD-C LCM.
A0450048	LCD_SYNC_LCM_SIZE	32	LCD Sync LCM Size Register Set the current LCM VTT and HTT timing parameters
A045004C	LCD_SYNC_CNT	32	LCD Sync Counter Register TE current scanline and stop line settings
A0450050	LCD_TECON	32	LCD Tearing Control Register This register configures the LCD response to the frame sync (tearing) signal sent from the LCM.
A0450080	LCD_ROICON	32	LCD Region of Interest Control Register This register contains settings used for the Region of Interest.
A0450084	LCD_WROIOFS	32	LCD Region of Interest Window Offset Register Specify the offset of the Region of Interest
A0450088	LCD_WROICADD	32	LCD Region of Interest Command Address Register Specify which address to send commands. Each LCM has a defined address offset.
A045008C	LCD_WROIDADD	32	LCD Region of Interest Data Address Register Specify which address to send data. Each LCM has a defined address

© 2015 - 2017 MediaTek Inc.

This document contains information that is proprietary to MediaTek Inc. (“MediaTek”) and/or its licensor(s).
Any unauthorized use, reproduction or disclosure of this document in whole or in part is strictly prohibited.

Address	Name	Width	Register Function
			offset.
A0450090	LCD_WROISIZE	32	LCD Region of Interest Size Register Specify the size of the Region of Interest
A045009C	LCD_WROI_BGCLR	32	LCD Region of Interest Background Color Register Specify the background color
A04500B0	LCD_L0WINCON	32	LCD Layer 0 Window Control Register L0 setttings
A04500B4	LCD_L0WINKEY	32	LCD Layer 0 Color Key Register
A04500B8	LCD_L0WINOFS	32	LCD Layer 0 Window Display Offset Register
A04500BC	LCD_L0WINADD	32	LCD Layer 0 Window Display Start Address Register
A04500C0	LCD_L0WINSIZE	32	LCD Layer 0 Window Size
A04500C8	LCD_L0WINMOFS	32	LCD Layer 0 Memory Offset
A04500CC	LCD_L0WINPITCH	16	LCD Layer 0 Memory Pitch
A04500E0	LCD_L1WINCON	32	LCD Layer 1 Window Control Register L1 settings
A04500E4	LCD_L1WINKEY	32	LCD Layer 1 Color Key Register
A04500E8	LCD_L1WINOFS	32	LCD Layer 1 Window Display Offset Register
A04500EC	LCD_L1WINADD	32	LCD Layer 1 Window Display Start Address Register
A04500F0	LCD_L1WINSIZE	32	LCD Layer 1 Window Size
A04500F8	LCD_L1WINMOFS	32	LCD Layer 1 Memory Offset
A04500FC	LCD_L1WINPITCH	16	LCD Layer 1 Memory Pitch
A0450110	LCD_L2WINCON	32	LCD Layer 2 Window Control Register L2 settings
A0450114	LCD_L2WINKEY	32	LCD Layer 2 Color Key Register
A0450118	LCD_L2WINOFS	32	LCD Layer 2 Window Display Offset Register
A045011C	LCD_L2WINADD	32	LCD Layer 2 Window Display Start Address Register
A0450120	LCD_L2WINSIZE	32	LCD Layer 2 Window Size
A0450128	LCD_L2WINMOFS	32	LCD Layer 2 Memory Offset
A045012C	LCD_L2WINPITCH	16	LCD Layer 2 Memory Pitch
A0450140	LCD_L3WINCON	32	LCD Layer 3 Window Control Register L3 settings
A0450144	LCD_L3WINKEY	32	LCD Layer 3 Color Key Register
A0450148	LCD_L3WINOFS	32	LCD Layer 3 Window Display Offset Register
A045014C	LCD_L3WINADD	32	LCD Layer 3 Window Display Start Address Register
A0450150	LCD_L3WINSIZE	32	LCD Layer 3 Window Size
A0450158	LCD_L3WINMOFS	32	LCD Layer 3 Memory Offset
A045015C	LCD_L3WINPITCH	16	LCD Layer 3 Memory Pitch

© 2015 - 2017 MediaTek Inc.

This document contains information that is proprietary to MediaTek Inc. (“MediaTek”) and/or its licensor(s).
Any unauthorized use, reproduction or disclosure of this document in whole or in part is strictly prohibited.

Address	Name	Width	Register Function
A0450270	LCD_SIF_STR_BYTE_CON	32	LCD SIF Start Byte Configuration Register
A0450278	LCD_SIF_WR_STR_BYTE	32	LCD SIF Write Start Byte Value
A045027C	LCD_SIF_RD_STR_BYTE	32	LCD SIF Read Start Byte Value
A0450300	LCD_SIF_PAD_INPUT_SELECT	32	LCD serial pad selection
A0450400	LCD_TABLE_INDEX_0_1	32	LCD INDEX Mode 0_1
A0450404	LCD_TABLE_INDEX_2_3	32	LCD INDEX Mode 2_3
A0450408	LCD_TABLE_INDEX_4_5	32	LCD INDEX Mode 4_5
A045040C	LCD_TABLE_INDEX_6_7	32	LCD INDEX Mode 6_7
A0450410	LCD_TABLE_INDEX_8_9	32	LCD INDEX Mode 8_9
A0450414	LCD_TABLE_INDEX_a_b	32	LCD INDEX Mode a_b
A0450418	LCD_TABLE_INDEX_c_d	32	LCD INDEX Mode c_d
A045041C	LCD_TABLE_INDEX_e_f	32	LCD INDEX Mode e_f
A0450F80	LCD_SCMD0	32	LCD Serial Interface Command Port0 This register allows software to directly write or read to Serial Interface.
A0450F90	LCD_SDAT0	32	LCD Serial Interface Data Port0 This register allows software to directly write or read to Serial Interface.
A0450FA0	LCD_SCMD1	32	LCD Serial Interface Command Port1 This register allows software to directly write or read to Serial Interface.
A0450FB0	LCD_SDAT1	32	LCD Serial Interface Data Port1 This register allows software to directly write or read to Serial Interface.

A0450000 LCD_STA LCD interface status register 00000000

Bit	31	30	29	28	27	26	25	24	23	22	21	20	19	18	17	16
Name																
Type																
Reset																
Bit	15	14	13	12	11	10	9	8	7	6	5	4	3	2	1	0
Name								**main_idle**		**GMC**	**BUSY**	**WAIT_SYNC**				**RUN**
Type								RU		RU	RU	RU				RU
Reset								1		0	0	0				0

Bit(s)	Mnemonic	Name	Description
8		main_idle	0: maincon is not idle 1: maincon is idle
6		GMC	**LCD is currently sending a read/write GMC request** 0: not sending GMC request 1: is sening GMC request
5		BUSY	**LCD interface is busy.** 0: LCD is not busy 1: LCD may be in the process of waiting for a hardware trigger signal, waiting for tearing signal, sending commands to command queue, or writing pixels to LCM

© 2015 - 2017 MediaTek Inc.

This document contains information that is proprietary to MediaTek Inc. ("MediaTek") and/or its licensor(s).
Any unauthorized use, reproduction or disclosure of this document in whole or in part is strictly prohibited.

Bit(s)	Mnemonic	Name	Description
4		WAIT_SYNC	**LCD is waiting for LCM tearing-free sync signal** 0: not waiting TE signal 1: is waiting TE signal
0		RUN	**LCD Interface Transfer Bit** 0: LCD Interface is currently not transferring command/pixel data to the external LCM 1: LCD Interface is currently transferring command/pixel data to the external LCM.

A0450004 LCD_INTEN LCD Interface Interrupt Enable Register 0000

Bit	15	14	13	12	11	10	9	8	7	6	5	4	3	2	1	0
Name										APB_TIMEOUT	SYNC					CPL
Type										RW	RW					RW
Reset										0	0					0

Bit(s)	Mnemonic	Name	Description
6		APB_TIMEOUT	**CPU accessing LCD time out interrupt enable** 0: Disable Interrupt 1: Enable Interrupt
5		SYNC	**TE Sync Interrupt Enable** 0: Disable Interrupt 1: Enable Interrupt
0		CPL	**Frame Complete Interrupt Enable** 0: Disable Interrupt 1: Enable Interrupt

A0450008 LCD_INTSTA LCD Interface Interrupt Status Register 0000

Bit	15	14	13	12	11	10	9	8	7	6	5	4	3	2	1	0
Name										APB_TIMEOUT	SYNC					CPL
Type										A1	A1					A1
Reset										0	0					0

Bit(s)	Mnemonic	Name	Description
6		APB_TIMEOUT	**CPU accessing LCD time out interrupt** 0: No Interrupt 1: Indicates the CPU access LCD time out
5		SYNC	**TE Sync Interrupt** 0: No Interrupt 1: Indicates the LCD Interface has received a TE sync signal from the LCM
0		CPL	**Frame Complete Interrupt** 0: No Interrupt 1: Indicates a frame has been completely transferred to the LCM.

© 2015 - 2017 MediaTek Inc.

This document contains information that is proprietary to MediaTek Inc. ("MediaTek") and/or its licensor(s).
Any unauthorized use, reproduction or disclosure of this document in whole or in part is strictly prohibited.

A045000C LCD_START LCD Interface Frame Transfer Register 0000

Bit	15	14	13	12	11	10	9	8	7	6	5	4	3	2	1	0
Name	START															INT_RESET
Type	RW															RW
Reset	0															0

Bit(s)	Mnemonic	Name	Description
15		START	**LCD Interface Start Bit** 0: No action 1: Enable the LCD Interface.
0		INT_RESET	**LCD Interface Software Reset Bit** 0: No action 1: Reset the LCD Interface. This does not reset the LCD Interface configuration registers or command queue.

A0450010 LCD_RSTB LCD Parallel/Serial Interface Reset Register 0001

Bit	15	14	13	12	11	10	9	8	7	6	5	4	3	2	1	0
Name																RSTB
Type																RW
Reset																1

Bit(s)	Mnemonic	Name	Description
0		RSTB	**LCD-B/LCD-C Reset Signal** Directly controls the LCM Reset Pin

A0450018 LCD_SIF_PIX_CON LCD Serial Interface Pixel Data Configuration Register 00000000

Bit	31	30	29	28	27	26	25	24	23	22	21	20	19	18	17	16
Name																
Type																
Reset																
Bit	15	14	13	12	11	10	9	8	7	6	5	4	3	2	1	0
Name	SIF1_CS_STAY_LOW	SIF1_SINGLE_A0	SIF1_PARA_2PIN	SIF1_PIX_2PIN		SIF1_2PIN_SIZE			SIF0_CS_STAY_LOW	SIF0_SINGLE_A0	SIF0_PARA_2PIN	SIF0_PIX_2PIN		SIF0_2PIN_SIZE		
Type	RW	RW	RW	RW		RW			RW	RW	RW	RW		RW		
Reset	0	0	0	0		0	0	0	0	0	0	0		0	0	0

Bit(s)	Mnemonic	Name	Description
15		SIF1_CS_STAY_LOW	**Enable the CS_Stay_Low mode for frame pixel data transmission in both 1-data-pin and 2-data-pin protocol**
14		SIF1_SINGLE_A0	**Enable the Single A0 mode for frame pixel data transmission in 1-data-pin or 2-data-pin protocol. This bit only takes effect when the 3-wire mode is enabled.**
13		SIF1_PARA_2PIN	**Enable 2-data-pin parameter protocol** not recommend to use
12		SIF1_PIX_2PIN	**Enable 2-data-pin protocol**
10:8		SIF1_2PIN_SIZE	**Interface size of Serial interface 0 in 2-data-pin protocol. This size configuration takes effect only when data is actually transmitted in 2-data-pin protocol. Each transaction would be transmitted in bit specified as field description below.**

© 2015 - 2017 MediaTek Inc.

This document contains information that is proprietary to MediaTek Inc. ("MediaTek") and/or its licensor(s).
Any unauthorized use, reproduction or disclosure of this document in whole or in part is strictly prohibited.

Bit(s)	Mnemonic	Name	Description
			010: 16 bits 011: 18 bits 100: 24 bits 110: 12 bits
7		SIF0_CS_STAY_LOW	**Enable the CS_Stay_Low mode for frame pixel data transmission in both 1-data-pin and 2-data-pin protocol**
6		SIF0_SINGLE_A0	**Enable the Single A0 mode for frame pixel data transmission in 1-data-pin or 2-data-pin protocol. This bit only takes effect when the 3-wire mode is enabled.**
5		SIF0_PARA_2PIN	**Enable 2-data-pin parameter protocol** not recommend to use
4		SIF0_PIX_2PIN	**Enable 2-data-pin protocol**
2:0		SIF0_2PIN_SIZE	**Interface size of Serial interface 0 in 2-data-pin protocol. This size configuration takes effect only when data is actually transmitted in 2-data-pin protocol. Each transaction would be transmitted in bit specified as field description below.** 010: 16 bits 011: 18 bits 100: 24 bits 110: 12 bits

A045001C **LCD_SIF_TIMING0** **LCD Serial Interface 0 Timing Register** **00000000**

Bit	31	30	29	28	27	26	25	24	23	22	21	20	19	18	17	16
Name									CSS				CSH			
Type									RW				RW			
Reset									0	0	0	0	0	0	0	0
Bit	15	14	13	12	11	10	9	8	7	6	5	4	3	2	1	0
Name	RD1ST				RD2ND				WR1ST				WR2ND			
Type	RW				RW				RW				RW			
Reset	0	0	0	0	0	0	0	0	0	0	0	0	0	0	0	0

Bit(s)	Mnemonic	Name	Description
23:20		CSS	**chip select setup time**
19:16		CSH	**chip select hold time**
15:12		RD1ST	**The first phase timing of LSCK when read transfer**
11:8		RD2ND	**The second phase timing of LSCK when read transfer**
7:4		WR1ST	**The first phase timing of LSCK when write transfer**
3:0		WR2ND	**The second phase timing of LSCK when write transfer**

A0450020 **LCD_SIF_TIMING1** **LCD Serial Interface 1 Timing Register** **00000000**

Bit	31	30	29	28	27	26	25	24	23	22	21	20	19	18	17	16
Name									CSS				CSH			
Type									RW				RW			
Reset									0	0	0	0	0	0	0	0
Bit	15	14	13	12	11	10	9	8	7	6	5	4	3	2	1	0
Name	RD1ST				RD2ND				WR1ST				WR2ND			
Type	RW				RW				RW				RW			
Reset	0	0	0	0	0	0	0	0	0	0	0	0	0	0	0	0

© 2015 - 2017 MediaTek Inc.

This document contains information that is proprietary to MediaTek Inc. ("MediaTek") and/or its licensor(s).
Any unauthorized use, reproduction or disclosure of this document in whole or in part is strictly prohibited.

Bit(s)	Mnemonic	Name	Description
23:20		CSS	**chip select setup time**
19:16		CSH	**chip select hold time**
15:12		RD1ST	**The first phase timing of LSCK when read transfer**
11:8		RD2ND	**The second phase timing of LSCK when read transfer**
7:4		WR1ST	**The first phase timing of LSCK when write transfer**
3:0		WR2ND	**The second phase timing of LSCK when write transfer**

A0450028 LCD_SCNF LCD Serial Interface Configuration Register 10000000

Bit	31	30	29	28	27	26	25	24	23	22	21	20	19	18	17	16
Name								SIF_HW_CS								
Type								RW								
Reset								0								
Bit	15	14	13	12	11	10	9	8	7	6	5	4	3	2	1	0
Name	SIF1_DIV2	SIF1_SCK_DEF	SIF1_1ST_POL	SIF1_SDI	SIF1_3WIRE	SIF1_SIZE			SIF0_DIV2	SIF0_SCK_DEF	SIF0_1ST_POL	SIF0_SDI	SIF0_3WIRE	SIF0_SIZE		
Type	RW	RW	RW	RW	RW	RW			RW	RW	RW	RW	RW	RW		
Reset	0	0	0	0	0	0	0	0	0	0	0	0	0	0	0	0

Bit(s)	Mnemonic	Name	Description
24		SIF_HW_CS	**Hardware controls serial interface chip select.** 0: the chip select of serial interface is controlled by software by manipulating register LCD_SCNF_CS 1: the chip select of serial interface is controlled by hardware.
15		SIF1_DIV2	**Slow down the serial interface 1 timing** 0: Disable 1: Enable
14		SIF1_SCK_DEF	**The default value of LSCK for serial interface 1 when not transfer data** 0: The default of LSCK is low 1: The default of LSCK is high
13		SIF1_1ST_POL	**The first phase polarity of LSCK for serial interface 1** 0: The first phase of LSCK is low 1: The first phase of LSCK is high
12		SIF1_SDI	**Set to 1 to read data from LSDI pin, otherwise LCD will use the bi-directional LSDA pin**
11		SIF1_3WIRE	**Enable 3 wire mode of serial interface 1. Serial interface will transfer an A0 bit before transferring the MSB of each transcation**
10:8		SIF1_SIZE	**Interface size of Serial interface 1. Each transaction will transmit this many bits.** 000: 8bits 001: 9bits 010: 16bits 011: 18bits 100: 24bits 101: 32bits
7		SIF0_DIV2	**Slow down the serial interface 0 timing** 0: Disable 1: Enable
6		SIF0_SCK_DEF	**The default value of LSCK for serial interface 0 when not transfer data** 0: The default of LSCK is low

© 2015 - 2017 MediaTek Inc.

This document contains information that is proprietary to MediaTek Inc. ("MediaTek") and/or its licensor(s).
Any unauthorized use, reproduction or disclosure of this document in whole or in part is strictly prohibited.

Bit(s)	Mnemonic	Name	Description
			1: The default of LSCK is high
5		SIF0_1ST_POL	**The first phase polarity of LSCK for serial interface 0** 0: The first phase of LSCK is low 1: The first phase of LSCK is high
4		SIF0_SDI	**Set to 1 to read data from LSDI pin, otherwise LCD will use the bi-directional LSDA pin**
3		SIF0_3WIRE	**Enable 3 wire mode of serial interface 0. Serial interface will transfer an A0 bit before transferring the MSB of each transcation**
2:0		SIF0_SIZE	**Interface size of Serial interface 0. Each transaction will transmit this many bits.** 000: 8bits 001: 9bits 010: 16bits 011: 18bits 100: 24bits 101: 32bits

A045002C LCD_SCNF_CS LCD Serial Interface Chip Select Register 00000003

Bit	31	30	29	28	27	26	25	24	23	22	21	20	19	18	17	16
Name																
Type																
Reset																
Bit	15	14	13	12	11	10	9	8	7	6	5	4	3	2	1	0
Name															CS1	CS0
Type															RW	RW
Reset															1	1

Bit(s)	Mnemonic	Name	Description
1		CS1	**Directly control the value of the Chip Select pin LSCE1. This bit takes effect only when LCD_SIF_CON.SIF_HW_CS=0.**
0		CS0	**Directly control the value of the Chip Select pin LSCE0. This bit takes effect only when LCD_SIF_CON.SIF_HW_CS=0.**

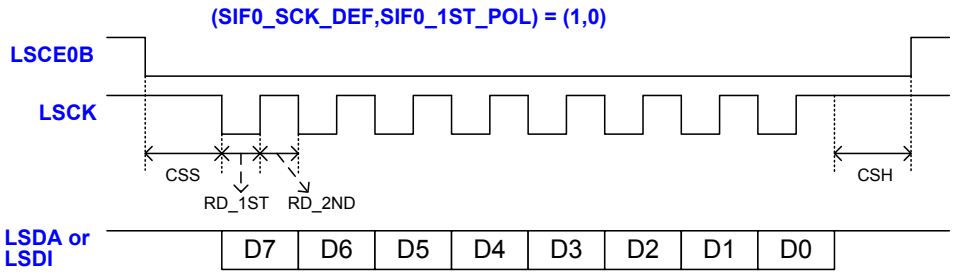

CSS = (LCD_SIF0_TIMING.CSS*(LCD_SIF_CON.SIF0_DIV2+1)) + 1;
CSH = (LCD_SIF0_TIMING.CSH*(LCD_SIF_CON.SIF0_DIV2+1)) + 1;
RD_1ST = (LCD_SIF0_TIMING.RD_1ST*(LCD_SIF_CON.SIF0_DIV2+1)) + 1;
RD_2ND = (LCD_SIF0_TIMING.RD_2ND*(LCD_SIF_CON.SIF0_DIV2+1)) + 1;
All the above parameter are in unit of lcd working clock cycle time, 9.615384ns.

Figure 23-4. LCD serial interface read timing diagram

© 2015 - 2017 MediaTek Inc.

This document contains information that is proprietary to MediaTek Inc. ("MediaTek") and/or its licensor(s).
Any unauthorized use, reproduction or disclosure of this document in whole or in part is strictly prohibited.

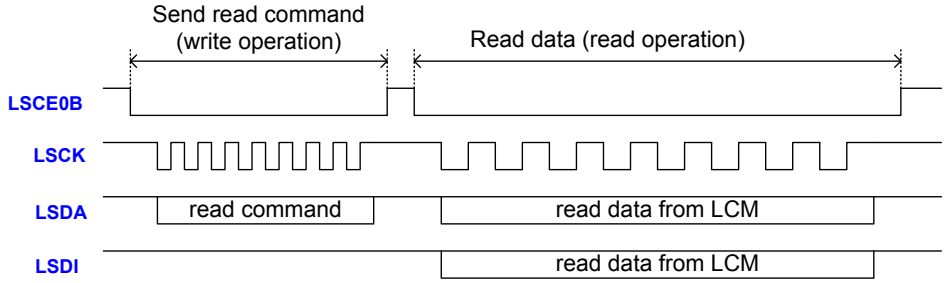

Figure 23-5. LCD serial interface read waveform example

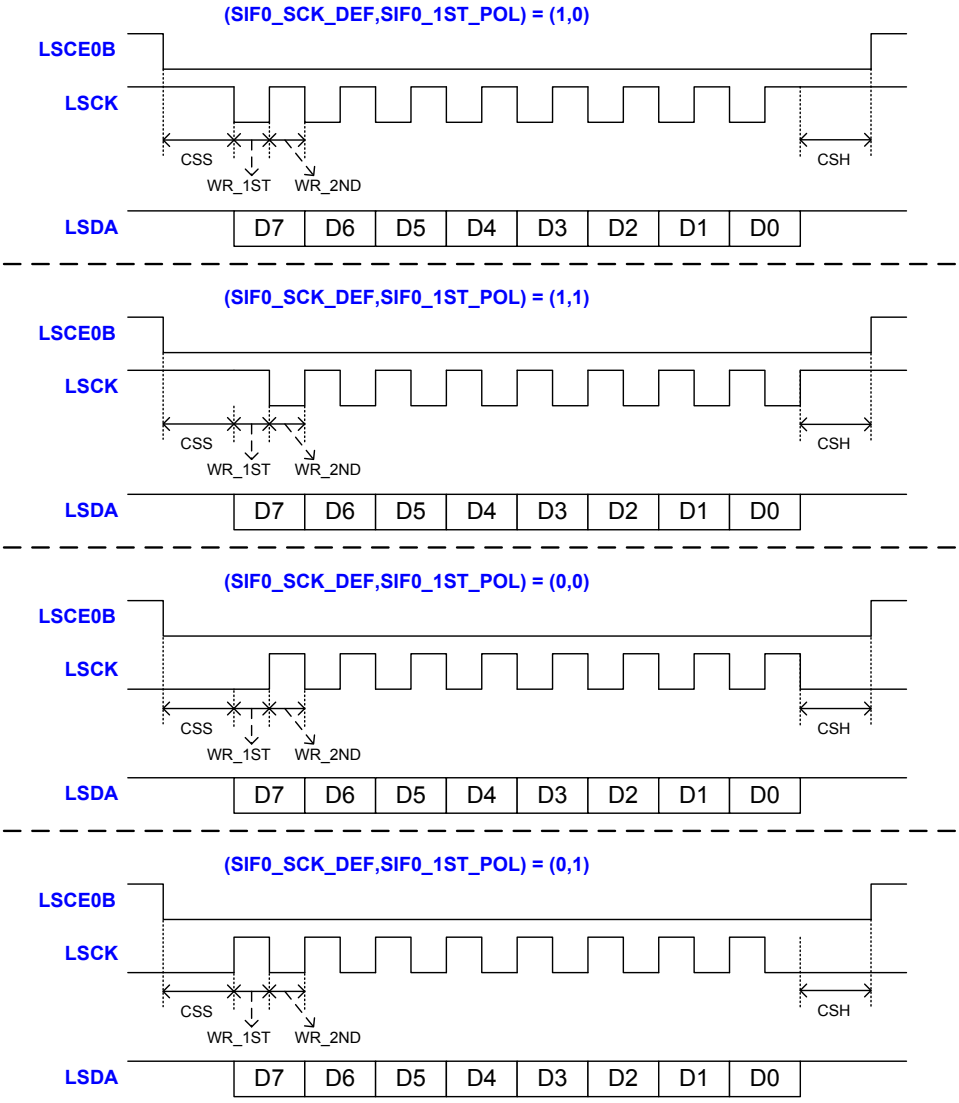

CSS = (LCD_SIF0_TIMING.CSS*(LCD_SIF_CON.SIF0_DIV2+1)) + 1;
CSH = (LCD_SIF0_TIMING.CSH*(LCD_SIF_CON.SIF0_DIV2+1)) + 1;
WR_1ST = (LCD_SIF0_TIMING.WR_1ST*(LCD_SIF_CON.SIF0_DIV2+1)) + 1;
WR_2ND = (LCD_SIF0_TIMING.WR_2ND*(LCD_SIF_CON.SIF0_DIV2+1)) + 1;
All the above parameter are in unit of lcd working clock cycle time, 9.615384ns.

Figure 23-6. LCD serial interface write timing diagram

© 2015 - 2017 MediaTek Inc.

This document contains information that is proprietary to MediaTek Inc. ("MediaTek") and/or its licensor(s).
Any unauthorized use, reproduction or disclosure of this document in whole or in part is strictly prohibited.

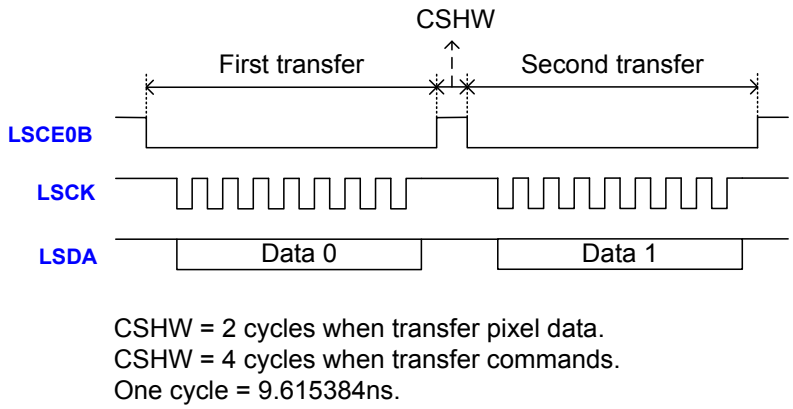

Figure 23-7. LCD serial interface write waveform example

Tearing Control

When moving pictures are played, LCD controller must be synchronized to LCM scanning timing to prevent tearing on screen. The LCD controller provides two methods to synchronize to LCM, and one time-out counter to get LCM scanning speed.

The first synchronous method is “hardware TE” mode. In this mode, LCD controller can be programmed to wait certain time interval after LCM TE signal is received, and then starts to update LCM.

The second synchronous method is “read scan line” mode, which doesn’t need to connect TE signal from LCM to LCD controller. Instead, this mode uses reading LCM current scan line to synchronize to LCM scanning.

If we know the LCM scanning speed and LCM current scan line, we can use a counter to synchronize to LCM, and wait a proper time to start transferring to prevent tearing. “Read scan line” mode provides the capability to read LCM current scan line. And the time-out counter provides the capability to get the LCM scanning speed.

Sync Mode 0: “Hardware TE” mode

In sync mode = 0, LCD will start to transfer data to LCM after receiving TE signal plus counting a set number of horizontal sync lines. The LCM scanning time of each horizontal sync line is set by LCD_SYNC_LCM_SIZE.HTT, which indicates how long a LCM horizontal line is in units of 16*T, where T is the cycle time of LCD working clock. Cycle time is 9.615384 ns (104MHz). After receiving a TE edge, LCD will count LCD_SYNC_CNT.WAITLINE number of lines and then begin updating the new frame to the LCM. To use this mode, please follow these steps:

- Set LCD_TECON.SYNC_MODE = 0 and LCD_TECON.SYNC_EN = 1
- Set LCD_SYNC_LCM_SIZE.HTT to the correct value. See for more information on this. Also see below “HTT Calibration” section for more information on this.
- Set LCD_SYNC_CNT.WAITLINE to the number of lines you wish to wait before updating the LCM.
- Set other registers (ROI, Layer, etc.) and start the LCD controller by setting LCD_START.START = 1 (from 0).

© 2015 - 2017 MediaTek Inc.

This document contains information that is proprietary to MediaTek Inc. (“MediaTek”) and/or its licensor(s).
Any unauthorized use, reproduction or disclosure of this document in whole or in part is strictly prohibited.

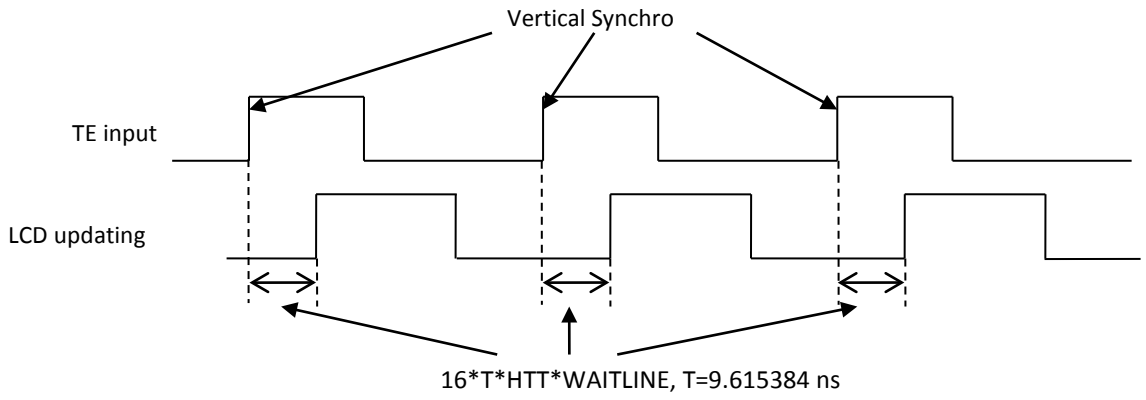

Figure 23-8. SYNC_MODE = 0

Sync Mode 1: "Read scan line" mode

In sync mode 1, LCD will not use the TE pin to detect the LCM scan line position. Instead, software must read the LCM scan line from the LCM register. When software reads a specified port, LCD will interpret this and automatically begin its internal TE counter at the read LCM scan line position. Scan line 0 indicates the beginning (the first edge, either rising or falling edge) of VSYNC as shown in . The LCD ROI begins during the V active region (vact).

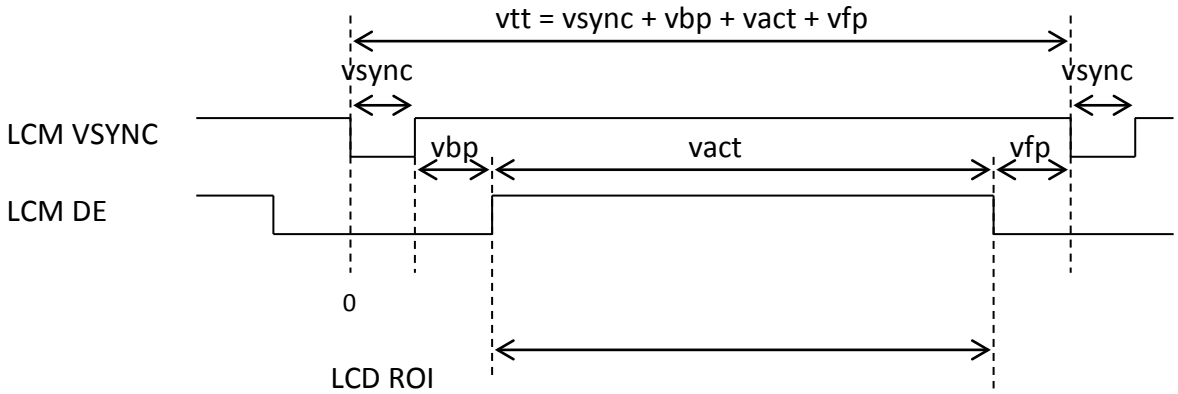

vtt: vertical total lines
vsync: vertical sync width
vbp: vertical back porch
vfp: vertical front porch
vact: vertical active region

Figure 23-9. LCM Scan Line Timing

© 2015 - 2017 MediaTek Inc.
This document contains information that is proprietary to MediaTek Inc. ("MediaTek") and/or its licensor(s).
Any unauthorized use, reproduction or disclosure of this document in whole or in part is strictly prohibited.

Typically, the scan line register is divided into 2 parameters (each parameter is 1 byte) and 1 dummy read. To read the current LCM scan line, software uses the following steps: (assume the LCM is on Serial CS0)

1. Set LCD_TECON.SYNC_MODE = 1 and LCD_TECON.SYNC_EN = 1
2. Set LCD_SYNC_LCM.VTT size to the number of LCM vertical total lines including blanking.
3. Set LCD_SYNC_LCM.HTT to the correct timing parameter. See below “HTT Calibration” section for more information on this.
4. Set LCD_SYNC_CNT.WAITLINE to the LCM scan line number where you wish to start updating the frame.
5. Start the LCD by setting LCD_START.START = 1 (from 0).
6. Write “read scan line command” to LCD_SCMD0.
7. If the LCM needs a dummy read, then read LCD_SDAT0. This step can be skipped if no dummy read is required.
8. Read port LCD_SDAT0_SYNC0 to latch the first parameter of LCM current scan line into LCD internal counter.
9. Read port LCD_SDAT0_SYNC1 to latch the second parameter into the LCM internal counter and begin the TE counter. SW must use an 8 bit read for this parameter or else the top byte will be covered. If the interface size is greater then 8/9 bits and there is only 1 parameter to read, the SW may skip step 7 and only use step 8. In this case, SW may use a 16 or 32 bit read to this port.

In , the LCM has 240 total horizontal lines including blanking. Assume we want LCD to begin updating at Point A because the partial update begins at this point. In this case, we should set VTT = 240 and WAITLINE = 3. When SW takes steps 6 and 7 above, assume the returned value is Point B. This means the TE internal counter will count up to Line 239 and loop back to 0. The counter will count until Point A is reached and then begin updating the LCM. Note that Line 0 is typically not within the active LCM region.

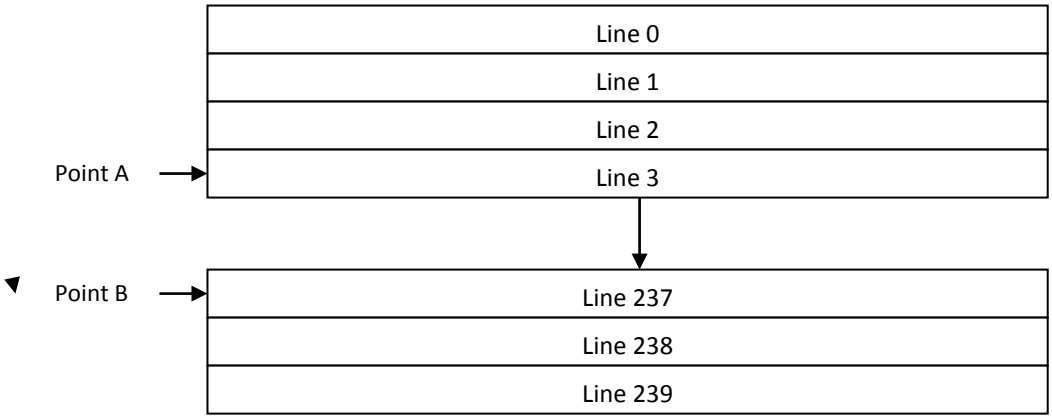

Figure 23-10. TE Scan Line Example

© 2015 - 2017 MediaTek Inc.

This document contains information that is proprietary to MediaTek Inc. (“MediaTek”) and/or its licensor(s).
Any unauthorized use, reproduction or disclosure of this document in whole or in part is strictly prohibited.

Table 23-2. ***LCD TE Ports***

Name	Function
LCD_SDAT*_SYNC0	Latches the first parameter of the LCM current scan line into the TE counter. The first parameter must be the high byte of the LCM current scan line.
LCD_SDAT*_SYNC1	Latches the second parameter of the LCM current scan line into the TE counter and begin the counter.
LCD_SDAT*_HTT	Read once to begin HTT calculation. Read again to stop the calculation. This can only be used when LCD is idle.

HTT Calibration

The HTT parameter can be calculated from the LCM datasheet. However, if SW wants a more automatic method to calculate HTT, then SW can use the HTT timeout interrupt mechanism. The steps are as follows:

1. Make sure LCD is in the IDLE state (LCD_START.START = 0 and LCD_STA = 0).
2. Set HTT = 256.
3. Set LCD_CALC_HTT.TIMEOUT to 128.
4. Enable the HTT timeout interrupt in LCD_INTEN.HTT.
5. Read LCM current scan line and start HTT timeout counter.
   - 5.1 Write “read scan line command” to LCD_SCMD0, or other interface command port depending on which interface is used.
   - 5.2 If the LCM needs a dummy read, then read LCD_SDAT0. This step can be skipped if no dummy read is required.
   - 5.3 If there are two parameters of LCM current scan line, read port LCD_SDAT0 to get the first parameter of LCM current scan line. If there is only one parameter, this step should be skipped.
   - 5.4 Read LCD_SDAT0_HTT to get the second parameter (or to get the only one parameter) of LCM current scan line and also start HTT timeout counter. Software must use the data read in step 5.3 and 5.4 to construct LCM current scan line.
6. LCD will begin counting cycles. When LCD_CALC_HTT.COUNT reaches LCD_CALC_HTT.TIMEOUT, LCD will issue the HTT timeout interrupt. Software should do step 5 again to get LCM current scan line and stop HTT timeout counter..
7. Assume the first scan line read in step5 is SE0 and the second read in step6 is SE1. Then the scanning time of one line is:

   if (SE1>SE0)

   Scanning time of one line (in unit of LCD working clock cycle)

   = (LCD_CALC_HTT.COUNT*256) / (SE1 – SE0)

   else

   Scanning time of one line (in unit of LCD working clock cycle)

   = (LCD_CALC_HTT.COUNT*256) / (SE1 – SE0 + vertical total lines including blanking)

© 2015 - 2017 MediaTek Inc.

This document contains information that is proprietary to MediaTek Inc. (“MediaTek”) and/or its licensor(s).
Any unauthorized use, reproduction or disclosure of this document in whole or in part is strictly prohibited.

8. The scanning time of one line can be used in both sync mode 0 and mode 1 by setting

   LCD_SYNC_LCM_SIZE.HTT = (Scanning time of one line)/16;

A0450048 LCD_SYNC_LCM_SIZE LCD Sync LCM Size Register 00010001

Bit	31	30	29	28	27	26	25	24	23	22	21	20	19	18	17	16
Name					VTT											
Type					RW											
Reset					0	0	0	0	0	0	0	0	0	0	0	1
Bit	15	14	13	12	11	10	9	8	7	6	5	4	3	2	1	0
Name							HTT									
Type							RW									
Reset							0	0	0	0	0	0	0	0	0	1

Bit(s)	Mnemonic	Name	Description
27:16		VTT	**Vertical Timing** Set the number of horizontal LCM lines including blanking lines. VTT must be greater than 0.
9:0		HTT	**Horizontal Timing** Indicate how long a LCM horizontal line is in unites of 16*T which T is the LCD cycle time.

A045004C LCD_SYNC_CNT LCD Sync Counter Register 00000001

Bit	31	30	29	28	27	26	25	24	23	22	21	20	19	18	17	16
Name					SCANLINE											
Type					RU											
Reset					0	0	0	0	0	0	0	0	0	0	0	0
Bit	15	14	13	12	11	10	9	8	7	6	5	4	3	2	1	0
Name					WAITLINE											
Type					RW											
Reset					0	0	0	0	0	0	0	0	0	0	0	1

Bit(s)	Mnemonic	Name	Description
27:16		SCANLINE	**Current TE counter value**
11:0		WAITLINE	**TE Delay** SCANLINE will count until it reaches this value and a TE interrupt will be issued (if enabled). LCD will then begin updating a frame. WAITLINE must be greater than 0.

A0450050 LCD_TECON LCD Tearing Control Register 00000000

Bit	31	30	29	28	27	26	25	24	23	22	21	20	19	18	17	16
Name																
Type																
Reset																
Bit	15	14	13	12	11	10	9	8	7	6	5	4	3	2	1	0
Name	SW_TE					TE_COUNTER_EN	DSI_END_CTL	DSI_START_CTL					TE_REPEAT	SYNC_MODE	TE_EDGE_SEL	SYNC_EN
Type	RW					RW	RW	RW					RW	RW	RW	RW
Reset	0					0	0	0					0	0	0	0

© 2015 - 2017 MediaTek Inc.

This document contains information that is proprietary to MediaTek Inc. ("MediaTek") and/or its licensor(s).
Any unauthorized use, reproduction or disclosure of this document in whole or in part is strictly prohibited.

Bit(s)	Mnemonic	Name	Description
15		SW_TE	**Software TE** Software emulated TE signal. Write this bit from 0 to 1 will let LCD act like a TE signal has been received. This is only used for SYNC_MODE = 0.
10		TE_COUNTER_EN	**The way DSI leaves wait TE state** 0: by DSI's TE signal 1: by LCD's TE counter
9		DSI_END_CTL	**DSI produce eof** 0: end indication is by DSI vde falling 1: end indication is by DSI frame done signal
8		DSI_START_CTL	**DSI produces sof** 0: start byDSI vsync falling 1: start by DSI TE event
3		TE_REPEAT	**repeat mode** 0: update LCM once every TE signal coming 1: repeat updaing LCM after TE signal coming
2		SYNC_MODE	**TE Sync Mode:** Select the TE type to use (0: LCd working cycle time *16 *HTT *LINES ns) 0: LCD updates when a TE edge is detected and a specified delay has passed. 1: LCD updates when software read the current LCM scanline and LCD has counted from the current scanline the specified update scanline.
1		TE_EDGE_SEL	**TE Edge Select** Select which edge is used to detect a TE signal 0: Rising edge 1: Falling edge
0		SYNC_EN	**Sync Enable** Enable or Disable LCD TE control 0: Disable 1: Enable

A0450080 LCD_ROICON LCD Region of Interest Control Register 00000000

Bit	31	30	29	28	27	26	25	24	23	22	21	20	19	18	17	16
Name	EN0	EN1	EN2	EN3		COLOR_EN	IF24	SEND_RES_MOD								
Type	RW	RW	RW	RW		RW	RW	RW								
Reset	0	0	0	0		0	0	0								
Bit	15	14	13	12	11	10	9	8	7	6	5	4	3	2	1	0
Name	ENC		COMMAND						FMT							
Type	RW		RW						RW							
Reset	0		0	0	0	0	0	0	0	0	0	0	0	0	0	0

Bit(s)	Mnemonic	Name	Description
31		EN0	**Layer 0 window enable control**
30		EN1	**Layer 1 window enable control**
29		EN2	**Layer 2 window enable control**
28		EN3	**Layer 3 window enable control**
26		COLOR_EN	**Enable the data path through mm_color** 0: Disable the data path through mm_color 1: Enable the data path through mm_color
25		IF24	**24 Bit Data bus Enable:**

© 2015 - 2017 MediaTek Inc.

This document contains information that is proprietary to MediaTek Inc. ("MediaTek") and/or its licensor(s).
Any unauthorized use, reproduction or disclosure of this document in whole or in part is strictly prohibited.

Bit(s)	Mnemonic	Name	Description
			0: ROI BUS width set to FMT specified width 1: ROI BUS width set to 24 bit width
24		SEND_RES_MOD	**Send Residual Odd Pixel** When the LCD Interface is configured to send 2 pixels/cycle or 2 pixels/3 cycles and the ROI width is odd, the last pixel of each line will not form a pixel pair. If the ROI height is odd as well, the last pixel of the frame will also not be a pixel pair. In each case, the LCD Interface will send extra data to fill in for the missing pixel. This setting allows one to choose how the extra data will be sent. 0: Send the residual odd pixel per frame. In this mode, the last pixel of a line is combined with an extra byte and sent to LCM. LCD driver should not care this extra byte. EX: ROI is 3x2, the output sequence is R0G0 --- pixel0 of line 0 B0R1 G1B1 R2G2 B2R1 --- LCD driver should not care R1 R0G0 --- pixel 0 of line 1 B0R1 G1B1 R2G2 B2R1 --- LCD driver should not care R1 1: Send the residual odd pixel per frame. In this mode, the last pixel of a line is combined with the first pixel of the next line as a two-pixel-pair, and is sent to LCM EX: ROI is 3x2, the output sequence is R0G0 --- pixel0 of line 0 B0R1 G1B1 R2G2 B2R0 --- pixel 0 of line 1 G0B0 R1G1 B1R2 G2B2 R0G0 --- pixel 0 of line 2 B0R1 G1B1 R2G2 B2R1 --- LCD driver should not care R1.
15		ENC	**Command Transfer Enable Control** 0: Only send pixel data to LCM, not send commands in command queue. 1: Send commands in command queue first, and then send pixel data to LCM. The number of commands to be sent is specified by COMMAND.
13:8		COMMAND	**Number of commands to be sent to LCD module. N means N+1 commands will be sent. Maximum value is 63.**
7:0		FMT	**ROI Transfer Format** Specify the interface size and transfer color format of the ROI. The interface size should match the Parallel/Serial Interface size setting. FORMAT is divided into several fields: Bit 0: Sequence (0:BGR, 1: RGB) Bit 1: Significance Bit 2: Padding Bit 5-3: Color format (010: RGB565, 011: RGB666, 100: RGB888) Bit 7-6: Interface size (00: 8 bit, 01: 16 bit, 10: 9 bit, 11: 18 bit)

© 2015 - 2017 MediaTek Inc.

This document contains information that is proprietary to MediaTek Inc. ("MediaTek") and/or its licensor(s).
Any unauthorized use, reproduction or disclosure of this document in whole or in part is strictly prohibited.

Table 23-3. ***WROICON.FORMAT List***

format	I/F width	padding	significance	sequence	throughput (pixel/cycle)	output sequence
RGB565	8	x	0	0	1pixel/2cycle	$R_4R_3R_2R_1R_0G_5G_4G_3$ $G_2G_1G_0B_4B_3B_2B_1B_0$
		x	0	1	1pixel/2cycle	$B_4B_3B_2B_1B_0G_5G_4G_3$ $G_2G_1G_0R_4R_3R_2R_1R_0$
		x	1	0	1pixel/2cycle	$G_2G_1G_0B_4B_3B_2B_1B_0$ $R_4R_3R_2R_1R_0G_5G_4G_3$
		x	1	1	1pixel/2cycle	$G_2G_1G_0R_4R_3R_2R_1R_0$ $B_4B_3B_2B_1B_0G_5G_4G_3$
	9	x	0	0	1pixel/2cycle	$G_3R_4R_3R_2R_1R_0G_5G_4G_3$ $B_0G_2G_1G_0B_4B_3B_2B_1B_0$
		x	0	1	1pixel/2cycle	$G_3B_4B_3B_2B_1B_0G_5G_4G_3$ $R_0G_2G_1G_0R_4R_3R_2R_1R_0$
		x	1	0	1pixel/2cycle	$B_0G_2G_1G_0B_4B_3B_2B_1B_0$ $G_3R_4R_3R_2R_1R_0G_5G_4G_3$
		x	1	1	1pixel/2cycle	$R_0G_2G_1G_0R_4R_3R_2R_1R_0$ $G_3B_4B_3B_2B_1B_0G_5G_4G_3$
	16	x	x	0	1pixel/1cycle	$R_4R_3R_2R_1R_0G_5G_4G_3G_2G_1G_0B_4B_3B_2B_1B_0$
		x	x	1	1pixel/1cycle	$B_4B_3B_2B_1B_0G_5G_4G_3G_2G_1G_0R_4R_3R_2R_1R_0$
	18	x	x	0	1pixel/1cycle	$xxR_4R_3R_2R_1R_0G_5G_4G_3G_2G_1G_0B_4B_3B_2B_1B_0$
		x	x	1	1pixel/1cycle	$xxB_4B_3B_2B_1B_0G_5G_4G_3G_2G_1G_0R_4R_3R_2R_1R_0$
RGB666	8	0	0	0	1pixel/3cycle	$R_5R_4R_3R_2R_1R_0xx$ $G_5G_4G_3G_2G_1G_0xx$ $B_5B_4B_3B_2B_1B_0xx$
		0	0	1	1pixel/3cycle	$B_5B_4B_3B_2B_1B_0xx$ $G_5G_4G_3G_2G_1G_0xx$ $R_5R_4R_3R_2R_1R_0xx$
		0	1	0	1pixel/3cycle	$B_5B_4B_3B_2B_1B_0xx$ $G_5G_4G_3G_2G_1G_0xx$ $R_5R_4R_3R_2R_1R_0xx$
		0	1	1	1pixel/3cycle	$R_5R_4R_3R_2R_1R_0xx$ $G_5G_4G_3G_2G_1G_0xx$ $B_5B_4B_3B_2B_1B_0xx$
		1	0	0	1pixel/3cycle	$xxR_5R_4R_3R_2R_1R_0$ $xxG_5G_4G_3G_2G_1G_0$ $xxB_5B_4B_3B_2B_1B_0$
		1	0	1	1pixel/3cycle	$xxB_5B_4B_3B_2B_1B_0$ $xxG_5G_4G_3G_2G_1G_0$ $xxR_5R_4R_3R_2R_1R_0$

© 2015 - 2017 MediaTek Inc.

This document contains information that is proprietary to MediaTek Inc. (“MediaTek”) and/or its licensor(s).
Any unauthorized use, reproduction or disclosure of this document in whole or in part is strictly prohibited.

format	I/F width	padding	significance	sequence	throughput (pixel/cycle)	output sequence
		1	1	0	1pixel/3cycle	$xxB_5B_4B_3B_2B_1B_0$ $xxG_5G_4G_3G_2G_1G_0$ $xxR_5R_4R_3R_2R_1R_0$
		1	1	1	1pixel/3cycle	$xxR_5R_4R_3R_2R_1R_0$ $xxG_5G_4G_3G_2G_1G_0$ $xxB_5B_4B_3B_2B_1B_0$
	9	x	0	0	1pixel/2cycle	$R_5R_4R_3R_2R_1R_0G_5G_4G_3$ $G_2G_1G_0B_5B_4B_3B_2B_1B_0$
		x	0	1	1pixel/2cycle	$B_5B_4B_3B_2B_1B_0G_5G_4G_3$ $G_2G_1G_0R_5R_4R_3R_2R_1R_0$
		x	1	0	1pixel/2cycle	$G_2G_1G_0B_5B_4B_3B_2B_1B_0$ $R_5R_4R_3R_2R_1R_0G_5G_4G_3$
		x	1	1	1pixel/2cycle	$G_2G_1G_0R_5R_4R_3R_2R_1R_0$ $B_5B_4B_3B_2B_1B_0G_5G_4G_3$
RGB666	16	0	0	0	2pixel/3cycle	$R_5R_4R_3R_2R_1R_0G_5G_4G_3G_2G_1G_0xxxx$ $B_5B_4B_3B_2B_1B_0R_5R_4R_3R_2R_1R_0xxxx$ $G_5G_4G_3G_2G_1G_0B_5B_4B_3B_2B_1B_0xxxx$
		0	0	1	2pixel/3cycle	$B_5B_4B_3B_2B_1B_0G_5G_4G_3G_2G_1G_0xxxx$ $R_5R_4R_3R_2R_1R_0B_5B_4B_3B_2B_1B_0xxxx$ $G_5G_4G_3G_2G_1G_0R_5R_4R_3R_2R_1R_0xxxx$
		0	1	0	2pixel/3cycle	$G_5G_4G_3G_2G_1G_0B_5B_4B_3B_2B_1B_0xxxx$ $B_5B_4B_3B_2B_1B_0R_5R_4R_3R_2R_1R_0xxxx$ $R_5R_4R_3R_2R_1R_0G_5G_4G_3G_2G_1G_0xxxx$
		0	1	1	2pixel/3cycle	$G_5G_4G_3G_2G_1G_0R_5R_4R_3R_2R_1R_0xxxx$ $R_5R_4R_3R_2R_1R_0B_5B_4B_3B_2B_1B_0xxxx$ $B_5B_4B_3B_2B_1B_0G_5G_4G_3G_2G_1G_0xxxx$
		1	0	0	2pixel/3cycle	$xxxxR_5R_4R_3R_2R_1R_0G_5G_4G_3G_2G_1G_0$ $xxxxB_5B_4B_3B_2B_1B_0R_5R_4R_3R_2R_1R_0$ $xxxxG_5G_4G_3G_2G_1G_0B_5B_4B_3B_2B_1B_0$
		1	0	1	2pixel/3cycle	$xxxxB_5B_4B_3B_2B_1B_0G_5G_4G_3G_2G_1G_0$ $xxxxR_5R_4R_3R_2R_1R_0B_5B_4B_3B_2B_1B_0$ $xxxxG_5G_4G_3G_2G_1G_0R_5R_4R_3R_2R_1R_0$
		1	1	0	2pixel/3cycle	$xxxxG_5G_4G_3G_2G_1G_0B_5B_4B_3B_2B_1B_0$ $xxxxB_5B_4B_3B_2B_1B_0R_5R_4R_3R_2R_1R_0$ $xxxxR_5R_4R_3R_2R_1R_0G_5G_4G_3G_2G_1G_0$
		1	1	1	2pixel/3cycle	$xxxxG_5G_4G_3G_2G_1G_0R_5R_4R_3R_2R_1R_0$ $xxxxR_5R_4R_3R_2R_1R_0B_5B_4B_3B_2B_1B_0$ $xxxxB_5B_4B_3B_2B_1B_0G_5G_4G_3G_2G_1G_0$
	18	x	x	0	1pixel/1cycle	$R_5R_4R_3R_2R_1R_0G_5G_4G_3G_2G_1G_0B_5B_4B_3B_2B_1B_0$
		x	x	1	1pixel/1cycle	$B_5B_4B_3B_2B_1B_0G_5G_4G_3G_2G_1G_0R_5R_4R_3R_2R_1R_0$
	24	0	x	0	1pixel/1cycle	$R_5R_4R_3R_2R_1R_0xxG_5G_4G_3G_2G_1G_0xxB_5B_4B_3B_2B_1B_0xx$

© 2015 - 2017 MediaTek Inc.

This document contains information that is proprietary to MediaTek Inc. ("MediaTek") and/or its licensor(s).
Any unauthorized use, reproduction or disclosure of this document in whole or in part is strictly prohibited.

format	I/F width	padding	significance	sequence	throughput (pixel/cycle)	output sequence
		0	x	1	1pixel/1cycle	$B_5B_4B_3B_2B_1B_0xxG_5G_4G_3G_2G_1G_0xx\ R_5R_4R_3R_2R_1R_0xx$
		1	x	0	1pixel/1cycle	$xxR_5R_4R_3R_2R_1R_0xxG_5G_4G_3G_2G_1G_0xxB_5B_4B_3B_2B_1B_0$
		1	x	1	1pixel/1cycle	$xxB_5B_4B_3B_2B_1B_0xxG_5G_4G_3G_2G_1G_0xxR_5R_4R_3R_2R_1R_0$
RGB888	8	x	0	0	1pixel/3cycle	$R_7R_6R_5R_4R_3R_2R_1R_0$ $G_7G_6G_5G_4G_3G_2G_1G_0$ $B_7B_6B_5B_4B_3B_2B_1B_0$
RGB888	8	x	0	1	1pixel/3cycle	$B_7B_6B_5B_4B_3B_2B_1B_0$ $G_7G_6G_5G_4G_3G_2G_1G_0$ $R_7R_6R_5R_4R_3R_2R_1R_0$
		x	1	0	1pixel/3cycle	$B_7B_6B_5B_4B_3B_2B_1B_0$ $G_7G_6G_5G_4G_3G_2G_1G_0$ $R_7R_6R_5R_4R_3R_2R_1R_0$
		x	1	1	1pixel/3cycle	$R_7R_6R_5R_4R_3R_2R_1R_0$ $G_7G_6G_5G_4G_3G_2G_1G_0$ $B_7B_6B_5B_4B_3B_2B_1B_0$
	9	x	0	0	1pixel/3cycle	$R_0R_7R_6R_5R_4R_3R_2R_1R_0$ $G_0G_7G_6G_5G_4G_3G_2G_1G_0$ $B_0B_7B_6B_5B_4B_3B_2B_1B_0$
		x	0	1	1pixel/3cycle	$B_0B_7B_6B_5B_4B_3B_2B_1B_0$ $G_0G_7G_6G_5G_4G_3G_2G_1G_0$ $R_0R_7R_6R_5R_4R_3R_2R_1R_0$
		x	1	0	1pixel/3cycle	$B_0B_7B_6B_5B_4B_3B_2B_1B_0$ $G_0G_7G_6G_5G_4G_3G_2G_1G_0$ $R_0R_7R_6R_5R_4R_3R_2R_1R_0$
		x	1	1	1pixel/3cycle	$R_0R_7R_6R_5R_4R_3R_2R_1R_0$ $G_0G_7G_6G_5G_4G_3G_2G_1G_0$ $B_0B_7B_6B_5B_4B_3B_2B_1B_0$
	16	x	0	0	2pixel/3cycle	$R_7R_6R_5R_4R_3R_2R_1R_0G_7G_6G_5G_4G_3G_2G_1G_0$ $B_7B_6B_5B_4B_3B_2B_1B_0R_7R_6R_5R_4R_3R_2R_1R_0$ $G_7G_6G_5G_4G_3G_2G_1G_0B_7B_6B_5B_4B_3B_2B_1B_0$
		x	0	1	2pixel/3cycle	$B_7B_6B_5B_4B_3B_2B_1B_0G_7G_6G_5G_4G_3G_2G_1G_0$ $R_7R_6R_5R_4R_3R_2R_1R_0B_7B_6B_5B_4B_3B_2B_1B_0$ $G_7G_6G_5G_4G_3G_2G_1G_0R_7R_6R_5R_4R_3R_2R_1R_0$
		x	1	0	2pixel/3cycle	$G_7G_6G_5G_4G_3G_2G_1G_0B_7B_6B_5B_4B_3B_2B_1B_0$ $B_7B_6B_5B_4B_3B_2B_1B_0R_7R_6R_5R_4R_3R_2R_1R_0$ $R_7R_6R_5R_4R_3R_2R_1R_0G_7G_6G_5G_4G_3G_2G_1G_0$
RGB888	16	x	1	1	2pixel/3cycle	$G_7G_6G_5G_4G_3G_2G_1G_0R_7R_6R_5R_4R_3R_2R_1R_0$ $R_7R_6R_5R_4R_3R_2R_1R_0B_7B_6B_5B_4B_3B_2B_1B_0$ $B_7B_6B_5B_4B_3B_2B_1B_0G_7G_5G_5G_4G_3G_2G_1G_0$

© 2015 - 2017 MediaTek Inc.

This document contains information that is proprietary to MediaTek Inc. ("MediaTek") and/or its licensor(s).
Any unauthorized use, reproduction or disclosure of this document in whole or in part is strictly prohibited.

format	I/F width	padding	significance	sequence	throughput (pixel/cycle)	output sequence
	18	x	0	0	2pixel/3cycle	$xxR_7R_6R_5R_4R_3R_2R_1R_0G_7G_6G_5G_4G_3G_2G_1G_0$ $xxB_7B_6B_5B_4B_3B_2B_1B_0R_7R_6R_5R_4R_3R_2R_1R_0$ $xxG_7G_6G_5G_4G_3G_2G_1G_0B_7B_6B_5B_4B_3B_2B_1B_0$
		x	0	1	2pixel/3cycle	$xxB_7B_6B_5B_4B_3B_2B_1B_0G_7G_6G_5G_4G_3G_2G_1G_0$ $xxR_7R_6R_5R_4R_3R_2R_1R_0B_7B_6B_5B_4B_3B_2B_1B_0$ $xxG_7G_6G_5G_4G_3G_2G_1G_0R_7R_6R_5R_4R_3R_2R_1R_0$
		x	1	0	2pixel/3cycle	$xxG_7G_6G_5G_4G_3G_2G_1G_0B_7B_6B_5B_4B_3B_2B_1B_0$ $xxB_7B_6B_5B_4B_3B_2B_1B_0R_7R_6R_5R_4R_3R_2R_1R_0$ $xxR_7R_6R_5R_4R_3R_2R_1R_0G_7G_6G_5G_4G_3G_2G_1G_0$
		x	1	1	2pixel/3cycle	$xxG_7G_6G_5G_4G_3G_2G_1G_0R_7R_6R_5R_4R_3R_2R_1R_0$ $xxR_7R_6R_5R_4R_3R_2R_1R_0B_7B_6B_5B_4B_3B_2B_1B_0$ $xxB_7B_6B_5B_4B_3B_2B_1B_0G_7G_5G_5G_4G_3G_2G_1G_0$
	24	x	x	0	1pixel/1cycle	$R_7R_6R_5R_4R_3R_2R_1R_0G_7G_5G_5G_4G_3G_2G_1G_0B_7B_6B_5B_4B_3B_2B_1B_0$
		x	x	1	1pixel/1cycle	$B_7B_6B_5B_4B_3B_2B_1B_0\ G_7G_5G_5G_4G_3G_2G_1G_0R_7R_6R_5R_4R_3R_2R_1R_0$

Mapping of data order in 2-data-pin protocol with WROICON.FORMAT

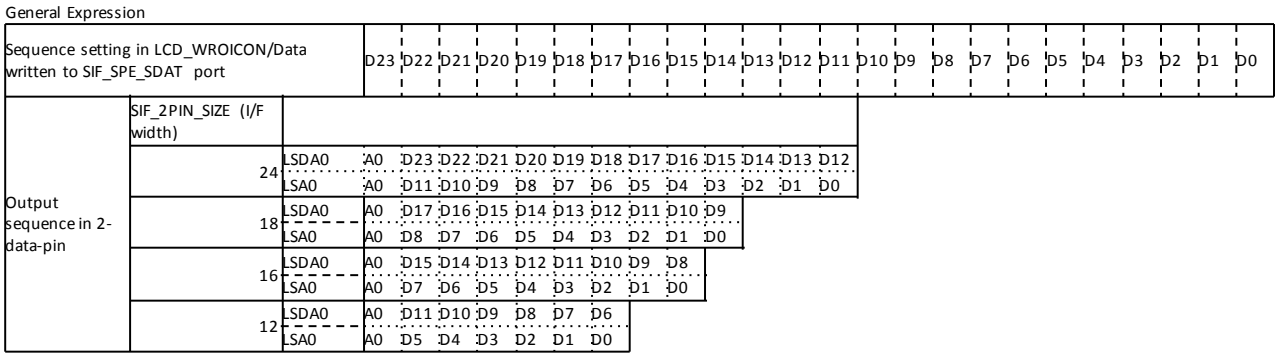

A0450084 LCD_WROIOFS LCD Region of Interest Window Offset Register 00000000

Bit	31	30	29	28	27	26	25	24	23	22	21	20	19	18	17	16
Name						Y_OFFSET										
Type						RW										
Reset						0	0	0	0	0	0	0	0	0	0	0
Bit	15	14	13	12	11	10	9	8	7	6	5	4	3	2	1	0
Name						X_OFFSET										
Type						RW										
Reset						0	0	0	0	0	0	0	0	0	0	0

Bit(s)	Mnemonic	Name	Description
26:16		Y_OFFSET	**ROI Window Column Offset, please see figure 13.**
10:0		X_OFFSET	**ROI Window ROW Offset, please see figure 13.**

© 2015 - 2017 MediaTek Inc.

This document contains information that is proprietary to MediaTek Inc. ("MediaTek") and/or its licensor(s).
Any unauthorized use, reproduction or disclosure of this document in whole or in part is strictly prohibited.

A0450088 LCD_WROICADD LCD Region of Interest Command Address Register 00000000

Bit	31	30	29	28	27	26	25	24	23	22	21	20	19	18	17	16
Name																
Type																
Reset																
Bit	15	14	13	12	11	10	9	8	7	6	5	4	3	2	1	0
Name									ADDR							
Type									RW							
Reset									0	0	0	0				

Bit(s)	Mnemonic	Name	Description
7:4		ADDR	**LCM Address** There are only 5 possible values that may be set for ADDR: 0h: Commands are sent to LCD-B LCM CS0 and the A0 bit will be set to 0. 2h: Commands are sent to LCD-B LCM CS1 and the A0 bit will be set to 0. 4h: Commands are sent to LCD-B LCM CS2 and the A0 bit will be set to 0. 8h: Commands are sent to LCD-C LCM CS0 and the A0 bit will be set to 0. Ah: Commands are sent to LCD-C LCM CS1 and the A0 bit will be set to 0.

A045008C LCD_WROIADDD LCD Region of Interest Data Address Register 00000000

Bit	31	30	29	28	27	26	25	24	23	22	21	20	19	18	17	16
Name																
Type																
Reset																
Bit	15	14	13	12	11	10	9	8	7	6	5	4	3	2	1	0
Name									ADDR							
Type									RW							
Reset									0	0	0	0				

Bit(s)	Mnemonic	Name	Description
7:4		ADDR	**LCM Address** There are only 5 possible values that may be set for ADDR: 1h: Commands are sent to LCD-B LCM CS0 and the A0 bit will be set to 1. 3h: Commands are sent to LCD-B LCM CS1 and the A0 bit will be set to 1. 5h: Commands are sent to LCD-B LCM CS2 and the A0 bit will be set to 1. 9h: Commands are sent to LCD-C LCM CS0 and the A0 bit will be set to 1. Bh: Commands are sent to LCD-C LCM CS1 and the A0 bit will be set to 1.

© 2015 - 2017 MediaTek Inc.

This document contains information that is proprietary to MediaTek Inc. ("MediaTek") and/or its licensor(s).
Any unauthorized use, reproduction or disclosure of this document in whole or in part is strictly prohibited.

A0450090 LCD_WROISIZE LCD Region of Interest Size Register 00000000

Bit	31	30	29	28	27	26	25	24	23	22	21	20	19	18	17	16
Name						ROW										
Type						RW										
Reset						0	0	0	0	0	0	0	0	0	0	0
Bit	15	14	13	12	11	10	9	8	7	6	5	4	3	2	1	0
Name						COL										
Type						RW										
Reset						0	0	0	0	0	0	0	0	0	0	0

Bit(s)	Mnemonic	Name	Description
26:16		ROW	**ROI Window Row Size** Specify the number of rows in the ROI window.
10:0		COL	**ROI Window Column Size** Specify the number of columns in the ROI window.

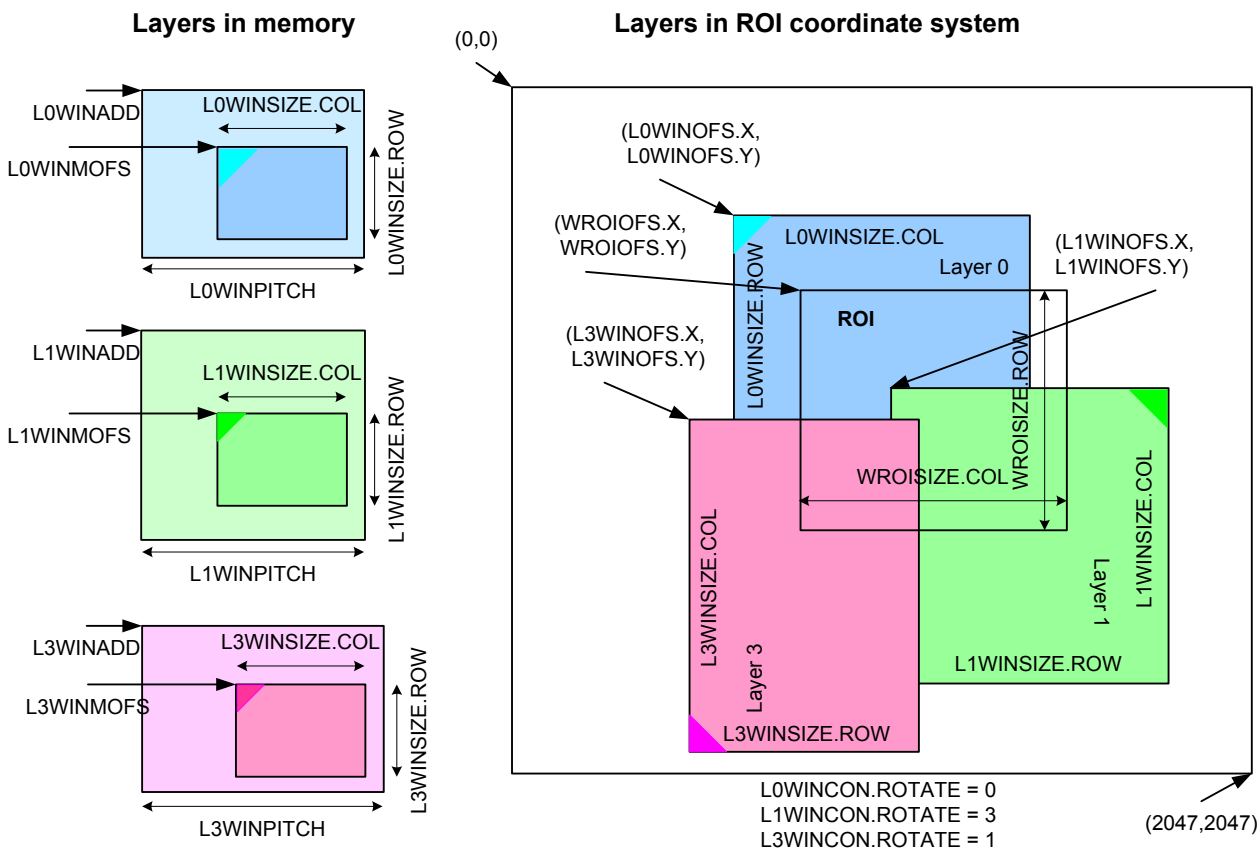

Figure 23-11. Layers and ROI setting

© 2015 - 2017 MediaTek Inc.
This document contains information that is proprietary to MediaTek Inc. ("MediaTek") and/or its licensor(s).
Any unauthorized use, reproduction or disclosure of this document in whole or in part is strictly prohibited.

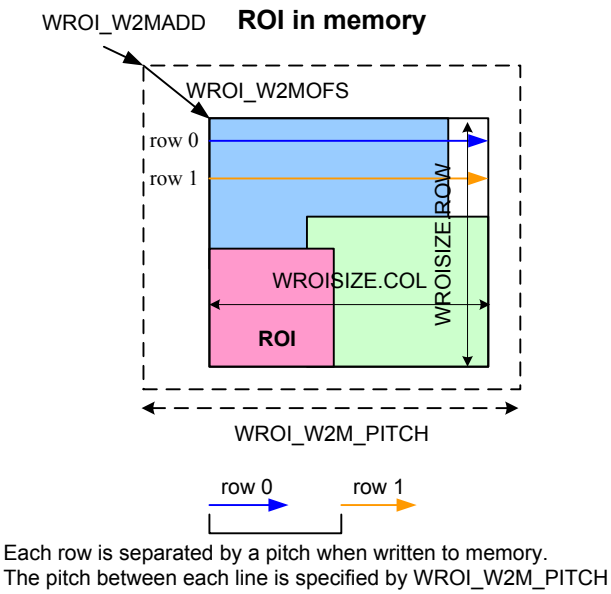

Figure 23-12. ROI write to memory setting

A045009C **LCD_WROI_BGCLR** **LCD Region of Interest Background Color Register** **00000000**

Bit	31	30	29	28	27	26	25	24	23	22	21	20	19	18	17	16
Name	ALPHA								RED							
Type	RW								RW							
Reset	0	0	0	0	0	0	0	0	0	0	0	0	0	0	0	0
Bit	15	14	13	12	11	10	9	8	7	6	5	4	3	2	1	0
Name	GREEN								BLUE							
Type	RW								RW							
Reset	0	0	0	0	0	0	0	0	0	0	0	0	0	0	0	0

Bit(s)	Mnemonic	Name	Description
31:24		ALPHA	**Alpha component of ROI window's background color**
23:16		RED	**Red component of ROI window's background color**
15:8		GREEN	**Green component of ROI window's background color**
7:0		BLUE	**Blue component of ROI window's background color**

A04500B0 **LCD_LoWINCON** **LCD Layer 0 Window Control Register** **00000000**

Bit	31	30	29	28	27	26	25	24	23	22	21	20	19	18	17	16
Name						RGB_SWAP		DST_KEYEN	CLRFMT					DITHER_EN		BYTE_SWAP
Type						RW		RW	RW					RW		RW
Reset						0		0	0	0	0	0		0		0
Bit	15	14	13	12	11	10	9	8	7	6	5	4	3	2	1	0
Name	SRC	SRC_KEYEN	ROTATE					ALPHA_EN	ALPHA							
Type	RW	RW	RW					RW	RW							
Reset	0	0	0	0	0			0	0	0	0	0	0	0	0	0

This document contains information that is proprietary to MediaTek Inc. ("MediaTek") and/or its licensor(s).
Any unauthorized use, reproduction or disclosure of this document in whole or in part is strictly prohibited.

Bit(s)	Mnemonic	Name	Description
26		RGB_SWAP	**Swap RGB order of pixel data read from memory.**
24		DST_KEYEN	**Enable destination color key. If the color format is YUYV422, this function is not supported.**
23:20		CLRFMT	**Color format** 0000: 8bpp indexed color 0001: RGB565 0010: YUYV422 0011: RGB888 0100: ARGB8888 0101: PARGB8888 0110: XRGB 0111: ARGB6666 1000: PARGB6666 1001: 4bpp index color mode 1010: 2bpp index color mode 1011: 1bpp index color mode 1000: PARGB6666 Others: Reserved
18		DITHER_EN	**Enable dithering. Please refer to LCD_DITHERCON**
16		BYTE_SWAP	**Swap high byte and low byte of pixel data read from memory.**
15		SRC	**Disable auot-increment of the source pixel address. It makes the value of each pixel is the same as the first pixel of this frame. It is just for debug.**
14		SRC_KEYEN	**Enable source color key. If the color format is YUYV422, this function is not supported**
13:11		ROTATE	**Rotation configuration** 000: no rotation 001: 90 degree rotation (counterclockwise, single request only) 010: 180 degree rotation (counterclockwise) 011: 270 degree rotation (counterclockwise, single request only) 100: Horizontal flip 101: Horizontal flip then 90 degree rotation (counterclockwise, single request only) 110: Horizontal flip then 180 degree rotation (counterclockwise) 111: Horizontal flip then 270 degree rotation (counterclockwise, single request only)
8		ALPHA_EN	**Enable alpha blending**
7:0		ALPHA	**Constant alpha value**

Note: SRC_KEYEN and DST_KEYEN are exclusive setting. They can't be enabled at the same time.

RGB_SWP Swap RGB order of pixel data read from memory

© 2015 - 2017 MediaTek Inc.

This document contains information that is proprietary to MediaTek Inc. ("MediaTek") and/or its licensor(s).
Any unauthorized use, reproduction or disclosure of this document in whole or in part is strictly prohibited.

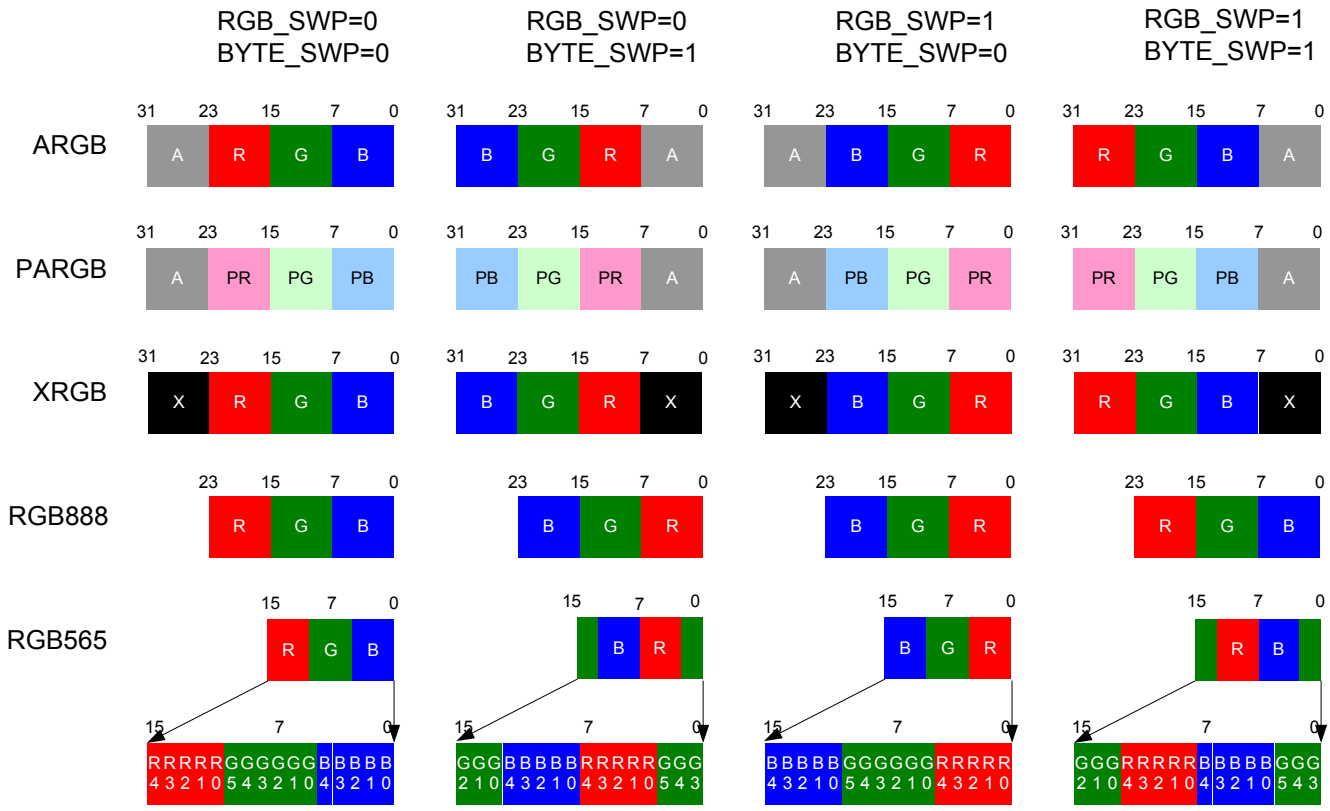

Figure 23-13. Layer source RGB format

The byte order in memory of YUYV422 is described in . Y0 is the Y component of the first pixel, P0. Y1 is the Y component of the second pixel, P1.

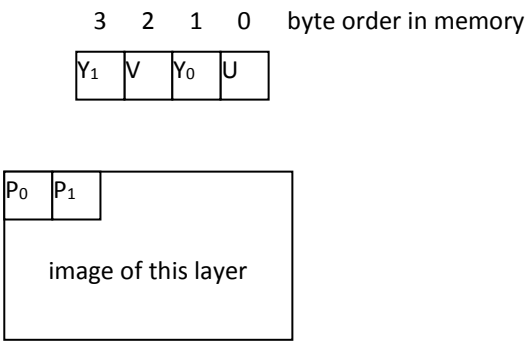

Figure 23-14. YUYV422 byte order in memory

Note: When use YUYV422 mode, the pitch of this layer (LCD_LxWINPITCH) must be even, and the base address (LCD_LxWINADD) of this layer also must be 4-byte aligned. Source color key and destination color key are NOT supported in YUYV422 mode.

© 2015 - 2017 MediaTek Inc.

This document contains information that is proprietary to MediaTek Inc. (“MediaTek”) and/or its licensor(s).
Any unauthorized use, reproduction or disclosure of this document in whole or in part is strictly prohibited.

Note: If color depth is YUYV422, the YUYV422 source will be translated to RGB domain and then overlaid. The YUV to RGB transformation is following the equations.

$$\begin{pmatrix} R \\ G \\ B \end{pmatrix} = \frac{1}{32} \times \begin{bmatrix} 32 & 0 & 45 \\ 32 & -11 & -23 \\ 32 & 57 & 0 \end{bmatrix} \bullet \begin{pmatrix} Y \\ U-128 \\ V-128 \end{pmatrix}$$

The alpha blending formula is selected by source color format automatically.

If source color format is **RGB565**, **RGB888** or **YUYV422** then the alpha blending formula is

```
dst.r = dst.r * (0xff - SCA ) / 0xff + src.r * SCA / 0xff;
dst.g = dst.g * (0xff - SCA ) / 0xff + src.g * SCA / 0xff;
dst.b = dst.b * (0xff - SCA ) / 0xff + src.b * SCA / 0xff;
dst.a = dst.a * (0xff - SCA ) / 0xff +  SCA;
```

If source color format is **PARGB** then the alpha blending formula is

```
if ( SCA != 0xff) {
    dst.r = dst.r * (0xff - src.a * SCA / 0xff) / 0xff + src.r * SCA / 0xff;
    dst.g = dst.g * (0xff - src.a * SCA / 0xff) / 0xff + src.g * SCA / 0xff;
    dst.b = dst.b * (0xff - src.a * SCA / 0xff) / 0xff + src.b * SCA / 0xff;
    dst.a = dst.a * (0xff - src.a * SCA / 0xff) / 0xff + src.a * SCA / 0xff;
} else { // SCA == 0xff
    dst.r = dst.r * (0xff - src.a ) / 0xff + src.r;
    dst.g = dst.g * (0xff - src.a ) / 0xff + src.g;
    dst.b = dst.b * (0xff - src.a ) / 0xff + src.b;
    dst.a = dst.a * (0xff - src.a ) / 0xff + src.a
}
```

If source color format is **ARGB** then the alpha blending formula is

© 2015 - 2017 MediaTek Inc.

This document contains information that is proprietary to MediaTek Inc. (“MediaTek”) and/or its licensor(s).
Any unauthorized use, reproduction or disclosure of this document in whole or in part is strictly prohibited.

```
if ( SCA != 0xff ) {
    dst.r = dst.r * (0xff - src.a * SCA / 0xff) / 0xff + src.r * src.a / 0xff * SCA / 0xff;
    dst.g = dst.g * (0xff - src.a * SCA / 0xff) / 0xff + src.g * src.a / 0xff * SCA / 0xff;
    dst.b = dst.b * (0xff - src.a * SCA / 0xff) / 0xff + src.b * src.a / 0xff * SCA / 0xff;
    dst.a = dst.a * (0xff - src.a * SCA / 0xff) / 0xff + src.a * SCA / 0xff;
} else { // SCA == 0xff
    if SCA = 0xff
    dst.r = dst.r * (0xff - src.a ) / 0xff + src.r * src.a / 0xff;
    dst.g = dst.g * (0xff - src.a ) / 0xff + src.g * src.a / 0xff;
    dst.r = dst.b * (0xff - src.a ) / 0xff + src.b * src.a / 0xff;
    dst.a = dst.a * (0xff - src.a ) / 0xff + src.a;
}
```

src.r, src.g, src.b, and src.a are this layer's pixel value.

dst.r, dst.r, dst.b, and dst.a are the result of alpha blending of all lower layers.

Note: SCA is the source constant alpha specified by LCD_L0WINCON.ALPHA.

Alpha blending hardware approximation:

If source color format is **RGB565**, **RGB888** or **YUYV422** then the hardware implements the following equation to approximate the above equation of 8-bit index color, RGB565, RGB888 or YUYV422. Only list red channel, other channels are the same.

$$\begin{aligned}
&tmp.r = SCA \times (src.r - dst.r) + 255 * dst.r + 128; \\
&dst'.r = (tmp.r + tmp.r >> 8) >> 8; \\
&tmp_d.a = dst.a \times (255 - SCA) + 128 \\
&tmp.a = (tmp_d.a + tmp_d.a >> 8) >> 8 \\
&dst'.a = src.a + tmp.a
\end{aligned}$$

If source color format is **PARGB** then the hardware implements the following equation to approximate the above equation of PARGB. Only list red channel, others are the same.

© 2015 - 2017 MediaTek Inc.

This document contains information that is proprietary to MediaTek Inc. ("MediaTek") and/or its licensor(s).
Any unauthorized use, reproduction or disclosure of this document in whole or in part is strictly prohibited.

```
if ( SCA != 0xff ) {
    tmp_s.a = src.a × SCA + 128
    src'.a = (tmp_s.a + tmp_s.a >> 8) >> 8
    tmp_s.r = src.r × SCA + 128
    src'.r = (tmp_s.r + tmp_s.r >> 8) >> 8
    tmp_d.r = dst.r × (255 - src'.a) + 128
    tmp.r = (tmp_d.r + tmp_d.r >> 8) >> 8
    dst'.r = src'.r + tmp.r
} else { // SCA == 0xff
    tmp_d.r = dst.r × (255 - src.a) + 128
    tmp.r = (tmp_d.r + tmp_d.r >> 8) >> 8
    dst'.r = src.r + tmp.r
}
```

If source color format is **ARGB** then the hardware implements the following equation to approximate the above equation of ARGB. Only list red and alpha channels, others are the same.

```
if ( SCA != 0xff ) {
    tmp_s.a = src.a × SCA + 128;
    src'.a = (tmp_s.a + tmp_s.a >> 8) >> 8;
    tmp_d.a = dst.a × (255 - src'.a) + 128;
    tmp.a = (tmp_d.a + tmp_d.a >> 8) >> 8;
    dst'.a = src'.a + tmp.a;

    tmp.r = src'.a × (src.r - dst.r) + 255 * dst.r + 128;
    dst'.r = (tmp.r + tmp.r >> 8) >> 8;
} else { // SCA == 0xff
    tmp_d.a = dst.a × (255 - src.a) + 128;
    tmp.a = (tmp_d.a + tmp_d.a >> 8) >> 8;
    dst'.a = src.a + tmp.a;

    tmp.r = src.a × (src.r - dst.r) + 255 * dst.r + 128;
    dst'.r = (tmp.r + tmp.r >> 8) >> 8;
}
```

Effect Ordering: Each layer has many effects which can be turned on concurrently. The order the effects are applied are as follows:

1. Memory Offset and Pitch are first used to determine which part of the layer in memory to display.
2. If turned on, a scroll effect is then applied.
3. Rotation is applied to the layer.
4. Finally, swap and dither are applied in this order
5. The layer is alpha blended with previous layers and/or the ROI background.
6. The ROI output is sent to the LCM and/or memory in the color format set by the corresponding register.

© 2015 - 2017 MediaTek Inc.

This document contains information that is proprietary to MediaTek Inc. ("MediaTek") and/or its licensor(s).
Any unauthorized use, reproduction or disclosure of this document in whole or in part is strictly prohibited.

A04500B4 LCD_LoWINKEY LCD Layer 0 Color Key Register 00000000

Bit	31	30	29	28	27	26	25	24	23	22	21	20	19	18	17	16
Name	CLRKEY[31:16]															
Type	RW															
Reset	0	0	0	0	0	0	0	0	0	0	0	0	0	0	0	0
Bit	15	14	13	12	11	10	9	8	7	6	5	4	3	2	1	0
Name	CLRKEY[15:0]															
Type	RW															
Reset	0	0	0	0	0	0	0	0	0	0	0	0	0	0	0	0

Bit(s)	Mnemonic	Name	Description
31:0		CLRKEY	**The source color key or destination key, which depends on LCD_LoWINCON.SRC_KEYEN or LCD_LoWINCON.DST_KEYEN**

A04500B8 LCD_LoWINOFS LCD Layer 0 Window Display Offset Register 00000000

Bit	31	30	29	28	27	26	25	24	23	22	21	20	19	18	17	16
Name						Y_OFFSET										
Type						RW										
Reset						0	0	0	0	0	0	0	0	0	0	0
Bit	15	14	13	12	11	10	9	8	7	6	5	4	3	2	1	0
Name						X_OFFSET										
Type						RW										
Reset						0	0	0	0	0	0	0	0	0	0	0

Bit(s)	Mnemonic	Name	Description
26:16		Y_OFFSET	**Layer 0 Window Column Offset, please see figure 13.**
10:0		X_OFFSET	**Layer 0 Window ROW Offset, please see figure 13.**

A04500BC LCD_LoWINADD LCD Layer 0 Window Display Start Address Register 00000000

Bit	31	30	29	28	27	26	25	24	23	22	21	20	19	18	17	16
Name	ADDR[31:16]															
Type	RW															
Reset	0	0	0	0	0	0	0	0	0	0	0	0	0	0	0	0
Bit	15	14	13	12	11	10	9	8	7	6	5	4	3	2	1	0
Name	ADDR[15:0]															
Type	RW															
Reset	0	0	0	0	0	0	0	0	0	0	0	0	0	0	0	0

Bit(s)	Mnemonic	Name	Description
31:0		ADDR	**Layer 0 source start address (byte address), please see Figure 13. The address must be aligned to layer color depth boundary as Table 6. The LCD has a special function to use the LCM as a layer's frame buffer.**

© 2015 - 2017 MediaTek Inc.

This document contains information that is proprietary to MediaTek Inc. ("MediaTek") and/or its licensor(s).
Any unauthorized use, reproduction or disclosure of this document in whole or in part is strictly prohibited.

Table 23-4. ***Layer address alignment constraint***

LCD_L0WINCON.CLRFMT	Color format	ADDR alignment
0001	RGB565	2 bytes alignment
0100/0101,	ARGB8888/ PRGB8888	4 bytes alignment
0011	RGB888	no alignment constraint
0010	YUYV422	4 bytes alignment
0000	8bpp index color mode	4 bytes alignment
1001	4bpp index color mode	4 bytes alignment
1010	2bpp index color mode	4 bytes alignment
1011	1bpp index color mode	4 bytes alignment

A04500C0 LCD_L0WINSIZE LCD Layer 0 Window Size 00000000

Bit	31	30	29	28	27	26	25	24	23	22	21	20	19	18	17	16
Name						ROW										
Type						RW										
Reset						0	0	0	0	0	0	0	0	0	0	0
Bit	15	14	13	12	11	10	9	8	7	6	5	4	3	2	1	0
Name						COLUMN										
Type						RW										
Reset						0	0	0	0	0	0	0	0	0	0	0

Bit(s)	Mnemonic	Name	Description
26:16		ROW	**Layer 0 Window Row Size in unit of pixel, please see Figure 13.**
10:0		COLUMN	**Layer 0 Window Column Size in unit of pixel, please see Figure 13.**

A04500C8 LCD_L0WINMOFS LCD Layer 0 Memory Offset 00000000

Bit	31	30	29	28	27	26	25	24	23	22	21	20	19	18	17	16
Name						Y_OFFSET										
Type						RW										
Reset						0	0	0	0	0	0	0	0	0	0	0
Bit	15	14	13	12	11	10	9	8	7	6	5	4	3	2	1	0
Name						X_OFFSET										
Type						RW										
Reset						0	0	0	0	0	0	0	0	0	0	0

Bit(s)	Mnemonic	Name	Description
26:16		Y_OFFSET	**Layer 0 Window Column Offset, please see figure 13.**
10:0		X_OFFSET	**Layer 0 Window ROW Offset, please see figure 13.**

© 2015 - 2017 MediaTek Inc.

This document contains information that is proprietary to MediaTek Inc. (“MediaTek”) and/or its licensor(s).
Any unauthorized use, reproduction or disclosure of this document in whole or in part is strictly prohibited.

A04500CC LCD_L0WINPITCH LCD Layer 0 Memory Pitch 0000

Bit	15	14	13	12	11	10	9	8	7	6	5	4	3	2	1	0
Name	PITCH															
Type	RW															
Reset	0	0	0	0	0	0	0	0	0	0	0	0	0	0	0	0

Bit(s)	Mnemonic	Name	Description
15:0		PITCH	**Layer 0 Memory Pitch in unit of byte, please see Figure 13. This should be set to the total width of the image in memory times the number of bytes per pixel. For 4 bpp color depth settings, the pitch must be a multple of 4. For 2 bpp color depth settings, the pitch must be a multiple of 2. For 3 bpp (RGB888) color depth settings, the pitch may be a multiple of any number**

A04500E0 LCD_L1WINCON LCD Layer 1 Window Control Register 00000000

Bit	31	30	29	28	27	26	25	24	23	22	21	20	19	18	17	16
Name						RGB_SWAP		DST_KEYEN	CLRFMT					DITHER_EN		BYTE_SWAP
Type						RW		RW	RW					RW		RW
Reset						0		0	0	0	0	0		0		0
Bit	15	14	13	12	11	10	9	8	7	6	5	4	3	2	1	0
Name	SRC	SRC_KEYEN	ROTATE					ALPHA_EN	ALPHA							
Type	RW	RW	RW					RW	RW							
Reset	0	0	0	0	0			0	0	0	0	0	0	0	0	0

Bit(s)	Mnemonic	Name	Description
26		RGB_SWAP	
24		DST_KEYEN	
23:20		CLRFMT	**Color format** 0000: 8bpp indexed color 0001: RGB565 0010: YUYV422 0011: RGB888 0100: ARGB8888 0101: PARGB8888 0110: XRGB 0111: ARGB6666 1000: PARGB6666 1001: 4bpp index color mode 1010: 2bpp index color mode 1011: 1bpp index color mode 1000: PARGB6666 Others: Reserved
18		DITHER_EN	
16		BYTE_SWAP	
15		SRC	**Disable auot-increment of the source pixel address. It makes the value of each pixel is the same as the first pixel of this frame. It is just for debug.**
14		SRC_KEYEN	
13:11		ROTATE	**Rotation configuration** 000: no rotation

© 2015 - 2017 MediaTek Inc.

This document contains information that is proprietary to MediaTek Inc. ("MediaTek") and/or its licensor(s).
Any unauthorized use, reproduction or disclosure of this document in whole or in part is strictly prohibited.

Bit(s)	Mnemonic	Name	Description
			001: 90 degree rotation (counterclockwise, single request only) 010: 180 degree rotation (counterclockwise) 011: 270 degree rotation (counterclockwise, single request only) 100: Horizontal flip 101: Horizontal flip then 90 degree rotation (counterclockwise, single request only) 110: Horizontal flip then 180 degree rotation (counterclockwise) 111: Horizontal flip then 270 degree rotation (counterclockwise, single request only)
8		ALPHA_EN	**Enable alpha blending**
7:0		ALPHA	**Constant alpha value**

A04500E4 LCD_L1WINKEY LCD Layer 1 Color Key Register 00000000

Bit	31	30	29	28	27	26	25	24	23	22	21	20	19	18	17	16
Name	CLRKEY[31:16]															
Type	RW															
Reset	0	0	0	0	0	0	0	0	0	0	0	0	0	0	0	0
Bit	15	14	13	12	11	10	9	8	7	6	5	4	3	2	1	0
Name	CLRKEY[15:0]															
Type	RW															
Reset	0	0	0	0	0	0	0	0	0	0	0	0	0	0	0	0

Bit(s)	Mnemonic	Name	Description
31:0		CLRKEY	**The source color key or destination key, which depends on LCD_L1WINCON.SRC_KEYEN or LCD_L1WINCON.DST_KEYEN**

A04500E8 LCD_L1WINOFS LCD Layer 1 Window Display Offset Register 00000000

Bit	31	30	29	28	27	26	25	24	23	22	21	20	19	18	17	16
Name						Y_OFFSET										
Type						RW										
Reset						0	0	0	0	0	0	0	0	0	0	0
Bit	15	14	13	12	11	10	9	8	7	6	5	4	3	2	1	0
Name						X_OFFSET										
Type						RW										
Reset						0	0	0	0	0	0	0	0	0	0	0

Bit(s)	Mnemonic	Name	Description
26:16		Y_OFFSET	**Layer 1 Window Column Offset, please see figure 13.**
10:0		X_OFFSET	**Layer 1 Window ROW Offset, please see figure 13.**

A04500EC LCD_L1WINADD LCD Layer 1 Window Display Start Address Register 00000000

Bit	31	30	29	28	27	26	25	24	23	22	21	20	19	18	17	16
Name	ADDR[31:16]															
Type	RW															
Reset	0	0	0	0	0	0	0	0	0	0	0	0	0	0	0	0
Bit	15	14	13	12	11	10	9	8	7	6	5	4	3	2	1	0
Name	ADDR[15:0]															
Type	RW															
Reset	0	0	0	0	0	0	0	0	0	0	0	0	0	0	0	0

© 2015 - 2017 MediaTek Inc.

This document contains information that is proprietary to MediaTek Inc. ("MediaTek") and/or its licensor(s).
Any unauthorized use, reproduction or disclosure of this document in whole or in part is strictly prohibited.

Bit(s)	Mnemonic	Name	Description
31:0		ADDR	**Layer 1 source start address (byte address), please see Figure 13. The address must be aligned to layer color depth boundary as Table 6. The LCD has a special function to use the LCM as a layer's frame buffer.**

A04500F0 LCD_L1WINSIZE LCD Layer 1 Window Size 00000000

Bit	31	30	29	28	27	26	25	24	23	22	21	20	19	18	17	16
Name						ROW										
Type						RW										
Reset						0	0	0	0	0	0	0	0	0	0	0
Bit	15	14	13	12	11	10	9	8	7	6	5	4	3	2	1	0
Name						COLUMN										
Type						RW										
Reset						0	0	0	0	0	0	0	0	0	0	0

Bit(s)	Mnemonic	Name	Description
26:16		ROW	**Layer 1 Window Row Size in unit of pixel, please see Figure 13.**
10:0		COLUMN	**Layer 1 Window Column Size in unit of pixel, please see Figure 13.**

A04500F8 LCD_L1WINMOFS LCD Layer 1 Memory Offset 00000000

Bit	31	30	29	28	27	26	25	24	23	22	21	20	19	18	17	16
Name						Y_OFFSET										
Type						RW										
Reset						0	0	0	0	0	0	0	0	0	0	0
Bit	15	14	13	12	11	10	9	8	7	6	5	4	3	2	1	0
Name						X_OFFSET										
Type						RW										
Reset						0	0	0	0	0	0	0	0	0	0	0

Bit(s)	Mnemonic	Name	Description
26:16		Y_OFFSET	**Layer 1 Window Column Offset, please see figure 13.**
10:0		X_OFFSET	**Layer 1 Window ROW Offset, please see figure 13.**

A04500FC LCD_L1WINPITCH LCD Layer 1 Memory Pitch 0000

Bit	15	14	13	12	11	10	9	8	7	6	5	4	3	2	1	0
Name	PITCH															
Type	RW															
Reset	0	0	0	0	0	0	0	0	0	0	0	0	0	0	0	0

Bit(s)	Mnemonic	Name	Description
15:0		PITCH	**Layer 1 Memory Pitch in unit of byte, please see Figure 13. This should be set to the total width of the image in memory times the number of bytes per pixel. For 4 bpp color depth settings, the pitch must be a multple of 4. For 2 bpp color**

© 2015 - 2017 MediaTek Inc.

This document contains information that is proprietary to MediaTek Inc. ("MediaTek") and/or its licensor(s).
Any unauthorized use, reproduction or disclosure of this document in whole or in part is strictly prohibited.

Bit(s)	Mnemonic	Name	Description
			depth settings, the pitch must be a multiple of 2. For 3 bpp (RGB888) color depth settins, the pitch may be a multiple of any number

A0450110 **LCD_L2WINCON** **LCD Layer 2 Window Control Register** **00000000**

Bit	31	30	29	28	27	26	25	24	23	22	21	20	19	18	17	16
Name						RGB_SWAP		DST_KEYEN	CLRFMT					DITHER_EN		BYTE_SWAP
Type						RW		RW	RW					RW		RW
Reset						0		0	0	0	0	0		0		0
Bit	15	14	13	12	11	10	9	8	7	6	5	4	3	2	1	0
Name	SRC	SRC_KEYEN	ROTATE					ALPHA_EN	ALPHA							
Type	RW	RW	RW					RW	RW							
Reset	0	0	0	0	0			0	0	0	0	0	0	0	0	0

Bit(s)	Mnemonic	Name	Description
26		RGB_SWAP	
24		DST_KEYEN	
23:20		CLRFMT	**Color format** 0000: 8bpp indexed color 0001: RGB565 0010: YUYV422 0011: RGB888 0100: ARGB8888 0101: PARGB8888 0110: XRGB 0111: ARGB6666 1000: PARGB6666 1001: 4bpp index color mode 1010: 2bpp index color mode 1011: 1bpp index color mode 1000: PARGB6666 Others: Reserved
18		DITHER_EN	
16		BYTE_SWAP	
15		SRC	**Disable auot-increment of the source pixel address. It makes the value of each pixel is the same as the first pixel of this frame. It is just for debug.**
14		SRC_KEYEN	
13:11		ROTATE	**Rotation configuration** 000: no rotation 001: 90 degree rotation (counterclockwise, single request only) 010: 180 degree rotation (counterclockwise) 011: 270 degree rotation (counterclockwise, single request only) 100: Horizontal flip 101: Horizontal flip then 90 degree rotation (counterclockwise, single reqest only) 110: Horizontal flip then 180 degree rotation (counterclockwise) 111: Horizontal flip then 270 degree rotation (counterclockwise, single request only)
8		ALPHA_EN	**Enable alpha blending**
7:0		ALPHA	**Constant alpha value**

© 2015 - 2017 MediaTek Inc.

This document contains information that is proprietary to MediaTek Inc. (“MediaTek”) and/or its licensor(s).
Any unauthorized use, reproduction or disclosure of this document in whole or in part is strictly prohibited.

A0450114 LCD_L2WINKEY LCD Layer 2 Color Key Register 00000000

Bit	31	30	29	28	27	26	25	24	23	22	21	20	19	18	17	16
Name	CLRKEY[31:16]															
Type	RW															
Reset	0	0	0	0	0	0	0	0	0	0	0	0	0	0	0	0
Bit	15	14	13	12	11	10	9	8	7	6	5	4	3	2	1	0
Name	CLRKEY[15:0]															
Type	RW															
Reset	0	0	0	0	0	0	0	0	0	0	0	0	0	0	0	0

Bit(s)	Mnemonic	Name	Description
31:0		CLRKEY	**The source color key or destination key, which depends on LCD_L2WINCON.SRC_KEYEN or LCD_L2WINCON.DST_KEYEN**

A0450118 LCD_L2WINOFS LCD Layer 2 Window Display Offset Register 00000000

Bit	31	30	29	28	27	26	25	24	23	22	21	20	19	18	17	16
Name						Y_OFFSET										
Type						RW										
Reset						0	0	0	0	0	0	0	0	0	0	0
Bit	15	14	13	12	11	10	9	8	7	6	5	4	3	2	1	0
Name						X_OFFSET										
Type						RW										
Reset						0	0	0	0	0	0	0	0	0	0	0

Bit(s)	Mnemonic	Name	Description
26:16		Y_OFFSET	**Layer 2 Window Column Offset, please see figure 13.**
10:0		X_OFFSET	**Layer 2 Window ROW Offset, please see figure 13.**

A045011C LCD_L2WINADD LCD Layer 2 Window Display Start Address Register 00000000

Bit	31	30	29	28	27	26	25	24	23	22	21	20	19	18	17	16
Name	ADDR[31:16]															
Type	RW															
Reset	0	0	0	0	0	0	0	0	0	0	0	0	0	0	0	0
Bit	15	14	13	12	11	10	9	8	7	6	5	4	3	2	1	0
Name	ADDR[15:0]															
Type	RW															
Reset	0	0	0	0	0	0	0	0	0	0	0	0	0	0	0	0

Bit(s)	Mnemonic	Name	Description
31:0		ADDR	**Layer 2 source start address (byte address), please see Figure 13. The address must be aligned to layer color depth boundary as Table 6. The LCD has a special function to use the LCM as a layer's frame buffer.**

© 2015 - 2017 MediaTek Inc.

This document contains information that is proprietary to MediaTek Inc. ("MediaTek") and/or its licensor(s).
Any unauthorized use, reproduction or disclosure of this document in whole or in part is strictly prohibited.

A0450120 LCD_L2WINSIZE LCD Layer 2 Window Size 00000000

Bit	31	30	29	28	27	26	25	24	23	22	21	20	19	18	17	16
Name						ROW										
Type						RW										
Reset						0	0	0	0	0	0	0	0	0	0	0
Bit	15	14	13	12	11	10	9	8	7	6	5	4	3	2	1	0
Name						COLUMN										
Type						RW										
Reset						0	0	0	0	0	0	0	0	0	0	0

Bit(s)	Mnemonic	Name	Description
26:16		ROW	**Layer 2 Window Row Size in unit of pixel, please see Figure 13.**
10:0		COLUMN	**Layer 2 Window Column Size in unit of pixel, please see Figure 13.**

A0450128 LCD_L2WINMOFS LCD Layer 2 Memory Offset 00000000

Bit	31	30	29	28	27	26	25	24	23	22	21	20	19	18	17	16
Name						Y_OFFSET										
Type						RW										
Reset						0	0	0	0	0	0	0	0	0	0	0
Bit	15	14	13	12	11	10	9	8	7	6	5	4	3	2	1	0
Name						X_OFFSET										
Type						RW										
Reset						0	0	0	0	0	0	0	0	0	0	0

Bit(s)	Mnemonic	Name	Description
26:16		Y_OFFSET	**Layer 2 Window Column Offset, please see figure 13.**
10:0		X_OFFSET	**Layer 2 Window ROW Offset, please see figure 13.**

A045012C LCD_L2WINPITCH LCD Layer 2 Memory Pitch 0000

Bit	15	14	13	12	11	10	9	8	7	6	5	4	3	2	1	0
Name	PITCH															
Type	RW															
Reset	0	0	0	0	0	0	0	0	0	0	0	0	0	0	0	0

Bit(s)	Mnemonic	Name	Description
15:0		PITCH	**Layer 2 Memory Pitch in unit of byte, please see Figure 13. This should be set to the total width of the image in memory times the number of bytes per pixel. For 4 bpp color depth settings, the pitch must be a multple of 4. For 2 bpp color depth settings, the pitch must be a multiple of 2. For 3 bpp (RGB888) color depth settins, the pitch may be a multiple of any number**

© 2015 - 2017 MediaTek Inc.

This document contains information that is proprietary to MediaTek Inc. ("MediaTek") and/or its licensor(s).
Any unauthorized use, reproduction or disclosure of this document in whole or in part is strictly prohibited.

A0450140 **LCD_L3WINCON** **LCD Layer 3 Window Control Register** **00000000**

Bit	31	30	29	28	27	26	25	24	23	22	21	20	19	18	17	16
Name						RGB_SWAP		DST_KEYEN	CLRFMT					DITHER_EN		BYTE_SWAP
Type						RW		RW	RW					RW		RW
Reset						0		0	0	0	0	0		0		0
Bit	15	14	13	12	11	10	9	8	7	6	5	4	3	2	1	0
Name	SRC	SRC_KEYEN	ROTATE					ALPHA_EN	ALPHA							
Type	RW	RW	RW					RW	RW							
Reset	0	0	0	0	0			0	0	0	0	0	0	0	0	0

Bit(s)	Mnemonic	Name	Description
26		RGB_SWAP	
24		DST_KEYEN	
23:20		CLRFMT	**Color format** 0000: 8bpp indexed color 0001: RGB565 0010: YUYV422 0011: RGB888 0100: ARGB8888 0101: PARGB8888 0110: XRGB 0111: ARGB6666 1000: PARGB6666 1001: 4bpp index color mode 1010: 2bpp index color mode 1011: 1bpp index color mode 1000: PARGB6666 Others: Reserved
18		DITHER_EN	
16		BYTE_SWAP	
15		SRC	**Disable auot-increment of the source pixel address. It makes the value of each pixel is the same as the first pixel of this frame. It is just for debug.**
14		SRC_KEYEN	
13:11		ROTATE	**Rotation configuration** 000: no rotation 001: 90 degree rotation (counterclockwise, single request only) 010: 180 degree rotation (counterclockwise) 011: 270 degree rotation (counterclockwise, single request only) 100: Horizontal flip 101: Horizontal flip then 90 degree rotation (counterclockwise, single reqest only) 110: Horizontal flip then 180 degree rotation (counterclockwise) 111: Horizontal flip then 270 degree rotation (counterclockwise, single request only)
8		ALPHA_EN	**Enable alpha blending**
7:0		ALPHA	**Constant alpha value**

A0450144 **LCD_L3WINKEY** **LCD Layer 3 Color Key Register** **00000000**

Bit	31	30	29	28	27	26	25	24	23	22	21	20	19	18	17	16
Name	CLRKEY[31:16]															

© 2015 - 2017 MediaTek Inc.
This document contains information that is proprietary to MediaTek Inc. ("MediaTek") and/or its licensor(s).
Any unauthorized use, reproduction or disclosure of this document in whole or in part is strictly prohibited.

Type	RW															
Reset	0	0	0	0	0	0	0	0	0	0	0	0	0	0	0	0
Bit	15	14	13	12	11	10	9	8	7	6	5	4	3	2	1	0
Name	**CLRKEY[15:0]**															
Type	RW															
Reset	0	0	0	0	0	0	0	0	0	0	0	0	0	0	0	0

Bit(s)	Mnemonic	Name	Description
31:0		CLRKEY	**The source color key or destination key, which depends on LCD_L3WINCON.SRC_KEYEN or LCD_L3WINCON.DST_KEYEN**

A0450148 LCD_L3WINOFS LCD Layer 3 Window Display Offset Register 00000000

Bit	31	30	29	28	27	26	25	24	23	22	21	20	19	18	17	16
Name						**Y_OFFSET**										
Type						RW										
Reset						0	0	0	0	0	0	0	0	0	0	0
Bit	15	14	13	12	11	10	9	8	7	6	5	4	3	2	1	0
Name						**X_OFFSET**										
Type						RW										
Reset						0	0	0	0	0	0	0	0	0	0	0

Bit(s)	Mnemonic	Name	Description
26:16		Y_OFFSET	**Layer 3 Window Column Offset, please see figure 13.**
10:0		X_OFFSET	**Layer 3 Window ROW Offset, please see figure 13.**

A045014C LCD_L3WINADD LCD Layer 3 Window Display Start Address Register 00000000

Bit	31	30	29	28	27	26	25	24	23	22	21	20	19	18	17	16
Name	**ADDR[31:16]**															
Type	RW															
Reset	0	0	0	0	0	0	0	0	0	0	0	0	0	0	0	0
Bit	15	14	13	12	11	10	9	8	7	6	5	4	3	2	1	0
Name	**ADDR[15:0]**															
Type	RW															
Reset	0	0	0	0	0	0	0	0	0	0	0	0	0	0	0	0

Bit(s)	Mnemonic	Name	Description
31:0		ADDR	**Layer 3 source start address (byte address), please see Figure 13. The address must be aligned to layer color depth boundary as Table 6. The LCD has a special function to use the LCM as a layer's frame buffer.**

A0450150 LCD_L3WINSIZE LCD Layer 3 Window Size 00000000

Bit	31	30	29	28	27	26	25	24	23	22	21	20	19	18	17	16
Name						**ROW**										
Type						RW										
Reset						0	0	0	0	0	0	0	0	0	0	0
Bit	15	14	13	12	11	10	9	8	7	6	5	4	3	2	1	0
Name						**COLUMN**										
Type						RW										
Reset						0	0	0	0	0	0	0	0	0	0	0

© 2015 - 2017 MediaTek Inc.

This document contains information that is proprietary to MediaTek Inc. ("MediaTek") and/or its licensor(s).
Any unauthorized use, reproduction or disclosure of this document in whole or in part is strictly prohibited.

Bit(s)	Mnemonic	Name	Description
26:16		ROW	**Layer 3 Window Row Size in unit of pixel, please see Figure 13.**
10:0		COLUMN	**Layer 3 Window Column Size in unit of pixel, please see Figure 13.**

A0450158 **LCD_L3WINMOFS** **LCD Layer 3 Memory Offset** **00000000**

Bit	31	30	29	28	27	26	25	24	23	22	21	20	19	18	17	16
Name						Y_OFFSET										
Type						RW										
Reset						0	0	0	0	0	0	0	0	0	0	0
Bit	15	14	13	12	11	10	9	8	7	6	5	4	3	2	1	0
Name						X_OFFSET										
Type						RW										
Reset						0	0	0	0	0	0	0	0	0	0	0

Bit(s)	Mnemonic	Name	Description
26:16		Y_OFFSET	**Layer 3 Window Column Offset, please see figure 13.**
10:0		X_OFFSET	**Layer 3 Window ROW Offset, please see figure 13.**

A045015C **LCD_L3WINPITCH** **LCD Layer 3 Memory Pitch** **0000**

Bit	15	14	13	12	11	10	9	8	7	6	5	4	3	2	1	0
Name	PITCH															
Type	RW															
Reset	0	0	0	0	0	0	0	0	0	0	0	0	0	0	0	0

Bit(s)	Mnemonic	Name	Description
15:0		PITCH	**Layer 3 Memory Pitch in unit of byte, please see Figure 13. This should be set to the total width of the image in memory times the number of bytes per pixel. For 4 bpp color depth settings, the pitch must be a multple of 4. For 2 bpp color depth settings, the pitch must be a multiple of 2. For 3 bpp (RGB888) color depth settins, the pitch may be a multiple of any number**

A0450270 **LCD_SIF_STR_BYTE_CON** **LCD SIF Start Byte Configuration Register** **00000000**

Bit	31	30	29	28	27	26	25	24	23	22	21	20	19	18	17	16
Name																
Type																
Reset																
Bit	15	14	13	12	11	10	9	8	7	6	5	4	3	2	1	0
Name	SIF1_STR_BYTE_MOD	SIF1_STR_BYTE_SWITCH				SIF1_STR_DATA_SIZE			SIF0_STR_BYTE_MOD	SIF0_STR_BYTE_SWITCH				SIF0_STR_DATA_SIZE		
Type	RW	RW				RW			RW	RW				RW		
Reset	0	0				0	0	0	0	0				0	0	0

© 2015 - 2017 MediaTek Inc.

This document contains information that is proprietary to MediaTek Inc. ("MediaTek") and/or its licensor(s).
Any unauthorized use, reproduction or disclosure of this document in whole or in part is strictly prohibited.

Bit(s)	Mnemonic	Name	Description
15		SIF1_STR_BYTE_MOD	**Start Byte mode of serial interface 1.** 0: Start Byte mode off 1: Start Byte mode on
14		SIF1_STR_BYTE_SWITCH	**Start Byte mod2 switch of serial interface 1.** 0: Start Byte mod2 switch off 1: Start Byte mod2 switch on
10:8		SIF1_STR_DATA_SIZE	**Interface size of the data part of serial interface 1 under Start Byte mode.** 000: 8 bits 001: 9 bits 010: 16 bits 011: 18 bits 100: 24 bits 101: 32 bits
7		SIF0_STR_BYTE_MOD	**Start Byte mode of serial interface 0.** 0: Start Byte mode off 1: Start Byte mode on
6		SIF0_STR_BYTE_SWITCH	**Start Byte mod2 switch of serial interface 0.** 0: Start Byte mod2 switch off 1: Start Byte mod2 switch on
2:0		SIF0_STR_DATA_SIZE	**Interface size of the data part of serial interface 0 under Start Byte mode.** 000: 8 bits 001: 9 bits 010: 16 bits 011: 18 bits 100: 24 bits 101: 32 bits

A0450278 LCD_SIF_WR_STR_BYTE LCD SIF Write Start Byte Value 00000000

Bit	31	30	29	28	27	26	25	24	23	22	21	20	19	18	17	16
Name	SIF1_WR_STR_BYTE2								SIF0_WR_STR_BYTE2							
Type	RW								RW							
Reset	0	0	0	0	0	0	0	0	0	0	0	0	0	0	0	0
Bit	15	14	13	12	11	10	9	8	7	6	5	4	3	2	1	0
Name	SIF1_WR_STR_BYTE								SIF0_WR_STR_BYTE							
Type	RW								RW							
Reset	0	0	0	0	0	0	0	0	0	0	0	0	0	0	0	0

Bit(s)	Mnemonic	Name	Description
31:24		SIF1_WR_STR_BYTE2	**Value of the write start byte2 of serial interface 1.**
23:16		SIF0_WR_STR_BYTE2	**Value of the write start byte2 of serial interface 0.**
15:8		SIF1_WR_STR_BYTE	**Value of the write start byte of serial interface 1.**
7:0		SIF0_WR_STR_BYTE	**Value of the write start byte of serial interface 0.**

© 2015 - 2017 MediaTek Inc.

This document contains information that is proprietary to MediaTek Inc. ("MediaTek") and/or its licensor(s).
Any unauthorized use, reproduction or disclosure of this document in whole or in part is strictly prohibited.

A045027C LCD_SIF_RD_STR_BYTE LCD SIF Read Start Byte Value 00000000

Bit	31	30	29	28	27	26	25	24	23	22	21	20	19	18	17	16
Name																
Type																
Reset																
Bit	15	14	13	12	11	10	9	8	7	6	5	4	3	2	1	0
Name	SIF1_RD_STR_BYTE								SIF0_RD_STR_BYTE							
Type	RW								RW							
Reset	0	0	0	0	0	0	0	0	0	0	0	0	0	0	0	0

Bit(s)	Mnemonic	Name	Description
15:8		SIF1_RD_STR_BYTE	**Value of the read start byte of serial interface 1.**
7:0		SIF0_RD_STR_BYTE	**Value of the read start byte of serial interface 0.**

A0450300 LCD_SIF_PAD_INPUT_SELECT LCD serial pad selection 00000000

Bit	31	30	29	28	27	26	25	24	23	22	21	20	19	18	17	16
Name														LSDA_SEL		
Type														RW		
Reset														0	0	0
Bit	15	14	13	12	11	10	9	8	7	6	5	4	3	2	1	0
Name														LSDI_SEL		
Type														RW		
Reset														0	0	0

Bit(s)	Mnemonic	Name	Description
18:16		LSDA_SEL	**input selection of lsda from slcd_pad_macro** 000: from pad_macro input 0 001: from pad_macro input 1
2:0		LSDI_SEL	**Input selection of lsdi from slcd_pad_macro** 000: from pad_macro input 0 001: from pad_macro input 1

A0450400 LCD_TABLE_INDEX_0_1 LCD INDEX Mode 0_1 00000000

Bit	31	30	29	28	27	26	25	24	23	22	21	20	19	18	17	16
Name	INDEX1_RGB565															
Type	RW															
Reset	0	0	0	0	0	0	0	0	0	0	0	0	0	0	0	0
Bit	15	14	13	12	11	10	9	8	7	6	5	4	3	2	1	0
Name	INDEX0_RGB565															
Type	RW															
Reset	0	0	0	0	0	0	0	0	0	0	0	0	0	0	0	0

Bit(s)	Mnemonic	Name	Description
31:16		INDEX1_RGB565	**index 1 RGB565**
15:0		INDEX0_RGB565	**index 0 RGB565**

© 2015 - 2017 MediaTek Inc.

This document contains information that is proprietary to MediaTek Inc. ("MediaTek") and/or its licensor(s).
Any unauthorized use, reproduction or disclosure of this document in whole or in part is strictly prohibited.

A0450404 LCD_TABLE_INDEX_2_3 LCD INDEX Mode 2_3 00000000

Bit	31	30	29	28	27	26	25	24	23	22	21	20	19	18	17	16
Name	INDEX3_RGB565															
Type	RW															
Reset	0	0	0	0	0	0	0	0	0	0	0	0	0	0	0	0
Bit	15	14	13	12	11	10	9	8	7	6	5	4	3	2	1	0
Name	INDEX2_RGB565															
Type	RW															
Reset	0	0	0	0	0	0	0	0	0	0	0	0	0	0	0	0

Bit(s)	Mnemonic	Name	Description
31:16		INDEX3_RGB565	**index 3 RGB565**
15:0		INDEX2_RGB565	**index 2 RGB565**

A04504048 LCD_TABLE_INDEX_4_5 LCD INDEX Mode 4_5 00000000

Bit	31	30	29	28	27	26	25	24	23	22	21	20	19	18	17	16
Name	INDEX5_RGB565															
Type	RW															
Reset	0	0	0	0	0	0	0	0	0	0	0	0	0	0	0	0
Bit	15	14	13	12	11	10	9	8	7	6	5	4	3	2	1	0
Name	INDEX4_RGB565															
Type	RW															
Reset	0	0	0	0	0	0	0	0	0	0	0	0	0	0	0	0

Bit(s)	Mnemonic	Name	Description
31:16		INDEX5_RGB565	**index 5 RGB565**
15:0		INDEX4_RGB565	**index 4 RGB565**

A045040C LCD_TABLE_INDEX_6_7 LCD INDEX Mode 6_7 00000000

Bit	31	30	29	28	27	26	25	24	23	22	21	20	19	18	17	16
Name	INDEX7_RGB565															
Type	RW															
Reset	0	0	0	0	0	0	0	0	0	0	0	0	0	0	0	0
Bit	15	14	13	12	11	10	9	8	7	6	5	4	3	2	1	0
Name	INDEX6_RGB565															
Type	RW															
Reset	0	0	0	0	0	0	0	0	0	0	0	0	0	0	0	0

Bit(s)	Mnemonic	Name	Description
31:16		INDEX7_RGB565	**index 7 RGB565**
15:0		INDEX6_RGB565	**index 6 RGB565**

© 2015 - 2017 MediaTek Inc.

This document contains information that is proprietary to MediaTek Inc. ("MediaTek") and/or its licensor(s).
Any unauthorized use, reproduction or disclosure of this document in whole or in part is strictly prohibited.

A0450410 LCD_TABLE_INDEX_8_9 LCD INDEX Mode 8_9 00000000

Bit	31	30	29	28	27	26	25	24	23	22	21	20	19	18	17	16
Name	INDEX9_RGB565															
Type	RW															
Reset	0	0	0	0	0	0	0	0	0	0	0	0	0	0	0	0
Bit	15	14	13	12	11	10	9	8	7	6	5	4	3	2	1	0
Name	INDEX8_RGB565															
Type	RW															
Reset	0	0	0	0	0	0	0	0	0	0	0	0	0	0	0	0

Bit(s)	Mnemonic	Name	Description
31:16		INDEX9_RGB565	**index 9 RGB565**
15:0		INDEX8_RGB565	**index 8 RGB565**

A0450414 LCD_TABLE_INDEX_a_b LCD INDEX Mode a_b 00000000

Bit	31	30	29	28	27	26	25	24	23	22	21	20	19	18	17	16
Name	INDEXb_RGB565															
Type	RW															
Reset	0	0	0	0	0	0	0	0	0	0	0	0	0	0	0	0
Bit	15	14	13	12	11	10	9	8	7	6	5	4	3	2	1	0
Name	INDEXa_RGB565															
Type	RW															
Reset	0	0	0	0	0	0	0	0	0	0	0	0	0	0	0	0

Bit(s)	Mnemonic	Name	Description
31:16		INDEXb_RGB565	**index 11 RGB565**
15:0		INDEXa_RGB565	**index 10 RGB565**

A0450418 LCD_TABLE_INDEX_c_d LCD INDEX Mode c_d 00000000

Bit	31	30	29	28	27	26	25	24	23	22	21	20	19	18	17	16
Name	INDEXd_RGB565															
Type	RW															
Reset	0	0	0	0	0	0	0	0	0	0	0	0	0	0	0	0
Bit	15	14	13	12	11	10	9	8	7	6	5	4	3	2	1	0
Name	INDEXc_RGB565															
Type	RW															
Reset	0	0	0	0	0	0	0	0	0	0	0	0	0	0	0	0

Bit(s)	Mnemonic	Name	Description
31:16		INDEXd_RGB565	**index 13 RGB565**
15:0		INDEXc_RGB565	**index 12 RGB565**

A045041C LCD_TABLE_INDEX_e_f LCD INDEX Mode e_f 00000000

Bit	31	30	29	28	27	26	25	24	23	22	21	20	19	18	17	16
Name	INDEXf_RGB565															
Type	RW															
Reset	0	0	0	0	0	0	0	0	0	0	0	0	0	0	0	0

© 2015 - 2017 MediaTek Inc.

This document contains information that is proprietary to MediaTek Inc. ("MediaTek") and/or its licensor(s).
Any unauthorized use, reproduction or disclosure of this document in whole or in part is strictly prohibited.

Bit	15	14	13	12	11	10	9	8	7	6	5	4	3	2	1	0
Name	INDEXe_RGB565															
Type	RW															
Reset	0	0	0	0	0	0	0	0	0	0	0	0	0	0	0	0

Bit(s)	Mnemonic	Name	Description
31:16		INDEXf_RGB565	**index 15 RGB565**
15:0		INDEXe_RGB565	**index 14 RGB565**

A0450F80 LCD_SCMD0 LCD Serial Interface Command Port0 00000000

Bit	31	30	29	28	27	26	25	24	23	22	21	20	19	18	17	16
Name	DATA[31:16]															
Type	Other															
Reset	0	0	0	0	0	0	0	0	0	0	0	0	0	0	0	0
Bit	15	14	13	12	11	10	9	8	7	6	5	4	3	2	1	0
Name	DATA[15:0]															
Type	Other															
Reset	0	0	0	0	0	0	0	0	0	0	0	0	0	0	0	0

Bit(s)	Mnemonic	Name	Description
31:0		DATA	**Command Port** Write or read this register to directly access the LCD-C LCM0. LSA0=0 in 4-wire mode or A0 bit=0 in 3-wire mode

A0450F90 LCD_SDAT0 LCD Serial Interface Data Port0 00000000

Bit	31	30	29	28	27	26	25	24	23	22	21	20	19	18	17	16
Name	DATA[31:16]															
Type	Other															
Reset	0	0	0	0	0	0	0	0	0	0	0	0	0	0	0	0
Bit	15	14	13	12	11	10	9	8	7	6	5	4	3	2	1	0
Name	DATA[15:0]															
Type	Other															
Reset	0	0	0	0	0	0	0	0	0	0	0	0	0	0	0	0

Bit(s)	Mnemonic	Name	Description
31:0		DATA	**Data Port** Write or read this register to directly access the LCD-C LCM0. The A0 bit will be 1.

A0450FA0 LCD_SCMD1 LCD Serial Interface Command Port1 00000000

Bit	31	30	29	28	27	26	25	24	23	22	21	20	19	18	17	16
Name	DATA[31:16]															
Type	Other															
Reset	0	0	0	0	0	0	0	0	0	0	0	0	0	0	0	0
Bit	15	14	13	12	11	10	9	8	7	6	5	4	3	2	1	0
Name	DATA[15:0]															
Type	Other															
Reset	0	0	0	0	0	0	0	0	0	0	0	0	0	0	0	0

Bit(s)	Mnemonic	Name	Description
31:0		DATA	**Command Port** Write or read this register to directly access the LCD-C LCM1. The A0 bit will be 0.

© 2015 - 2017 MediaTek Inc.

This document contains information that is proprietary to MediaTek Inc. ("MediaTek") and/or its licensor(s).
Any unauthorized use, reproduction or disclosure of this document in whole or in part is strictly prohibited.

A0450FB0 LCD_SDAT1 LCD Serial Interface Data Port1 00000000

Bit	31	30	29	28	27	26	25	24	23	22	21	20	19	18	17	16
Name	DATA[31:16]															
Type	Other															
Reset	0	0	0	0	0	0	0	0	0	0	0	0	0	0	0	0
Bit	15	14	13	12	11	10	9	8	7	6	5	4	3	2	1	0
Name	DATA[15:0]															
Type	Other															
Reset	0	0	0	0	0	0	0	0	0	0	0	0	0	0	0	0

Bit(s)	Mnemonic	Name	Description
31:0		DATA	**Data Port** Write or read this register to directly access the LCD-C LCM1. The A0 bit will be 1.

© 2015 - 2017 MediaTek Inc.

This document contains information that is proprietary to MediaTek Inc. ("MediaTek") and/or its licensor(s).
Any unauthorized use, reproduction or disclosure of this document in whole or in part is strictly prohibited.

24. Display Serial Interface (DSI)

24.1. General Description

The display serial interface (DSI) is based on MIPI Alliance Specification, supporting high-speed serial data transfer between host processor and peripheral devices such as display modules. DSI supports command mode data transfer defined in MIPI spec, and it also provides bidirectional transmission with low-power mode to receive messages from the peripheral.

24.2. Features

The DSI engine has the following features for display serial interface:

- One clock lane and one data lane
- Bidirectional data transmission in low-power mode in data lane 0
- Uni-directional data transmission in high-speed mode in data lane 0
- DCS command transmission
- Pixel format of RGB565/loosely RGB666/RGB888
- Supports non-continuous high-speed transmission in data lane
- Supports peripheral TE and external TE signal detection
- Supports ultra-low power mode control

24.2.1. Pixel Format

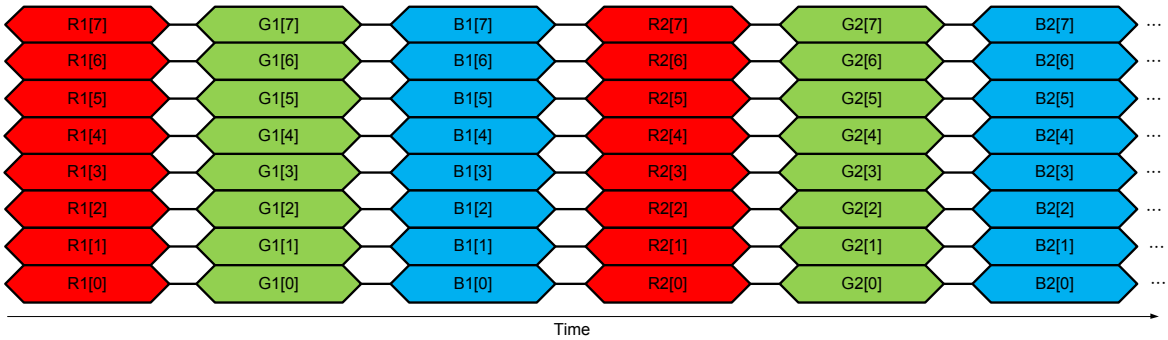

Figure 24-1. Pixel Format of RGB888

© 2015 - 2017 MediaTek Inc.

This document contains information that is proprietary to MediaTek Inc. ("MediaTek") and/or its licensor(s).
Any unauthorized use, reproduction or disclosure of this document in whole or in part is strictly prohibited.

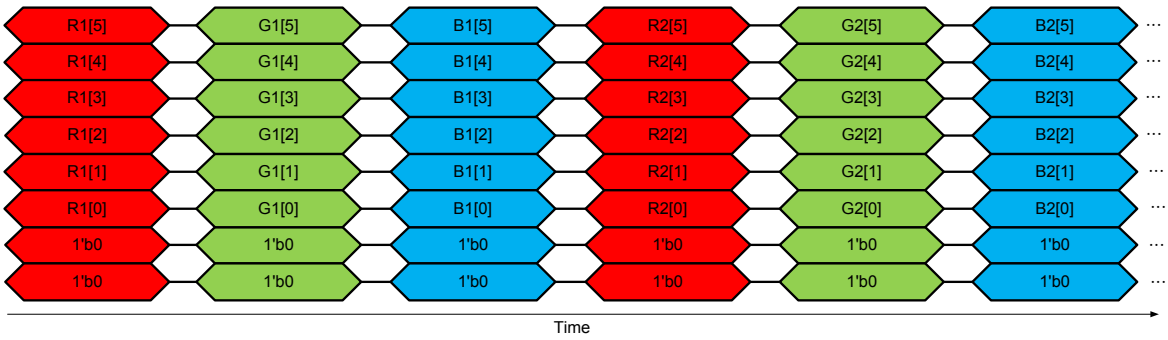

Figure 24-2. Pixel Format of Loosely RGB666

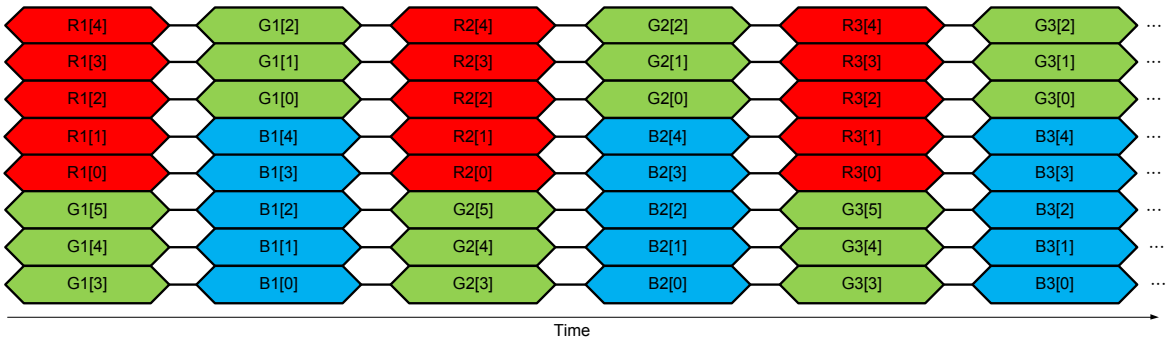

Figure 24-3. Pixel Format of RGB565

24.3. Register Definition

Module name: DISP_DSI Base address: (+a04a0000h)

Address	Name	Width	Register Function
A04A0000	DSI_START	32	DSI Start Register
A04A0008	DSI_INTEN	32	DSI Interrupt Enable Register
A04A000C	DSI_INTSTA	32	DSI Interrupt Status Register
A04A0010	DSI_COM_CON	32	DSI Common Control Register
A04A0014	DSI_MODE_CON	32	DSI Mode Control Register
A04A0018	DSI_TXRX_CON	32	DSI TX RX Control Register
A04A001C	DSI_PSCON	32	DSI Pixel Stream Control Register
A04A002C	DSI_VACT_NL	32	DSI Vertical Active Register
A04A0060	DSI_CMDQ_CON	32	DSI Command Queue Control Register
A04A0064	DSI_HSTX_CKLP_WC	32	DSI HSTX Clock Low-power Mode Word Count Register
A04A0074	DSI_RX_DATA03	32	DSI Receive Packet Data Byte 0 ~ 3 Register
A04A0078	DSI_RX_DATA47	32	DSI Receive Packet Data Byte 4 ~ 7 Register
A04A007C	DSI_RX_DATA8B	32	DSI Receive Packet Data Byte 8 ~ 11 Register
A04A0080	DSI_RX_DATAC	32	DSI Receive Packet Data Byte 12 ~ 15 Register
A04A0084	DSI_RX_RACK	32	DSI Read Data Acknowledge Register

© 2015 - 2017 MediaTek Inc.

This document contains information that is proprietary to MediaTek Inc. ("MediaTek") and/or its licensor(s).
Any unauthorized use, reproduction or disclosure of this document in whole or in part is strictly prohibited.

Address	Name	Width	Register Function
A04A0088	DSI_RX_TRIG_STA	32	DSI Receiver Status Register
A04A0090	DSI_MEM_CONTI	32	DSI Memory Continue Command Register
A04A0094	DSI_FRM_BC	32	DSI Frame Byte Count Register
A04A00A0	DSI_TIME_CON0	32	DSI Timing Control 0 Register
A04A00A4	DSI_TIME_CON1	32	DSI Timing Control 1 Register
A04A0104	DSI_PHY_LCCON	32	DSI PHY Lane Clock Control Register
A04A0108	DSI_PHY_LD0CON	32	DSI PHY Lane 0 Control Register
A04A0110	DSI_PHY_TIMCON0	32	DSI PHY Timing Control 0 Register
A04A0114	DSI_PHY_TIMCON1	32	DSI PHY Timing Control 1 Register
A04A0118	DSI_PHY_TIMCON2	32	DSI PHY Timing Control 2 Register
A04A011C	DSI_PHY_TIMCON3	32	DSI PHY Timing Control 3 Register
A04A0200~ a04a03fc	DSI_CMDQ[n] (n=0~127)	32	DSI Command Queue

A04A0000 DSI_START DSI Start Register 00000000

Bit	31	30	29	28	27	26	25	24	23	22	21	20	19	18	17	16
Name																
Type																
Reset																
Bit	15	14	13	12	11	10	9	8	7	6	5	4	3	2	1	0
Name														SLEEPOUT_START		DSI_START
Type														RW		RW
Reset														0		0

Bit(s)	Name	Description
2	SLEEPOUT_START	**DSI sleep-out operation** Set up this bit to wake up DSI from ULPS mode. This bit is only available when SLEEP_MODE = 1. 0: No effect 1: Start
0	DSI_START	**Starts DSI controller operation** Set up this bit to start DSI control. 0: No effect 1: Start

A04A0008 DSI_INTEN DSI Interrupt Enable Register 00000000

Bit	31	30	29	28	27	26	25	24	23	22	21	20	19	18	17	16
Name																
Type																
Reset																

© 2015 - 2017 MediaTek Inc.
This document contains information that is proprietary to MediaTek Inc. ("MediaTek") and/or its licensor(s).
Any unauthorized use, reproduction or disclosure of this document in whole or in part is strictly prohibited.

Bit	15	14	13	12	11	10	9	8	7	6	5	4	3	2	1	0
Name									TE_TIMEOUT_INT_EN	SLEEPOUT_DONE_INT_EN		FRAME_DONE_INT_EN		TE_RDY_INT_EN	CMD_DONE_INT_EN	LPRX_RD_RDY_INT_EN
Type									RW	RW		RW		RW	RW	RW
Reset									0	0		0		0	0	0

Bit(s)	Name	Description
7	TE_TIMEOUT_INT_EN	**TE timeout interrupt** This interrupt will be issued when the wait time of TE signal exceeds SW-configured threshold 0: Disable 1: Enable
6	SLEEPOUT_DONE_INT_EN	**Enables ULPS sleep-out interrupt** The interrupt will be issued when ULPS sleep out procedure is completed 0: Disable 1: Enable
4	FRAME_DONE_INT_EN	**Frame done interrupt** This interrupt will be issued when the frame transmission is done 0: Disable 1: Enable
2	TE_RDY_INT_EN	**DSI TE ready interrupt** This interrupt will be issued when either BTA TE or external TE is received 0: Disable 1: Enable
1	CMD_DONE_INT_EN	**Enables DSI command mode finished interrupt** This interrupt will be issued when all commands set in command queue are executed 0: Disable 1: Enable
0	LPRX_RD_RDY_INT_EN	**Enables RX data-ready interrupt** This interrupt will be issued when RX data are received through read commands. It is recommended to enable this interrupt to receive data because the read response may be overwritten if another read command exists. An RACK operation should be set after reading data to allow HW continue execution 0: Disable 1: Enable

A04A000C DSI_INTSTA DSI Interrupt Status Register 00000000

Bit	31	30	29	28	27	26	25	24	23	22	21	20	19	18	17	16
Name	DSI_BUSY															
Type	RU															
Reset	0															

This document contains information that is proprietary to MediaTek Inc. ("MediaTek") and/or its licensor(s).
Any unauthorized use, reproduction or disclosure of this document in whole or in part is strictly prohibited.

Bit	15	14	13	12	11	10	9	8	7	6	5	4	3	2	1	0
Name									TE_TIMEOUT_INT_FLAG	SLEEPOUT_DONE_INT_FLAG		FRAME_DONE_INT_FLAG		TE_RDY_INT_FLAG	CMD_DONE_INT_FLAG	LPRX_RD_RDY_INT_FLAG
Type									A1	A1		A1		A1	A1	A1
Reset									0	0		0		0	0	0

Bit(s)	Name	Description
31	DSI_BUSY	**DSI busy status** 0: Idle 1: Busy
7	TE_TIMEOUT_INT_FLAG	**TE time-out interrupt status** 0: Clear interrupt 1: No effect
6	SLEEPOUT_DONE_INT_FLAG	**ULPS sleep-out done interrupt status.** 0: Clear interrupt 1: No effect
4	FRAME_DONE_INT_FLAG	**Frame done interrupt status** 0: Clear interrupt 1: No effect
2	TE_RDY_INT_FLAG	**DSI TE ready interrupt status** 0: Clear interrupt 1: No effect
1	CMD_DONE_INT_FLAG	**DSI command mode finish interrupt status** 0: Clear interrupt 1: No effect
0	LPRX_RD_RDY_INT_FLAG	**RX data-ready interrupt status** 0: Clear interrupt 1: No effect

A04A0010 DSI_COM_CON DSI Common Control Register 00000000

Bit	31	30	29	28	27	26	25	24	23	22	21	20	19	18	17	16
Name																
Type																
Reset																
Bit	**15**	**14**	**13**	**12**	**11**	**10**	**9**	**8**	**7**	**6**	**5**	**4**	**3**	**2**	**1**	**0**
Name														DPHY_RESET		DSI_RESET
Type														RW		RW
Reset														0		0

Bit(s)	Name	Description
2	DPHY_RESET	**DIG_MIPI_TX software reset**

© 2015 - 2017 MediaTek Inc.

This document contains information that is proprietary to MediaTek Inc. ("MediaTek") and/or its licensor(s).
Any unauthorized use, reproduction or disclosure of this document in whole or in part is strictly prohibited.

Bit(s)	Name	Description
		0: De-assert software reset 1: Assert software reset
0	DSI_RESET	**DSI module software reset** 0: De-assert software reset 1: Assert software reset

A04A0014 DSI_MODE_CON DSI Mode Control Register 00000000

Bit	31	30	29	28	27	26	25	24	23	22	21	20	19	18	17	16
Name												SLEEP_MODE				
Type												RW				
Reset												0				
Bit	15	14	13	12	11	10	9	8	7	6	5	4	3	2	1	0
Name																
Type																
Reset																

Bit(s)	Name	Description
20	SLEEP_MODE	**DSI sleep mode for ULPS wake-up operation** This mode is used during wake-up stage to leave ULPS. Set this bit to 1 before setting LANE_NUM to enable output data lane to LP-00; then set up SLEEPOUT_START to start the ULPS-exit process. 0: Disable 1: Enable

A04A0018 DSI_TXRX_CON DSI TX RX Control Register 00000000

Bit	31	30	29	28	27	26	25	24	23	22	21	20	19	18	17	16
Name													TE_TIMEOUT_CHK_EN	TE_WITH_CMD_EN	TYPE1_BTA_SEL	HSTX_CKLP_EN
Type													RW	RW	RW	RW
Reset													0	0	0	0
Bit	15	14	13	12	11	10	9	8	7	6	5	4	3	2	1	0
Name	MAX_RTN_SIZE					EXT_TE_EDGE_SEL	EXT_TE_EN			HSTX_DIS_EOT	LANE_NUM					
Type	RW					RW	RW			RW	RW					
Reset	0	0	0	0		0	0			0	0	0	0	0		

© 2015 - 2017 MediaTek Inc.

This document contains information that is proprietary to MediaTek Inc. ("MediaTek") and/or its licensor(s).
Any unauthorized use, reproduction or disclosure of this document in whole or in part is strictly prohibited.

Bit(s)	Name	Description
19	TE_TIMEOUT_CHK_EN	**Enables TE time-out check mechanism** Enable this bit to turn on DSI TE and external TE time-out check mechanism based on wait time of TE_TIMEOUT. 0: Disable 1: Enable
18	TE_WITH_CMD_EN	**In the tradition design, TE command executes 'bus turnaround' and ignores other settings in the same command column. Combine the TE bit and other commands if this bit is asserted.** 0: Disable 1: Enable
17	TYPE1_BTA_SEL	**Selects TYPE1 BTA mechanism** 0: TYPE1 BTA by frame 1: TYPE1 BTA by packet
16	HSTX_CKLP_EN	**Enables non-continuous clock lane** 0: Disable 1: Enable
15:12	MAX_RTN_SIZE	**Maximum return packet size** This register constrains maximum return packet that the slave side will send back to the host. It takes effect after the host sends 'Set Maximum Return Packet Size' packet to slave.
10	EXT_TE_EDGE_SEL	**Selects trigger edge type of external TE** 0: Rising edge 1: Falling edge
9	EXT_TE_EN	**Enables external TE signal** This bit should be set to receive external TE if LPTE pin is used as external TE pin 0: Disable 1: Enable
6	HSTX_DIS_EOT	**Disables end of transmission packet.** 0: Enable EoTp 1: Disable EoTp
5:2	LANE_NUM	**Lane number** Set up this bit to turn on lane circuit. 4'b0000: Disable all lanes 4'b0001: Enable 1 data lane + 1 clock lane

A04A001C DSI_PSCON **DSI Pixel Stream Control Register** **00000000**

Bit	31	30	29	28	27	26	25	24	23	22	21	20	19	18	17	16
Name							BYTE_SWAP	RGB_SWAP							DSI_PS_SEL	
Type							RW	RW							RW	
Reset							0	0							0	0
Bit	15	14	13	12	11	10	9	8	7	6	5	4	3	2	1	0
Name			DSI_PS_WC													
Type			RW													
Reset			0	0	0	0	0	0	0	0	0	0	0	0	0	0

Bit(s)	Name	Description
25	BYTE_SWAP	**Selects byte order**

© 2015 - 2017 MediaTek Inc.
This document contains information that is proprietary to MediaTek Inc. ("MediaTek") and/or its licensor(s).
Any unauthorized use, reproduction or disclosure of this document in whole or in part is strictly prohibited.

Bit(s)	Name	Description
		For RGB565 type, it swaps bytes between MSB and LSB. For other stream types, this bit is not used. 0: Normal case 1: Byte order change
24	RGB_SWAP	**Selects order of RGB** For all color types, it changes the color order in format of RGB or BGR. 0: Normal case 1: R/B order change
17:16	DSI_PS_SEL	**Selects pixel stream type** 0: Packed pixel stream with 16-bit RGB 5-6-5 format 2: Loosely pixel stream with 24-bit RGB 6-6-6 format 3: Packed pixel stream with 24-bit RGB 8-8-8 format
13:0	DSI_PS_WC	**Word count of long packet in valid pixel data duration** Unit: Byte This value must be (H_SIZE*BPP). Take the QVGA display as an example, the value of PS_WC is (240*3) = 720 in decimal.

A04A002C DSI_VACT_NL DSI Vertical Active Register 00000000

Bit	31	30	29	28	27	26	25	24	23	22	21	20	19	18	17	16
Name																
Type																
Reset																
Bit	15	14	13	12	11	10	9	8	7	6	5	4	3	2	1	0
Name					VACT_NL											
Type					RW											
Reset					0	0	0	0	0	0	0	0	0	0	0	0

Bit(s)	Name	Description
11:0	VACT_NL	**Vertical active duration** Configures frame height of pixels

A04A0060 DSI_CMDQ_CON DSI Command Queue Control Register 00000000

Bit	31	30	29	28	27	26	25	24	23	22	21	20	19	18	17	16
Name																
Type																
Reset																
Bit	15	14	13	12	11	10	9	8	7	6	5	4	3	2	1	0
Name									CMDQ_SIZE							
Type									RW							
Reset									0	0	0	0	0	0	0	0

Bit(s)	Name	Description
7:0	CMDQ_SIZE	**Number of commands in command queue** Range: 1 ~ 127

© 2015 - 2017 MediaTek Inc.
This document contains information that is proprietary to MediaTek Inc. ("MediaTek") and/or its licensor(s).
Any unauthorized use, reproduction or disclosure of this document in whole or in part is strictly prohibited.

Bit(s)	Name	Description

A04A0064 DSI_HSTX_CKLP_WC DSI HSTX Clock Low-power Mode Word Count Register 00010000

Bit	31	30	29	28	27	26	25	24	23	22	21	20	19	18	17	16
Name																HSTX_CKLP_WC_AUTO
Type																RW
Reset																1
Bit	15	14	13	12	11	10	9	8	7	6	5	4	3	2	1	0
Name	HSTX_CKLP_WC															
Type	RW															
Reset	0	0	0	0	0	0	0	0	0	0	0	0	0	0		

Bit(s)	Name	Description
16	HSTX_CKLP_WC_AUTO	**Automatic calculation for HSTX_CKLP_WC**
15:2	HSTX_CKLP_WC	**Word count of non-continuous clock lane counter** Sets up HSTX clock low-power period when HSTX_CKLP_EN = 1. Refer to programming guide for details on the usage.

A04A0074 DSI_RX_DATA03 DSI Receive Packet Data Byte 0 ~ 3 Register 00000000

Bit	31	30	29	28	27	26	25	24	23	22	21	20	19	18	17	16
Name	BYTE3								BYTE2							
Type	RO								RO							
Reset	0	0	0	0	0	0	0	0	0	0	0	0	0	0	0	0
Bit	15	14	13	12	11	10	9	8	7	6	5	4	3	2	1	0
Name	BYTE1								BYTE0							
Type	RO								RO							
Reset	0	0	0	0	0	0	0	0	0	0	0	0	0	0	0	0

Bit(s)	Name	Description
31:24	BYTE3	**RX read data buffer byte 3**
23:16	BYTE2	**RX read data buffer byte 2**
15:8	BYTE1	**RX read data buffer byte 1**
7:0	BYTE0	**RX read data buffer byte 0**

© 2015 - 2017 MediaTek Inc.

This document contains information that is proprietary to MediaTek Inc. ("MediaTek") and/or its licensor(s).
Any unauthorized use, reproduction or disclosure of this document in whole or in part is strictly prohibited.

A04A0078 DSI_RX_DATA47 DSI Receive Packet Data Byte 4 ~ 7 Register 00000000

Bit	31	30	29	28	27	26	25	24	23	22	21	20	19	18	17	16
Name	BYTE7								BYTE6							
Type	RO								RO							
Reset	0	0	0	0	0	0	0	0	0	0	0	0	0	0	0	0
Bit	15	14	13	12	11	10	9	8	7	6	5	4	3	2	1	0
Name	BYTE5								BYTE4							
Type	RO								RO							
Reset	0	0	0	0	0	0	0	0	0	0	0	0	0	0	0	0

Bit(s)	Name	Description
31:24	BYTE7	**RX read data buffer byte 7**
23:16	BYTE6	**RX read data buffer byte 6**
15:8	BYTE5	**RX read data buffer byte 5**
7:0	BYTE4	**RX read data buffer byte 4**

A04A007C DSI_RX_DATA8B DSI Receive Packet Data Byte 8 ~ 11 Register 00000000

Bit	31	30	29	28	27	26	25	24	23	22	21	20	19	18	17	16
Name	BYTEB								BYTEA							
Type	RO								RO							
Reset	0	0	0	0	0	0	0	0	0	0	0	0	0	0	0	0
Bit	15	14	13	12	11	10	9	8	7	6	5	4	3	2	1	0
Name	BYTE9								BYTE8							
Type	RO								RO							
Reset	0	0	0	0	0	0	0	0	0	0	0	0	0	0	0	0

Bit(s)	Name	Description
31:24	BYTEB	**RX read data buffer byte 11**
23:16	BYTEA	**RX read data buffer byte 10**
15:8	BYTE9	**RX read data buffer byte 9**
7:0	BYTE8	**RX read data buffer byte 8**

A04A0080 DSI_RX_DATAC DSI Receive Packet Data Byte 12 ~ 15 Register 00000000

Bit	31	30	29	28	27	26	25	24	23	22	21	20	19	18	17	16
Name	BYTEF								BYTEE							
Type	RO								RO							
Reset	0	0	0	0	0	0	0	0	0	0	0	0	0	0	0	0
Bit	15	14	13	12	11	10	9	8	7	6	5	4	3	2	1	0
Name	BYTED								BYTEC							
Type	RO								RO							
Rese	0	0	0	0	0	0	0	0	0	0	0	0	0	0	0	0

© 2015 - 2017 MediaTek Inc.

This document contains information that is proprietary to MediaTek Inc. ("MediaTek") and/or its licensor(s).
Any unauthorized use, reproduction or disclosure of this document in whole or in part is strictly prohibited.

t																

Bit(s)	Name	Description
31:24	BYTEF	**RX read data buffer byte 15**
23:16	BYTEE	**RX read data buffer byte 14**
15:8	BYTED	**RX read data buffer byte 13**
7:0	BYTEC	**RX read data buffer byte 12**

A04A0084 DSI_RX_RACK DSI Read Data Acknowledge Register 00000000

Bit	31	30	29	28	27	26	25	24	23	22	21	20	19	18	17	16
Name																
Type																
Reset																
Bit	15	14	13	12	11	10	9	8	7	6	5	4	3	2	1	0
Name															**RACK_BYPASS**	**RACK**
Type															RW	W1C
Reset															0	0

Bit(s)	Name	Description
1	RACK_BYPASS	**Enables RX read acknowledge bypass** Set this bit to enable to ignore RACK from SW and continue next commands 1: Does not check RACK 0: Check RACK
0	RACK	**Acknowledges RX read** When a read command is executed and read data are received completely, the LPRX_RD_RDY interrupt will be issued. After read from the RX_DATA buffer, set up this bit to continue to the next command. 1: Acknowledge 0: No effect

A04A0088 DSI_RX_TRIG_STA DSI Receiver Status Register 00000000

Bit	31	30	29	28	27	26	25	24	23	22	21	20	19	18	17	16
Name																
Type																
Reset																
Bit	15	14	13	12	11	10	9	8	7	6	5	4	3	2	1	0
Name											**DIRECTION**	**RX_ULPS**	**RX_TRIG_3**	**RX_TRIG_2**	**RX_TRIG_1**	**RX_TRIG_0**
Type											RU	RU	RU	RU	RU	RU
Reset											0	0	0	0	0	0

© 2015 - 2017 MediaTek Inc.
This document contains information that is proprietary to MediaTek Inc. ("MediaTek") and/or its licensor(s).
Any unauthorized use, reproduction or disclosure of this document in whole or in part is strictly prohibited.

Bit(s)	Name	Description
5	DIRECTION	**Escape turnaround direction** Current bus direction of Data Lane 0. If set to 1, there will be reverse direction transmission on Data Lane0 in Low Power mode. Otherwise, it will be a forward direction transmission. 1: Reverse direction 0: Forward direction
4	RX_ULPS	**RX ULPS (Ultra-low power state)** Entry pattern is 00011110
3	RX_TRIG_3	**Reserved by DSI specification.** Entry pattern is 10100000
2	RX_TRIG_2	**Acknowledge.** Entry pattern is 00100001
1	RX_TRIG_1	**TE.** Entry pattern is 01011101
0	RX_TRIG_0	**Remote application reset.** Entry pattern is 01100010

A04A0090 DSI_MEM_CONTI DSI Memory Continue Command Register 00000000

Bit	31	30	29	28	27	26	25	24	23	22	21	20	19	18	17	16
Name																
Type																
Reset																
Bit	15	14	13	12	11	10	9	8	7	6	5	4	3	2	1	0
Name	DSI_RWMEM_CONTI															
Type	RW															
Reset	0	0	0	0	0	0	0	0	0	0	0	0	0	0	0	0

Bit(s)	Name	Description
15:0	DSI_RWMEM_CONTI	**Read/Write memory continue command.**

A04A0094 DSI_FRM_BC DSI Frame Byte Count Register 00000000

Bit	31	30	29	28	27	26	25	24	23	22	21	20	19	18	17	16
Name												DSI_FRM_BC				
Type												RW				
Reset												0	0	0	0	0
Bit	15	14	13	12	11	10	9	8	7	6	5	4	3	2	1	0
Name	DSI_FRM_BC															
Type	RW															
Reset	0	0	0	0	0	0	0	0	0	0	0	0	0	0	0	0

Bit(s)	Name	Description
20:0	DSI_FRM_BC	**Frame buffer byte count** The total number of byte is expected to be read for type3 command.

© 2015 - 2017 MediaTek Inc.

This document contains information that is proprietary to MediaTek Inc. ("MediaTek") and/or its licensor(s).
Any unauthorized use, reproduction or disclosure of this document in whole or in part is strictly prohibited.

A04A00A0 DSI_TIME_CON0 DSI Timing Control 0 Register 00000080

Bit	31	30	29	28	27	26	25	24	23	22	21	20	19	18	17	16
Name																
Type																
Reset																
Bit	15	14	13	12	11	10	9	8	7	6	5	4	3	2	1	0
Name	ULPS_WAKEUP_PRD															
Type	RW															
Reset	0	0	0	0	0	0	0	0	1	0	0	0	0	0	0	0

Bit(s)	Name	Description
15:0	ULPS_WAKEUP_PRD	**ULPS wakeup period** Cycle count for ultra-low power state (ULPS) wake-up during ULPS-exit sequence. Total wait time = (ULPS_WAKEUP_PRD*1024*DSI clock cycle time) Default value: 5ms under 26MHz DSI byte clock

A04A00A4 DSI_TIME_CON1 DSI Timing Control 1 Register 00002000

Bit	31	30	29	28	27	26	25	24	23	22	21	20	19	18	17	16
Name																
Type																
Reset																
Bit	15	14	13	12	11	10	9	8	7	6	5	4	3	2	1	0
Name	TE_TIMEOUT_PRD															
Type	RW															
Reset	0	0	1	0	0	0	0	0	0	0	0	0	0	0	0	0

Bit(s)	Name	Description
15:0	TE_TIMEOUT_PRD	**TE time-out check period** Cycle count to check TE time-out and issue time-out interrupt when waiting for TE signal. Total wait time = (TE_TIMEOUT_PRD*16384*DSI clock cycle time) Default value: 5sec under 26MHz DSI byte clock

A04A0104 DSI_PHY_LCCON DSI PHY Lane Clock Control Register 00000000

Bit	31	30	29	28	27	26	25	24	23	22	21	20	19	18	17	16
Name																
Type																
Reset																

© 2015 - 2017 MediaTek Inc.
This document contains information that is proprietary to MediaTek Inc. ("MediaTek") and/or its licensor(s).
Any unauthorized use, reproduction or disclosure of this document in whole or in part is strictly prohibited.

Bit	15	14	13	12	11	10	9	8	7	6	5	4	3	2	1	0
Name														LC_WAKEUP_EN	LC_ULPM_EN	LC_HSTX_EN
Type														RW	RW	RW
Reset														0	0	0

Bit(s)	Name	Description
2	LC_WAKEUP_EN	**Enables clock lane wake-up** Make the clock lane wake-up from ultra-low power mode. Make sure DSI_EN = 1 when setting this register
1	LC_ULPM_EN	**Enables clock lane ULPS** Make the clock lane go to ultra-low power mode. Make sure DSI_EN = 1 when setup this register
0	LC_HSTX_EN	**Enables clock lane HS mode** Start clock lane high speed transmission.

A04A0108 DSI_PHY_LD0CON DSI PHY Lane 0 Control Register 00000000

Bit	31	30	29	28	27	26	25	24	23	22	21	20	19	18	17	16
Name																
Type																
Reset																
Bit	15	14	13	12	11	10	9	8	7	6	5	4	3	2	1	0
Name														Lo_WAKEUP_EN	Lo_ULPM_EN	Lo_RM_TRIG_EN
Type														RW	RW	RW
Reset														0	0	0

Bit(s)	Name	Description
2	Lo_WAKEUP_EN	**Enables data lane 0 wake-up** Make the data lane 0 wake-up from ultra-low power mode.
1	Lo_ULPM_EN	**Enables data lane 0 ULPS** Make the data lane 0 go to ultra-low power mode.
0	Lo_RM_TRIG_EN	**Enables data lane 0 remote application trigger** Send application trigger to slave side.

A04A0110 DSI_PHY_TIMCON0 DSI PHY Timing Control 0 Register 14140A0A

Bit	31	30	29	28	27	26	25	24	23	22	21	20	19	18	17	16
Name	DA_HS_TRAIL								DA_HS_ZERO							
Type	RW								RW							
Reset	0	0	0	1	0	1	0	0	0	0	0	1	0	1	0	0
Bit	15	14	13	12	11	10	9	8	7	6	5	4	3	2	1	0
Name	DA_HS_PREP								LPX							

© 2015 - 2017 MediaTek Inc.

This document contains information that is proprietary to MediaTek Inc. ("MediaTek") and/or its licensor(s).
Any unauthorized use, reproduction or disclosure of this document in whole or in part is strictly prohibited.

Type	RW								RW							
Reset	0	0	0	0	1	0	1	0	0	0	0	0	1	0	1	0

Bit(s)	Name	Description
31:24	DA_HS_TRAIL	**Control for timing parameter: T_HS-Trail**
23:16	DA_HS_ZERO	**Control for timing parameter: T_HS-Zero**
15:8	DA_HS_PREP	**Control for timing parameter: T_HS-Prepare**
7:0	LPX	**Control for timing parameter: T_LPX**

A04A0114 DSI_PHY_TIMCON1 DSI PHY Timing Control 1 Register 0E1A1632

Bit	31	30	29	28	27	26	25	24	23	22	21	20	19	18	17	16
Name	**CLK_HS_EXIT**								**TA_GET**							
Type	RW								RW							
Reset	0	0	0	0	1	1	1	0	0	0	0	1	1	0	1	0
Bit	15	14	13	12	11	10	9	8	7	6	5	4	3	2	1	0
Name	**TA_SURE**								**TA_GO**							
Type	RW								RW							
Reset	0	0	0	1	0	1	1	0	0	0	1	1	0	0	1	0

Bit(s)	Name	Description
31:24	CLK_HS_EXIT	**Control for timing parameter: T_HS-Exit for clock lane**
23:16	TA_GET	**Control for timing parameter: T_TA-Get**
15:8	TA_SURE	**Control for timing parameter: T_TA-Sure**
7:0	TA_GO	**Control for timing parameter: T_TA-Go**

A04A0118 DSI_PHY_TIMCON2 DSI PHY Timing Control 2 Register 14140000

Bit	31	30	29	28	27	26	25	24	23	22	21	20	19	18	17	16
Name	**CLK_HS_TRAIL**								**CLK_HS_ZERO**							
Type	RW								RW							
Reset	0	0	0	1	0	1	0	0	0	0	0	1	0	1	0	0
Bit	15	14	13	12	11	10	9	8	7	6	5	4	3	2	1	0
Name																
Type																
Reset																

Bit(s)	Name	Description
31:24	CLK_HS_TRAIL	**Control for timing parameter: T_CLK-Trail**
23:16	CLK_HS_ZERO	**Control for timing parameter: T_CLK-Zero**

A04A011C DSI_PHY_TIMCON3 DSI PHY Timing Control 3 Register 000E0E0A

Bit	31	30	29	28	27	26	25	24	23	22	21	20	19	18	17	16
Name							**DA_HS_EXIT**									
Type							RW									
Reset							0	0	0	0	0	0	1	1	1	0

© 2015 - 2017 MediaTek Inc.

This document contains information that is proprietary to MediaTek Inc. ("MediaTek") and/or its licensor(s).
Any unauthorized use, reproduction or disclosure of this document in whole or in part is strictly prohibited.

Bit	15	14	13	12	11	10	9	8	7	6	5	4	3	2	1	0
Name	CLK_HS_POST								CLK_HS_PREP							
Type	RW								RW							
Reset	0	0	0	0	1	1	1	0	0	0	0	0	1	0	1	0

Bit(s)	Name	Description
25:16	DA_HS_EXIT	**Control for timing parameter: T_HS-Exit for data lane**
15:8	CLK_HS_POST	**Control for timing parameter: T_CLK-Post**
7:0	CLK_HS_PREP	**Control for timing parameter: T_CLK-Prepare**

A04A0200 ~ A04A03FC **DSI_CMDQ[n](n=0~127)** **DSI Command Queue** **00000000**

Bit	31	30	29	28	27	26	25	24	23	22	21	20	19	18	17	16
Name	DATA_1								DATA_0							
Type	RW								RW							
Reset	0	0	0	0	0	0	0	0	0	0	0	0	0	0	0	0
Bit	15	14	13	12	11	10	9	8	7	6	5	4	3	2	1	0
Name	DATA_ID								RESV		TE	CL	HS	BTA	TYPE	
Type	RW								RW		RW	RW	RW	RW	RW	
Reset	0	0	0	0	0	0	0	0	0	0	0	0	0	0	0	0

Bit(s)	Name	Description
31:24	DATA_1	**Data byte 1 of command**
23:16	DATA_0	**Data byte 0 of command**
15:8	DATA_ID	**Data ID of command**
7:6	RESV	**Reserved**
5	TE	**Enables internal or external TE** 0: Disable 1: Enable
4	CL	**Selects DCS byte** 0: 1-byte DCS 1: 2-byte DCS
3	HS	**Enables high-speed transmission** 0: LPTX transmission 1: HSTX transmission
2	BTA	**Enables BTA** 0: Disable 1: Enable
1:0	TYPE	**Command types** 0: Type-0 command 1: Type-1 command 2: Type-2 command 3: Type-3 command

© 2015 - 2017 MediaTek Inc.

This document contains information that is proprietary to MediaTek Inc. ("MediaTek") and/or its licensor(s).
Any unauthorized use, reproduction or disclosure of this document in whole or in part is strictly prohibited.

25. Camera Interface

25.1. General Description

Camera interface supports VGA Serial Sensor YUV422/RGB565 interface. No other color process is included in CAM.

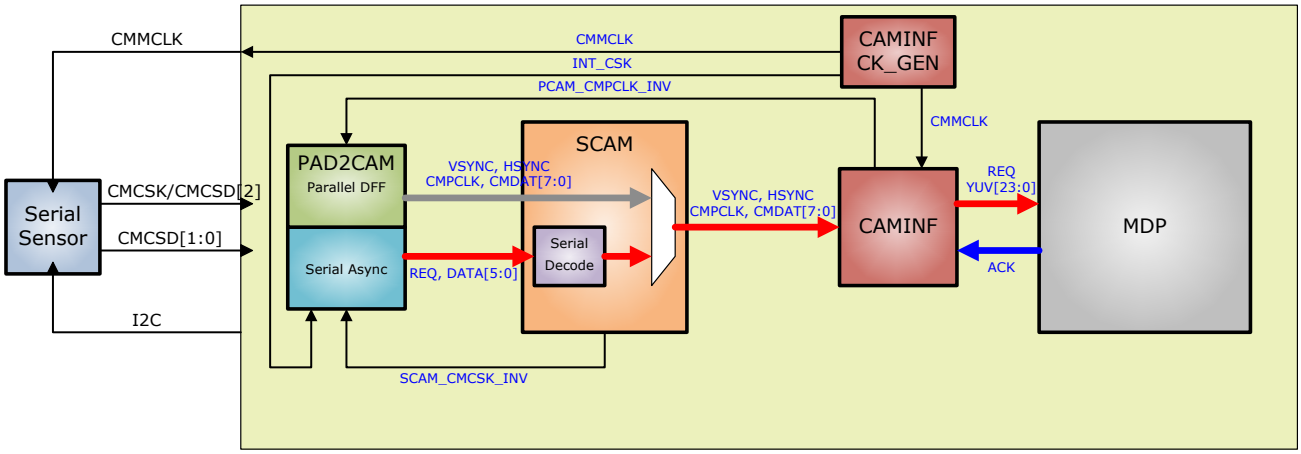

Figure 25-1. Serial Sensor Block Diagram

25.2. Application Notes

- Configuration procedure for disable clock.

```
CAM_CSMODE = CAM_CSMODE & 0xFFFFFFFE;
CAM_VFCON = CAM_VFCON & 0xFFFFFFBF;
CAM_RESET = CAM_RESET | 0x00010000;
while ((CAM_RESET&0x00010000) == 1);
CAM_INTEN = CAM_INTEN 0xFFFEFE64;
SWInt = CAM_INTSTA & 0x0000019B;
Disable clock;
```

25.3. Register Definitions

Address	Name	Width	Register Function
A0420000	CAM_PHSCNT	32	TG Phase Counter Register The register is for configuration of timing generator.
A0420004	CAM_CAMWIN	32	Sensor Size Configuration Register The register is for configuration of sensor size.
A0420008	CAM_GRABCOL	32	TG Grab Range Start/End Pixel Configuration Register The register specifies the horizontal range of grabbed window.
A042000C	CAM_GRABROW	32	TG Grab Range Start/End Line Configuration Register

© 2015 - 2017 MediaTek Inc.

This document contains information that is proprietary to MediaTek Inc. (“MediaTek”) and/or its licensor(s).
Any unauthorized use, reproduction or disclosure of this document in whole or in part is strictly prohibited.

Address	Name	Width	Register Function
			The register specifies the vertical range of grabbed window.
A0420010	CAM_CSMODE	32	Sensor Mode Configuration Register The register is for configuration of sensor mode.
A0420018	CAM_VFCON	32	View Finder Mode Control Register The register is for configuration of view finder mode.
A042001C	CAM_INTEN	32	Camera Module Interrupt Enable Register The register is for configuration of interrupts.
A0420020	CAM_INTSTA	32	Camera Module Interrupt Status Register The register shows up the interrupt status of caminf.
A0420024	CAM_PATH	32	Camera Module Path Configuration Register The register is for configuration of caminf data path.
A0420190	CAM_MDLCFG1	32	Sensor Test Model Configuration Register 1 The register is for configuration of sensor test model.
A0420194	CAM_MDLCFG2	32	Sensor Test Model Configuration Register 2 The register is for configuration of sensor test model.
A04201A0	CAMCRZ_CTRL	32	Camera to CRZ Control Register The register is for configuration of resizer's overrun interrupt.
A04201A4	CAMCRZ_STA	32	Camera to RESIZER Status Register The register shows up the caminf status of resizer.
A04201D4	TG_STATUS	32	TG Status Register The register shows up the status of timing generator.
A04201D8	CAM_RESET	32	CAM Reset Register The register is for configuration of caminf reset.
A04201E4	FLASH_CTRL1	32	Flash Control Register The register is for configuration of flash interrupt.
A042081C	CAM_PHSCNT1	32	TG Phase Counter Register 1 The register is for extending configuration of timing generator.
A0420820	CAM_PHSCNT2	32	TG Phase Counter Register 2 The register is for configuration of timing generator.
A0420824	CAM_DCM_CTRL	32	DCM Control Register The register is for configuration of DCM.
A0420828	CAM_DCM_STATUS	32	DCM Status Register The register shows up the status of DCM.

All undefined bit fields must be set as the default values.

© 2015 - 2017 MediaTek Inc.

This document contains information that is proprietary to MediaTek Inc. (“MediaTek”) and/or its licensor(s).
Any unauthorized use, reproduction or disclosure of this document in whole or in part is strictly prohibited.

A0420000 CAM_PHSCNT TG Phase Counter Register 01010011

Bit	31	30	29	28	27	26	25	24	23	22	21	20	19	18	17	16
Name	PCEN		CLKEN	CLKPOL	CLKCNT				CLKRS				CLKFL			
Type	RW		RW	RW	RW				RW				RW			
Reset	0	0	0	0	0	0	0	1	0	0	0	0	0	0	0	1
Bit	15	14	13	12	11	10	9	8	7	6	5	4	3	2	1	0
Name	HVALID_EN	CAM_PCLK_INV	PXCLK_INV	PXCLK_IN	CLKFL_POL			TGCLK_SEL								
Type	RW	RW	RW	RW	RW			RW								
Reset	0	0	0	0	0	0	0	0	0	0	0	1	0	0	0	1

Bit(s)	Name	Description
31	PCEN	**TG phase counter enable control.** 0: Disable. 1: Enable.
29	CLKEN	**Enable sensor master clock (mclk) output to sensor.** 0: Disable. 1: Enable.
28	CLKPOL	**Sensor master clock polarity control.** 0: The same polarity as source clock. 1: Inverse polarity as source clock.
27:24	CLKCNT	**Sensor master clock frequency divider control. Sensor master clock will be TGCLK_SEL/(CLKCNT+1).**
23:20	CLKRS	**Sensor master clock rising edge control.**
19:16	CLKFL	**Sensor master clock falling edge control.**
15	HVALID_EN	**Sensor hvalid or href enable.** 0: Disable. 1: Enable.
14	CAM_PCLK_INV	**Pixel clock inverse in CAM.** 0: The same polarity as source clock. 1: Inverse polarity as source clock.
13	PXCLK_INV	**The polarity of sampling data in CAM.** 0: Sample data at positive edge. 1: Sample data at negative edge.
12	PXCLK_IN	**Pixel clock synchronizer enable. PXCLK_IN must be enabled.** 0: Disable. 1: Enable.
11	CLKFL_POL	**Sensor clock divider auxiliary. If CLKCNT is even and is not equal to 0, CLKFL_POL must be 1'b1 to generate half cycle to achieve the target clock rate.**
8	TGCLK_SEL	**Sensor master based clock selection (0: 104/133 MHz, 1: 48MHz).** 0: engine clock bclk (104/133 MHz). 1: PLL clock (48 MHz).

A0420004 CAM_CAMWIN Sensor Size Configuration Register 1FFF0FFF

Bit	31	30	29	28	27	26	25	24	23	22	21	20	19	18	17	16
Name				PIXELS												
Type				RW												
Reset	0	0	0	1	1	1	1	1	1	1	1	1	1	1	1	1
Bit	15	14	13	12	11	10	9	8	7	6	5	4	3	2	1	0
Name					LINES											
Type					RW											
Reset	0	0	0	0	1	1	1	1	1	1	1	1	1	1	1	1

Bit(s)	Name	Description

© 2015 - 2017 MediaTek Inc.

This document contains information that is proprietary to MediaTek Inc. ("MediaTek") and/or its licensor(s).
Any unauthorized use, reproduction or disclosure of this document in whole or in part is strictly prohibited.

28:16	PIXELS	**Total input pixel number.**
11:0	LINES	**Total input line number.**

A0420008 CAM_GRABCOL TG Grab Range Start/End Pixel Configuration Register 00000000

Bit	31	30	29	28	27	26	25	24	23	22	21	20	19	18	17	16
Name					START											
Type					RW											
Reset	0	0	0	0	0	0	0	0	0	0	0	0	0	0	0	0
Bit	15	14	13	12	11	10	9	8	7	6	5	4	3	2	1	0
Name				END												
Type				RW												
Reset	0	0	0	0	0	0	0	0	0	0	0	0	0	0	0	0

Bit(s)	Name	Description
27:16	START	**Grab start pixel number (first pixel starts from 0).**
12:0	END	**Grab end pixel number (first pixel starts from 0). The number of grabbed pixels must be larger than 1 and a multiple of 4.**

A042000C CAM_GRABROW TG Grab Range Start/End Line Configuration Register 00000000

Bit	31	30	29	28	27	26	25	24	23	22	21	20	19	18	17	16
Name					START											
Type					RW											
Reset	0	0	0	0	0	0	0	0	0	0	0	0	0	0	0	0
Bit	15	14	13	12	11	10	9	8	7	6	5	4	3	2	1	0
Name					END											
Type					RW											
Reset	0	0	0	0	0	0	0	0	0	0	0	0	0	0	0	0

Bit(s)	Name	Description
27:16	START	**Grab start line number (first line starts from 1, line 0 is inside VSYNC). Note that this number should be set start from 1, set 0 to this parameter will cause memory output data uncompleted.**
11:0	END	**Grab end line number (first line starts from 1). The number of grabbed lines must be larger than 1.**

A0420010 CAM_CSMODE Sensor Mode Configuration Register 00000000

Bit	31	30	29	28	27	26	25	24	23	22	21	20	19	18	17	16
Name																
Type																
Reset	0	0	0	0	0	0	0	0	0	0	0	0	0	0	0	0
Bit	15	14	13	12	11	10	9	8	7	6	5	4	3	2	1	0
Name									VSPOL	HSPOL	PWRON	RST	AUTO			EN
Type									RW	RW	RW	RW	RW			RW
Reset	0	0	0	0	0	0	0	0	0	0	0	0	0	0	0	0

Bit(s)	Name	Description
7	VSPOL	**Sensor Vsync input polarity.** 0: The same polarity as sensor vsync (low active sensors). 1: Inverse polarity as sensor vsync (high active sensors).
6	HSPOL	**Sensor Hsync input polarity.** 0: The same polarity as sensor hsync (high active sensors). 1: Inverse polarity as sensor hsync (low active sensors).

© 2015 - 2017 MediaTek Inc.

This document contains information that is proprietary to MediaTek Inc. ("MediaTek") and/or its licensor(s).
Any unauthorized use, reproduction or disclosure of this document in whole or in part is strictly prohibited.

5	PWRON	**Sensor power on control, active level depends on sensor.**
4	RST	**Sensor reset control, active level depends on sensor.**
3	AUTO	**Auto lock sensor input horizontal pixel numbers enable.**
0	EN	**Sensor process enable.** 0: Disable. 1: Enable.

A0420018 CAM_VFCON View Finder Mode Control Register 00000000

Bit	31	30	29	28	27	26	25	24	23	22	21	20	19	18	17	16
Name	AV_SYNC_SEL	VD_INT_POL			AV_SYNC_LINENO											
Type	RW	RW			RW											
Reset	0	0	0	0	0	0	0	0	0	0	0	0	0	0	0	0
Bit	15	14	13	12	11	10	9	8	7	6	5	4	3	2	1	0
Name						SP_DELAY			SP_MODE	TAKE_PIC				FR_CON		
Type						RW			RW	RW				RW		
Reset	0	0	0	0	0	0	0	0	0	0	0	0	0	0	0	0

Bit(s)	Name	Description
31	AV_SYNC_SEL	**Av_sync start point selection.** 0: Start from AV_SYNC_LINENO. 1: Start from vsync.
30	VD_INT_POL	**Vsync interrupt polarity.** 0: Vsync rising edge. 1: Vsync falling edge.
27:16	AV_SYNC_LINENO	**Av_sync desired line count (first line starts from 1).**
10:8	SP_DELAY	**Still picture mode frame delay. When SP_DELAY is nonzero, TAKE_PIC will start to trigger after SP_DELAY Vsync singals.**
7	SP_MODE	**Still picture mode.** 0: Preview mode, ISP will process every frame sensor sends. 1: Capture mode, ISP will only process first frame sensor sends after TAKE_PIC is set
6	TAKE_PIC	**Take picture request. Caminf enable signal. TAKE_PIC must be enabled while caminf is working.** 0: Disable. 1: Enable.
2:0	FR_CON	**Frame sampling rate control.** 0: Every frame is sampled. 1: One frame is sampled every 2 frames. 2: One frame is sampled every 3 frames. 3: One frame is sampled every 4 frames. 4: One frame is sampled every 5 frames. 5: One frame is sampled every 6 frames. 6: One frame is sampled every 7 frames. 7: One frame is sampled every 8 frames.

A042001C CAM_INTEN Camera Module Interrupt Enable Register 00000000

Bit	31	30	29	28	27	26	25	24	23	22	21	20	19	18	17	16
Name	VSYNC_INT_EN															INT_WCLR_EN
Type	RW															RW
Reset	0	0	0	0	0	0	0	0	0	0	0	0	0	0	0	0

© 2015 - 2017 MediaTek Inc.

This document contains information that is proprietary to MediaTek Inc. ("MediaTek") and/or its licensor(s).
Any unauthorized use, reproduction or disclosure of this document in whole or in part is strictly prohibited.

Bit	15	14	13	12	11	10	9	8	7	6	5	4	3	2	1	0
Name								AV_SYNC_INT	FLASH_INT			ISPDONE	IDLE		REZOVRUN	EXPDO
Type								RW	RW			RW	RW		RW	RW
Reset	0	0	0	0	0	0	0	0	0	0	0	0	0	0	0	0

Bit(s)	Name	Description
31	VSYNC_INT_EN	**Vsync interrupt and flash interrupt switch.** 0: Flash interrupt. 1: Vsync interrupt.
16	INT_WCLR_EN	**Interrupt read clear/write clear switch.** 0: Read clear mode. 1: Write clear mode.
8	AV_SYNC_INT	**AV sync interrupt enable.** 0: Disable. 1: Enable.
7	FLASH_INT	**Flash interrupt enable, note that VSYNC_INT_EN switch flash and vsync interrupt.** 0: Disable. 1: Enable.
4	ISPDONE	**ISP done interrupt enable.** 0: Disable. 1: Enable.
3	IDLE	**Returning idle state interrupt enable.** 0: Disable. 1: Enable.
1	REZOVRUN	**Resizer overrun interrupt enable.** 0: Disable. 1: Enable.
0	EXPDO	**Exposure done interrupt enable.** 0: Disable. 1: Enable.

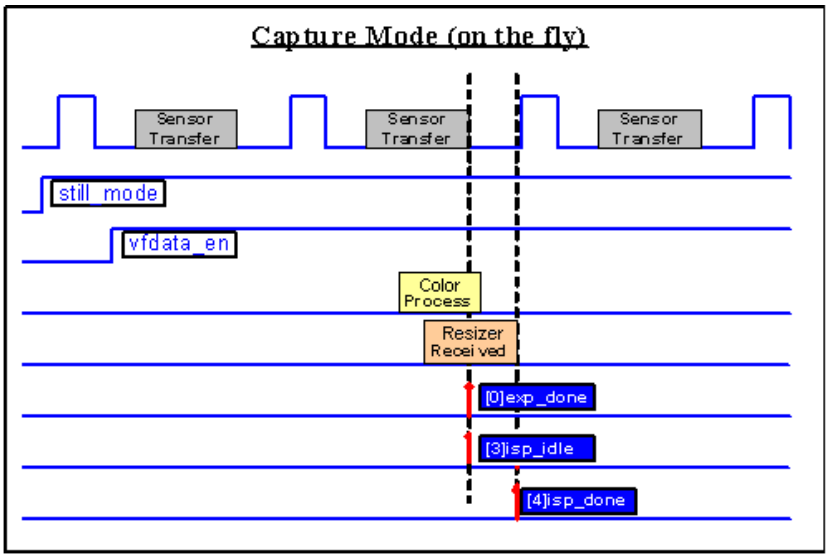

Figure 25-2. Capture Mod Interrupt Condition Chart.

© 2015 - 2017 MediaTek Inc.

This document contains information that is proprietary to MediaTek Inc. ("MediaTek") and/or its licensor(s).
Any unauthorized use, reproduction or disclosure of this document in whole or in part is strictly prohibited.

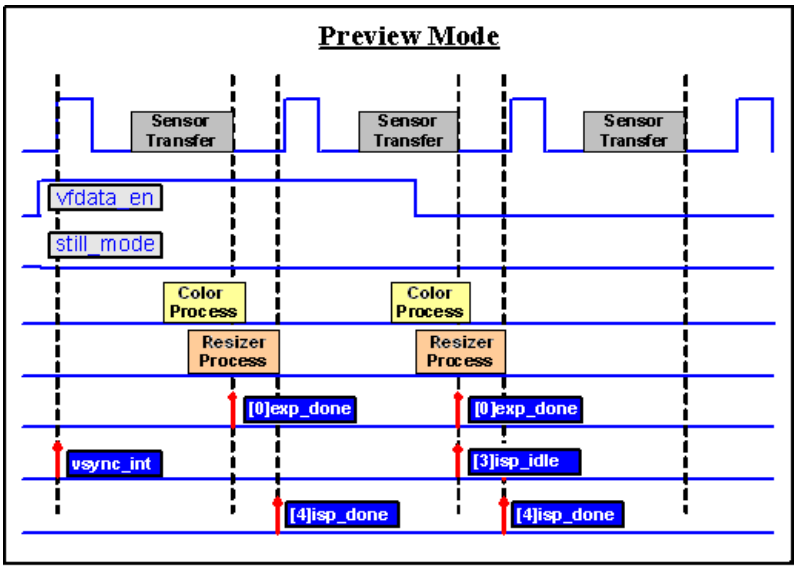

Figure 25-3. Preview Mode Interrupt Conndition Chart

A0420020 CAM_INTSTA Camera Module Interrupt Status Register 00000000

Bit	31	30	29	28	27	26	25	24	23	22	21	20	19	18	17	16
Name																
Type																
Reset	0	0	0	0	0	0	0	0	0	0	0	0	0	0	0	0
Bit	15	14	13	12	11	10	9	8	7	6	5	4	3	2	1	0
Name								AV_SYNC_INT	FLASH_INT			ISPDONE	IDLE		REZOVRUN	EXPDO
Type								RO	RO			RO	RO		RO	RO
Reset	0	0	0	0	0	0	0	0	0	0	0	0	0	0	0	0

Bit(s)	Name	Description
8	AV_SYNC_INT	**AV sync interrupt status, occurred when desired line count equal AV_SYNC_LINENO in CAM_VFCON(CAM+0X018).**
7	FLASH_INT	**TG interrupt status, occurred when flash light pulse is done.**
4	ISPDONE	**ISP done interrupt status, occurred when ISP finish full frame process.**
3	IDLE	**Returning idle state interrupt status, occurred when ISP is in IDLE state.**
1	REZOVRUN	**Resizer over run interrupt status, occurred when ISP to resizer buffer is overrun.**
0	EXPDO	**Exposure done interrupt status, occurred when sensor sends full frame.**

A0420024 CAM_PATH Camera Module Path Configuration Register 00000030

Bit	31	30	29	28	27	26	25	24	23	22	21	20	19	18	17	16
Name																
Type																
Reset	0	0	0	0	0	0	0	0	0	0	0	0	0	0	0	0
Bit	15	14	13	12	11	10	9	8	7	6	5	4	3	2	1	0
Name			SWAP_Y	SWAP_CBCR			INTYPE_SEL									
Type			RW	RW			RW									

This document contains information that is proprietary to MediaTek Inc. ("MediaTek") and/or its licensor(s).
Any unauthorized use, reproduction or disclosure of this document in whole or in part is strictly prohibited.

Reset	0	0	0	0	0	0	0	0	0	0	1	1	0	0	0	0

Bit(s)	Name	Description
13	SWAP_Y	**YCbCr in swap Y, note that INTYPE_SEL should be set to 1.** 0: CYCYCYCY~. 1: YCYCYCYC~.
12	SWAP_CBCR	**Input swap Cb Cr/R B.** 0: UYVYUYVY~/RGB~. 1: VYUYVYUY~/BGR~.
9:8	INTYPE_SEL	**Input type selection.** 0: Reserved. 1: YUV422 format. 2: RGB565 format. others: Reserved.

A0420190 CAM_MDLCFG1 Sensor Test Model Configuration Register 1 00000000

Bit	31	30	29	28	27	26	25	24	23	22	21	20	19	18	17	16
Name	VSYNC								IDLE_PIXEL_PER_LINE							
Type	RW								RW							
Reset	0	0	0	0	0	0	0	0	0	0	0	0	0	0	0	0
Bit	15	14	13	12	11	10	9	8	7	6	5	4	3	2	1	0
Name			LINECHG_EN	FULL_RANGE			ON	RST	STILL	PATTERN	PIXEL_SEL		CLK_DIV			
Type			RW	RW			RW	RW	RW	RW	RW		RW			
Reset	0	0	0	0	0	0	0	0	0	0	0	0	0	0	0	0

Bit(s)	Name	Description
31:24	VSYNC	**VSYNC high duration in line unit(IDLE_PIXEL_PER_LINE + PIXEL).**
23:16	IDLE_PIXEL_PER_LINE	**HSYNC low duration in pixel unit.**
13	LINECHG_EN	**Lines change mode enable.** 0: Disable. 1: Enable.
12	FULL_RANGE	**Sensor model full range enable. When full range is enable, pattern data value will increase progressively every line output.** 0: Disable. 1: Enable.
9	ON	**Enable sensor model.** 0: Disable. 1: Enable.
8	RST	**Reset sensor model.** 0: Disable. 1: Enable.
7	STILL	**Still picture mode. Value 1 will generate fix patterns.** 0: Disable. 1: Enable.
6	PATTERN	**Sensor model test pattern selection.** 0: Mode 2. 1: Mode 1.
5:4	PIXEL_SEL	**Sensor model output pixel selection.** 0: All pixels. 1: 2'b01 pixel. 2: 2'b10 pixel. 3: 2'b00 and 2'b11 pixels.
3:0	CLK_DIV	**Pixel_Clock/System_Clock ratio.**

© 2015 - 2017 MediaTek Inc.

This document contains information that is proprietary to MediaTek Inc. (“MediaTek”) and/or its licensor(s).
Any unauthorized use, reproduction or disclosure of this document in whole or in part is strictly prohibited.

A0420194 CAM_MDLCFG2 Sensor Test Model Configuration Register 2 00000000

Bit	31	30	29	28	27	26	25	24	23	22	21	20	19	18	17	16
Name						LINE										
Type						RW										
Reset	0	0	0	0	0	0	0	0	0	0	0	0	0	0	0	0
Bit	15	14	13	12	11	10	9	8	7	6	5	4	3	2	1	0
Name						PIXEL										
Type						RW										
Reset	0	0	0	0	0	0	0	0	0	0	0	0	0	0	0	0

Bit(s)	Name	Description
26:16	LINE	**Sensor model line number.**
10:0	PIXEL	**Sensor model pixel number (HSYNC high duration in pixel unit).**

A04201A0 CAMCRZ_CTRL Camera to CRZ Control Register 0A000000

Bit	31	30	29	28	27	26	25	24	23	22	21	20	19	18	17	16
Name												REZ_OVRUN_FLIMIT_EN	REZ_OVRUN_FLIMIT_NO			
Type	0	0	0	0	1	0	1	0	0	0	0	RW	RW			
Reset												0	0	0	0	0
Bit	15	14	13	12	11	10	9	8	7	6	5	4	3	2	1	0
Name																
Type																
Reset	0	0	0	0	0	0	0	0	0	0	0	0	0	0	0	0

Bit(s)	Name	Description
20	REZ_OVRUN_FLIMIT_EN	**Camera to resizer interface overrun frame count limit enable. When enabled, if REZ_OVRUN_FCOUNT (CAM+01A4[19:16]) equal REZ_OVRUN_FLIMIT_NO,REZOVRUN (CAM+0020[1]) will be asserted.** 0: Disable. 1: Enable.
19:16	REZ_OVRUN_FLIMIT_NO	**Camera to resizer interface overrun frame count limit number.**

A04201A4 CAMCRZ_STA Camera to RESIZER Status Register 00000000

Bit	31	30	29	28	27	26	25	24	23	22	21	20	19	18	17	16
Name						CAMCRZ_FIFOCNT							REZ_OVRUN_FCOUNT			
Type						RO							RO			
Reset	0	0	0	0	0	0	0	0	0	0	0	0	0	0	0	0
Bit	15	14	13	12	11	10	9	8	7	6	5	4	3	2	1	0
Name																
Type																
Reset	0	0	0	0	0	0	0	0	0	0	0	0	0	0	0	0

© 2015 - 2017 MediaTek Inc.

This document contains information that is proprietary to MediaTek Inc. ("MediaTek") and/or its licensor(s).
Any unauthorized use, reproduction or disclosure of this document in whole or in part is strictly prohibited.

Bit(s)	Name	Description
26:24	CAMCRZ_FIFOCNT	**Camera to resizer FIFO count.**
19:16	REZ_OVRUN_FCOUNT	**Camera to resizer interface overrun frame count. This frame count is for capture mode. REZ_OVRUN_FCOUNT will be reset every time TAKE_PIC (CAM _ 0018 [6]) is set to 0, will be add 1 when REZOVRUN occurred in a frame.**

A04201D4 TG_STATUS TG Status Register 00000000

Bit	31	30	29	28	27	26	25	24	23	22	21	20	19	18	17	16
Name		CAM_BUSY	CAPTURE_BUSY	SYN_VF_DATA_EN	LINE_COUNT											
Type		RO	RO	RO	RO											
Reset	0	0	0	0	0	0	0	0	0	0	0	0	0	0	0	0
Bit	15	14	13	12	11	10	9	8	7	6	5	4	3	2	1	0
Name				PIXEL_COUNT												
Type				RO												
Reset	0	0	0	0	0	0	0	0	0	0	0	0	0	0	0	0

Bit(s)	Name	Description
30	CAM_BUSY	**Cam busy flag.**
29	CAPTURE_BUSY	**Capture busy flag.**
28	SYN_VF_DATA_EN	**View finder enable register status.**
27:16	LINE_COUNT	**Input frame line counter.**
12:0	PIXEL_COUNT	**Input frame pixel counter.**

A04201D8 CAM_RESET CAM Reset Register 01000000

Bit	31	30	29	28	27	26	25	24	23	22	21	20	19	18	17	16
Name		CAM_CS														SW_RESET
Type		RO														RW
Reset	0	0	0	0	0	0	0	1	0	0	0	0	0	0	0	0
Bit	15	14	13	12	11	10	9	8	7	6	5	4	3	2	1	0
Name	CAM_FRAME_COUNT															HARD_RESET
Type	RO															RW
Reset	0	0	0	0	0	0	0	0	0	0	0	0	0	0	0	0

Bit(s)	Name	Description
30:24	CAM_CS	**Cam status.** 1: Cam idle. 2: Preview idle. 4: Preview process. 8: Preview wait. 16: Capture process. 32: Caputre done. 64: Capture idle.
16	SW_RESET	**Camera software reset. When software reset is enable, camera will automatically stop process including memory access and will assert hardware reset at suitable time. After reset is done, SW_RESET will be de-asserted.**
15:8	CAM_FRAME_COUNT	**Cam process frame count number.**

© 2015 - 2017 MediaTek Inc.

This document contains information that is proprietary to MediaTek Inc. ("MediaTek") and/or its licensor(s).
Any unauthorized use, reproduction or disclosure of this document in whole or in part is strictly prohibited.

0	HARD_RESET	**ISP reset. Note that reset should be asserted longer than 100us to make sure GMC command done.**

A04201E4 FLASH_CTRL1 Flash Control Register 00000000

Bit	31	30	29	28	27	26	25	24	23	22	21	20	19	18	17	16
Name					LINE											
Type					RW											
Reset	0	0	0	0	0	0	0	0	0	0	0	0	0	0	0	0
Bit	15	14	13	12	11	10	9	8	7	6	5	4	3	2	1	0
Name					PIXEL											
Type					RW											
Reset	0	0	0	0	0	0	0	0	0	0	0	0	0	0	0	0

Bit(s)	Name	Description
27:16	LINE	**Trigger flash interrupt at this vertical position (first line starts from 0).**
11:0	PIXEL	**Trigger flash interrupt at this horizontal position.**

A042081C CAM_PHSCNT1 TG Phase Counter Register 1 00000000

Bit	31	30	29	28	27	26	25	24	23	22	21	20	19	18	17	16
Name																
Type																
Reset	0	0	0	0	0	0	0	0	0	0	0	0	0	0	0	0
Bit	15	14	13	12	11	10	9	8	7	6	5	4	3	2	1	0
Name							CLKCNT_EXT				CLKRS_EXT				CLKFL_EXT	
Type							RW				RW				RW	
Reset	0	0	0	0	0	0	0	0	0	0	0	0	0	0	0	0

Bit(s)	Name	Description
9:8	CLKCNT_EXT	**Sensor master clock frequency divider control. Sensor master clock will be TGCLK_SEL/({CLKCNT_EXT, CLKCNT}+1).**
5:4	CLKRS_EXT	**Sensor master clock rising edge control. Value = {CLKRS_EXT, CLKRS}.**
1:0	CLKFL_EXT	**Sensor master clock falling edge control. Value = {CLKFL_EXT, CLKFL}.**

A0420820 CAM_PHSCNT2 TG Phase Counter Register 2 00100010

Bit	31	30	29	28	27	26	25	24	23	22	21	20	19	18	17	16
Name	PCEN_1		CLKEN_1	CLKPOL_1			CLKCNT_1								CLKRS_1	
Type	RW		RW	RW			RW								RW	
Reset	0	0	0	0	0	0	0	0	0	0	0	1	0	0	0	0
Bit	15	14	13	12	11	10	9	8	7	6	5	4	3	2	1	0
Name	CLKRS_1						CLKFL_1							TGCLK_CG_EN_1	TGCLK_CG_EN_0	CLKFL_POL_1
Type	RW						RW							RW	RW	RW
Reset	0	0	0	0	0	0	0	0	0	0	0	1	0	0	0	0

Bit(s)	Name	Description
31	PCEN_1	**TG phase counter enable control.**

© 2015 - 2017 MediaTek Inc.
This document contains information that is proprietary to MediaTek Inc. ("MediaTek") and/or its licensor(s).
Any unauthorized use, reproduction or disclosure of this document in whole or in part is strictly prohibited.

		0: Disable. 1: Enable.
29	CLKEN_1	**Enable sensor master clock (mclk) output to sensor.** 0: Disable. 1: Enable.
28	CLKPOL_1	**Sensor master clock polarity control.** 0: The same polarity as source clock. 1: Inverse polarity as source clock.
25:20	CLKCNT_1	**Sensor master clock frequency divider control. Sensor master clock will be TGCLK_SEL/(CLKCNT+1).**
17:12	CLKRS_1	**Sensor master clock rising edge control.**
9:4	CLKFL_1	**Sensor master clock falling edge control.**
2	TGCLK_CG_EN_1	**Sensor master based clock 1 enable.(48 MHz)** 0: Disable clock. 1: Enable clock.
1	TGCLK_CG_EN_0	**Sensor master based clock 0 enable.(104/133 MHz)** 0: Disable clock. 1: Enable clock.
0	CLKFL_POL_1	**Sensor clock divider auxiliary. If CLKCNT is even and is not equal to 0, CLKFL_POL must be 1'b1 to generate half cycle to achieve the target clock rate.**

A0420824 CAM_DCM_CTRL DCM Control Register 00000000

Bit	31	30	29	28	27	26	25	24	23	22	21	20	19	18	17	16
Name																
Type																
Reset	0	0	0	0	0	0	0	0	0	0	0	0	0	0	0	0
Bit	15	14	13	12	11	10	9	8	7	6	5	4	3	2	1	0
Name																DCM_DIS
Type																RW
Reset	0	0	0	0	0	0	0	0	0	0	0	0	0	0	0	0

Bit(s)	Name	Description
0	DCM_DIS	**DCM enabling/disabling setting.** 0: Enable DCM. 1: Disable DCM.

A0420828 CAM_DCM_STATUS DCM Status Register 00000000

Bit	31	30	29	28	27	26	25	24	23	22	21	20	19	18	17	16
Name																
Type																
Reset	0	0	0	0	0	0	0	0	0	0	0	0	0	0	0	0
Bit	15	14	13	12	11	10	9	8	7	6	5	4	3	2	1	0
Name																DCM_STATUS
Type																RO
Reset	0	0	0	0	0	0	0	0	0	0	0	0	0	0	0	0

Bit(s)	Name	Description
0	DCM_STATUS	**DCM status.**

© 2015 - 2017 MediaTek Inc.

This document contains information that is proprietary to MediaTek Inc. (“MediaTek”) and/or its licensor(s).
Any unauthorized use, reproduction or disclosure of this document in whole or in part is strictly prohibited.

26. Serial Camera (SCAM)

26.1. General Description

This module supports both the serial interface and parallel interface sensor. If parallel interface sensor is chosen, SCAM simply bypasses the data, vsync, hsync and then sends to CAMINF. On the other hand, if serial interface sensor is chosen, SCAM decodes the serial data stream and generates vsync, hsync, data and pixel clock for CAMINF.

The polarity of Vsync, Hsync, and pxl_clk generated by SCAM under serial interface mode is fixed. Please refer to for more detail.

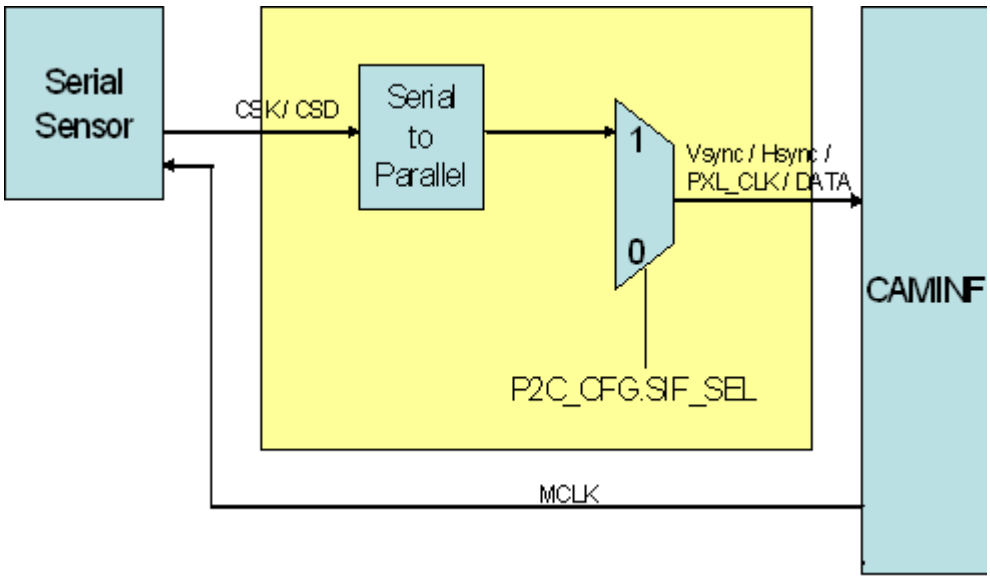

Figure 26-1. SCAM Block Diagram

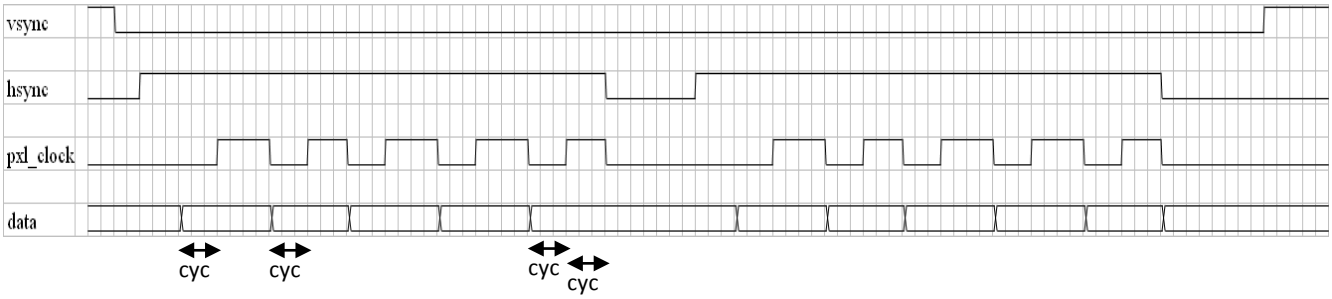

Figure 26-2. Serial Interface Mode. SCAM Output Waveform Example

© 2015 - 2017 MediaTek Inc.

This document contains information that is proprietary to MediaTek Inc. ("MediaTek") and/or its licensor(s).
Any unauthorized use, reproduction or disclosure of this document in whole or in part is strictly prohibited.

26.2. Application Notes

- Parallel interface mode:
  - Only SCAM_CFG.SIF_SEL needs to be programmed.
- Serial interface normal mode:
  - SCAM_CFG and SCAM_SIZE should be set and then programming SCAM_CON.ENA. Interrupt is optional for status monitor and error handling.
  - Debugging information: SCAM_INFO0, SCAM_INFO1, SCAM_INFO4.
- Serial interface debug mode:
  - Set SCAM_CFG.DBG_MD = 1, SCAM_CFG.CYC = 2, SCAM_CFG.SIF_SEL = 1.
  - Set SCAM_SIZE = (image_height<<16) + (image_width+16).
  - Set caminf and MDP size = (image_width+16) x image_height.
  - Set SCAM_CON.ENA = 1.
  - Note:
    - Please do NOT use grab window in caminf or crop function in resizer to crop any pixel.
    - If sensor sends only one frame, we can get the data for one complete image from frame start packet. But there is no MDP interrupt because the data number is smaller.
    - If the sensor sends multiple frames continuously, MDP interrupt would issued after receiving the size we set. However, the frame start packet may be in any position, and it is possible the recorded data is not byte aligned.
    - Only one frame would be dumped out through MDP after set SCAM_CON.ENA = 1.
- Configuration procedure for disable clock.

```
SCAM_CON = SCAM_CON & 0xFFFFFFFE;
      SCAM_CON = SCAM_CON | 0x00010000;
      SCAM_CON = SCAM_CON & 0xFFFEFFFF;
      SCAM_CFG = SCAM_CFG & 0xFFFFDF00;
      SWInt = SCAM_INT & 0x000001FF;
      Disable clock;
```

© 2015 - 2017 MediaTek Inc.

This document contains information that is proprietary to MediaTek Inc. (“MediaTek”) and/or its licensor(s).
Any unauthorized use, reproduction or disclosure of this document in whole or in part is strictly prohibited.

26.3. Register Definition

Address	Name	Width	Register Function
A0430000	SCAM_CFG	32	SCAM Configuration Register The register is for global configuration of SCAM.
A0430004	SCAM_CON	32	SCAM Control Register Reset and enable.
A0430008	SCAM_DDR_CTRL	32	SCAM DDR Control Register The register is for configuration of DDR control in pad2cam.
A043000C	SCAM_INT	32	SCAM Interrupt Register All INT* are still active even if SCAM_CFG.INTEN* is 0.
A0430010	SCAM_SIZE	32	SCAM Size Register The register is for configuration of sensor size.
A0430014	SCAM_TIME_OUT	32	SCAM Time Out Register The register is for configuration of time out.
A0430018	SCAM_LINE_ID_START	32	SCAM Line ID Start Register The register is for configuration of start compared line id.
A0430024	SCAM_INFO_7	32	SCAM Status Register The register shows up the current status of SCAM.
A043002C	SCAM_INFO6	32	SCAM Status Register The register shows up the debug counters.
A0430030	SCAM_INFO0	32	SCAM INFO0 Register The register shows up the packet information from serial sensor.
A0430034	SCAM_INFO1	32	SCAM INFO1 Register The register shows up the packet information from serial sensor and the current status of SCAM.
A0430040	SCAM_INFO4	32	SCAM Status Register The register shows up the debug counters.

All undefined bit fields must be set as the default values.

A0430000 SCAM_CFG SCAM Configuration Register 50000400

Bit	31	30	29	28	27	26	25	24	23	22	21	20	19	18	17	16
Name	DCM_DIS	C_DATA_PACKET_MD		WARN_MASK		CSD_NUM			INTEN9	CAL_CRC_ON	CAL_MD	DBG_MD		LANECON_EN	CON	SIF_SEL
Type	RW	RW		RW		RW			RW	RW	RW	RW		RW	RW	RW
Reset	0	1	0	1	0	0	0	0	0	0	0	0	0	0	0	0
Bit	15	14	13	12	11	10	9	8	7	6	5	4	3	2	1	0
Name		TIME_OUT_CNT_EN	INTEN8	CLK_INV		CYC			INTEN7	INTEN6	INTEN5	INTEN4	INTEN3	INTEN2	INTEN1	INTEN0
Type		RW	RW	RW		RW			RW	RW	RW	RW	RW	RW	RW	RW
Reset	0	0	0	0	0	1	0	0	0	0	0	0	0	0	0	0

Bit(s)	Name	Description
31	DCM_DIS	**DCM enabling/disabling setting.** 0: Enable DCM. 1: Disable DCM.

© 2015 - 2017 MediaTek Inc.
This document contains information that is proprietary to MediaTek Inc. ("MediaTek") and/or its licensor(s).
Any unauthorized use, reproduction or disclosure of this document in whole or in part is strictly prohibited.

30:29	C_DATA_PACKET_MD	**Selection of data packet.** 0: JPEG data packet. 1: RAW8 data packet. 2: YUV422/RGB565 data packet.
28	WARN_MASK	**Warning mask before 1st frame start packet.** 0: All warnings would be recorded. 1: Warnings before 1st frame start packet would NOT be recorded. That is no interrupt and no warning counter increasing.
25:24	CSD_NUM	**Number of CSD channels.** 0: 1 data channel. 1: 2 data channels. 2: 4 data channels. 3: 3 data channels. 4: 6 data channels. others: Reserved.
23	INTEN9	**Interrupt enable of correct data packet. Active at calibration mode.** 0: Disable. 1: Enable.
22	CAL_CRC_ON	**CRC enable at calibration mode.** 0: Disable. 1: Enable.
21	CAL_MD	**Calibration mode enable.** 0: Normal mode/debug mode. 1: Calibration mode.
20	DBG_MD	**Debug mode enable.** 0: Normal mode. 1: Debug mode. CSD is not parsed or decoded, and Raw data is transferred to caminf.
18	LANECON_EN	**Lane conversion. ex. 6 lanes to 3 lanes, 4 lanes to 2 lanes, and 2 lanes to 1 lane.** 0: Disable. 1: Enable.
17	CON	**Continuous mode enable.** 0: Single run. 1: Continuous run.
16	SIF_SEL	**Selection of operation mode of SCAM.** 0: Parallel interface mode. 1: Serial interface mode.
14	TIME_OUT_CNT_EN	**Counter enable of time out.** 0: Disable. 1: Enable.
13	INTEN8	**Interrupt enable of time out.** 0: Disable. 1: Enable.
12	CLK_INV	**Inverse latch for clock from sensor.** 0: Sample data at positive edge. 1: Sample data at negative edge.
10:8	CYC	**Cycle counts for rising of serial interface pixel clock after data is valid. Please refer to .**
7	INTEN7	**Interrupt enable of correct crc.** 0: Disable. 1: Enable.
6	INTEN6	**Interrupt enable of wrong size.** 0: Disable. 1: Enable.
5	INTEN5	**Interrupt enable of wrong data id.** 0: Disable. 1: Enable.
4	INTEN4	**Interrupt enable of wrong line id.** 0: Disable. 1: Enable.

© 2015 - 2017 MediaTek Inc.

This document contains information that is proprietary to MediaTek Inc. (“MediaTek”) and/or its licensor(s).
Any unauthorized use, reproduction or disclosure of this document in whole or in part is strictly prohibited.

3	INTEN3	**Interrupt enable of wrong packet id.** 0: Disable. 1: Enable.
2	INTEN2	**Interrupt enable of wrong sync header.** 0: Disable. 1: Enable.
1	INTEN1	**Interrupt enable of crc error.** 0: Disable. 1: Enable.
0	INTEN0	**Interrupt enable of frame end.** 0: Disable. 1: Enable.

A0430004 SCAM_CON SCAM Control Register 00000000

Bit	31	30	29	28	27	26	25	24	23	22	21	20	19	18	17	16
Name																RST
Type																RW
Reset	0	0	0	0	0	0	0	0	0	0	0	0	0	0	0	0
Bit	15	14	13	12	11	10	9	8	7	6	5	4	3	2	1	0
Name																ENA
Type																RW
Reset	0	0	0	0	0	0	0	0	0	0	0	0	0	0	0	0

Bit(s)	Name	Description
16	RST	**Writing "1" to the register will stop SCAM immediately and keep in reset state. In order to go to normal state, writing "0" to the register bit. Software reset will NOT reset all register setting.** 0: Disable. 1: Enable.
0	ENA	**Writing "1" to the register bit will start the SCAM. Remember to trigger SCAM first before trigger image sensor. Remember to clear RST before set ENA = 1.** 0: Disable. 1: Enable.

A0430008 SCAM_DDR_CTRL SCAM DDR Control Register 00000004

Bit	31	30	29	28	27	26	25	24	23	22	21	20	19	18	17	16
Name			PAD_CSD_NUM							CSD_2_DLY					CSD_1_DLY	
Type			RW							RW					RW	
Reset	0	0	0	0	0	0	0	0	0	0	0	0	0	0	0	0
Bit	15	14	13	12	11	10	9	8	7	6	5	4	3	2	1	0
Name	CSD_1_DLY			CSD_0_DLY					DDR_MODE		CSD_2_SWAP	CSD_1_SWAP	CSD_0_SWAP	CSK_1_INV	CSK_0_INV	CSK_SEL
Type	RW			RW					RW		RW	RW	RW	RW	RW	RW
Reset	0	0	0	0	0	0	0	0	0	0	0	0	0	1	0	0

Bit(s)	Name	Description
29:28	PAD_CSD_NUM	**Number of pad CSD channels.** 0: 1 data channel. 1: 2 data channels. 2: 3 data channels. 3: Reserved.
22:18	CSD_2_DLY	**Delay length of CSD2. (unit: ns)**
17:13	CSD_1_DLY	**Delay length of CSD1. (unit: ns)**

© 2015 - 2017 MediaTek Inc.
This document contains information that is proprietary to MediaTek Inc. ("MediaTek") and/or its licensor(s).
Any unauthorized use, reproduction or disclosure of this document in whole or in part is strictly prohibited.

12:8	CSD_0_DLY	**Delay length of CSD0. (unit: ns)**
7	DDR_MODE	**Receive data by DDR function.** 0: Normal mode. 1: DDR mode.
5	CSD_2_SWAP	**Swap the received data from CSD2.** 0: No swap. 1: Swap.
4	CSD_1_SWAP	**Swap the received data from CSD1.** 0: No swap. 1: Swap.
3	CSD_0_SWAP	**Swap the received data from CSD0.** 0: No swap. 1: Swap.
2	CSK_1_INV	**Control csk 1 inverse.** 0: No clock inverse. 1: Clock inverse.
1	CSK_0_INV	**Control csk 0 inverse.** 0: No clock inverse. 1: Clock inverse.
0	CSK_SEL	**CSK selection. If sensor does not send CSK, set this field to 1.** 0: CSK from pad. 1: Internal CSK.

A043000C SCAM_INT SCAM Interrupt Register 00000000

Bit	31	30	29	28	27	26	25	24	23	22	21	20	19	18	17	16
Name																
Type																
Reset	0	0	0	0	0	0	0	0	0	0	0	0	0	0	0	0
Bit	15	14	13	12	11	10	9	8	7	6	5	4	3	2	1	0
Name							INT9	INT8	INT7	INT6	INT5	INT4	INT3	INT2	INT1	INT0
Type							RC	RC	RC	RC	RC	RC	RC	RC	RC	RC
Reset	0	0	0	0	0	0	0	0	0	0	0	0	0	0	0	0

Bit(s)	Name	Description
9	INT9	**Interrupt of correct data packet. Active at calibration mode.**
8	INT8	**Interrupt of time out.**
7	INT7	**Interrupt of correct crc.**
6	INT6	**Interrupt of wrong size.**
5	INT5	**Interrupt of wrong data id.**
4	INT4	**Interrupt of wrong line id.**
3	INT3	**Interrupt of wrong packet id.**
2	INT2	**Interrupt of wrong sync header.**
1	INT1	**Interrupt of crc error.**
0	INT0	**Interrupt of frame end.**

A0430010 SCAM_SIZE SCAM Size Register 00000000

Bit	31	30	29	28	27	26	25	24	23	22	21	20	19	18	17	16
Name						HEIGHT										
Type						RW										
Reset	0	0	0	0	0	0	0	0	0	0	0	0	0	0	0	0

© 2015 - 2017 MediaTek Inc.

This document contains information that is proprietary to MediaTek Inc. ("MediaTek") and/or its licensor(s).
Any unauthorized use, reproduction or disclosure of this document in whole or in part is strictly prohibited.

Bit	15	14	13	12	11	10	9	8	7	6	5	4	3	2	1	0
Name						WIDTH										
Type						RW										
Reset	0	0	0	0	0	0	0	0	0	0	0	0	0	0	0	0

Bit(s)	Name	Description
26:16	HEIGHT	**Height of picture. This setting must be set the same as height information in frame start packet.**
10:0	WIDTH	**Width of picture. This setting must be set the same as width information in frame start packet.**

A0430014 SCAM_TIME_OUT SCAM Time Out Register FFFFFFFF

Bit	31	30	29	28	27	26	25	24	23	22	21	20	19	18	17	16
Name	TIME_OUT_VALUE															
Type	RW															
Reset	1	1	1	1	1	1	1	1	1	1	1	1	1	1	1	1
Bit	15	14	13	12	11	10	9	8	7	6	5	4	3	2	1	0
Name	TIME_OUT_VALUE															
Type	RW															
Reset	1	1	1	1	1	1	1	1	1	1	1	1	1	1	1	1

Bit(s)	Name	Description
31:0	TIME_OUT_VALUE	**Time out value of scam.**

A0430018 SCAM_LINE_ID_START SCAM Line ID Start Register 00000000

Bit	31	30	29	28	27	26	25	24	23	22	21	20	19	18	17	16
Name																
Type																
Reset	0	0	0	0	0	0	0	0	0	0	0	0	0	0	0	0
Bit	15	14	13	12	11	10	9	8	7	6	5	4	3	2	1	0
Name						LINE_ID_START										
Type						RW										
Reset	0	0	0	0	0	0	0	0	0	0	0	0	0	0	0	0

Bit(s)	Name	Description
10:0	LINE_ID_START	**Start golden line id for comparison.**

A0430024 SCAM_INFO_7 SCAM Status Register 00000000

Bit	31	30	29	28	27	26	25	24	23	22	21	20	19	18	17	16
Name																
Type																
Reset	0	0	0	0	0	0	0	0	0	0	0	0	0	0	0	0
Bit	15	14	13	12	11	10	9	8	7	6	5	4	3	2	1	0
Name																DCM_STATUS
Type																RO
Reset	0	0	0	0	0	0	0	0	0	0	0	0	0	0	0	0

Bit(s)	Name	Description
0	DCM_STATUS	**DCM status.**

© 2015 - 2017 MediaTek Inc.

This document contains information that is proprietary to MediaTek Inc. ("MediaTek") and/or its licensor(s).
Any unauthorized use, reproduction or disclosure of this document in whole or in part is strictly prohibited.

A043002C SCAM_INFO6 SCAM Status Register 00000000

Bit	31	30	29	28	27	26	25	24	23	22	21	20	19	18	17	16
Name																
Type																
Reset	0	0	0	0	0	0	0	0	0	0	0	0	0	0	0	0
Bit	15	14	13	12	11	10	9	8	7	6	5	4	3	2	1	0
Name									C_DATA_PACKET_CNT				W_TIME_OUT_CNT			
Type									W1C				W1C			
Reset	0	0	0	0	0	0	0	0	0	0	0	0	0	0	0	0

Bit(s)	Name	Description
7:4	C_DATA_PACKET_CNT	**Counter of correct data packet, up to 15. Clear by SW reset or write any value to clear all counters. Active at calibration mode.**
3:0	W_TIME_OUT_CNT	**Counter of time out, up to 15. Clear by SW reset or write any value to clear all counters.**

A0430030 SCAM_INFO0 SCAM INFO0 Register 00000000

Bit	31	30	29	28	27	26	25	24	23	22	21	20	19	18	17	16
Name	PACKET_SIZE															
Type	RO															
Reset	0	0	0	0	0	0	0	0	0	0	0	0	0	0	0	0
Bit	15	14	13	12	11	10	9	8	7	6	5	4	3	2	1	0
Name	LINE_ID															
Type	RO															
Reset	0	0	0	0	0	0	0	0	0	0	0	0	0	0	0	0

Bit(s)	Name	Description
31:16	PACKET_SIZE	**Packet information size of the most recent data packet.**
15:0	LINE_ID	**Line ID information of the most recent line start packet.**

A0430034 SCAM_INFO1 SCAM INFO1 Register 00000001

Bit	31	30	29	28	27	26	25	24	23	22	21	20	19	18	17	16
Name					DATA_CNT											
Type					RO											
Reset	0	0	0	0	0	0	0	0	0	0	0	0	0	0	0	0
Bit	15	14	13	12	11	10	9	8	7	6	5	4	3	2	1	0
Name	ACTIVE	CRC_ON	DATA_ID													
Type	RO	RO	RO													
Reset	0	0	0	0	0	0	0	0	0	0	0	0	0	0	0	1

Bit(s)	Name	Description
27:16	DATA_CNT	**Counter for current packet.**
15	ACTIVE	**Frame start packet is received and frame end packet is not received yet.**
14	CRC_ON	**Crc_on information of the most recent frame start packet.**
13:8	DATA_ID	**Data ID information of the most recent frame start packet.**

© 2015 - 2017 MediaTek Inc.

This document contains information that is proprietary to MediaTek Inc. ("MediaTek") and/or its licensor(s).
Any unauthorized use, reproduction or disclosure of this document in whole or in part is strictly prohibited.

A0430040 SCAM_INFO4 SCAM Status Register 00000000

Bit	31	30	29	28	27	26	25	24	23	22	21	20	19	18	17	16
Name	C_CRC_CNT				W_SIZE_CNT				W_DID_CNT				W_LID_CNT			
Type	W1C				W1C				W1C				W1C			
Reset	0	0	0	0	0	0	0	0	0	0	0	0	0	0	0	0
Bit	15	14	13	12	11	10	9	8	7	6	5	4	3	2	1	0
Name	W_PID_CNT				W_SYNC_CNT				W_CRC_CNT				FEND_CNT			
Type	W1C				W1C				W1C				W1C			
Reset	0	0	0	0	0	0	0	0	0	0	0	0	0	0	0	0

Bit(s)	Name	Description
31:28	C_CRC_CNT	**Counter of correct crc, up to 15. Clear by SW reset or write any value to clear all counters.**
27:24	W_SIZE_CNT	**Counter of wrong size, up to 15. Clear by SW reset or write any value to clear all counters.**
23:20	W_DID_CNT	**Counter of wrong data id, up to 15. Clear by SW reset or write any value to clear all counters.**
19:16	W_LID_CNT	**Counter of wrong line id, up to 15. Clear by SW reset or write any value to clear all counters.**
15:12	W_PID_CNT	**Counter of wrong packet id, up to 15. Clear by SW reset or write any value to clear all counters.**
11:8	W_SYNC_CNT	**Counter of wrong sync header, up to 15. Clear by SW reset or write any value to all counters.**
7:4	W_CRC_CNT	**Counter of crc error, up to 15. Clear by SW reset or write any value to all counters.**
3:0	FEND_CNT	**Counter of frame end, free running counter. Clear by SW reset or write any value to all counters.**

© 2015 - 2017 MediaTek Inc.

This document contains information that is proprietary to MediaTek Inc. ("MediaTek") and/or its licensor(s).
Any unauthorized use, reproduction or disclosure of this document in whole or in part is strictly prohibited.

27. Image Resizer

27.1. General Description

This block provides the image resizing function for image and video capturing scenarios. It receives image data from the Caminf module or from memory input, performs the image resizing function and outputs to the ROTATOR. shows the block diagram. The resizer is composed of horizontal and vertical resizing blocks. It can scale up or down the input image by any ratio. It also supports tile processing which can combines tiles into a full frame in memory-input mode. The maximum size of input images is limited to 2047x2047 and maximum size of output images is limited to 2047x2047.

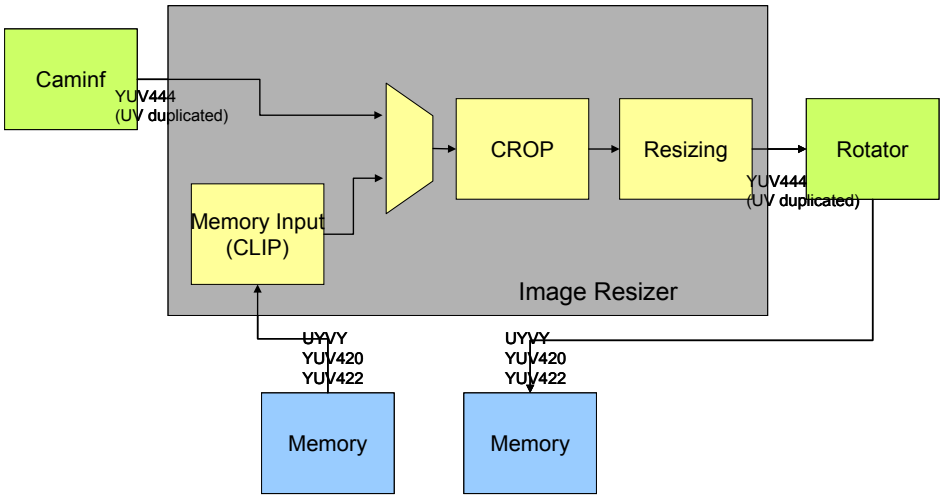

Figure 27-1. Image Resizer Overview

27.2. Application Notes

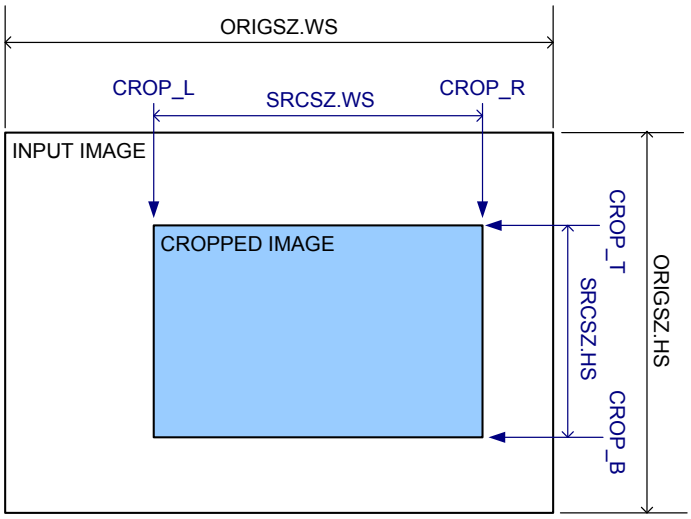

There is a cropping example. Assuming an uncropped image with size = (640, 480), if the size of the cropped frame is (320, 240) and the cropped region is the center of input frame. Then the setting will be CROP_L = 160, CROP_R = 479, CROP_T = 120, CROP_B = 359, and SRCSZ_WS = 320, SRCSZ_HS = 240.

© 2015 - 2017 MediaTek Inc.

This document contains information that is proprietary to MediaTek Inc. (“MediaTek”) and/or its licensor(s).
Any unauthorized use, reproduction or disclosure of this document in whole or in part is strictly prohibited.

Note that there are two kinds of registers, registers related to cropping function and the rest registers, including ratio, and size, etc. Two kinds of double buffered registers have two separated updating time as described in the . In the normal case, registers related to cropping function will be updated at B if the following criterion is satisfied:

1. LOCK bit is not '1' at B.

The rest registers will be updated at C if the following criteria are satisfied:

1. LOCK bit is not '1' at B.
2. LOCK bit is not changed from B to C.

To make sure HW double buffered registers behave by this rule, we can guarantee that the cropping registers and the rest registers take effect at the same frame. However, from input frame #0, if after interrupt is asserted at A and FW cannot finish registers programming before B, then all the registers will take function at frame #2.

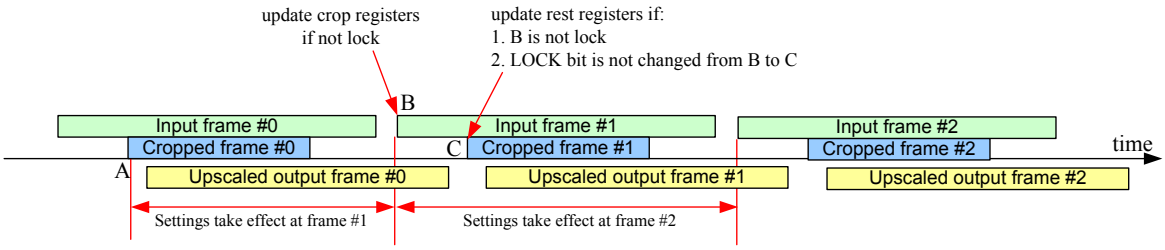

Figure 27-2. Resizer double buffered registers updating and taking effect timing chart

As shown in , in cropping mode, the FSTINT is asserted at the beginning of cropped frame. The FEDINT is asserted at the end of output frame. There are three independent busy status bits for three different frames, input frame, cropping frame and output frame.

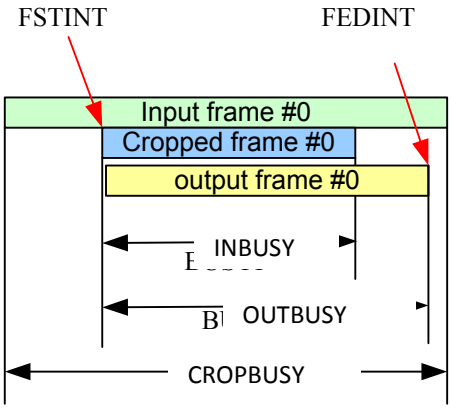

Figure 27-3. Resizer interrupt and busy asserting timing chart

- Configuration procedure when source is cam

```
RESZ_CFG = 0x10 (continuous), 0x0 (single run);
RESZ_SRCSZ1 = source image size;
```


This document contains information that is proprietary to MediaTek Inc. ("MediaTek") and/or its licensor(s).
Any unauthorized use, reproduction or disclosure of this document in whole or in part is strictly prohibited.

```
RESZ_TARSZ1 = target image size;
RESZ_HRATIO1 = horizontal ratio;
RESZ_VRATIO1 = vertical ratio;
RESZ_HRES1 = horizontal residual;
RESZ_VRES1 = vertical residual;
RESZ_FRCFG = working memory size, interrupt enable;
RESZ_CON = 0x1;
```

- Configuration procedure when source is memory (frame mode)

```
RESZ_CFG = 0x1 or 0x2 or 0x3 (single run);
RESZ_SMBASE_Y = source memory for Y base address;
RESZ_SMBASE_U = source memory for U base address;
RESZ_SMBASE_V = source memory for V base address;
RESZ_SRCSZ1 = source image size;
RESZ_TARSZ1 = target image size;
RESZ_HRATIO1 = horizontal ratio;
RESZ_VRATIO1 = vertical ratio;
RESZ_HRES1 = horizontal residual;
RESZ_VRES1 = vertical residual;
RESZ_FRCFG = working memory size, interrupt enable;
RESZ_CON = 0x1;
```

- Configuration procedure when source is memory (tile mode)

```
RESZ_CFG = 0x10001 or 0x10002 or 0x10003 (single run);
RESZ_SMBASE_Y = source tile memory for Y base address;
RESZ_SMBASE_U = source tile memory for U base address;
RESZ_SMBASE_V = source tile memory for V base address;
RESZ_SRCSZ1 = source tile size;
RESZ_TARSZ1 = target tile size;
RESZ_HRATIO1 = horizontal ratio;
RESZ_VRATIO1 = vertical ratio;
RESZ_HRES1 = horizontal residual;
RESZ_VRES1 = vertical residual;
Setup tile parameters according tile formula
RESZ_FRCFG = working memory size, interrupt enable;
RESZ_CON = 0x1;
```

- Configuration procedure for disable clock.

```
RESZ_CON = 0x0;
RESZ_CON = 0X10000;
while ((RESZ_CON&0x10000) == 1) ;
RESZ_FRCFG = RESZ_FRCFG & 0xFFFF13FF;
SWInt = RESZ_INT & 0x0000003F;
Disable clock;
```

27.3. Register Definition

Address	Name	Width	Register Function

© 2015 - 2017 MediaTek Inc.

This document contains information that is proprietary to MediaTek Inc. (“MediaTek”) and/or its licensor(s).
Any unauthorized use, reproduction or disclosure of this document in whole or in part is strictly prohibited.

Address	Name	Width	Register Function
A0410000	RESZ_CFG	32	Image Resizer Configuration Register The register is for global configuration of Image Resizer.
A0410004	RESZ_CON	32	Image Resizer Control Register The register is for global control of Image Resizer. Furthermore, software reset will not reset all register setting. Remember trigger Image Resizer first before trigger image sources to Image Resizer.
A0410008	RESZ_STA	32	Image Resizer Status Register The register indicates global status of Image Resizer.
A041000C	RESZ_INT	32	Image Resizer Interrupt Register The register shows up the interrupt status of resizer.
A0410010	RESZ_SRCSZ1	32	Image Resizer Source Image Size Register 1 The register specifies the size of source image. The allowable maximum size is 2047x2047.
A0410014	RESZ_TARSZ1	32	Image Resizer Target Image Size Register 1 The register specifies the size of target image. The allowable maximum size is 960x2047 with resizing and 2047x2047 without resizing. However, it is suggested to limit WT <= 480 when SRC is CAM and with resizing.
A0410018	RESZ_HRATIO1	32	Image Resizer Horizontal Ratio Register 1 The register specifies horizontal resizing ratio.
A041001C	RESZ_VRATIO1	32	Image Resizer Vertical Ratio Register 1 The register specifies vertical resizing ratio.
A0410020	RESZ_HRES1	32	Image Resizer Horizontal Residual Register 1 The register specifies horizontal residual. It is obtained by RESZ_SRCSZ1.WS % RESZ_TARSZ1.WT.
A0410024	RESZ_VRES1	32	Image Resizer Vertical Residual Register 1 The register specifies vertical residual. It is obtained by RESZ_SRCSZ1.HS % RESZ_TARSZ1.HT.
A041002C	RESZ_LOCK	32	Image Resizer LOCK Register This register specifies the lock register. Once this bit is programmed to be '1', Resizer stops updating double buffered registers at Vsync. The function of lock register is to prevent Resizer updating only partial parameters when firmware programs registers near input Vsync. Set to 1 before changing size related registers, and set to 0 after all size related registers are programmed.
A0410030	RESZ_ORIGSZ1	32	Image Resizer Crop Original Size Register 1 These registers are only used when CROP_EN = '1'. This field specifies original size before image cropping.
A0410034	RESZ_CROPLR1	32	Image Resizer Crop Left Right Register 1 These registers are only used when CROP_EN = '1'. This field specifies the horizontal start and end position index for image cropping. Please note that these indexes are defined as the following illustration. For an uncropped image, the index of start point is 0 and the index of end point is (ORIGSZ_WS-1). The width cropped frame is therefore defined as (CROP_R - CROP_L+1).
A0410038	RESZ_CROPTB1	32	Image Resizer Crop Top Bottom Register 1 These registers are only used when CROP_EN = '1'. This field specifies the vertical start and end position index for image cropping. Please note that these indexes are defined as the following illustration. For an uncropped image, the index of start point is 0 and the index of end point is (ORIGSZ_HS-1). The height cropped frame is therefore defined as (CROP_B - CROP_T+1).
A0410040	RESZ_FRCFG	32	Image Resizer Fine Resizing Configuration Register The register specifies various setting of control for fine resizing, including of horizontal and vertical resizing. Note that all parameters must be set before

© 2015 - 2017 MediaTek Inc.

This document contains information that is proprietary to MediaTek Inc. (“MediaTek”) and/or its licensor(s).
Any unauthorized use, reproduction or disclosure of this document in whole or in part is strictly prohibited.

Address	Name	Width	Register Function
			horizontal and vertical resizing proceeds.
A0410090	RESZ_DBGCFG	32	Image Resizer Debug Configuration Register The register is used to help debug.
A04100B0	RESZ_INFO0	32	Image Resizer Information Register 0
A04100B4	RESZ_INFO1	32	Image Resizer Information Register 1
A04100DC	RESZ_SMBASE_Y	32	Image Resizer Y-Component Source Memory Base Address Register The register specifies the base address of memory input for Y-component or UYVY format. It's only useful in Memory input mode. It should be 4 bytes aligned without CLIP_EN. It should be format aligned with CLIP_EN. That is 4 bytes for UYVY format and 2 bytes for YUV420 and YUV422 format. However, the base address before clipping must be 4 bytes aligned.
A04100E0	RESZ_SMBASE_U	32	Image Resizer U-Component Source Memory Base Address Register The register specifies the base address of memory input for U-component. It's only useful in Memory input mode. It should be 4 bytes aligned without CLIP_EN. It should be format aligned with CLIP_EN. That is 1 byte. However, the base address before clipping must be 4 bytes aligned.
A04100E4	RESZ_SMBASE_V	32	Image Resizer V-Component Source Memory Base Address Register The register specifies the base address of memory input for V-component. It's only useful in Memory input mode. It should be 4 bytes aligned without CLIP_EN. It should be format aligned with CLIP_EN. That is 1 byte. However, the base address before clipping must be 4 bytes aligned.
A04100F0	RESZ_GMCCON	32	Image Resizer GMC Control Register
A04100FC	RESZ_CLIP	32	Image Resizer CLIP Register
A0410100	RESZ_TILE_CFG	32	Image Resizer Tile Configuration Register Configuration setting of tile-based resizer.
A0410104	RESZ_TILE_START_POS_X1	32	Image Resizer Tile Start Position X Register 1 Start setting of tile-based resizer.
A041010C	RESZ_TILE_START_POS_Y1	32	Image Resizer Tile Start Position Y Register 1 Start setting of tile-based resizer.
A0410114	RESZ_BI_TRUNC_ERR_COMP1	32	Image Resizer Bilinear Truncation Error Compensation Register 1 Bilinear setting of tile-based resizer.
A0410118	RESZ_BI_INIT_RESID1	32	Image Resizer Bilinear Initial Residual Register 1 Bilinear setting of tile-based resizer.

All undefined bit fields must be set as the default values.

A0410000 RESZ_CFG **Image Resizer Configuration Register** **00000000**

Bit	31	30	29	28	27	26	25	24	23	22	21	20	19	18	17	16

© 2015 - 2017 MediaTek Inc.
This document contains information that is proprietary to MediaTek Inc. ("MediaTek") and/or its licensor(s).
Any unauthorized use, reproduction or disclosure of this document in whole or in part is strictly prohibited.

Name																MODE1
Type																RW
Reset	0	0	0	0	0	0	0	0	0	0	0	0	0	0	0	0
Bit	15	14	13	12	11	10	9	8	7	6	5	4	3	2	1	0
Name								VSRSTEN2	VSRSTEN1	VSRSTEN0	DCM_DIS	PCON			SRC1	
Type								RW	RW	RW	RW	RW			RW	
Reset	0	0	0	0	0	0	0	0	0	0	0	0	0	0	0	0

Bit(s)	Name	Description
16	MODE1	**Mode selection of 1st pass of resizer.** 0: Frame mode. 1: Tile mode.
8	VSRSTEN2	**Resizer auto reset when SRC1 is camera and pixel drop is detected.** 0: Disable. 1: Enable.
7	VSRSTEN1	**Resizer auto reset when SRC1 is camera and new frame comes and previous input is complete but output not complete.** 0: Disable. (skip current frame) 1: Enable. (Give up previous frame)
6	VSRSTEN0	**Resizer auto reset when SRC1 is camera and new frame comes.** 0: Disable. 1: Enable.
5	DCM_DIS	**DCM enabling/disabling setting.** 0: Enable DCM. 1: Disable DCM.
4	PCON	**The register bit specifies if resizing continues whenever an image finishes processing. Once continuous run for pixel-based resizing is enabled and pixel-based resizing is running, the only way to stop is to reset resizer. If to stop immediately is desired, reset resizer directly. If the last image is desired, set the register bit to '0' first. Then wait until image resizer is not busy again. Finally reset image resizer.** 0: Single run. 1: Continuous run.
1:0	SRC1	**The register bit specified the input source of 1st pass of resizer.** 0: Camera input. 1: Memory input. Packet UYVY format. 2: Memory input. Planar YUV420 format. 3: Memory input. Planar YUV422 format.

A0410004 RESZ_CON **Image Resizer Control Register** **00000000**

Bit	31	30	29	28	27	26	25	24	23	22	21	20	19	18	17	16
Name																RST
Type																RW
Reset	0	0	0	0	0	0	0	0	0	0	0	0	0	0	0	0
Bit	15	14	13	12	11	10	9	8	7	6	5	4	3	2	1	0
Name																ENA
Type																RW
Reset	0	0	0	0	0	0	0	0	0	0	0	0	0	0	0	0

Bit(s)	Name	Description
16	RST	Writing '1' to the register will cause resizing to stop. Resizer itself would clear this bit to 0 when it is ready to be enabled. When this bit is 1, do not enable resizer.
0	ENA	**Writing '1' to the register bit to enable resizer.**

© 2015 - 2017 MediaTek Inc.
This document contains information that is proprietary to MediaTek Inc. ("MediaTek") and/or its licensor(s).
Any unauthorized use, reproduction or disclosure of this document in whole or in part is strictly prohibited.

A0410008 RESZ_STA **Image Resizer Status Register** **00000000**

Bit	31	30	29	28	27	26	25	24	23	22	21	20	19	18	17	16
Name																DCM_STATUS
Type																RO
Reset	0	0	0	0	0	0	0	0	0	0	0	0	0	0	0	0
Bit	15	14	13	12	11	10	9	8	7	6	5	4	3	2	1	0
Name		ERR5	ERR4	ERR3		ERR2	ERR1	ERR0				CROPBUSY		INBUSY	MEMINBUSY	OUTBUSY
Type		W1C	W1C	W1C		W1C	W1C	W1C				RO		RO	RO	RO
Reset	0	0	0	0	0	0	0	0	0	0	0	0	0	0	0	0

Bit(s)	Name	Description
16	DCM_STATUS	**DCM status.**
14	ERR5	**Error status. Input pixel is not enough when crop is enabled. Write this bit to 1 or reset resizer to clear.**
13	ERR4	**Error status. Drop frame due to LOCK is changed between start point of original image and start point of cropped image. Write this bit to 1 or reset resizer to clear.**
12	ERR3	**Error status. Drop frame due to LOCK when vsync comes. Write this bit to 1 or reset resizer to clear.**
10	ERR2	**Error status. Input complete but output not complete when new frame comes. Write this bit to 1 or reset resizer to clear.**
9	ERR1	**Error status. Input pixel is not enough. Write this bit to 1 or reset resizer to clear.**
8	ERR0	**Error status. Pixel over run (Camera request but resizer not ack). Write this bit to 1 or reset resizer to clear.**
4	CROPBUSY	**Cropping busy status.**
2	INBUSY	**Input busy status.**
1	MEMINBUSY	**Memory input busy status.**
0	OUTBUSY	**Output busy status.**

A041000C RESZ_INT **Image Resizer Interrupt Register** **00000000**

Bit	31	30	29	28	27	26	25	24	23	22	21	20	19	18	17	16
Name																
Type																
Reset	0	0	0	0	0	0	0	0	0	0	0	0	0	0	0	0
Bit	15	14	13	12	11	10	9	8	7	6	5	4	3	2	1	0
Name											LCKDRPINT	MININT	PXDINT		FSTART1INT	FENDINT
Type											RC	RC	RC		RC	RC
Reset	0	0	0	0	0	0	0	0	0	0	0	0	0	0	0	0

Bit(s)	Name	Description
5	LCKDRPINT	**Interrupt for drop frame for lock occurs. No matter the register bit RESZ_FRCFG.LCKDRPINTEN is enabled or not, the register bit will be active whenever drop frame for lock occurs. It could be as software interrupt by**

This document contains information that is proprietary to MediaTek Inc. ("MediaTek") and/or its licensor(s).
Any unauthorized use, reproduction or disclosure of this document in whole or in part is strictly prohibited.

		polling the register bit. Clear it by reading the register.
4	MININT	Interrupt for memory input. No matter the register bit RESZ_FRCFG.MININTEN is enabled or not, the register bit will be active whenever memory input is done. It could be as software interrupt by polling the register bit. Clear it by reading the register.
3	PXDINT	Interrupt for pixel drop. No matter the register bit RESZ_FRCFG.PXDINTEN is enabled or not, the register bit will be active whenever pixel drop occurs. It could be as software interrupt by polling the register bit. Clear it by reading the register. Useful for error detection.
1	FSTART1INT	Interrupt for frame start of 1st pass. No matter the register bit RESZ_FRCFG.FSTART1INTEN is enabled or not, the register bit will be active whenever a new frame of 1st pass arrives. It could be as software interrupt by polling the register bit. Clear it by reading the register. Useful for digital zooming.
0	FENDINT	Interrupt for frame end. No matter the register bit RESZ_FRCFG.FENDINTEN is enabled or not, the register bit will be active whenever whole image is done. It could be as software interrupt by polling the register bit. Clear it by reading the register.

A0410010 RESZ_SRCSZ1 Image Resizer Source Image Size Register 1 00000000

Bit	31	30	29	28	27	26	25	24	23	22	21	20	19	18	17	16
Name						HS										
Type						RW										
Reset	0	0	0	0	0	0	0	0	0	0	0	0	0	0	0	0
Bit	15	14	13	12	11	10	9	8	7	6	5	4	3	2	1	0
Name						WS										
Type						RW										
Reset	0	0	0	0	0	0	0	0	0	0	0	0	0	0	0	0

Bit(s)	Name	Description
26:16	HS	The register field specifies the height of source image.
10:0	WS	The register field specifies the width of source image.

Note: WS and HS must be format aligned (RESZ_CROPLR1.CROP_EN = 0).

src	format	HS	WS
caminf	YUV444	Multiples of 1	Multiples of 1
memory	YUV420	Multiples of 2	Multiples of 2
	YUV422	Multiples of 1	Multiples of 2
	UYVY	Multiples of 1	Multiples of 2

A0410014 RESZ_TARSZ1 Image Resizer Target Image Size Register 1 00000000

Bit	31	30	29	28	27	26	25	24	23	22	21	20	19	18	17	16
Name						HT										
Type						RW										
Reset	0	0	0	0	0	0	0	0	0	0	0	0	0	0	0	0
Bit	15	14	13	12	11	10	9	8	7	6	5	4	3	2	1	0
Name						WT										
Type						RW										
Reset	0	0	0	0	0	0	0	0	0	0	0	0	0	0	0	0

Bit(s)	Name	Description
26:16	HT	The register field specifies the height of target image.
10:0	WT	The register field specifies the width of target image.

© 2015 - 2017 MediaTek Inc.
This document contains information that is proprietary to MediaTek Inc. ("MediaTek") and/or its licensor(s).
Any unauthorized use, reproduction or disclosure of this document in whole or in part is strictly prohibited.

A0410018 RESZ_HRATIO1 **Image Resizer Horizontal Ratio Register 1** **00000000**

Bit	31	30	29	28	27	26	25	24	23	22	21	20	19	18	17	16
Name	RATIO[31:16]															
Type	RW															
Reset	0	0	0	0	0	0	0	0	0	0	0	0	0	0	0	0
Bit	15	14	13	12	11	10	9	8	7	6	5	4	3	2	1	0
Name	RATIO[15:0]															
Type	RW															
Reset	0	0	0	0	0	0	0	0	0	0	0	0	0	0	0	0

Bit(s)	Name	Description
31:0	RATIO	Ratio = (RESZ_TARSZ.WT < RESZ_SRCSZ.WS) ? (RESZ_TARSZ.WT -1) * 2^{20} / (RESZ_SRCSZ.WS -1) : (RESZ_SRCSZ.WS) * 2^{20} / RESZ_TARSZ.WT

A041001C RESZ_VRATIO1 **Image Resizer Vertical Ratio Register 1** **00000000**

Bit	31	30	29	28	27	26	25	24	23	22	21	20	19	18	17	16
Name	RATIO[31:16]															
Type	RW															
Reset	0	0	0	0	0	0	0	0	0	0	0	0	0	0	0	0
Bit	15	14	13	12	11	10	9	8	7	6	5	4	3	2	1	0
Name	RATIO[15:0]															
Type	RW															
Reset	0	0	0	0	0	0	0	0	0	0	0	0	0	0	0	0

Bit(s)	Name	Description
31:0	RATIO	Ratio = (RESZ_TARSZ.HT < RESZ_SRCSZ.HS) ? (RESZ_TARSZ.HT -1) * 2^{20} / (RESZ_SRCSZ.HS -1) : (RESZ_SRCSZ.HS) * 2^{20} / RESZ_TARSZ.HT

A0410020 RESZ_HRES1 **Image Resizer Horizontal Residual Register 1** **00000000**

Bit	31	30	29	28	27	26	25	24	23	22	21	20	19	18	17	16
Name																
Type																
Reset	0	0	0	0	0	0	0	0	0	0	0	0	0	0	0	0
Bit	15	14	13	12	11	10	9	8	7	6	5	4	3	2	1	0
Name					RESIDUAL											
Type					RW											
Reset	0	0	0	0	0	0	0	0	0	0	0	0	0	0	0	0

Bit(s)	Name	Description
11:0	RESIDUAL	Residual = RESZ_SRCSZ1.WS % RESZ_TARSZ1.WT

A0410024 RESZ_VRES1 **Image Resizer Vertical Residual Register 1** **00000000**

Bit	31	30	29	28	27	26	25	24	23	22	21	20	19	18	17	16
Name																
Type																

© 2015 - 2017 MediaTek Inc.

This document contains information that is proprietary to MediaTek Inc. ("MediaTek") and/or its licensor(s).
Any unauthorized use, reproduction or disclosure of this document in whole or in part is strictly prohibited.

Reset	0	0	0	0	0	0	0	0	0	0	0	0	0	0	0	0
Bit	15	14	13	12	11	10	9	8	7	6	5	4	3	2	1	0
Name					**RESIDUAL**											
Type					RW											
Reset	0	0	0	0	0	0	0	0	0	0	0	0	0	0	0	0

Bit(s)	Name	Description
11:0	RESIDUAL	Residual = RESZ_SRCSZ1.HS % RESZ_TARSZ1.HT

A041002C RESZ_LOCK Image Resizer LOCK Register 00000000

Bit	31	30	29	28	27	26	25	24	23	22	21	20	19	18	17	16
Name																
Type																
Reset	0	0	0	0	0	0	0	0	0	0	0	0	0	0	0	0
Bit	15	14	13	12	11	10	9	8	7	6	5	4	3	2	1	0
Name																**LOCK**
Type																RW
Reset	0	0	0	0	0	0	0	0	0	0	0	0	0	0	0	0

Bit(s)	Name	Description
0	LOCK	**Writing '1' to the register bit prevents updating double buffered registers.**

Note: If lock is set to 1, and vsync comes, the frame will be dropped because the setting is not reliable. So please keep the locked region as short as possible. LCKDRP interrupt can be used to detect this event.

A0410030 RESZ_ORIGSZ1 Image Resizer Crop Original Size Register 1 00000000

Bit	31	30	29	28	27	26	25	24	23	22	21	20	19	18	17	16
Name						**ORIGSZ_HS**										
Type						RW										
Reset	0	0	0	0	0	0	0	0	0	0	0	0	0	0	0	0
Bit	15	14	13	12	11	10	9	8	7	6	5	4	3	2	1	0
Name						**ORIGSZ_WS**										
Type						RW										
Reset	0	0	0	0	0	0	0	0	0	0	0	0	0	0	0	0

Bit(s)	Name	Description
26:16	ORIGSZ_HS	**Resizer input image height before cropping for pass 1.**
10:0	ORIGSZ_WS	**Resizer input image width before cropping for pass 1.**

Note: If CROP_EN = 1 and SRC is memory, ORIGSZ_WS and ORIGSZ_HS must be format aligned.

src	format	ORIGSZ_HS	ORIGSZ_WS
caminf	YUV444	Multiples of 1	Multiples of 1
memory	YUV420	Multiples of 2	Multiples of 2
	YUV422	Multiples of 1	Multiples of 2
	UYVY	Multiples of 1	Multiples of 2

A0410034 RESZ_CROPLR1 Image Resizer Crop Left Right Register 1 00000000

Bit	31	30	29	28	27	26	25	24	23	22	21	20	19	18	17	16
Name	**CROP_EN**					**CROP_L**										
Type	RW					RW										
Reset	0	0	0	0	0	0	0	0	0	0	0	0	0	0	0	0

© 2015 - 2017 MediaTek Inc.
This document contains information that is proprietary to MediaTek Inc. ("MediaTek") and/or its licensor(s).
Any unauthorized use, reproduction or disclosure of this document in whole or in part is strictly prohibited.

Bit	15	14	13	12	11	10	9	8	7	6	5	4	3	2	1	0
Name						CROP_R										
Type						RW										
Reset	0	0	0	0	0	0	0	0	0	0	0	0	0	0	0	0

Bit(s)	Name	Description
31	CROP_EN	**Crop enable for pass 1.**
26:16	CROP_L	**Horizontal cropping start/left position index for pass 1.**
10:0	CROP_R	**Horizontal cropping end/right position index for pass 1.**

A0410038 RESZ_CROPTB1 **Image Resizer Crop Top Bottom Register 1** **00000000**

Bit	31	30	29	28	27	26	25	24	23	22	21	20	19	18	17	16
Name						CROP_T										
Type						RW										
Reset	0	0	0	0	0	0	0	0	0	0	0	0	0	0	0	0
Bit	15	14	13	12	11	10	9	8	7	6	5	4	3	2	1	0
Name						CROP_B										
Type						RW										
Reset	0	0	0	0	0	0	0	0	0	0	0	0	0	0	0	0

Bit(s)	Name	Description
26:16	CROP_T	**Vertical cropping start/top position index for pass 1.**
10:0	CROP_B	**Vertical cropping end/bottom position index for pass 1.**

A0410040 RESZ_FRCFG **Image Resizer Fine Resizing Configuration Register** **00000002**

Bit	31	30	29	28	27	26	25	24	23	22	21	20	19	18	17	16
Name											WMSZ1					
Type											RW					
Reset	0	0	0	0	0	0	0	0	0	0	0	0	0	0	0	0
Bit	15	14	13	12	11	10	9	8	7	6	5	4	3	2	1	0
Name	LCKINTEN	MININTEN	PXDINTEN		FSTART1INTEN	FENDINTEN										
Type	RW	RW	RW		RW	RW										
Reset	0	0	0	0	0	0	0	0	0	0	0	0	0	0	1	0

Bit(s)	Name	Description
21:16	WMSZ1	**It stands for working memory size for single pass or 1st pass of two pass resizing. The register specifies how many lines after horizontal resizing can be filled into working memory. Its minimum value is 2 and maximum value is 31. And the formula is (1920 / ((WT+3)/4*4)).**
15	LCKINTEN	**Drop frame due to lock interrupt enable.**
14	MININTEN	**Memory input interrupt enable.**
13	PXDINTEN	**Pixel drop interrupt enable.**
11	FSTART1INTEN	**Frame start of 1st pass interrupt enable.** 0: Interrupt for frame start of 1st pass is disabled. 1: Interrupt for frame start of 1st pass is enabled.
10	FENDINTEN	**Frame end interrupt enable.** 0: Interrupt for frame end is disabled. 1: Interrupt for frame end is enabled.

© 2015 - 2017 MediaTek Inc.

This document contains information that is proprietary to MediaTek Inc. ("MediaTek") and/or its licensor(s).
Any unauthorized use, reproduction or disclosure of this document in whole or in part is strictly prohibited.

A0410090 RESZ_DBGCFG **Image Resizer Debug Configuration Register** **00000200**

Bit	31	30	29	28	27	26	25	24	23	22	21	20	19	18	17	16
Name																
Type																
Reset	0	0	0	0	0	0	0	0	0	0	0	0	0	0	0	0
Bit	15	14	13	12	11	10	9	8	7	6	5	4	3	2	1	0
Name					NODB	PHR1	PVR1									
Type					RW	RW	RW									
Reset	0	0	0	0	0	0	1	0	0	0	0	0	0	0	0	0

Bit(s)	Name	Description
11	NODB	**Force register not double buffered.** 0: Double buffered, registers are effective when camera vsync arrives or memory input starts. 1: No double buffered.
10	PHR1	**Force horizontal resizing to execute even though it's not necessary.** 0: Normal operation. 1: Force horizontal resizing to execute even though it's not necessary.
9	PVR1	**Force vertical resizing to execute even though it's not necessary.** 0: Normal operation. 1: Force vertical resizing to execute even though it's not necessary.

A04100B0 RESZ_INFO0 **Image Resizer Information Register 0** **00000000**

Bit	31	30	29	28	27	26	25	24	23	22	21	20	19	18	17	16
Name	IN_VERT_CNT															
Type	RO															
Reset	0	0	0	0	0	0	0	0	0	0	0	0	0	0	0	0
Bit	15	14	13	12	11	10	9	8	7	6	5	4	3	2	1	0
Name	IN_HORZ_CNT															
Type	RO															
Reset	0	0	0	0	0	0	0	0	0	0	0	0	0	0	0	0

Bit(s)	Name	Description
31:16	IN_VERT_CNT	**Input vertical counter.**
15:0	IN_HORZ_CNT	**Input horizontal counter.**

A04100B4 RESZ_INFO1 **Image Resizer Information Register 1** **00000000**

Bit	31	30	29	28	27	26	25	24	23	22	21	20	19	18	17	16
Name	OUT_VERT_CNT															
Type	RO															
Reset	0	0	0	0	0	0	0	0	0	0	0	0	0	0	0	0
Bit	15	14	13	12	11	10	9	8	7	6	5	4	3	2	1	0
Name	OUT_HORZ_CNT															
Type	RO															
Reset	0	0	0	0	0	0	0	0	0	0	0	0	0	0	0	0

Bit(s)	Name	Description
31:16	OUT_VERT_CNT	**Output vertical counter.**
15:0	OUT_HORZ_CNT	**Output horizontal counter.**

A04100DC RESZ_SMBASE_Y **Image Resizer Y-Component Source Memory Base Address Register** **xxxxxxxx**

Bit	31	30	29	28	27	26	25	24	23	22	21	20	19	18	17	16

This document contains information that is proprietary to MediaTek Inc. ("MediaTek") and/or its licensor(s).
Any unauthorized use, reproduction or disclosure of this document in whole or in part is strictly prohibited.

Name	SMBASE_Y[31:16]															
Type	RW															
Reset																
Bit	15	14	13	12	11	10	9	8	7	6	5	4	3	2	1	0
Name	SMBASE_Y[15:0]															
Type	RW															
Reset																

Bit(s)	Name	Description
31:0	SMBASE_Y	

A04100E0 RESZ_SMBASE_U **Image Resizer U-Component Source Memory Base Address Register** **xxxxxxxx**

Bit	31	30	29	28	27	26	25	24	23	22	21	20	19	18	17	16
Name	SMBASE_U[31:16]															
Type	RW															
Reset																
Bit	15	14	13	12	11	10	9	8	7	6	5	4	3	2	1	0
Name	SMBASE_U[15:0]															
Type	RW															
Reset																

Bit(s)	Name	Description
31:0	SMBASE_U	

A04100E4 RESZ_SMBASE_V **Image Resizer V-Component Source Memory Base Address Register** **xxxxxxxx**

Bit	31	30	29	28	27	26	25	24	23	22	21	20	19	18	17	16
Name	SMBASE_V[31:16]															
Type	RW															
Reset																
Bit	15	14	13	12	11	10	9	8	7	6	5	4	3	2	1	0
Name	SMBASE_V[15:0]															
Type	RW															
Reset																

Bit(s)	Name	Description
31:0	SMBASE_V	

A04100F0 RESZ_GMCCON **Image Resizer GMC Control Register** **00000000**

Bit	31	30	29	28	27	26	25	24	23	22	21	20	19	18	17	16
Name	RD_MIN_REQ_INTERVAL															
Type	RW															
Reset	0	0	0	0	0	0	0	0	0	0	0	0	0	0	0	0
Bit	15	14	13	12	11	10	9	8	7	6	5	4	3	2	1	0
Name												RD_MAX_BL				RD_MIN_REQ_EN
Type												RW				RW
Reset	0	0	0	0	0	0	0	0	0	0	0	0	0	0	0	0

Bit(s)	Name	Description
31:20	RD_MIN_REQ_INTER	**It specifies how many AHB bus cycles between two GMC requests for read**

© 2015 - 2017 MediaTek Inc.
This document contains information that is proprietary to MediaTek Inc. ("MediaTek") and/or its licensor(s).
Any unauthorized use, reproduction or disclosure of this document in whole or in part is strictly prohibited.

	VAL	**port.**
4	RD_MAX_BL	**Specify the maximum burst length of GMC request for read port.** 0: Burst 4 beats access, and one beat is 4 bytes. Total data amount is 16 bytes per access. 1: Single 4 bytes access.
0	RD_MIN_REQ_EN	**Enable GMC port minimum request control for read port.**

A04100FC RESZ_CLIP **Image Resizer CLIP Register** **00000000**

Bit	31	30	29	28	27	26	25	24	23	22	21	20	19	18	17	16
Name	CLIP_EN															
Type	RW															
Reset	0	0	0	0	0	0	0	0	0	0	0	0	0	0	0	0
Bit	15	14	13	12	11	10	9	8	7	6	5	4	3	2	1	0
Name					MEM_WD											
Type					RW											
Reset	0	0	0	0	0	0	0	0	0	0	0	0	0	0	0	0

Bit(s)	Name	Description
31	CLIP_EN	**Enable clip function of memory in mode.** 0: Disable. 1: Enable.
11:0	MEM_WD	**Width of background image. The unit is pixels.**

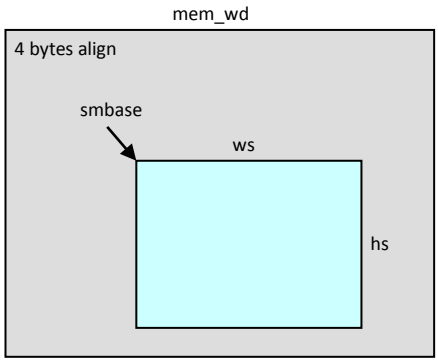

Figure 27-4. Memory clipping chart

Note: MEM_WD should be format aligned.

format	MEM_WD
YUV420	Multiples of 2
YUV422	Multiples of 2
UYVY	Multiples of 2

All of the following registers are for tile-based processing. These registers are inactive while RESZ_CFG.MODE1 is frame mode.

A0410100 RESZ_TILE_CFG **Image Resizer Tile Configuration Register** **00000000**

This document contains information that is proprietary to MediaTek Inc. ("MediaTek") and/or its licensor(s).
Any unauthorized use, reproduction or disclosure of this document in whole or in part is strictly prohibited.

Bit	31	30	29	28	27	26	25	24	23	22	21	20	19	18	17	16
Name																
Type																
Reset	0	0	0	0	0	0	0	0	0	0	0	0	0	0	0	0
Bit	15	14	13	12	11	10	9	8	7	6	5	4	3	2	1	0
Name															SA_EN_Y1	SA_EN_X1
Type															RW	RW
Reset	0	0	0	0	0	0	0	0	0	0	0	0	0	0	0	0

Bit(s)	Name	Description
1	SA_EN_Y1	**Vertical source accumulation enable siganl of 1st pass of resizer.** 0: Disable (frame_target_height ≥ frame_source_height). 1: Enable (frame_target_height < frame_source_height).
0	SA_EN_X1	**Horizontal source accumulation enable siganl of 1st pass of resizer.** 0: Disable (frame_target_width ≥ frame_source_width). 1: Enable (frame_target_width < frame_source_width).

A0410104 RESZ_TILE_START_POS_X1 **Image Resizer Tile Start Position X Register 1** **00000000**

Bit	31	30	29	28	27	26	25	24	23	22	21	20	19	18	17	16
Name		TILE_START_POS_X[30:16]														
Type		RW														
Reset	0	0	0	0	0	0	0	0	0	0	0	0	0	0	0	0
Bit	15	14	13	12	11	10	9	8	7	6	5	4	3	2	1	0
Name	TILE_START_POS_X[15:0]															
Type	RW															
Reset	0	0	0	0	0	0	0	0	0	0	0	0	0	0	0	0

Bit(s)	Name	Description
30:0	TILE_START_POS_X	**Horizontal start position of bilinear interpolation. Format: Q0.11.20. Horizontal start weight of source accumulation. Format: Q0.0.20.**

A041010C RESZ_TILE_START_POS_Y1 **Image Resizer Tile Start Position Y Register 1** **00000000**

Bit	31	30	29	28	27	26	25	24	23	22	21	20	19	18	17	16
Name		TILE_START_POS_Y[30:16]														
Type		RW														
Reset	0	0	0	0	0	0	0	0	0	0	0	0	0	0	0	0
Bit	15	14	13	12	11	10	9	8	7	6	5	4	3	2	1	0
Name	TILE_START_POS_Y[15:0]															
Type	RW															
Reset	0	0	0	0	0	0	0	0	0	0	0	0	0	0	0	0

Bit(s)	Name	Description
30:0	TILE_START_POS_Y	**Vertical start position of bilinear interpolation. Format: Q0.11.20. Vertical start weight of source accumulation. Format: Q0.0.20.**

A0410114 RESZ_BI_TRUNC_ERR_COMP1 **Image Resizer Bilinear Truncation Error Compensation Register 1** **00000000**

This document contains information that is proprietary to MediaTek Inc. ("MediaTek") and/or its licensor(s).
Any unauthorized use, reproduction or disclosure of this document in whole or in part is strictly prohibited.

Bit	31	30	29	28	27	26	25	24	23	22	21	20	19	18	17	16
Name					BI_TRUNC_ERR_COMP_Y											
Type					RW											
Reset	0	0	0	0	0	0	0	0	0	0	0	0	0	0	0	0
Bit	15	14	13	12	11	10	9	8	7	6	5	4	3	2	1	0
Name					BI_TRUNC_ERR_COMP_X											
Type					RW											
Reset	0	0	0	0	0	0	0	0	0	0	0	0	0	0	0	0

Bit(s)	Name	Description
27:16	BI_TRUNC_ERR_COMP_Y	**Vertical condition of truncation error compensation by accumulated residual.**
11:0	BI_TRUNC_ERR_COMP_X	**Horizontal condition of truncation error compensation by accumulated residual.**

A0410118 RESZ_BI_INIT_RESID1 **Image Resizer Bilinear Initial Residual Register 1** **00000000**

Bit	31	30	29	28	27	26	25	24	23	22	21	20	19	18	17	16
Name				BI_INIT_RESID_Y												
Type				RW												
Reset	0	0	0	0	0	0	0	0	0	0	0	0	0	0	0	0
Bit	15	14	13	12	11	10	9	8	7	6	5	4	3	2	1	0
Name				BI_INIT_RESID_X												
Type				RW												
Reset	0	0	0	0	0	0	0	0	0	0	0	0	0	0	0	0

Bit(s)	Name	Description
28:16	BI_INIT_RESID_Y	**Vertical initial residual for truncation error compensation.**
12:0	BI_INIT_RESID_X	**Horizontal initial residual for truncation error compensation.**

Since the bilinear-interpolation step is represented by fixed-point representation, there are truncation errors in the computational process. In order to reduce the truncation-error effect, resizer will compensate the errors at each integer interpolation point. The following is the example.

10 pixels ⟶ 15 pixels

$$\text{step (ratio)} = \frac{10}{15} = \frac{2}{3} \approx 0.625 = \frac{5}{8} \text{(3 - bit binary precision)}$$

$$\text{residual} = 10 \,\%\, 15 = 10$$

$\Rightarrow$ interpolation position

$$0 \quad \frac{2}{3} \quad \frac{4}{3} \quad \boxed{\frac{6}{3}} \quad \frac{8}{3} \quad \cdots$$

interpolation position by fixed point

$$0 \quad \frac{5}{8} \quad \frac{10}{8} \quad \boxed{\frac{15}{8}} \quad \frac{21}{8} \quad \cdots$$

incremental residual $\frac{16}{8}$ (truncation-error compensation)

$$0 \quad 10 \quad 5 \quad \boxed{15} \quad 10 \quad \cdots$$

© 2015 - 2017 MediaTek Inc.
This document contains information that is proprietary to MediaTek Inc. ("MediaTek") and/or its licensor(s).
Any unauthorized use, reproduction or disclosure of this document in whole or in part is strictly prohibited.

28. Image Rotator DMA

28.1. General Description

Image Rotator DMA receives YUV444 pixel data from input interface as shown in Figure 28-1, and output to memory. The architecture is shown in Figure 28-2. When writing to memory, it supports various formats. Supported Ooutput packed formats include: UYVY (YUYV422). Supported oOutput planar formats include: scanline planarYUV420 and YUV422. In this specification, generic YUV format refers to scanline planar YUV420/YUV422. These output formats ares shown in Table 28-1.

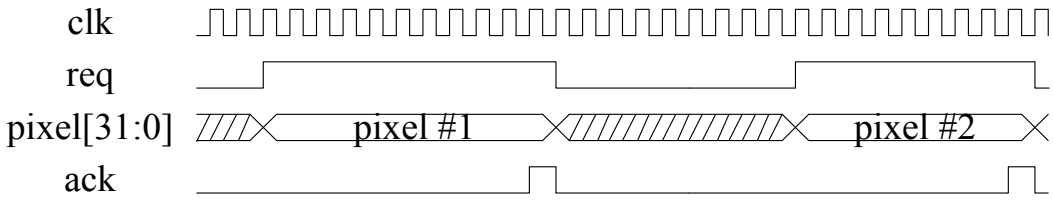

Figure 28-1. Image Rotator DMA Input Interface

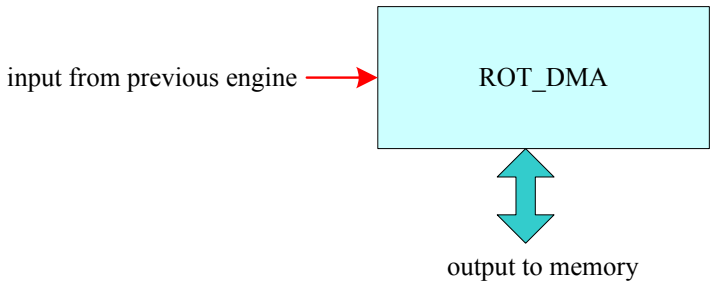

Figure 28-2. Image Rotator DMA Architecture

Table 28-1. ImageRotator DMA Output Format

Output formats
UYVY
Planar YUV420
Planar YUV422

28.1.1. Feature List

- Descriptor based mode
- Hardware auto loop mode
- Color formats transformation
- Output Image pitching for UYVY
- Rotation for UYVY
- Hardware semaphore support

© 2015 - 2017 MediaTek Inc.

This document contains information that is proprietary to MediaTek Inc. (“MediaTek”) and/or its licensor(s).
Any unauthorized use, reproduction or disclosure of this document in whole or in part is strictly prohibited.

28.1.2. Descriptor Format

There are six6 enable signals indicating each 4- bytes command. The full sets of rotator DMA's descriptor is 24s bytes including six6 segments and with four4 bytes each segment.

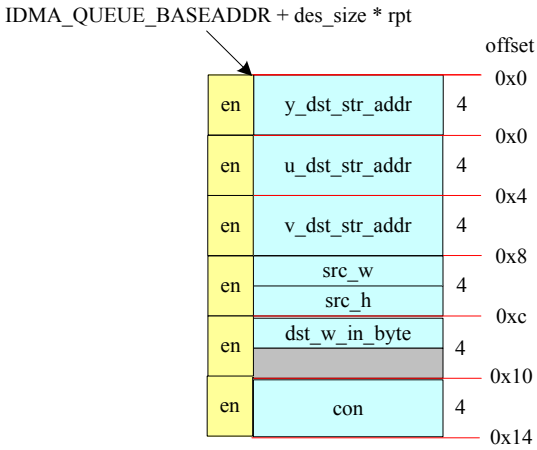

Figure 28-3. Image Rotator DMA Descriptor Format

28.1.3. Frame buffer start address and size notes

Output frame buffer start address must be 4- byte alignment.

The size of each frame buffer must be a multiple of four4 bytes. That is, if output format is YUV420. Y, U and V plane must allocate size of multiple of four4 bytes. If the image size will not occupyied every 4 bytes allocated, the residual bytes not used will be written with dummy data. Dummy data value is undefined and scenario dependent.

The table belowFollowing table summarizes base address and buffer size restrictions.

Table 28-2. Base Address and Buffer Size Restrictions

	Y, U, V frame start address (bytes)	Width (pixels)	Height (pixels)	*HW output size (bytes)	DST_W_IN_BYTE (bytes)
UYVY(packed)	4x	2x	1x	4x	4x
YUV422(planar)	4x	2x	1x	4x	-
YUV420(planar)	4x	2x	2x	4x	-
YUV422(planar) with pitch enabled	4x	8x	1x	4x	8x
YUV420(planar) with pitch enabled	4x	8x	2x	4x	8x

© 2015 - 2017 MediaTek Inc.

This document contains information that is proprietary to MediaTek Inc. ("MediaTek") and/or its licensor(s).
Any unauthorized use, reproduction or disclosure of this document in whole or in part is strictly prohibited.

28.1.4. Rotation

Rotator supports 90 degree of rotation with flip for UYVY color format image of width smaller than or equal to 480 pixels.

28.2. Register Definition

The base address of ROT_DMA is 0xA040_0000.

Register Address	Register Function	Acronym
ROT_DMA+0000h	Rotator DMA Interrupt Flag	ROT_DMA_IRQ_FLAG
ROT_DMA+0008h	Rotator DMA Interrupt Flag Clear	ROT_DMA_IRQ_FLAG_CLR
ROT_DMA+0018h	Rotator DMA Configuration	ROT_DMA_CFG
ROT_DMA+0028h	Rotator DMA Stop Register	ROT_DMA_STOP
ROT_DMA+0030h	Rotator DMA Enable Status	ROT_DMA_EN
ROT_DMA+0038h	Rotator DMA Reset Register	ROT_DMA_RESET
ROT_DMA+0300h	Image Rotator DMA SLOW DOWN	ROT_DMA_SLOW_DOWN
ROT_DMA+0318h	Image Rotator DMA Y Destination Start Address	ROT_DMA_ Y_DST_STR_ADDR
ROT_DMA+0320h	Image Rotator DMA U Destination Start Address	ROT_DMA_ U_DST_STR_ADDR
ROT_DMA+0328h	Image Rotator DMA V Destination Start Address	ROT_DMA_ V_DST_STR_ADDR
ROT_DMA+0330h	Image Rotator DMA Source Image Size	ROT_DMA_SRC_SIZE
ROT_DMA+0348h	Image Rotator DMA Destination Image Size	ROT_DMA_DST_SIZE
ROT_DMA+0368h	Image Rotator DMA Control Register	ROT_DMA_CON

ROT_DMA+0000h **Rotator DMA Interrupt Flag** **ROT_DMA_IRQ_FLAG**

Bit	31	30	29	28	27	26	25	24	23	22	21	20	19	18	17	16
Name																**FLAG0_IRQ_EN**
Type																R/W
Reset																0
Bit	15	14	13	12	11	10	9	8	7	6	5	4	3	2	1	0
Name																**FLAG0**
Type																R/W
Reset																0

© 2015 - 2017 MediaTek Inc.

This document contains information that is proprietary to MediaTek Inc. (“MediaTek”) and/or its licensor(s).
Any unauthorized use, reproduction or disclosure of this document in whole or in part is strictly prohibited.

This register is used by software to parse error message and some events triggered by the engine. Occurrence of these events/error messages is denoted by flags. Flags can issue interrupt which is level triggered. To turn on interrupt issue capability, assert IRQ_EN. Note that interrupt will only issue when engine's EN is asserted. This behavior give software opportunity to prevent unnecessary interrupt before start of engine.

For each flag (e.g. FLAG1):

When read:

- **0** Event/error not took place
- **1** Event/error took place

When write:

- **0** Clear flag. To clear flags, Using IRQ_FLAG_CLR register is preferred.
- **1** Software asserted event/error

For each flag IRQ_EN (e.g. FLAG1_IRQ_EN):

IRQ_EN Interrupt enable. Enable or disable corresponding interrupt issue capability. If the bit is de-asserted, the corresponding flag will still raise in respond to the event, but will not issue interrupt. If asserted, the interrupt will issue at EN==1 if the event takes place.

- **0** Disable.
- **1** Enable.

Flags descriptions:

FLAG0 This is raised when engine finished the descriptor and INT_EN is asserted.

ROT_DMA+0008h Rotator DMA Interrupt Flag Clear Register ROT_DMA_IRQ_FLAG_CLR

Bit	31	30	29	28	27	26	25	24	23	22	21	20	19	18	17	16
Name																
Type																
Bit	15	14	13	12	11	10	9	8	7	6	5	4	3	2	1	0
Name																**FLAG0_CLR**
Type																WO

FLAGn_CLR Clear interrupt flag number n. When clearing interrupt flag and interrupt flag trigger event occur at the same time. Event trigger was given higher priority to let software programmer still notified by the event.

- **0** Do not clear (no effect on interrupt flag)
- **1** Clear interrupt flag

© 2015 - 2017 MediaTek Inc.

This document contains information that is proprietary to MediaTek Inc. ("MediaTek") and/or its licensor(s).
Any unauthorized use, reproduction or disclosure of this document in whole or in part is strictly prohibited.

ROT_DMA+0018h Rotator DMA Configuration ROT_DMA_CFG

Bit	31	30	29	28	27	26	25	24	23	22	21	20	19	18	17	16
Name	**FRAME_SYNC_EN**															**YUV_PITCH_EN**
Type	R/W															
Reset	0															
Bit	15	14	13	12	11	10	9	8	7	6	5	4	3	2	1	0
Name		**DROP**														**AUTO_LOOP**
Type		R/W														R/W
Reset		0														0

AUTO_LOOP Auto loop. Automatically loop back to the first command when all commands are consumed.

- **0** Disable
- **1** Enable

DROP this register only takes effect when en=0 (engine at turn off status)

- **0** stall previous engine's input data if any
- **1** drop previous engine's input data if any

YUV_PITCH_EN Enable pitch mechanism for generic YUV output format. This register only takes effect when OUTPUT_FORMAT is generic YUV.

- **0** Y, U, V data will be written to memory in continuous address respectively if OUTPUT_FORMAT is generic YUV.
- **1** Y plane data will be written to memory in pitch value, DST_W_IN_BYTE and U, V plane data will be written to memory in pitch value, DST_W_IN_BYTE/2. The source width must be multiple of 8.

FRAME_SYNC_EN Frame sync signal from camera. No effect when the DMA engine is not part of camera image datapath.

- **0** Disable
- **1** Enable

ROT_DMA+0028h Rotator DMA Stop Register ROT_DMA_STOP

Bit	31	30	29	28	27	26	25	24	23	22	21	20	19	18	17	16
Name																
Type																
Reset																
Bit	15	14	13	12	11	10	9	8	7	6	5	4	3	2	1	0
Name																**STOP**
Type																R//W
Reset																0

Stop the engine engine by writing this register. When writing 1, DMA engine will stop after finishing the current frame. When writing 0, DMA stop will be de-asserted. This status will be checked at each end of frame. During the engine operation, this status has no effect.

STOP Stop (disable) the DMA engine.

- **0** De-assert stop status

© 2015 - 2017 MediaTek Inc.

This document contains information that is proprietary to MediaTek Inc. ("MediaTek") and/or its licensor(s).
Any unauthorized use, reproduction or disclosure of this document in whole or in part is strictly prohibited.

1 Stop the DMA engine at frame end.

ROT_DMA+0030h Rotator DMA Enable Status Register ROT_DMA_EN

Bit	31	30	29	28	27	26	25	24	23	22	21	20	19	18	17	16
Name																
Type																
Reset																
Bit	15	14	13	12	11	10	9	8	7	6	5	4	3	2	1	0
Name																**EN**
Type																R/W
Reset																0

EN Enable Status. When read, this indicates whether DMA is enabled or not. To enable the engine, write 1 into this register. To stop the engine, use STOP, WARM_RESET or HARD_RESET instead. In register mode and without auto loop, engine will set en = 0 when finishing its job. In auto loop, only when SW assert stop/reset can turn off engine.

ROT_DMA+0038h Rotator DMA Reset Register ROT_DMA_RESET

Bit	31	30	29	28	27	26	25	24	23	22	21	20	19	18	17	16
Name																
Type																
Reset																
Bit	15	14	13	12	11	10	9	8	7	6	5	4	3	2	1	0
Name															**WARM_RST**	**HARD_RST**
Type															R/W	R/W
Reset															0	0

HARD_RST Reset DMA descriptor queue and control register settings. This will clear control settings and in Image DMA registers immediately. This reset may cause pending bus transactions left in the DMA engine. Software should determine an amount of safe reset time and assert the reset for that period of time.

0 De-assert reset

1 Assert reset

WARM_RST Reset DMA descriptor queue and control register settings. This will clear control settings in Image DMA registers after no pending bus transactions left. This is often so called safe reset. This bit will be de-asserted automatically after the settings are cleared. Software should wait for this bit to be de-asserted by hardware before performing other DMA tasks.

0 De-assert reset

1 Assert reset

© 2015 - 2017 MediaTek Inc.

This document contains information that is proprietary to MediaTek Inc. ("MediaTek") and/or its licensor(s).
Any unauthorized use, reproduction or disclosure of this document in whole or in part is strictly prohibited.

ROT_DMA+0300h Image Rotator DMA SLOW DOWN ROT_DMA_SLOW_DOWN

Bit	31	30	29	28	27	26	25	24	23	22	21	20	19	18	17	16
Name	SLOW_CNT															
Type	R/W															
Reset	0															
Bit	15	14	13	12	11	10	9	8	7	6	5	4	3	2	1	0
Name																SLOW_EN
Type																R/W
Reset																0

SLOW_EN Slow down enable. Assert this to slow down engine. Amount of slow down is determined by SLOW_CNT. Enable this to decrease the performance of rotator.

- **0** Disable
- **1** Enable

SLOW_CNT Slow down count. Delay SLOW_CNT cycle to issue next hardware bus transaction. This value is not adjustable during engine operation.

ROT_DMA+0318h Image Rotator DMA Y Destination Start Address ROT_DMA_Y_DST_STR_ADDR

Bit	31	30	29	28	27	26	25	24	23	22	21	20	19	18	17	16
Name	Y_DST_STR_ADDR															
Type	R/W															
Reset	0															
Bit	15	14	13	12	11	10	9	8	7	6	5	4	3	2	1	0
Name	Y_DST_STR_ADDR															
Type	R/W															
Reset	0															

Y_DST_STR_ADDR Destination Y start address. This address indicate the pitch window start address.
When output format is generic YUV, this address indicate the Y plane's start address.
When rotation, an offset must be added, please refer to the "Frame start address" section.

ROT_DMA+0320h Image Rotator DMA U Destination Start Address ROT_DMA_U_DST_STR_ADDR

Bit	31	30	29	28	27	26	25	24	23	22	21	20	19	18	17	16
Name	U_DST_STR_ADDR															
Type	R/W															
Reset	0															
Bit	15	14	13	12	11	10	9	8	7	6	5	4	3	2	1	0
Name	U_DST_STR_ADDR															
Type	R/W															
Reset	0															

U_DST_STR_ADDR Destination U start address. When output format is not generic YUV, this is not used.

© 2015 - 2017 MediaTek Inc.

This document contains information that is proprietary to MediaTek Inc. ("MediaTek") and/or its licensor(s).
Any unauthorized use, reproduction or disclosure of this document in whole or in part is strictly prohibited.

When output format is generic YUV, this address indicates the U plane's start address in planar format.

ROT_DMA+0328h Image Rotator DMA V Destination Start Address — ROT_DMA_V_DST_STR_ADDR

Bit	31	30	29	28	27	26	25	24	23	22	21	20	19	18	17	16
Name	V_DST_STR_ADDR															
Type	R/W															
Reset	0															
Bit	15	14	13	12	11	10	9	8	7	6	5	4	3	2	1	0
Name	V_DST_STR_ADDR															
Type	R/W															
Reset	0															

V_DST_STR_ADDR Destination V start address. When output format is not generic YUV, this is not used.
When output format is generic YUV, this address indicates the V plane's start address.

ROT_DMA+0330h Image Rotator DMA Source Image Size — ROT_DMA_SRC_SIZE

Bit	31	30	29	28	27	26	25	24	23	22	21	20	19	18	17	16
Name						SRC_H										
Type						R/W										
Reset						0										
Bit	15	14	13	12	11	10	9	8	7	6	5	4	3	2	1	0
Name						SRC_W										
Type						R/W										
Reset						0										

SRC_W: (must format Alignment)
Source width. This number indicates the input image's width in pixel. Width of 0 is not valid
SRC_H: (must format Alignment)
Source height. This number indicates the input image's height in pixel. Height of 0 is not valid

ROT_DMA+0348h Image Rotator DMA Destination Image Size — ROT_DMA_DST_SIZE

Bit	31	30	29	28	27	26	25	24	23	22	21	20	19	18	17	16
Name																
Type																
Reset																
Bit	15	14	13	12	11	10	9	8	7	6	5	4	3	2	1	0
Name					DST_W_IN_BYTE											
Type					R/W											
Reset					0											

DST_W_IN_BYTE: (must format Alignment)
Destination width in bytes. This number indicates the destination image's width in pixel, and start from 1. 0 means image size = 0 pixels. dst_w_in_byte = dst_w * 2 for UYVY or dst_w*1 for YUV420/YUV422

© 2015 - 2017 MediaTek Inc.
This document contains information that is proprietary to MediaTek Inc. ("MediaTek") and/or its licensor(s).
Any unauthorized use, reproduction or disclosure of this document in whole or in part is strictly prohibited.

ROT_DMA+0368h Image Rotator DMA Control Register ROT_DMA_CON

Bit	31	30	29	28	27	26	25	24	23	22	21	20	19	18	17	16
Name	**INT_EN**	**NOP**			**ROT_EN**			**V_SUBSAMPLE**								
Type	R/W	R/W			R/W			R/W								
Reset	0	0			0			0								
Bit	15	14	13	12	11	10	9	8	7	6	5	4	3	2	1	0
Name						**THRESHOLD**			**ULTRA_EN**	**PROT_EN**				**OUTPUT_FORMAT**		
Type						R/W			R/W	R/W				R/W		
Reset						3			0	1				0		

OUTPUT_FORMAT Output format

4: UYVY (YUYV422)

7: Generic YUV

Others: Reserved

V_SUBSAMPLE Vertical sub-sampling. If output format is not generic YUV, this bit is meaningless. If output format is generic YUV

- **0** YUV422
- **1** YUV420

THRESHOLD Bus control threshold, the maximum output data size per bus transaction

- **0** 4 bytes
- **3** 16 bytes
- **7** 32 bytes
- **Others** Reserved

ULTRA_EN Enable of bus ultra signal

- **0** Disable
- **1** Enable

PROT_EN Enable of bus protect signal. Set this to 1 when the source is from camera. Set this to 0 when the source is from memory

- **0** Disable
- **1** Enable

ROT_EN Rotation angle. Only UYVY output format can be rotated.

- **0** No rotation
- **1** 90 degree rotation with flip

INT_EN Interrupt enable. When enabled, engine will assert FLAG0 as soon as finishing execution of the descriptor. Not as the name implied, only this bit alone will not issue interrupt. FLAG0_IRQ_EN must also enable for interrupt to take effect.

- **0** Disable
- **1** Enable

NOP No operation command

- **0** Command is no operation. DMA engine will drop incoming frame with the size set in SRC_SIZE
- **1** Command is effective. DMA engine will process incoming frame.

© 2015 - 2017 MediaTek Inc.

This document contains information that is proprietary to MediaTek Inc. ("MediaTek") and/or its licensor(s).
Any unauthorized use, reproduction or disclosure of this document in whole or in part is strictly prohibited.

Performance guidelines:

1. Threshold set the maximum data bytes per transfer. The greater the threshold, the higher DRAM utilization rate. Thus achieving better performance. The recommended value of threshold is 7

© 2015 - 2017 MediaTek Inc.

This document contains information that is proprietary to MediaTek Inc. ("MediaTek") and/or its licensor(s).
Any unauthorized use, reproduction or disclosure of this document in whole or in part is strictly prohibited.

29. General Purpose Inputs/Outputs

29.1. General Description

MT2523G/D platform offers 48 general purpose I/O pins. By setting up the control registers, the MCU software can control the direction, the output value, and read the input values on these pins. These GPIOs and GPOs are multiplexed with other functions to reduce the pin count. To facilitate application use, the software can configure which clock to send outside the chip. There are six clock-out ports embedded in 48 GPIO pins, and each clock-out can be programmed to output appropriate clock source. Besides, when two GPIOs function for the same peripheral IP, the smaller GPIO serial number has higher priority than the one of bigger number.

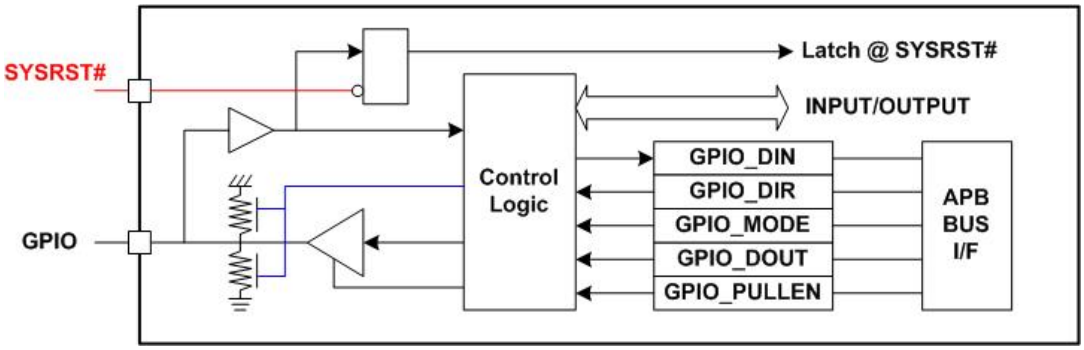

Figure 29-1. GPIO block diagram

29.2. IO Pull Up/Down Control Truth Table

Table 29-1. GPIO v.s. IO type mapping

GPIO Name	IO Type	GPIO Name	IO Type
GPIO0	IO TYPE 4	GPIO25	IO TYPE 1
GPIO1	IO TYPE 4	GPIO26	IO TYPE 1
GPIO2	IO TYPE 4	GPIO27	IO TYPE 1
GPIO3	IO TYPE 4	GPIO28	IO TYPE 1
GPIO4	IO TYPE 1	GPIO29	IO TYPE 1
GPIO5	IO TYPE 1	GPIO30	IO TYPE 1
GPIO6	IO TYPE 1	GPIO31	IO TYPE 1
GPIO7	IO TYPE 1	GPIO32	IO TYPE 1
GPIO8	IO TYPE 1	GPIO33	IO TYPE 1
GPIO9	IO TYPE 1	GPIO34	IO TYPE 1
GPIO10	IO TYPE 4	GPIO35	IO TYPE 1

© 2015 - 2017 MediaTek Inc.

This document contains information that is proprietary to MediaTek Inc. (“MediaTek”) and/or its licensor(s).
Any unauthorized use, reproduction or disclosure of this document in whole or in part is strictly prohibited.

GPIO Name	IO Type	GPIO Name	IO Type
GPIO11	IO TYPE 1	GPIO36	IO TYPE 1
GPIO12	IO TYPE 1	GPIO37	IO TYPE 1
GPIO13	IO TYPE 1	GPIO38	IO TYPE 1
GPIO14	IO TYPE 1	GPIO39	IO TYPE 1
GPIO15	IO TYPE 1	GPIO40	IO TYPE 1
GPIO16	IO TYPE 1	GPIO41	IO TYPE 1
GPIO17	IO TYPE 1	GPIO42	IO TYPE 1
GPIO18	IO TYPE 3	GPIO43	IO TYPE 1
GPIO19	IO TYPE 3	GPIO44	IO TYPE 1
GPIO20	IO TYPE 3	GPIO45	IO TYPE 1
GPIO21	IO TYPE 2	GPIO46	IO TYPE 1
GPIO22	IO TYPE 2	GPIO47	IO TYPE 1
GPIO23	IO TYPE 2	GPIO48	IO TYPE 1
GPIO24	IO TYPE 1		

Refer to the truth table of pull-up/down control for the all GPIO pins excludingGPIO_0, GPIO_1, GPIO_2, GPIO_3, and GPIO_10.

Table 29-2. IO type 1 - pull up/down control

GPIO_DIR	GPIO_PUPD	GPIO_R1	GPIO_R0	Resistance Value
0	0	0	0	High-Z
0	0	0	1	Pull-Up, 47K
0	0	1	0	Pull-Up, 47K
0	0	1	1	Pull-Up, 23.5K
0	1	0	0	High-Z
0	1	0	1	Pull-Down, 47K
0	1	1	0	Pull-Down, 47K
0	1	1	1	Pull-Down, 23.5K
1	X	X	X	High-Z

© 2015 - 2017 MediaTek Inc.

This document contains information that is proprietary to MediaTek Inc. (“MediaTek”) and/or its licensor(s).
Any unauthorized use, reproduction or disclosure of this document in whole or in part is strictly prohibited.

Table 29-3. IO type 2 - pull up/down control

GPIO_DIR	GPIO_PUPD	GPIO_R1	GPIO_R0	Resistance Value
0	0	0	0	High-Z
0	0	0	1	Pull-up, 75K
0	0	1	0	Pull-up, 200K
0	0	1	1	Pull-up, 75K parallel 200K
0	1	0	0	High-Z
0	1	0	1	Pull-down, 75K
0	1	1	0	Pull-down, 200K
0	1	1	1	Pull-down, 75K parallel 200K
1	X	X	X	High-Z

Table 29-4. IO type 3 - pull up/down control

GPIO_DIR	GPIO_PUPD	GPIO_R1	GPIO_R0	Resistance Value
0	0	0	0	High-Z
0	0	0	1	Pull-up, 75K
0	0	1	0	Pull-up, 2K
0	0	1	1	Pull-up, 75K parallel 2K
0	1	0	0	High-Z
0	1	0	1	Pull-down, 75K
0	1	1	0	Pull-down, 2K
0	1	1	1	Pull-down, 75K parallel 2K
1	X	X	X	High-Z

© 2015 - 2017 MediaTek Inc.

This document contains information that is proprietary to MediaTek Inc. (“MediaTek”) and/or its licensor(s).
Any unauthorized use, reproduction or disclosure of this document in whole or in part is strictly prohibited.

Table 29-4. IO type 4 - pull up/down control

GPIO_DIR	GPIO_PULLEN	GPIO_PULLSEL	Resistance Value
0	1	1	Pull-up, 75K
0	0	0	High-Z
0	1	0	Pull-down, 75K
1	X	X	High-Z

29.3. Register Definition

Module name: gpio_reg Base address: (+A2020000h)

Address	Name	Width	Register Function
A2020000	GPIO_DIR0	32	**GPIO Direction Control** Configures GPIO direction
A2020004	GPIO_DIR0_SET	32	**GPIO Direction Control** For bitwise access of GPIO_DIR0
A2020008	GPIO_DIR0_CLR	32	**GPIO Direction Control** For bitwise access of GPIO_DIR0
A2020010	GPIO_DIR1	32	**GPIO Direction Control** Configures GPIO direction
A2020014	GPIO_DIR1_SET	32	**GPIO Direction Control** For bitwise access of GPIO_DIR1
A2020018	GPIO_DIR1_CLR	32	**GPIO Direction Control** For bitwise access of GPIO_DIR1
A2020100	GPIO_PULLEN0	32	**GPIO Pull-up/down Enable Control** Configures GPIO pull enabling
A2020104	GPIO_PULLEN0_SET	32	**GPIO Pull-up/down Enable Control** For bitwise access of GPIO_PULLEN0
A2020108	GPIO_PULLEN0_CLR	32	**GPIO Pull-up/down Enable Control** For bitwise access of GPIO_PULLEN0
A2020200	GPIO_DINV0	32	**GPIO Data Inversion Control** Configures GPIO inversion enabling
A2020204	GPIO_DINV0_SET	32	**GPIO Data Inversion Control** For bitwise access of GPIO_DINV0
A2020208	GPIO_DINV0_CLR	32	**GPIO Data Inversion Control** For bitwise access of GPIO_DINV0
A2020210	GPIO_DINV1	32	**GPIO Data Inversion Control** Configures GPIO inversion enabling
A2020214	GPIO_DINV1_SET	32	**GPIO Data Inversion Control** For bitwise access of GPIO_DINV1
A2020218	GPIO_DINV1_CLR	32	**GPIO Data Inversion Control** For bitwise access of GPIO_DINV1
A2020300	GPIO_DOUT0	32	**GPIO Output Data Control** Configures GPIO output value
A2020304	GPIO_DOUT0_SET	32	**GPIO Output Data Control** For bitwise access of GPIO_DIR0

© 2015 - 2017 MediaTek Inc.

This document contains information that is proprietary to MediaTek Inc. ("MediaTek") and/or its licensor(s).
Any unauthorized use, reproduction or disclosure of this document in whole or in part is strictly prohibited.

A2020308	GPIO_DOUT0_CLR	32	**GPIO Output Data Control** For bitwise access of GPIO_DIR0
A2020310	GPIO_DOUT1	32	**GPIO Output Data Control** Configures GPIO output value
A2020314	GPIO_DOUT1_SET	32	**GPIO Output Data Control** For bitwise access of GPIO_DIR1
A2020318	GPIO_DOUT1_CLR	32	**GPIO Output Data Control** For bitwise access of GPIO_DIR1
A2020400	GPIO_DIN0	32	**GPIO Input Data Value** Reads GPIO input value
A2020410	GPIO_DIN1	32	**GPIO Input Data Value** Reads GPIO input value
A2020500	GPIO_PULLSEL0	32	**GPIO Pullsel Control** Configures GPIO PUPD selection
A2020504	GPIO_PULLSEL0_SET	32	**GPIO Pullsel Control** For bitwise access of GPIO_PULLSEL0
A2020508	GPIO_PULLSEL0_CLR	32	**GPIO Pullsel Control** For bitwise access of GPIO_PULLSEL0
A2020600	GPIO_SMT0	32	**GPIO SMT Control** Configures GPIO Schmitt trigger control
A2020604	GPIO_SMT0_SET	32	**GPIO SMT Control** For bitwise access of GPIO_SMT0
A2020608	GPIO_SMT0_CLR	32	**GPIO SMT Control** For bitwise access of GPIO_SMT0
A2020610	GPIO_SMT1	32	**GPIO SMT Control** Configures GPIO Schmitt trigger control
A2020614	GPIO_SMT1_SET	32	**GPIO SMT Control** For bitwise access of GPIO_SMT1
A2020618	GPIO_SMT1_CLR	32	**GPIO SMT Control** For bitwise access of GPIO_SMT1
A2020700	GPIO_SR0	32	**GPIO SR Control** Configures GPIO slew rate control
A2020704	GPIO_SR0_SET	32	**GPIO SR Control** For bitwise access of GPIO_SR0
A2020708	GPIO_SR0_CLR	32	**GPIO SR Control** For bitwise access of GPIO_SR0
A2020710	GPIO_SR1	32	**GPIO SR Control** Configures GPIO slew rate control
A2020714	GPIO_SR1_SET	32	**GPIO SR Control** For bitwise access of GPIO_SR1
A2020718	GPIO_SR1_CLR	32	**GPIO SR Control** For bitwise access of GPIO_SR1
A2020800	GPIO_DRV0	32	**GPIO DRV Control** Configures GPIO driving control
A2020804	GPIO_DRV0_SET	32	**GPIO DRV Control** For bitwise access of GPIO_DRV0
A2020808	GPIO_DRV0_CLR	32	**GPIO DRV Control** For bitwise access of GPIO_DRV0
A2020810	GPIO_DRV1	32	**GPIO DRV Control** Configures GPIO driving control
A2020814	GPIO_DRV1_SET	32	**GPIO DRV Control** For bitwise access of GPIO_DRV1
A2020818	GPIO_DRV1_CLR	32	**GPIO DRV Control** For bitwise access of GPIO_DRV1

© 2015 - 2017 MediaTek Inc.

This document contains information that is proprietary to MediaTek Inc. ("MediaTek") and/or its licensor(s).
Any unauthorized use, reproduction or disclosure of this document in whole or in part is strictly prohibited.

A2020820	GPIO_DRV2	32	**GPIO DRV Control** Configures GPIO driving control
A2020824	GPIO_DRV2_SET	32	**GPIO DRV Control** For bitwise access of GPIO_DRV2
A2020828	GPIO_DRV2_CLR	32	**GPIO DRV Control** For bitwise access of GPIO_DRV2
A2020830	GPIO_DRV3	32	**GPIO DRV Control** Configures GPIO driving control
A2020834	GPIO_DRV3_SET	32	**GPIO DRV Control** For bitwise access of GPIO_DRV3
A2020838	GPIO_DRV3_CLR	32	**GPIO DRV Control** For bitwise access of GPIO_DRV3
A2020900	GPIO_IES0	32	**GPIO IES Control** Configures GPIO input enabling control
A2020904	GPIO_IES0_SET	32	**GPIO IES Control** For bitwise access of GPIO_IES0
A2020908	GPIO_IES0_CLR	32	**GPIO IES Control** For bitwise access of GPIO_IES0
A2020910	GPIO_IES1	32	**GPIO IES Control** Configures GPIO input enabling control
A2020914	GPIO_IES1_SET	32	**GPIO IES Control** For bitwise access of GPIO_IES1
A2020918	GPIO_IES1_CLR	32	**GPIO IES Control** For bitwise access of GPIO_IES1
A2020A00	GPIO_PUPD0	32	**GPIO PUPD Control** Configures GPIO PUPD control
A2020A04	GPIO_PUPD0_SET	32	**GPIO PUPD Control** For bitwise access of GPIO_PUPD0
A2020A08	GPIO_PUPD0_CLR	32	**GPIO PUPD Control** For bitwise access of GPIO_PUPD0
A2020A10	GPIO_PUPD1	32	**GPIO PUPD Control** Configures GPIO PUPD control
A2020A14	GPIO_PUPD1_SET	32	**GPIO PUPD Control** For bitwise access of GPIO_PUPD1
A2020A18	GPIO_PUPD1_CLR	32	**GPIO PUPD Control** For bitwise access of GPIO_PUPD1
A2020B00	GPIO_RESEN0_0	32	**GPIO R0 Control** Configures GPIO R0 control
A2020B04	GPIO_RESEN0_0_SET	32	**GPIO R0 Control** For bitwise access of GPIO_RESEN0_0
A2020B08	GPIO_RESEN0_0_CLR	32	**GPIO R0 Control** For bitwise access of GPIO_RESEN0_0
A2020B10	GPIO_RESEN0_1	32	**GPIO R0 Control** Configures GPIO R0 control
A2020B14	GPIO_RESEN0_1_SET	32	**GPIO R0 Control** For bitwise access of GPIO_RESEN0_1
A2020B18	GPIO_RESEN0_1_CLR	32	**GPIO R0 Control** For bitwise access of GPIO_RESEN0_1
A2020B20	GPIO_RESEN1_0	32	**GPIO R1 Control** Configures GPIO R1 control
A2020B24	GPIO_RESEN1_0_SET	32	**GPIO R1 Control** For bitwise access of GPIO_RESEN1_0
A2020B28	GPIO_RESEN1_0_CLR	32	**GPIO R1 Control** For bitwise access of GPIO_RESEN1_0

© 2015 - 2017 MediaTek Inc.

This document contains information that is proprietary to MediaTek Inc. ("MediaTek") and/or its licensor(s).
Any unauthorized use, reproduction or disclosure of this document in whole or in part is strictly prohibited.

A2020B30	GPIO_RESEN1_1	32	**GPIO R1 Control** Configures GPIO R1 control
A2020B34	GPIO_RESEN1_1_SET	32	**GPIO R1 Control** For bitwise access of GPIO_RESEN1_1
A2020B38	GPIO_RESEN1_1_CLR	32	**GPIO R1 Control** For bitwise access of GPIO_RESEN1_1
A2020C00	GPIO_MODE0	32	**GPIO Mode Control** Configures GPIO aux. mode
A2020C04	GPIO_MODE0_SET	32	**GPIO Mode Control** For bitwise access of GPIO_MODE0
A2020C08	GPIO_MODE0_CLR	32	**GPIO Mode Control** For bitwise access of GPIO_MODE0
A2020C10	GPIO_MODE1	32	**GPIO Mode Control** Configures GPIO aux. mode
A2020C14	GPIO_MODE1_SET	32	**GPIO Mode Control** For bitwise access of GPIO_MODE1
A2020C18	GPIO_MODE1_CLR	32	**GPIO Mode Control** For bitwise access of GPIO_MODE1
A2020C20	GPIO_MODE2	32	**GPIO Mode Control** Configures GPIO aux. mode
A2020C24	GPIO_MODE2_SET	32	**GPIO Mode Control** For bitwise access of GPIO_MODE2
A2020C28	GPIO_MODE2_CLR	32	**GPIO Mode Control** For bitwise access of GPIO_MODE2
A2020C30	GPIO_MODE3	32	**GPIO Mode Control** Configures GPIO aux. mode
A2020C34	GPIO_MODE3_SET	32	**GPIO Mode Control** For bitwise access of GPIO_MODE3
A2020C38	GPIO_MODE3_CLR	32	**GPIO Mode Control** For bitwise access of GPIO_MODE3
A2020C40	GPIO_MODE4	32	**GPIO Mode Control** Configures GPIO aux. mode
A2020C44	GPIO_MODE4_SET	32	**GPIO Mode Control** For bitwise access of GPIO_MODE4
A2020C48	GPIO_MODE4_CLR	32	**GPIO Mode Control** For bitwise access of GPIO_MODE4
A2020C50	GPIO_MODE5	32	**GPIO Mode Control** Configures GPIO aux. mode
A2020C54	GPIO_MODE5_SET	32	**GPIO Mode Control** For bitwise access of GPIO_MODE5
A2020C58	GPIO_MODE5_CLR	32	**GPIO Mode Control** For bitwise access of GPIO_MODE5
A2020C60	GPIO_MODE6	32	**GPIO Mode Control** Configures GPIO aux. mode
A2020C64	GPIO_MODE6_SET	32	**GPIO Mode Control** For bitwise access of GPIO_MODE6
A2020C68	GPIO_MODE6_CLR	32	**GPIO Mode Control** For bitwise access of GPIO_MODE6
A2020D00	GPIO_TDSEL0	32	**GPIO TDSEL Control** GPIO TX duty control register
A2020D04	GPIO_TDSEL0_SET	32	**GPIO TDSEL Control** For bitwise access of GPIO_TDSEL
A2020D08	GPIO_TDSEL0_CLR	32	**GPIO TDSEL Control** For bitwise access of GPIO_TDSEL

© 2015 - 2017 MediaTek Inc.

This document contains information that is proprietary to MediaTek Inc. ("MediaTek") and/or its licensor(s).
Any unauthorized use, reproduction or disclosure of this document in whole or in part is strictly prohibited.

A2020D10	GPIO_TDSEL1	32	**GPIO TDSEL Control** GPIO TX duty control register
A2020D14	GPIO_TDSEL1_SET	32	**GPIO TDSEL Control** For bitwise access of GPIO_TDSEL
A2020D18	GPIO_TDSEL1_CLR	32	**GPIO TDSEL Control** For bitwise access of GPIO_TDSEL
A2020D20	GPIO_TDSEL2	32	**GPIO TDSEL Control** GPIO TX duty control register
A2020D24	GPIO_TDSEL2_SET	32	**GPIO TDSEL Control** For bitwise access of GPIO_TDSEL
A2020D28	GPIO_TDSEL2_CLR	32	**GPIO TDSEL Control** For bitwise access of GPIO_TDSEL
A2020D30	GPIO_TDSEL3	32	**GPIO TDSEL Control** GPIO TX duty control register
A2020D34	GPIO_TDSEL3_SET	32	**GPIO TDSEL Control** For bitwise access of GPIO_TDSEL
A2020D38	GPIO_TDSEL3_CLR	32	**GPIO TDSEL Control** For bitwise access of GPIO_TDSEL
A2020E00	CLK_OUT0	32	**CLK Out Selection Control** CLK OUT0 Setting
A2020E10	CLK_OUT1	32	**CLK Out Selection Control** CLK OUT1 Setting
A2020E20	CLK_OUT2	32	**CLK Out Selection Control** CLK OUT2 Setting
A2020E30	CLK_OUT3	32	**CLK Out Selection Control** CLK OUT3 Setting
A2020E40	CLK_OUT4	32	**CLK Out Selection Control** CLK OUT4 Setting
A2020E50	CLK_OUT5	32	**CLK Out Selection Control** CLK OUT5 Setting

A2020000 GPIO_DIR0 GPIO Direction Control 02020000

Bit	31	30	29	28	27	26	25	24	23	22	21	20	19	18	17	16
Mne	GPIO31	GPIO30	GPIO29	GPIO28	GPIO27	GPIO26	GPIO25	GPIO24	GPIO23	GPIO22	GPIO21	GPIO20	GPIO19	GPIO18	GPIO17	GPIO16
Type	RW	RW	RW	RW	RW	RW	RW	RW	RW	RW	RW	RW	RW	RW	RW	RW
Reset	0	0	0	0	0	0	1	0	0	0	0	0	0	0	1	0
Bit	15	14	13	12	11	10	9	8	7	6	5	4	3	2	1	0
Mne	GPIO15	GPIO14	GPIO13	GPIO12	GPIO11	GPIO10	GPIO9	GPIO8	GPIO7	GPIO6	GPIO5	GPIO4	GPIO3	GPIO2	GPIO1	GPIO0
Type	RW	RW	RW	RW	RW	RW	RW	RW	RW	RW	RW	RW	RW	RW	RW	RW
Reset	0	0	0	0	0	0	0	0	0	0	0	0	0	0	0	0

Overview Configures GPIO direction

Bit(s)	Mnemonic	Name	Description
31	**GPIO31**	GPIO31_DIR	**GPIO31 direction control** 0: GPIO as input 1: GPIO as output
30	**GPIO30**	GPIO30_DIR	**GPIO30 direction control** 0: GPIO as input 1: GPIO as output
29	**GPIO29**	GPIO29_DIR	**GPIO29 direction control** 0: GPIO as input

© 2015 - 2017 MediaTek Inc.

This document contains information that is proprietary to MediaTek Inc. ("MediaTek") and/or its licensor(s).
Any unauthorized use, reproduction or disclosure of this document in whole or in part is strictly prohibited.

Bit(s)	Mnemonic	Name	Description
			1: GPIO as output
28	**GPIO28**	GPIO28_DIR	**GPIO28 direction control** 0: GPIO as input 1: GPIO as output
27	**GPIO27**	GPIO27_DIR	**GPIO27 direction control** 0: GPIO as input 1: GPIO as output
26	**GPIO26**	GPIO26_DIR	**GPIO26 direction control** 0: GPIO as input 1: GPIO as output
25	**GPIO25**	GPIO25_DIR	**GPIO25 direction control** 0: GPIO as input 1: GPIO as output
24	**GPIO24**	GPIO24_DIR	**GPIO24 direction control** 0: GPIO as input 1: GPIO as output
23	**GPIO23**	GPIO23_DIR	**GPIO23 direction control** 0: GPIO as input 1: GPIO as output
22	**GPIO22**	GPIO22_DIR	**GPIO22 direction control** 0: GPIO as input 1: GPIO as output
21	**GPIO21**	GPIO21_DIR	**GPIO21 direction control** 0: GPIO as input 1: GPIO as output
20	**GPIO20**	GPIO20_DIR	**GPIO20 direction control** 0: GPIO as input 1: GPIO as output
19	**GPIO19**	GPIO19_DIR	**GPIO19 direction control** 0: GPIO as input 1: GPIO as output
18	**GPIO18**	GPIO18_DIR	**GPIO18 direction control** 0: GPIO as input 1: GPIO as output
17	**GPIO17**	GPIO17_DIR	**GPIO17 direction control** 0: GPIO as input 1: GPIO as output
16	**GPIO16**	GPIO16_DIR	**GPIO16 direction control** 0: GPIO as input 1: GPIO as output
15	**GPIO15**	GPIO15_DIR	**GPIO15 direction control** 0: GPIO as input 1: GPIO as output
14	**GPIO14**	GPIO14_DIR	**GPIO14 direction control** 0: GPIO as input 1: GPIO as output
13	**GPIO13**	GPIO13_DIR	**GPIO13 direction control** 0: GPIO as input 1: GPIO as output
12	**GPIO12**	GPIO12_DIR	**GPIO12 direction control** 0: GPIO as input 1: GPIO as output
11	**GPIO11**	GPIO11_DIR	**GPIO11 direction control** 0: GPIO as input

© 2015 - 2017 MediaTek Inc.

This document contains information that is proprietary to MediaTek Inc. (“MediaTek”) and/or its licensor(s).
Any unauthorized use, reproduction or disclosure of this document in whole or in part is strictly prohibited.

Bit(s)	Mnemonic	Name	Description
			1: GPIO as output
10	**GPIO10**	GPIO10_DIR	**GPIO10 direction control** 0: GPIO as input 1: GPIO as output
9	**GPIO9**	GPIO9_DIR	**GPIO9 direction control** 0: GPIO as input 1: GPIO as output
8	**GPIO8**	GPIO8_DIR	**GPIO8 direction control** 0: GPIO as input 1: GPIO as output
7	**GPIO7**	GPIO7_DIR	**GPIO7 direction control** 0: GPIO as input 1: GPIO as output
6	**GPIO6**	GPIO6_DIR	**GPIO6 direction control** 0: GPIO as input 1: GPIO as output
5	**GPIO5**	GPIO5_DIR	**GPIO5 direction control** 0: GPIO as input 1: GPIO as output
4	**GPIO4**	GPIO4_DIR	**GPIO4 direction control** 0: GPIO as input 1: GPIO as output
3	**GPIO3**	GPIO3_DIR	**GPIO3 direction control** 0: GPIO as input 1: GPIO as output
2	**GPIO2**	GPIO2_DIR	**GPIO2 direction control** 0: GPIO as input 1: GPIO as output
1	**GPIO1**	GPIO1_DIR	**GPIO1 direction control** 0: GPIO as input 1: GPIO as output
0	**GPIO0**	GPIO0_DIR	**GPIO0 direction control** 0: GPIO as input 1: GPIO as output

A2020004 GPIO_DIR0_SET GPIO Direction Control 00000000

Bit	31	30	29	28	27	26	25	24	23	22	21	20	19	18	17	16
Mne	GPIO31	GPIO30	GPIO29	GPIO28	GPIO27	GPIO26	GPIO25	GPIO24	GPIO23	GPIO22	GPIO21	GPIO20	GPIO19	GPIO18	GPIO17	GPIO16
Type	WO	WO	WO	WO	WO	WO	WO	WO	WO	WO	WO	WO	WO	WO	WO	WO
Reset	0	0	0	0	0	0	0	0	0	0	0	0	0	0	0	0
Bit	15	14	13	12	11	10	9	8	7	6	5	4	3	2	1	0
Mne	GPIO15	GPIO14	GPIO13	GPIO12	GPIO11	GPIO10	GPIO9	GPIO8	GPIO7	GPIO6	GPIO5	GPIO4	GPIO3	GPIO2	GPIO1	GPIO0
Type	WO	WO	WO	WO	WO	WO	WO	WO	WO	WO	WO	WO	WO	WO	WO	WO
Reset	0	0	0	0	0	0	0	0	0	0	0	0	0	0	0	0

Overview For bitwise access of GPIO_DIR0

Bit(s)	Mnemonic	Name	Description
31	**GPIO31**	GPIO31_DIR	**Bitwise SET operation of GPIO31 direction** 0: Keep 1: SET bits

© 2015 - 2017 MediaTek Inc.

This document contains information that is proprietary to MediaTek Inc. ("MediaTek") and/or its licensor(s).
Any unauthorized use, reproduction or disclosure of this document in whole or in part is strictly prohibited.

Bit(s)	Mnemonic	Name	Description
30	**GPIO30**	GPIO30_DIR	**Bitwise SET operation of GPIO30 direction** 0: Keep 1: SET bits
29	**GPIO29**	GPIO29_DIR	**Bitwise SET operation of GPIO29 direction** 0: Keep 1: SET bits
28	**GPIO28**	GPIO28_DIR	**Bitwise SET operation of GPIO28 direction** 0: Keep 1: SET bits
27	**GPIO27**	GPIO27_DIR	**Bitwise SET operation of GPIO27 direction** 0: Keep 1: SET bits
26	**GPIO26**	GPIO26_DIR	**Bitwise SET operation of GPIO26 direction** 0: Keep 1: SET bits
25	**GPIO25**	GPIO25_DIR	**Bitwise SET operation of GPIO25 direction** 0: Keep 1: SET bits
24	**GPIO24**	GPIO24_DIR	**Bitwise SET operation of GPIO24 direction** 0: Keep 1: SET bits
23	**GPIO23**	GPIO23_DIR	**Bitwise SET operation of GPIO23 direction** 0: Keep 1: SET bits
22	**GPIO22**	GPIO22_DIR	**Bitwise SET operation of GPIO22 direction** 0: Keep 1: SET bits
21	**GPIO21**	GPIO21_DIR	**Bitwise SET operation of GPIO21 direction** 0: Keep 1: SET bits
20	**GPIO20**	GPIO20_DIR	**Bitwise SET operation of GPIO20 direction** 0: Keep 1: SET bits
19	**GPIO19**	GPIO19_DIR	**Bitwise SET operation of GPIO19 direction** 0: Keep 1: SET bits
18	**GPIO18**	GPIO18_DIR	**Bitwise SET operation of GPIO18 direction** 0: Keep 1: SET bits
17	**GPIO17**	GPIO17_DIR	**Bitwise SET operation of GPIO17 direction** 0: Keep 1: SET bits
16	**GPIO16**	GPIO16_DIR	**Bitwise SET operation of GPIO16 direction** 0: Keep 1: SET bits
15	**GPIO15**	GPIO15_DIR	**Bitwise SET operation of GPIO15 direction** 0: Keep 1: SET bits
14	**GPIO14**	GPIO14_DIR	**Bitwise SET operation of GPIO14 direction** 0: Keep 1: SET bits
13	**GPIO13**	GPIO13_DIR	**Bitwise SET operation of GPIO13 direction** 0: Keep 1: SET bits

© 2015 - 2017 MediaTek Inc.

This document contains information that is proprietary to MediaTek Inc. (“MediaTek”) and/or its licensor(s).
Any unauthorized use, reproduction or disclosure of this document in whole or in part is strictly prohibited.

Bit(s)	Mnemonic	Name	Description
12	**GPIO12**	GPIO12_DIR	**Bitwise SET operation of GPIO12 direction** 0: Keep 1: SET bits
11	**GPIO11**	GPIO11_DIR	**Bitwise SET operation of GPIO11 direction** 0: Keep 1: SET bits
10	**GPIO10**	GPIO10_DIR	**Bitwise SET operation of GPIO10 direction** 0: Keep 1: SET bits
9	**GPIO9**	GPIO9_DIR	**Bitwise SET operation of GPIO9 direction** 0: Keep 1: SET bits
8	**GPIO8**	GPIO8_DIR	**Bitwise SET operation of GPIO8 direction** 0: Keep 1: SET bits
7	**GPIO7**	GPIO7_DIR	**Bitwise SET operation of GPIO7 direction** 0: Keep 1: SET bits
6	**GPIO6**	GPIO6_DIR	**Bitwise SET operation of GPIO6 direction** 0: Keep 1: SET bits
5	**GPIO5**	GPIO5_DIR	**Bitwise SET operation of GPIO5 direction** 0: Keep 1: SET bits
4	**GPIO4**	GPIO4_DIR	**Bitwise SET operation of GPIO4 direction** 0: Keep 1: SET bits
3	**GPIO3**	GPIO3_DIR	**Bitwise SET operation of GPIO3 direction** 0: Keep 1: SET bits
2	**GPIO2**	GPIO2_DIR	**Bitwise SET operation of GPIO2 direction** 0: Keep 1: SET bits
1	**GPIO1**	GPIO1_DIR	**Bitwise SET operation of GPIO1 direction** 0: Keep 1: SET bits
0	**GPIO0**	GPIO0_DIR	**Bitwise SET operation of GPIO0 direction** 0: Keep 1: SET bits

A2020008 GPIO_DIR0_CLR GPIO Direction Control 00000000

Bit	31	30	29	28	27	26	25	24	23	22	21	20	19	18	17	16
Mne	GPIO31	GPIO30	GPIO29	GPIO28	GPIO27	GPIO26	GPIO25	GPIO24	GPIO23	GPIO22	GPIO21	GPIO20	GPIO19	GPIO18	GPIO17	GPIO16
Type	WO	WO	WO	WO	WO	WO	WO	WO	WO	WO	WO	WO	WO	WO	WO	WO
Reset	0	0	0	0	0	0	0	0	0	0	0	0	0	0	0	0
Bit	15	14	13	12	11	10	9	8	7	6	5	4	3	2	1	0
Mne	GPIO15	GPIO14	GPIO13	GPIO12	GPIO11	GPIO10	GPIO9	GPIO8	GPIO7	GPIO6	GPIO5	GPIO4	GPIO3	GPIO2	GPIO1	GPIO0
Type	WO	WO	WO	WO	WO	WO	WO	WO	WO	WO	WO	WO	WO	WO	WO	WO
Reset	0	0	0	0	0	0	0	0	0	0	0	0	0	0	0	0

Overview For bitwise access of GPIO_DIR0

© 2015 - 2017 MediaTek Inc.
This document contains information that is proprietary to MediaTek Inc. ("MediaTek") and/or its licensor(s).
Any unauthorized use, reproduction or disclosure of this document in whole or in part is strictly prohibited.

Bit(s)	Mnemonic	Name	Description
31	**GPIO31**	GPIO31_DIR	**Bitwise CLR operation of GPIO31 direction** 0: Keep 1: CLR bits
30	**GPIO30**	GPIO30_DIR	**Bitwise CLR operation of GPIO30 direction** 0: Keep 1: CLR bits
29	**GPIO29**	GPIO29_DIR	**Bitwise CLR operation of GPIO29 direction** 0: Keep 1: CLR bits
28	**GPIO28**	GPIO28_DIR	**Bitwise CLR operation of GPIO28 direction** 0: Keep 1: CLR bits
27	**GPIO27**	GPIO27_DIR	**Bitwise CLR operation of GPIO27 direction** 0: Keep 1: CLR bits
26	**GPIO26**	GPIO26_DIR	**Bitwise CLR operation of GPIO26 direction** 0: Keep 1: CLR bits
25	**GPIO25**	GPIO25_DIR	**Bitwise CLR operation of GPIO25 direction** 0: Keep 1: CLR bits
24	**GPIO24**	GPIO24_DIR	**Bitwise CLR operation of GPIO24 direction** 0: Keep 1: CLR bits
23	**GPIO23**	GPIO23_DIR	**Bitwise CLR operation of GPIO23 direction** 0: Keep 1: CLR bits
22	**GPIO22**	GPIO22_DIR	**Bitwise CLR operation of GPIO22 direction** 0: Keep 1: CLR bits
21	**GPIO21**	GPIO21_DIR	**Bitwise CLR operation of GPIO21 direction** 0: Keep 1: CLR bits
20	**GPIO20**	GPIO20_DIR	**Bitwise CLR operation of GPIO20 direction** 0: Keep 1: CLR bits
19	**GPIO19**	GPIO19_DIR	**Bitwise CLR operation of GPIO19 direction** 0: Keep 1: CLR bits
18	**GPIO18**	GPIO18_DIR	**Bitwise CLR operation of GPIO18 direction** 0: Keep 1: CLR bits
17	**GPIO17**	GPIO17_DIR	**Bitwise CLR operation of GPIO17 direction** 0: Keep 1: CLR bits
16	**GPIO16**	GPIO16_DIR	**Bitwise CLR operation of GPIO16 direction** 0: Keep 1: CLR bits
15	**GPIO15**	GPIO15_DIR	**Bitwise CLR operation of GPIO15 direction** 0: Keep 1: CLR bits
14	**GPIO14**	GPIO14_DIR	**Bitwise CLR operation of GPIO14 direction** 0: Keep

© 2015 - 2017 MediaTek Inc.

This document contains information that is proprietary to MediaTek Inc. (“MediaTek”) and/or its licensor(s).
Any unauthorized use, reproduction or disclosure of this document in whole or in part is strictly prohibited.

Bit(s)	Mnemonic	Name	Description
			1: CLR bits
13	**GPIO13**	GPIO13_DIR	**Bitwise CLR operation of GPIO13 direction** 0: Keep 1: CLR bits
12	**GPIO12**	GPIO12_DIR	**Bitwise CLR operation of GPIO12 direction** 0: Keep 1: CLR bits
11	**GPIO11**	GPIO11_DIR	**Bitwise CLR operation of GPIO11 direction** 0: Keep 1: CLR bits
10	**GPIO10**	GPIO10_DIR	**Bitwise CLR operation of GPIO10 direction** 0: Keep 1: CLR bits
9	**GPIO9**	GPIO9_DIR	**Bitwise CLR operation of GPIO9 direction** 0: Keep 1: CLR bits
8	**GPIO8**	GPIO8_DIR	**Bitwise CLR operation of GPIO8 direction** 0: Keep 1: CLR bits
7	**GPIO7**	GPIO7_DIR	**Bitwise CLR operation of GPIO7 direction** 0: Keep 1: CLR bits
6	**GPIO6**	GPIO6_DIR	**Bitwise CLR operation of GPIO6 direction** 0: Keep 1: CLR bits
5	**GPIO5**	GPIO5_DIR	**Bitwise CLR operation of GPIO5 direction** 0: Keep 1: CLR bits
4	**GPIO4**	GPIO4_DIR	**Bitwise CLR operation of GPIO4 direction** 0: Keep 1: CLR bits
3	**GPIO3**	GPIO3_DIR	**Bitwise CLR operation of GPIO3 direction** 0: Keep 1: CLR bits
2	**GPIO2**	GPIO2_DIR	**Bitwise CLR operation of GPIO2 direction** 0: Keep 1: CLR bits
1	**GPIO1**	GPIO1_DIR	**Bitwise CLR operation of GPIO1 direction** 0: Keep 1: CLR bits
0	**GPIO0**	GPIO0_DIR	**Bitwise CLR operation of GPIO0 direction** 0: Keep 1: CLR bits

A2020010 GPIO_DIR1 GPIO Direction Control 00180088

Bit	31	30	29	28	27	26	25	24	23	22	21	20	19	18	17	16
Name																GPIO 48
Type																RW
Reset																0
Bit	15	14	13	12	11	10	9	8	7	6	5	4	3	2	1	0
Name	GPIO 47	GPIO 46	GPIO 45	GPIO 44	GPIO 43	GPIO 42	GPIO 41	GPIO 40	GPIO 39	GPIO 38	GPIO 37	GPIO 36	GPIO 35	GPIO 34	GPIO 33	GPIO 32
Type	RW	RW	RW	RW	RW	RW	RW	RW	RW	RW	RW	RW	RW	RW	RW	RW

© 2015 - 2017 MediaTek Inc.

This document contains information that is proprietary to MediaTek Inc. ("MediaTek") and/or its licensor(s).
Any unauthorized use, reproduction or disclosure of this document in whole or in part is strictly prohibited.

Reset	0	0	0	0	0	0	0	0	1	0	0	0	1	0	0	0

Overview Configures GPIO direction

Bit(s)	Mnemonic	Name	Description
16	**GPIO48**	GPIO48_DIR	**GPIO48 direction control** 0: GPIO as input 1: GPIO as output
15	**GPIO47**	GPIO47_DIR	**GPIO47 direction control** 0: GPIO as input 1: GPIO as output
14	**GPIO46**	GPIO46_DIR	**GPIO46 direction control** 0: GPIO as input 1: GPIO as output
13	**GPIO45**	GPIO45_DIR	**GPIO45 direction control** 0: GPIO as input 1: GPIO as output
12	**GPIO44**	GPIO44_DIR	**GPIO44 direction control** 0: GPIO as input 1: GPIO as output
11	**GPIO43**	GPIO43_DIR	**GPIO43 direction control** 0: GPIO as input 1: GPIO as output
10	**GPIO42**	GPIO42_DIR	**GPIO42 direction control** 0: GPIO as input 1: GPIO as output
9	**GPIO41**	GPIO41_DIR	**GPIO41 direction control** 0: GPIO as input 1: GPIO as output
8	**GPIO40**	GPIO40_DIR	**GPIO40 direction control** 0: GPIO as input 1: GPIO as output
7	**GPIO39**	GPIO39_DIR	**GPIO39 direction control** 0: GPIO as input 1: GPIO as output
6	**GPIO38**	GPIO38_DIR	**GPIO38 direction control** 0: GPIO as input 1: GPIO as output
5	**GPIO37**	GPIO37_DIR	**GPIO37 direction control** 0: GPIO as input 1: GPIO as output
4	**GPIO36**	GPIO36_DIR	**GPIO36 direction control** 0: GPIO as input 1: GPIO as output
3	**GPIO35**	GPIO35_DIR	**GPIO35 direction control** 0: GPIO as input 1: GPIO as output
2	**GPIO34**	GPIO34_DIR	**GPIO34 direction control** 0: GPIO as input 1: GPIO as output
1	**GPIO33**	GPIO33_DIR	**GPIO33 direction control** 0: GPIO as input 1: GPIO as output
0	**GPIO32**	GPIO32_DIR	**GPIO32 direction control** 0: GPIO as input

© 2015 - 2017 MediaTek Inc.

This document contains information that is proprietary to MediaTek Inc. (“MediaTek”) and/or its licensor(s).
Any unauthorized use, reproduction or disclosure of this document in whole or in part is strictly prohibited.

Bit(s)	Mnemonic	Name	Description
			1: GPIO as output

A2020014 **GPIO_DIR1_SET** **GPIO Direction Control** **00000000**

Bit	31	30	29	28	27	26	25	24	23	22	21	20	19	18	17	16
Name																GPIO48
Type																WO
Reset																0
Bit	15	14	13	12	11	10	9	8	7	6	5	4	3	2	1	0
Name	GPIO47	GPIO46	GPIO45	GPIO44	GPIO43	GPIO42	GPIO41	GPIO40	GPIO39	GPIO38	GPIO37	GPIO36	GPIO35	GPIO34	GPIO33	GPIO32
Type	WO	WO	WO	WO	WO	WO	WO	WO	WO	WO	WO	WO	WO	WO	WO	WO
Reset	0	0	0	0	0	0	0	0	0	0	0	0	0	0	0	0

Overview For bitwise access of GPIO_DIR1

Bit(s)	Mnemonic	Name	Description
16	**GPIO48**	GPIO48_DIR	**Bitwise SET operation of GPIO48 direction** 0: Keep 1: SET bits
15	**GPIO47**	GPIO47_DIR	**Bitwise SET operation of GPIO47 direction** 0: Keep 1: SET bits
14	**GPIO46**	GPIO46_DIR	**Bitwise SET operation of GPIO46 direction** 0: Keep 1: SET bits
13	**GPIO45**	GPIO45_DIR	**Bitwise SET operation of GPIO45 direction** 0: Keep 1: SET bits
12	**GPIO44**	GPIO44_DIR	**Bitwise SET operation of GPIO44 direction** 0: Keep 1: SET bits
11	**GPIO43**	GPIO43_DIR	**Bitwise SET operation of GPIO43 direction** 0: Keep 1: SET bits
10	**GPIO42**	GPIO42_DIR	**Bitwise SET operation of GPIO42 direction** 0: Keep 1: SET bits
9	**GPIO41**	GPIO41_DIR	**Bitwise SET operation of GPIO41 direction** 0: Keep 1: SET bits
8	**GPIO40**	GPIO40_DIR	**Bitwise SET operation of GPIO40 direction** 0: Keep 1: SET bits
7	**GPIO39**	GPIO39_DIR	**Bitwise SET operation of GPIO39 direction** 0: Keep 1: SET bits
6	**GPIO38**	GPIO38_DIR	**Bitwise SET operation of GPIO38 direction** 0: Keep 1: SET bits
5	**GPIO37**	GPIO37_DIR	**Bitwise SET operation of GPIO37 direction** 0: Keep 1: SET bits

© 2015 - 2017 MediaTek Inc.

This document contains information that is proprietary to MediaTek Inc. ("MediaTek") and/or its licensor(s).
Any unauthorized use, reproduction or disclosure of this document in whole or in part is strictly prohibited.

Bit(s)	Mnemonic	Name	Description
4	**GPIO36**	GPIO36_DIR	**Bitwise SET operation of GPIO36 direction** 0: Keep 1: SET bits
3	**GPIO35**	GPIO35_DIR	**Bitwise SET operation of GPIO35 direction** 0: Keep 1: SET bits
2	**GPIO34**	GPIO34_DIR	**Bitwise SET operation of GPIO34 direction** 0: Keep 1: SET bits
1	**GPIO33**	GPIO33_DIR	**Bitwise SET operation of GPIO33 direction** 0: Keep 1: SET bits
0	**GPIO32**	GPIO32_DIR	**Bitwise SET operation of GPIO32 direction** 0: Keep 1: SET bits

A2020018 **GPIO_DIR1_CLR** **GPIO Direction Control** **00000000**

Bit	31	30	29	28	27	26	25	24	23	22	21	20	19	18	17	16
Name																GPIO 48
Type																WO
Reset																0
Bit	15	14	13	12	11	10	9	8	7	6	5	4	3	2	1	0
Name	GPIO 47	GPIO 46	GPIO 45	GPIO 44	GPIO 43	GPIO 42	GPIO 41	GPIO 40	GPIO 39	GPIO 38	GPIO 37	GPIO 36	GPIO 35	GPIO 34	GPIO 33	GPIO 32
Type	WO	WO	WO	WO	WO	WO	WO	WO	WO	WO	WO	WO	WO	WO	WO	WO
Reset	0	0	0	0	0	0	0	0	0	0	0	0	0	0	0	0

Overview For bitwise access of GPIO_DIR1

Bit(s)	Mnemonic	Name	Description
16	**GPIO48**	GPIO48_DIR	**Bitwise CLR operation of GPIO48 direction** 0: Keep 1: CLR bits
15	**GPIO47**	GPIO47_DIR	**Bitwise CLR operation of GPIO47 direction** 0: Keep 1: CLR bits
14	**GPIO46**	GPIO46_DIR	**Bitwise CLR operation of GPIO46 direction** 0: Keep 1: CLR bits
13	**GPIO45**	GPIO45_DIR	**Bitwise CLR operation of GPIO45 direction** 0: Keep 1: CLR bits
12	**GPIO44**	GPIO44_DIR	**Bitwise CLR operation of GPIO44 direction** 0: Keep 1: CLR bits
11	**GPIO43**	GPIO43_DIR	**Bitwise CLR operation of GPIO43 direction** 0: Keep 1: CLR bits
10	**GPIO42**	GPIO42_DIR	**Bitwise CLR operation of GPIO42 direction** 0: Keep 1: CLR bits

© 2015 - 2017 MediaTek Inc.

This document contains information that is proprietary to MediaTek Inc. (“MediaTek”) and/or its licensor(s).
Any unauthorized use, reproduction or disclosure of this document in whole or in part is strictly prohibited.

Bit(s)	Mnemonic	Name	Description
9	**GPIO41**	GPIO41_DIR	**Bitwise CLR operation of GPIO41 direction** 0: Keep 1: CLR bits
8	**GPIO40**	GPIO40_DIR	**Bitwise CLR operation of GPIO40 direction** 0: Keep 1: CLR bits
7	**GPIO39**	GPIO39_DIR	**Bitwise CLR operation of GPIO39 direction** 0: Keep 1: CLR bits
6	**GPIO38**	GPIO38_DIR	**Bitwise CLR operation of GPIO38 direction** 0: Keep 1: CLR bits
5	**GPIO37**	GPIO37_DIR	**Bitwise CLR operation of GPIO37 direction** 0: Keep 1: CLR bits
4	**GPIO36**	GPIO36_DIR	**Bitwise CLR operation of GPIO36 direction** 0: Keep 1: CLR bits
3	**GPIO35**	GPIO35_DIR	**Bitwise CLR operation of GPIO35 direction** 0: Keep 1: CLR bits
2	**GPIO34**	GPIO34_DIR	**Bitwise CLR operation of GPIO34 direction** 0: Keep 1: CLR bits
1	**GPIO33**	GPIO33_DIR	**Bitwise CLR operation of GPIO33 direction** 0: Keep 1: CLR bits
0	**GPIO32**	GPIO32_DIR	**Bitwise CLR operation of GPIO32 direction** 0: Keep 1: CLR bits

A2020100 **GPIO_PULLEN0** **GPIO Pull-up/down Enable Control** **0000040F**

Bit	31	30	29	28	27	26	25	24	23	22	21	20	19	18	17	16
Name																
Type																
Reset																
Bit	15	14	13	12	11	10	9	8	7	6	5	4	3	2	1	0
Name						**GPIO10**							**GPIO3**	**GPIO2**	**GPIO1**	**GPIO0**
Type						RW							RW	RW	RW	RW
Reset						1							1	1	1	1

Overview Configures GPIO pull enabling

Bit(s)	Mnemonic	Name	Description
10	**GPIO10**	GPIO10_PULLEN	**GPIO10 PULLEN** 0: Disable 1: Enable
3	**GPIO3**	GPIO3_PULLEN	**GPIO3 PULLEN** 0: Disable 1: Enable
2	**GPIO2**	GPIO2_PULLEN	**GPIO2 PULLEN**

© 2015 - 2017 MediaTek Inc.

This document contains information that is proprietary to MediaTek Inc. ("MediaTek") and/or its licensor(s).
Any unauthorized use, reproduction or disclosure of this document in whole or in part is strictly prohibited.

Bit(s)	Mnemonic	Name	Description
			0: Disable 1: Enable
1	**GPIO1**	GPIO1_PULLEN	**GPIO1 PULLEN** 0: Disable 1: Enable
0	**GPIO0**	GPIO0_PULLEN	**GPIO0 PULLEN** 0: Disable 1: Enable

A2020104 GPIO_PULLEN0_SET GPIO Pull-up/down Enable Control 00000000

Bit	31	30	29	28	27	26	25	24	23	22	21	20	19	18	17	16
Name																
Type																
Reset																
Bit	15	14	13	12	11	10	9	8	7	6	5	4	3	2	1	0
Name						GPIO10							GPIO3	GPIO2	GPIO1	GPIO0
Type						WO							WO	WO	WO	WO
Reset						0							0	0	0	0

Overview For bitwise access of GPIO_PULLEN0

Bit(s)	Mnemonic	Name	Description
10	**GPIO10**	GPIO10_PULLEN	**Bitwise SET operation of GPIO10 PULLEN_SET** 0: Keep 1: SET bits
3	**GPIO3**	GPIO3_PULLEN	**Bitwise SET operation of GPIO3 PULLEN_SET** 0: Keep 1: SET bits
2	**GPIO2**	GPIO2_PULLEN	**Bitwise SET operation of GPIO2 PULLEN_SET** 0: Keep 1: SET bits
1	**GPIO1**	GPIO1_PULLEN	**Bitwise SET operation of GPIO1 PULLEN_SET** 0: Keep 1: SET bits
0	**GPIO0**	GPIO0_PULLEN	**Bitwise SET operation of GPIO0 PULLEN_SET** 0: Keep 1: SET bits

A2020108 GPIO_PULLEN0_CLR GPIO Pull-up/down Enable Control 00000000

Bit	31	30	29	28	27	26	25	24	23	22	21	20	19	18	17	16
Name																
Type																
Reset																
Bit	15	14	13	12	11	10	9	8	7	6	5	4	3	2	1	0
Name						GPIO10							GPIO3	GPIO2	GPIO1	GPIO0
Type						WO							WO	WO	WO	WO
Reset						0							0	0	0	0

Overview For bitwise access of GPIO_PULLEN0

© 2015 - 2017 MediaTek Inc.

This document contains information that is proprietary to MediaTek Inc. ("MediaTek") and/or its licensor(s).
Any unauthorized use, reproduction or disclosure of this document in whole or in part is strictly prohibited.

Bit(s)	Mnemonic	Name	Description
10	**GPIO10**	GPIO10_PULLEN	**Bitwise CLR operation of GPIO10 PULLEN_CLR** 0: Keep 1: CLR bits
3	**GPIO3**	GPIO3_PULLEN	**Bitwise CLR operation of GPIO3 PULLEN_CLR** 0: Keep 1: CLR bits
2	**GPIO2**	GPIO2_PULLEN	**Bitwise CLR operation of GPIO2 PULLEN_CLR** 0: Keep 1: CLR bits
1	**GPIO1**	GPIO1_PULLEN	**Bitwise CLR operation of GPIO1 PULLEN_CLR** 0: Keep 1: CLR bits
0	**GPIO0**	GPIO0_PULLEN	**Bitwise CLR operation of GPIO0 PULLEN_CLR** 0: Keep 1: CLR bits

A2020200 GPIO_DINV0 GPIO Data Inversion Control 00000000

Bit	31	30	29	28	27	26	25	24	23	22	21	20	19	18	17	16
Name	INV31	INV30	INV29	INV28	INV27	INV26	INV25	INV24	INV23	INV22	INV21	INV20	INV19	INV18	INV17	INV16
Type	RW	RW	RW	RW	RW	RW	RW	RW	RW	RW	RW	RW	RW	RW	RW	RW
Reset	0	0	0	0	0	0	0	0	0	0	0	0	0	0	0	0
Bit	15	14	13	12	11	10	9	8	7	6	5	4	3	2	1	0
Name	INV15	INV14	INV13	INV12	INV11	INV10	INV9	INV8	INV7	INV6	INV5	INV4	INV3	INV2	INV1	INV0
Type	RW	RW	RW	RW	RW	RW	RW	RW	RW	RW	RW	RW	RW	RW	RW	RW
Reset	0	0	0	0	0	0	0	0	0	0	0	0	0	0	0	0

Overview Configures GPIO inversion enabling

Bit(s)	Mnemonic	Name	Description
31	**INV31**	GPIO31_DINV	**GPIO31 inversion control** 0: Keep input value 1: Invert input value
30	**INV30**	GPIO30_DINV	**GPIO30 inversion control** 0: Keep input value 1: Invert input value
29	**INV29**	GPIO29_DINV	**GPIO29 inversion control** 0: Keep input value 1: Invert input value
28	**INV28**	GPIO28_DINV	**GPIO28 inversion control** 0: Keep input value 1: Invert input value
27	**INV27**	GPIO27_DINV	**GPIO27 inversion control** 0: Keep input value 1: Invert input value
26	**INV26**	GPIO26_DINV	**GPIO26 inversion control** 0: Keep input value 1: Invert input value
25	**INV25**	GPIO25_DINV	**GPIO25 inversion control** 0: Keep input value 1: Invert input value
24	**INV24**	GPIO24_DINV	**GPIO24 inversion control**

© 2015 - 2017 MediaTek Inc.

This document contains information that is proprietary to MediaTek Inc. (“MediaTek”) and/or its licensor(s).
Any unauthorized use, reproduction or disclosure of this document in whole or in part is strictly prohibited.

Bit(s)	Mnemonic	Name	Description
			0: Keep input value 1: Invert input value
23	**INV23**	GPIO23_DINV	**GPIO23 inversion control** 0: Keep input value 1: Invert input value
22	**INV22**	GPIO22_DINV	**GPIO22 inversion control** 0: Keep input value 1: Invert input value
21	**INV21**	GPIO21_DINV	**GPIO21 inversion control** 0: Keep input value 1: Invert input value
20	**INV20**	GPIO20_DINV	**GPIO20 inversion control** 0: Keep input value 1: Invert input value
19	**INV19**	GPIO19_DINV	**GPIO19 inversion control** 0: Keep input value 1: Invert input value
18	**INV18**	GPIO18_DINV	**GPIO18 inversion control** 0: Keep input value 1: Invert input value
17	**INV17**	GPIO17_DINV	**GPIO17 inversion control** 0: Keep input value 1: Invert input value
16	**INV16**	GPIO16_DINV	**GPIO16 inversion control** 0: Keep input value 1: Invert input value
15	**INV15**	GPIO15_DINV	**GPIO15 inversion control** 0: Keep input value 1: Invert input value
14	**INV14**	GPIO14_DINV	**GPIO14 inversion control** 0: Keep input value 1: Invert input value
13	**INV13**	GPIO13_DINV	**GPIO13 inversion control** 0: Keep input value 1: Invert input value
12	**INV12**	GPIO12_DINV	**GPIO12 inversion control** 0: Keep input value 1: Invert input value
11	**INV11**	GPIO11_DINV	**GPIO11 inversion control** 0: Keep input value 1: Invert input value
10	**INV10**	GPIO10_DINV	**GPIO10 inversion control** 0: Keep input value 1: Invert input value
9	**INV9**	GPIO9_DINV	**GPIO9 inversion control** 0: Keep input value 1: Invert input value
8	**INV8**	GPIO8_DINV	**GPIO8 inversion control** 0: Keep input value 1: Invert input value
7	**INV7**	GPIO7_DINV	**GPIO7 inversion control** 0: Keep input value 1: Invert input value
6	**INV6**	GPIO6_DINV	**GPIO6 inversion control**

© 2015 - 2017 MediaTek Inc.

This document contains information that is proprietary to MediaTek Inc. (“MediaTek”) and/or its licensor(s).
Any unauthorized use, reproduction or disclosure of this document in whole or in part is strictly prohibited.

Bit(s)	Mnemonic	Name	Description
			0: Keep input value 1: Invert input value
5	**INV5**	GPIO5_DINV	**GPIO5 inversion control** 0: Keep input value 1: Invert input value
4	**INV4**	GPIO4_DINV	**GPIO4 inversion control** 0: Keep input value 1: Invert input value
3	**INV3**	GPIO3_DINV	**GPIO3 inversion control** 0: Keep input value 1: Invert input value
2	**INV2**	GPIO2_DINV	**GPIO2 inversion control** 0: Keep input value 1: Invert input value
1	**INV1**	GPIO1_DINV	**GPIO1 inversion control** 0: Keep input value 1: Invert input value
0	**INV0**	GPIO0_DINV	**GPIO0 inversion control** 0: Keep input value 1: Invert input value

A2020204 **GPIO_DINV0_SET** **GPIO Data Inversion Control** **00000000**

Bit	31	30	29	28	27	26	25	24	23	22	21	20	19	18	17	16
Name	**INV31**	**INV30**	**INV29**	**INV28**	**INV27**	**INV26**	**INV25**	**INV24**	**INV23**	**INV22**	**INV21**	**INV20**	**INV19**	**INV18**	**INV17**	**INV16**
Type	WO	WO	WO	WO	WO	WO	WO	WO	WO	WO	WO	WO	WO	WO	WO	WO
Reset	0	0	0	0	0	0	0	0	0	0	0	0	0	0	0	0
Bit	15	14	13	12	11	10	9	8	7	6	5	4	3	2	1	0
Name	**INV15**	**INV14**	**INV13**	**INV12**	**INV11**	**INV10**	**INV9**	**INV8**	**INV7**	**INV6**	**INV5**	**INV4**	**INV3**	**INV2**	**INV1**	**INV0**
Type	WO	WO	WO	WO	WO	WO	WO	WO	WO	WO	WO	WO	WO	WO	WO	WO
Reset	0	0	0	0	0	0	0	0	0	0	0	0	0	0	0	0

Overview For bitwise access of GPIO_DINV0

Bit(s)	Mnemonic	Name	Description
31	**INV31**	GPIO31_DINV	**Bitwise SET operation of GPIO31 inversion control** 0: Keep 1: SET bits
30	**INV30**	GPIO30_DINV	**Bitwise SET operation of GPIO30 inversion control** 0: Keep 1: SET bits
29	**INV29**	GPIO29_DINV	**Bitwise SET operation of GPIO29 inversion control** 0: Keep 1: SET bits
28	**INV28**	GPIO28_DINV	**Bitwise SET operation of GPIO28 inversion control** 0: Keep 1: SET bits
27	**INV27**	GPIO27_DINV	**Bitwise SET operation of GPIO27 inversion control** 0: Keep 1: SET bits
26	**INV26**	GPIO26_DINV	**Bitwise SET operation of GPIO26 inversion control** 0: Keep 1: SET bits

© 2015 - 2017 MediaTek Inc.

This document contains information that is proprietary to MediaTek Inc. ("MediaTek") and/or its licensor(s).
Any unauthorized use, reproduction or disclosure of this document in whole or in part is strictly prohibited.

Bit(s)	Mnemonic	Name	Description
25	**INV25**	GPIO25_DINV	**Bitwise SET operation of GPIO25 inversion control** 0: Keep 1: SET bits
24	**INV24**	GPIO24_DINV	**Bitwise SET operation of GPIO24 inversion control** 0: Keep 1: SET bits
23	**INV23**	GPIO23_DINV	**Bitwise SET operation of GPIO23 inversion control** 0: Keep 1: SET bits
22	**INV22**	GPIO22_DINV	**Bitwise SET operation of GPIO22 inversion control** 0: Keep 1: SET bits
21	**INV21**	GPIO21_DINV	**Bitwise SET operation of GPIO21 inversion control** 0: Keep 1: SET bits
20	**INV20**	GPIO20_DINV	**Bitwise SET operation of GPIO20 inversion control** 0: Keep 1: SET bits
19	**INV19**	GPIO19_DINV	**Bitwise SET operation of GPIO19 inversion control** 0: Keep 1: SET bits
18	**INV18**	GPIO18_DINV	**Bitwise SET operation of GPIO18 inversion control** 0: Keep 1: SET bits
17	**INV17**	GPIO17_DINV	**Bitwise SET operation of GPIO17 inversion control** 0: Keep 1: SET bits
16	**INV16**	GPIO16_DINV	**Bitwise SET operation of GPIO16 inversion control** 0: Keep 1: SET bits
15	**INV15**	GPIO15_DINV	**Bitwise SET operation of GPIO15 inversion control** 0: Keep 1: SET bits
14	**INV14**	GPIO14_DINV	**Bitwise SET operation of GPIO14 inversion control** 0: Keep 1: SET bits
13	**INV13**	GPIO13_DINV	**Bitwise SET operation of GPIO13 inversion control** 0: Keep 1: SET bits
12	**INV12**	GPIO12_DINV	**Bitwise SET operation of GPIO12 inversion control** 0: Keep 1: SET bits
11	**INV11**	GPIO11_DINV	**Bitwise SET operation of GPIO11 inversion control** 0: Keep 1: SET bits
10	**INV10**	GPIO10_DINV	**Bitwise SET operation of GPIO10 inversion control** 0: Keep 1: SET bits
9	**INV9**	GPIO9_DINV	**Bitwise SET operation of GPIO9 inversion control** 0: Keep 1: SET bits
8	**INV8**	GPIO8_DINV	**Bitwise SET operation of GPIO8 inversion control** 0: Keep 1: SET bits

© 2015 - 2017 MediaTek Inc.

This document contains information that is proprietary to MediaTek Inc. (“MediaTek”) and/or its licensor(s).
Any unauthorized use, reproduction or disclosure of this document in whole or in part is strictly prohibited.

Bit(s)	Mnemonic	Name	Description
7	**INV7**	GPIO7_DINV	**Bitwise SET operation of GPIO7 inversion control** 0: Keep 1: SET bits
6	**INV6**	GPIO6_DINV	**Bitwise SET operation of GPIO6 inversion control** 0: Keep 1: SET bits
5	**INV5**	GPIO5_DINV	**Bitwise SET operation of GPIO5 inversion control** 0: Keep 1: SET bits
4	**INV4**	GPIO4_DINV	**Bitwise SET operation of GPIO4 inversion control** 0: Keep 1: SET bits
3	**INV3**	GPIO3_DINV	**Bitwise SET operation of GPIO3 inversion control** 0: Keep 1: SET bits
2	**INV2**	GPIO2_DINV	**Bitwise SET operation of GPIO2 inversion control** 0: Keep 1: SET bits
1	**INV1**	GPIO1_DINV	**Bitwise SET operation of GPIO1 inversion control** 0: Keep 1: SET bits
0	**INV0**	GPIO0_DINV	**Bitwise SET operation of GPIO0 inversion control** 0: Keep 1: SET bits

A2020208 **GPIO_DINV0_CLR** **GPIO Data Inversion Control** **00000000**

Bit	31	30	29	28	27	26	25	24	23	22	21	20	19	18	17	16
Name	INV31	INV30	INV29	INV28	INV27	INV26	INV25	INV24	INV23	INV22	INV21	INV20	INV19	INV18	INV17	INV16
Type	WO	WO	WO	WO	WO	WO	WO	WO	WO	WO	WO	WO	WO	WO	WO	WO
Reset	0	0	0	0	0	0	0	0	0	0	0	0	0	0	0	0
Bit	15	14	13	12	11	10	9	8	7	6	5	4	3	2	1	0
Name	INV15	INV14	INV13	INV12	INV11	INV10	INV9	INV8	INV7	INV6	INV5	INV4	INV3	INV2	INV1	INV0
Type	WO	WO	WO	WO	WO	WO	WO	WO	WO	WO	WO	WO	WO	WO	WO	WO
Reset	0	0	0	0	0	0	0	0	0	0	0	0	0	0	0	0

Overview For bitwise access of GPIO_DINV0

Bit(s)	Mnemonic	Name	Description
31	**INV31**	GPIO31_DINV	**Bitwise CLR operation of GPIO31 inversion control** 0: Keep 1: CLR bits
30	**INV30**	GPIO30_DINV	**Bitwise CLR operation of GPIO30 inversion control** 0: Keep 1: CLR bits
29	**INV29**	GPIO29_DINV	**Bitwise CLR operation of GPIO29 inversion control** 0: Keep 1: CLR bits
28	**INV28**	GPIO28_DINV	**Bitwise CLR operation of GPIO28 inversion control** 0: Keep 1: CLR bits
27	**INV27**	GPIO27_DINV	**Bitwise CLR operation of GPIO27 inversion control**

© 2015 - 2017 MediaTek Inc.

This document contains information that is proprietary to MediaTek Inc. ("MediaTek") and/or its licensor(s).
Any unauthorized use, reproduction or disclosure of this document in whole or in part is strictly prohibited.

Bit(s)	Mnemonic	Name	Description
			0: Keep 1: CLR bits
26	**INV26**	GPIO26_DINV	**Bitwise CLR operation of GPIO26 inversion control** 0: Keep 1: CLR bits
25	**INV25**	GPIO25_DINV	**Bitwise CLR operation of GPIO25 inversion control** 0: Keep 1: CLR bits
24	**INV24**	GPIO24_DINV	**Bitwise CLR operation of GPIO24 inversion control** 0: Keep 1: CLR bits
23	**INV23**	GPIO23_DINV	**Bitwise CLR operation of GPIO23 inversion control** 0: Keep 1: CLR bits
22	**INV22**	GPIO22_DINV	**Bitwise CLR operation of GPIO22 inversion control** 0: Keep 1: CLR bits
21	**INV21**	GPIO21_DINV	**Bitwise CLR operation of GPIO21 inversion control** 0: Keep 1: CLR bits
20	**INV20**	GPIO20_DINV	**Bitwise CLR operation of GPIO20 inversion control** 0: Keep 1: CLR bits
19	**INV19**	GPIO19_DINV	**Bitwise CLR operation of GPIO19 inversion control** 0: Keep 1: CLR bits
18	**INV18**	GPIO18_DINV	**Bitwise CLR operation of GPIO18 inversion control** 0: Keep 1: CLR bits
17	**INV17**	GPIO17_DINV	**Bitwise CLR operation of GPIO17 inversion control** 0: Keep 1: CLR bits
16	**INV16**	GPIO16_DINV	**Bitwise CLR operation of GPIO16 inversion control** 0: Keep 1: CLR bits
15	**INV15**	GPIO15_DINV	**Bitwise CLR operation of GPIO15 inversion control** 0: Keep 1: CLR bits
14	**INV14**	GPIO14_DINV	**Bitwise CLR operation of GPIO14 inversion control** 0: Keep 1: CLR bits
13	**INV13**	GPIO13_DINV	**Bitwise CLR operation of GPIO13 inversion control** 0: Keep 1: CLR bits
12	**INV12**	GPIO12_DINV	**Bitwise CLR operation of GPIO12 inversion control** 0: Keep 1: CLR bits
11	**INV11**	GPIO11_DINV	**Bitwise CLR operation of GPIO11 inversion control** 0: Keep 1: CLR bits
10	**INV10**	GPIO10_DINV	**Bitwise CLR operation of GPIO10 inversion control** 0: Keep 1: CLR bits
9	**INV9**	GPIO9_DINV	**Bitwise CLR operation of GPIO9 inversion control**

© 2015 - 2017 MediaTek Inc.

This document contains information that is proprietary to MediaTek Inc. (“MediaTek”) and/or its licensor(s).
Any unauthorized use, reproduction or disclosure of this document in whole or in part is strictly prohibited.

Bit(s)	Mnemonic	Name	Description
			0: Keep 1: CLR bits
8	**INV8**	GPIO8_DINV	**Bitwise CLR operation of GPIO8 inversion control** 0: Keep 1: CLR bits
7	**INV7**	GPIO7_DINV	**Bitwise CLR operation of GPIO7 inversion control** 0: Keep 1: CLR bits
6	**INV6**	GPIO6_DINV	**Bitwise CLR operation of GPIO6 inversion control** 0: Keep 1: CLR bits
5	**INV5**	GPIO5_DINV	**Bitwise CLR operation of GPIO5 inversion control** 0: Keep 1: CLR bits
4	**INV4**	GPIO4_DINV	**Bitwise CLR operation of GPIO4 inversion control** 0: Keep 1: CLR bits
3	**INV3**	GPIO3_DINV	**Bitwise CLR operation of GPIO3 inversion control** 0: Keep 1: CLR bits
2	**INV2**	GPIO2_DINV	**Bitwise CLR operation of GPIO2 inversion control** 0: Keep 1: CLR bits
1	**INV1**	GPIO1_DINV	**Bitwise CLR operation of GPIO1 inversion control** 0: Keep 1: CLR bits
0	**INV0**	GPIO0_DINV	**Bitwise CLR operation of GPIO0 inversion control** 0: Keep 1: CLR bits

A2020210 GPIO_DINV1 GPIO Data Inversion Control 00000000

Bit	31	30	29	28	27	26	25	24	23	22	21	20	19	18	17	16
Name																INV48
Type																RW
Reset																0
Bit	15	14	13	12	11	10	9	8	7	6	5	4	3	2	1	0
Name	INV47	INV46	INV45	INV44	INV43	INV42	INV41	INV40	INV39	INV38	INV37	INV36	INV35	INV34	INV33	INV32
Type	RW	RW	RW	RW	RW	RW	RW	RW	RW	RW	RW	RW	RW	RW	RW	RW
Reset	0	0	0	0	0	0	0	0	0	0	0	0	0	0	0	0

Overview Configures GPIO inversion enabling

Bit(s)	Mnemonic	Name	Description
16	**INV48**	GPIO48_DINV	**GPIO48 inversion control** 0: Keep input value 1: Invert input value
15	**INV47**	GPIO47_DINV	**GPIO47 inversion control** 0: Keep input value 1: Invert input value
14	**INV46**	GPIO46_DINV	**GPIO46 inversion control** 0: Keep input value 1: Invert input value

© 2015 - 2017 MediaTek Inc.

This document contains information that is proprietary to MediaTek Inc. ("MediaTek") and/or its licensor(s).
Any unauthorized use, reproduction or disclosure of this document in whole or in part is strictly prohibited.

Bit(s)	Mnemonic	Name	Description
13	**INV45**	GPIO45_DINV	**GPIO45 inversion control** 0: Keep input value 1: Invert input value
12	**INV44**	GPIO44_DINV	**GPIO44 inversion control** 0: Keep input value 1: Invert input value
11	**INV43**	GPIO43_DINV	**GPIO43 inversion control** 0: Keep input value 1: Invert input value
10	**INV42**	GPIO42_DINV	**GPIO42 inversion control** 0: Keep input value 1: Invert input value
9	**INV41**	GPIO41_DINV	**GPIO41 inversion control** 0: Keep input value 1: Invert input value
8	**INV40**	GPIO40_DINV	**GPIO40 inversion control** 0: Keep input value 1: Invert input value
7	**INV39**	GPIO39_DINV	**GPIO39 inversion control** 0: Keep input value 1: Invert input value
6	**INV38**	GPIO38_DINV	**GPIO38 inversion control** 0: Keep input value 1: Invert input value
5	**INV37**	GPIO37_DINV	**GPIO37 inversion control** 0: Keep input value 1: Invert input value
4	**INV36**	GPIO36_DINV	**GPIO36 inversion control** 0: Keep input value 1: Invert input value
3	**INV35**	GPIO35_DINV	**GPIO35 inversion control** 0: Keep input value 1: Invert input value
2	**INV34**	GPIO34_DINV	**GPIO34 inversion control** 0: Keep input value 1: Invert input value
1	**INV33**	GPIO33_DINV	**GPIO33 inversion control** 0: Keep input value 1: Invert input value
0	**INV32**	GPIO32_DINV	**GPIO32 inversion control** 0: Keep input value 1: Invert input value

A2020214 **GPIO_DINV1_SET** **GPIO Data Inversion Control** **00000000**

Bit	31	30	29	28	27	26	25	24	23	22	21	20	19	18	17	16
Name																**INV48**
Type																WO
Reset																0
Bit	15	14	13	12	11	10	9	8	7	6	5	4	3	2	1	0
Name	**INV47**	**INV46**	**INV45**	**INV44**	**INV43**	**INV42**	**INV41**	**INV40**	**INV39**	**INV38**	**INV37**	**INV36**	**INV35**	**INV34**	**INV33**	**INV32**
Type	WO	WO	WO	WO	WO	WO	WO	WO	WO	WO	WO	WO	WO	WO	WO	WO

© 2015 - 2017 MediaTek Inc.

This document contains information that is proprietary to MediaTek Inc. ("MediaTek") and/or its licensor(s).
Any unauthorized use, reproduction or disclosure of this document in whole or in part is strictly prohibited.

Reset	0	0	0	0	0	0	0	0	0	0	0	0	0	0	0	0

Overview For bitwise access of GPIO_DINV1

Bit(s)	Mnemonic	Name	Description
16	**INV48**	GPIO48_DINV	**Bitwise SET operation of GPIO48 inversion control** 0: Keep 1: SET bits
15	**INV47**	GPIO47_DINV	**Bitwise SET operation of GPIO47 inversion control** 0: Keep 1: SET bits
14	**INV46**	GPIO46_DINV	**Bitwise SET operation of GPIO46 inversion control** 0: Keep 1: SET bits
13	**INV45**	GPIO45_DINV	**Bitwise SET operation of GPIO45 inversion control** 0: Keep 1: SET bits
12	**INV44**	GPIO44_DINV	**Bitwise SET operation of GPIO44 inversion control** 0: Keep 1: SET bits
11	**INV43**	GPIO43_DINV	**Bitwise SET operation of GPIO43 inversion control** 0: Keep 1: SET bits
10	**INV42**	GPIO42_DINV	**Bitwise SET operation of GPIO42 inversion control** 0: Keep 1: SET bits
9	**INV41**	GPIO41_DINV	**Bitwise SET operation of GPIO41 inversion control** 0: Keep 1: SET bits
8	**INV40**	GPIO40_DINV	**Bitwise SET operation of GPIO40 inversion control** 0: Keep 1: SET bits
7	**INV39**	GPIO39_DINV	**Bitwise SET operation of GPIO39 inversion control** 0: Keep 1: SET bits
6	**INV38**	GPIO38_DINV	**Bitwise SET operation of GPIO38 inversion control** 0: Keep 1: SET bits
5	**INV37**	GPIO37_DINV	**Bitwise SET operation of GPIO37 inversion control** 0: Keep 1: SET bits
4	**INV36**	GPIO36_DINV	**Bitwise SET operation of GPIO36 inversion control** 0: Keep 1: SET bits
3	**INV35**	GPIO35_DINV	**Bitwise SET operation of GPIO35 inversion control** 0: Keep 1: SET bits
2	**INV34**	GPIO34_DINV	**Bitwise SET operation of GPIO34 inversion control** 0: Keep 1: SET bits
1	**INV33**	GPIO33_DINV	**Bitwise SET operation of GPIO33 inversion control** 0: Keep 1: SET bits
0	**INV32**	GPIO32_DINV	**Bitwise SET operation of GPIO32 inversion control** 0: Keep

© 2015 - 2017 MediaTek Inc.

This document contains information that is proprietary to MediaTek Inc. ("MediaTek") and/or its licensor(s).
Any unauthorized use, reproduction or disclosure of this document in whole or in part is strictly prohibited.

Bit(s)	Mnemonic	Name	Description
			1: SET bits

A2020218 **GPIO_DINV1_CLR** **GPIO Data Inversion Control** **00000000**

Bit	31	30	29	28	27	26	25	24	23	22	21	20	19	18	17	16
Name																INV48
Type																WO
Reset																0
Bit	15	14	13	12	11	10	9	8	7	6	5	4	3	2	1	0
Name	INV47	INV46	INV45	INV44	INV43	INV42	INV41	INV40	INV39	INV38	INV37	INV36	INV35	INV34	INV33	INV32
Type	WO	WO	WO	WO	WO	WO	WO	WO	WO	WO	WO	WO	WO	WO	WO	WO
Reset	0	0	0	0	0	0	0	0	0	0	0	0	0	0	0	0

Overview For bitwise access of GPIO_DINV1

Bit(s)	Mnemonic	Name	Description
16	**INV48**	GPIO48_DINV	**Bitwise CLR operation of GPIO48 inversion control** 0: Keep 1: CLR bits
15	**INV47**	GPIO47_DINV	**Bitwise CLR operation of GPIO47 inversion control** 0: Keep 1: CLR bits
14	**INV46**	GPIO46_DINV	**Bitwise CLR operation of GPIO46 inversion control** 0: Keep 1: CLR bits
13	**INV45**	GPIO45_DINV	**Bitwise CLR operation of GPIO45 inversion control** 0: Keep 1: CLR bits
12	**INV44**	GPIO44_DINV	**Bitwise CLR operation of GPIO44 inversion control** 0: Keep 1: CLR bits
11	**INV43**	GPIO43_DINV	**Bitwise CLR operation of GPIO43 inversion control** 0: Keep 1: CLR bits
10	**INV42**	GPIO42_DINV	**Bitwise CLR operation of GPIO42 inversion control** 0: Keep 1: CLR bits
9	**INV41**	GPIO41_DINV	**Bitwise CLR operation of GPIO41 inversion control** 0: Keep 1: CLR bits
8	**INV40**	GPIO40_DINV	**Bitwise CLR operation of GPIO40 inversion control** 0: Keep 1: CLR bits
7	**INV39**	GPIO39_DINV	**Bitwise CLR operation of GPIO39 inversion control** 0: Keep 1: CLR bits
6	**INV38**	GPIO38_DINV	**Bitwise CLR operation of GPIO38 inversion control** 0: Keep 1: CLR bits
5	**INV37**	GPIO37_DINV	**Bitwise CLR operation of GPIO37 inversion control** 0: Keep 1: CLR bits

© 2015 - 2017 MediaTek Inc.

This document contains information that is proprietary to MediaTek Inc. ("MediaTek") and/or its licensor(s).
Any unauthorized use, reproduction or disclosure of this document in whole or in part is strictly prohibited.

Bit(s)	Mnemonic	Name	Description
4	**INV36**	GPIO36_DINV	**Bitwise CLR operation of GPIO36 inversion control** 0: Keep 1: CLR bits
3	**INV35**	GPIO35_DINV	**Bitwise CLR operation of GPIO35 inversion control** 0: Keep 1: CLR bits
2	**INV34**	GPIO34_DINV	**Bitwise CLR operation of GPIO34 inversion control** 0: Keep 1: CLR bits
1	**INV33**	GPIO33_DINV	**Bitwise CLR operation of GPIO33 inversion control** 0: Keep 1: CLR bits
0	**INV32**	GPIO32_DINV	**Bitwise CLR operation of GPIO32 inversion control** 0: Keep 1: CLR bits

A2020300 GPIO_DOUT0 GPIO Output Data Control 02020000

Bit	31	30	29	28	27	26	25	24	23	22	21	20	19	18	17	16
Name	GPIO31	GPIO30	GPIO29	GPIO28	GPIO27	GPIO26	GPIO25	GPIO24	GPIO23	GPIO22	GPIO21	GPIO20	GPIO19	GPIO18	GPIO17	GPIO16
Type	RW	RW	RW	RW	RW	RW	RW	RW	RW	RW	RW	RW	RW	RW	RW	RW
Reset	0	0	0	0	0	0	1	0	0	0	0	0	0	0	1	0
Bit	15	14	13	12	11	10	9	8	7	6	5	4	3	2	1	0
Name	GPIO15	GPIO14	GPIO13	GPIO12	GPIO11	GPIO10	GPIO9	GPIO8	GPIO7	GPIO6	GPIO5	GPIO4	GPIO3	GPIO2	GPIO1	GPIO0
Type	RW	RW	RW	RW	RW	RW	RW	RW	RW	RW	RW	RW	RW	RW	RW	RW
Reset	0	0	0	0	0	0	0	0	0	0	0	0	0	0	0	0

Overview Configures GPIO output value

Bit(s)	Mnemonic	Name	Description
31	**GPIO31**	GPIO31_OUT	**GPIO31 data output value** 0: GPIO output LO 1: GPIO output HI
30	**GPIO30**	GPIO30_OUT	**GPIO30 data output value** 0: GPIO output LO 1: GPIO output HI
29	**GPIO29**	GPIO29_OUT	**GPIO29 data output value** 0: GPIO output LO 1: GPIO output HI
28	**GPIO28**	GPIO28_OUT	**GPIO28 data output value** 0: GPIO output LO 1: GPIO output HI
27	**GPIO27**	GPIO27_OUT	**GPIO27 data output value** 0: GPIO output LO 1: GPIO output HI
26	**GPIO26**	GPIO26_OUT	**GPIO26 data output value** 0: GPIO output LO 1: GPIO output HI
25	**GPIO25**	GPIO25_OUT	**GPIO25 data output value** 0: GPIO output LO 1: GPIO output HI
24	**GPIO24**	GPIO24_OUT	**GPIO24 data output value** 0: GPIO output LO

© 2015 - 2017 MediaTek Inc.

This document contains information that is proprietary to MediaTek Inc. ("MediaTek") and/or its licensor(s).
Any unauthorized use, reproduction or disclosure of this document in whole or in part is strictly prohibited.

Bit(s)	Mnemonic	Name	Description
			1: GPIO output HI
23	**GPIO23**	GPIO23_OUT	**GPIO23 data output value** 0: GPIO output LO 1: GPIO output HI
22	**GPIO22**	GPIO22_OUT	**GPIO22 data output value** 0: GPIO output LO 1: GPIO output HI
21	**GPIO21**	GPIO21_OUT	**GPIO21 data output value** 0: GPIO output LO 1: GPIO output HI
20	**GPIO20**	GPIO20_OUT	**GPIO20 data output value** 0: GPIO output LO 1: GPIO output HI
19	**GPIO19**	GPIO19_OUT	**GPIO19 data output value** 0: GPIO output LO 1: GPIO output HI
18	**GPIO18**	GPIO18_OUT	**GPIO18 data output value** 0: GPIO output LO 1: GPIO output HI
17	**GPIO17**	GPIO17_OUT	**GPIO17 data output value** 0: GPIO output LO 1: GPIO output HI
16	**GPIO16**	GPIO16_OUT	**GPIO16 data output value** 0: GPIO output LO 1: GPIO output HI
15	**GPIO15**	GPIO15_OUT	**GPIO15 data output value** 0: GPIO output LO 1: GPIO output HI
14	**GPIO14**	GPIO14_OUT	**GPIO14 data output value** 0: GPIO output LO 1: GPIO output HI
13	**GPIO13**	GPIO13_OUT	**GPIO13 data output value** 0: GPIO output LO 1: GPIO output HI
12	**GPIO12**	GPIO12_OUT	**GPIO12 data output value** 0: GPIO output LO 1: GPIO output HI
11	**GPIO11**	GPIO11_OUT	**GPIO11 data output value** 0: GPIO output LO 1: GPIO output HI
10	**GPIO10**	GPIO10_OUT	**GPIO10 data output value** 0: GPIO output LO 1: GPIO output HI
9	**GPIO9**	GPIO9_OUT	**GPIO9 data output value** 0: GPIO output LO 1: GPIO output HI
8	**GPIO8**	GPIO8_OUT	**GPIO8 data output value** 0: GPIO output LO 1: GPIO output HI
7	**GPIO7**	GPIO7_OUT	**GPIO7 data output value** 0: GPIO output LO 1: GPIO output HI
6	**GPIO6**	GPIO6_OUT	**GPIO6 data output value** 0: GPIO output LO

© 2015 - 2017 MediaTek Inc.

This document contains information that is proprietary to MediaTek Inc. (“MediaTek”) and/or its licensor(s).
Any unauthorized use, reproduction or disclosure of this document in whole or in part is strictly prohibited.

Bit(s)	Mnemonic	Name	Description
			1: GPIO output HI
5	**GPIO5**	GPIO5_OUT	**GPIO5 data output value** 0: GPIO output LO 1: GPIO output HI
4	**GPIO4**	GPIO4_OUT	**GPIO4 data output value** 0: GPIO output LO 1: GPIO output HI
3	**GPIO3**	GPIO3_OUT	**GPIO3 data output value** 0: GPIO output LO 1: GPIO output HI
2	**GPIO2**	GPIO2_OUT	**GPIO2 data output value** 0: GPIO output LO 1: GPIO output HI
1	**GPIO1**	GPIO1_OUT	**GPIO1 data output value** 0: GPIO output LO 1: GPIO output HI
0	**GPIO0**	GPIO0_OUT	**GPIO0 data output value** 0: GPIO output LO 1: GPIO output HI

A2020304 **GPIO_DOUT0_SET** **GPIO Output Data Control** **00000000**

Bit	31	30	29	28	27	26	25	24	23	22	21	20	19	18	17	16
Name	**GPIO31**	**GPIO30**	**GPIO29**	**GPIO28**	**GPIO27**	**GPIO26**	**GPIO25**	**GPIO24**	**GPIO23**	**GPIO22**	**GPIO21**	**GPIO20**	**GPIO19**	**GPIO18**	**GPIO17**	**GPIO16**
Type	WO	WO	WO	WO	WO	WO	WO	WO	WO	WO	WO	WO	WO	WO	WO	WO
Reset	0	0	0	0	0	0	0	0	0	0	0	0	0	0	0	0
Bit	15	14	13	12	11	10	9	8	7	6	5	4	3	2	1	0
Name	**GPIO15**	**GPIO14**	**GPIO13**	**GPIO12**	**GPIO11**	**GPIO10**	**GPIO9**	**GPIO8**	**GPIO7**	**GPIO6**	**GPIO5**	**GPIO4**	**GPIO3**	**GPIO2**	**GPIO1**	**GPIO0**
Type	WO	WO	WO	WO	WO	WO	WO	WO	WO	WO	WO	WO	WO	WO	WO	WO
Reset	0	0	0	0	0	0	0	0	0	0	0	0	0	0	0	0

Overview For bitwise access of GPIO_DIR0

Bit(s)	Mnemonic	Name	Description
31	**GPIO31**	GPIO31_OUT	**Bitwise SET operation of GPIO31 data output value** 0: Keep 1: SET bits
30	**GPIO30**	GPIO30_OUT	**Bitwise SET operation of GPIO30 data output value** 0: Keep 1: SET bits
29	**GPIO29**	GPIO29_OUT	**Bitwise SET operation of GPIO29 data output value** 0: Keep 1: SET bits
28	**GPIO28**	GPIO28_OUT	**Bitwise SET operation of GPIO28 data output value** 0: Keep 1: SET bits
27	**GPIO27**	GPIO27_OUT	**Bitwise SET operation of GPIO27 data output value** 0: Keep 1: SET bits
26	**GPIO26**	GPIO26_OUT	**Bitwise SET operation of GPIO26 data output value** 0: Keep 1: SET bits

© 2015 - 2017 MediaTek Inc.

This document contains information that is proprietary to MediaTek Inc. ("MediaTek") and/or its licensor(s).
Any unauthorized use, reproduction or disclosure of this document in whole or in part is strictly prohibited.

Bit(s)	Mnemonic	Name	Description
25	**GPIO25**	GPIO25_OUT	**Bitwise SET operation of GPIO25 data output value** 0: Keep 1: SET bits
24	**GPIO24**	GPIO24_OUT	**Bitwise SET operation of GPIO24 data output value** 0: Keep 1: SET bits
23	**GPIO23**	GPIO23_OUT	**Bitwise SET operation of GPIO23 data output value** 0: Keep 1: SET bits
22	**GPIO22**	GPIO22_OUT	**Bitwise SET operation of GPIO22 data output value** 0: Keep 1: SET bits
21	**GPIO21**	GPIO21_OUT	**Bitwise SET operation of GPIO21 data output value** 0: Keep 1: SET bits
20	**GPIO20**	GPIO20_OUT	**Bitwise SET operation of GPIO20 data output value** 0: Keep 1: SET bits
19	**GPIO19**	GPIO19_OUT	**Bitwise SET operation of GPIO19 data output value** 0: Keep 1: SET bits
18	**GPIO18**	GPIO18_OUT	**Bitwise SET operation of GPIO18 data output value** 0: Keep 1: SET bits
17	**GPIO17**	GPIO17_OUT	**Bitwise SET operation of GPIO17 data output value** 0: Keep 1: SET bits
16	**GPIO16**	GPIO16_OUT	**Bitwise SET operation of GPIO16 data output value** 0: Keep 1: SET bits
15	**GPIO15**	GPIO15_OUT	**Bitwise SET operation of GPIO15 data output value** 0: Keep 1: SET bits
14	**GPIO14**	GPIO14_OUT	**Bitwise SET operation of GPIO14 data output value** 0: Keep 1: SET bits
13	**GPIO13**	GPIO13_OUT	**Bitwise SET operation of GPIO13 data output value** 0: Keep 1: SET bits
12	**GPIO12**	GPIO12_OUT	**Bitwise SET operation of GPIO12 data output value** 0: Keep 1: SET bits
11	**GPIO11**	GPIO11_OUT	**Bitwise SET operation of GPIO11 data output value** 0: Keep 1: SET bits
10	**GPIO10**	GPIO10_OUT	**Bitwise SET operation of GPIO10 data output value** 0: Keep 1: SET bits
9	**GPIO9**	GPIO9_OUT	**Bitwise SET operation of GPIO9 data output value** 0: Keep 1: SET bits
8	**GPIO8**	GPIO8_OUT	**Bitwise SET operation of GPIO8 data output value** 0: Keep 1: SET bits

© 2015 - 2017 MediaTek Inc.

This document contains information that is proprietary to MediaTek Inc. (“MediaTek”) and/or its licensor(s).
Any unauthorized use, reproduction or disclosure of this document in whole or in part is strictly prohibited.

Bit(s)	Mnemonic	Name	Description
7	**GPIO7**	GPIO7_OUT	**Bitwise SET operation of GPIO7 data output value** 0: Keep 1: SET bits
6	**GPIO6**	GPIO6_OUT	**Bitwise SET operation of GPIO6 data output value** 0: Keep 1: SET bits
5	**GPIO5**	GPIO5_OUT	**Bitwise SET operation of GPIO5 data output value** 0: Keep 1: SET bits
4	**GPIO4**	GPIO4_OUT	**Bitwise SET operation of GPIO4 data output value** 0: Keep 1: SET bits
3	**GPIO3**	GPIO3_OUT	**Bitwise SET operation of GPIO3 data output value** 0: Keep 1: SET bits
2	**GPIO2**	GPIO2_OUT	**Bitwise SET operation of GPIO2 data output value** 0: Keep 1: SET bits
1	**GPIO1**	GPIO1_OUT	**Bitwise SET operation of GPIO1 data output value** 0: Keep 1: SET bits
0	**GPIO0**	GPIO0_OUT	**Bitwise SET operation of GPIO0 data output value** 0: Keep 1: SET bits

A2020308 **GPIO_DOUT0_CLR** **GPIO Output Data Control** **00000000**

Bit	31	30	29	28	27	26	25	24	23	22	21	20	19	18	17	16
Name	GPIO31	GPIO30	GPIO29	GPIO28	GPIO27	GPIO26	GPIO25	GPIO24	GPIO23	GPIO22	GPIO21	GPIO20	GPIO19	GPIO18	GPIO17	GPIO16
Type	WO	WO	WO	WO	WO	WO	WO	WO	WO	WO	WO	WO	WO	WO	WO	WO
Reset	0	0	0	0	0	0	0	0	0	0	0	0	0	0	0	0
Bit	15	14	13	12	11	10	9	8	7	6	5	4	3	2	1	0
Name	GPIO15	GPIO14	GPIO13	GPIO12	GPIO11	GPIO10	GPIO9	GPIO8	GPIO7	GPIO6	GPIO5	GPIO4	GPIO3	GPIO2	GPIO1	GPIO0
Type	WO	WO	WO	WO	WO	WO	WO	WO	WO	WO	WO	WO	WO	WO	WO	WO
Reset	0	0	0	0	0	0	0	0	0	0	0	0	0	0	0	0

Overview For bitwise access of GPIO_DIR0

Bit(s)	Mnemonic	Name	Description
31	**GPIO31**	GPIO31_OUT	**Bitwise CLR operation of GPIO31 data output value** 0: Keep 1: CLR bits
30	**GPIO30**	GPIO30_OUT	**Bitwise CLR operation of GPIO30 data output value** 0: Keep 1: CLR bits
29	**GPIO29**	GPIO29_OUT	**Bitwise CLR operation of GPIO29 data output value** 0: Keep 1: CLR bits
28	**GPIO28**	GPIO28_OUT	**Bitwise CLR operation of GPIO28 data output value** 0: Keep 1: CLR bits

© 2015 - 2017 MediaTek Inc.

This document contains information that is proprietary to MediaTek Inc. ("MediaTek") and/or its licensor(s).
Any unauthorized use, reproduction or disclosure of this document in whole or in part is strictly prohibited.

Bit(s)	Mnemonic	Name	Description
27	**GPIO27**	GPIO27_OUT	**Bitwise CLR operation of GPIO27 data output value** 0: Keep 1: CLR bits
26	**GPIO26**	GPIO26_OUT	**Bitwise CLR operation of GPIO26 data output value** 0: Keep 1: CLR bits
25	**GPIO25**	GPIO25_OUT	**Bitwise CLR operation of GPIO25 data output value** 0: Keep 1: CLR bits
24	**GPIO24**	GPIO24_OUT	**Bitwise CLR operation of GPIO24 data output value** 0: Keep 1: CLR bits
23	**GPIO23**	GPIO23_OUT	**Bitwise CLR operation of GPIO23 data output value** 0: Keep 1: CLR bits
22	**GPIO22**	GPIO22_OUT	**Bitwise CLR operation of GPIO22 data output value** 0: Keep 1: CLR bits
21	**GPIO21**	GPIO21_OUT	**Bitwise CLR operation of GPIO21 data output value** 0: Keep 1: CLR bits
20	**GPIO20**	GPIO20_OUT	**Bitwise CLR operation of GPIO20 data output value** 0: Keep 1: CLR bits
19	**GPIO19**	GPIO19_OUT	**Bitwise CLR operation of GPIO19 data output value** 0: Keep 1: CLR bits
18	**GPIO18**	GPIO18_OUT	**Bitwise CLR operation of GPIO18 data output value** 0: Keep 1: CLR bits
17	**GPIO17**	GPIO17_OUT	**Bitwise CLR operation of GPIO17 data output value** 0: Keep 1: CLR bits
16	**GPIO16**	GPIO16_OUT	**Bitwise CLR operation of GPIO16 data output value** 0: Keep 1: CLR bits
15	**GPIO15**	GPIO15_OUT	**Bitwise CLR operation of GPIO15 data output value** 0: Keep 1: CLR bits
14	**GPIO14**	GPIO14_OUT	**Bitwise CLR operation of GPIO14 data output value** 0: Keep 1: CLR bits
13	**GPIO13**	GPIO13_OUT	**Bitwise CLR operation of GPIO13 data output value** 0: Keep 1: CLR bits
12	**GPIO12**	GPIO12_OUT	**Bitwise CLR operation of GPIO12 data output value** 0: Keep 1: CLR bits
11	**GPIO11**	GPIO11_OUT	**Bitwise CLR operation of GPIO11 data output value** 0: Keep 1: CLR bits
10	**GPIO10**	GPIO10_OUT	**Bitwise CLR operation of GPIO10 data output value** 0: Keep 1: CLR bits

© 2015 - 2017 MediaTek Inc.

This document contains information that is proprietary to MediaTek Inc. ("MediaTek") and/or its licensor(s).
Any unauthorized use, reproduction or disclosure of this document in whole or in part is strictly prohibited.

Bit(s)	Mnemonic	Name	Description
9	**GPIO9**	GPIO9_OUT	**Bitwise CLR operation of GPIO9 data output value** 0: Keep 1: CLR bits
8	**GPIO8**	GPIO8_OUT	**Bitwise CLR operation of GPIO8 data output value** 0: Keep 1: CLR bits
7	**GPIO7**	GPIO7_OUT	**Bitwise CLR operation of GPIO7 data output value** 0: Keep 1: CLR bits
6	**GPIO6**	GPIO6_OUT	**Bitwise CLR operation of GPIO6 data output value** 0: Keep 1: CLR bits
5	**GPIO5**	GPIO5_OUT	**Bitwise CLR operation of GPIO5 data output value** 0: Keep 1: CLR bits
4	**GPIO4**	GPIO4_OUT	**Bitwise CLR operation of GPIO4 data output value** 0: Keep 1: CLR bits
3	**GPIO3**	GPIO3_OUT	**Bitwise CLR operation of GPIO3 data output value** 0: Keep 1: CLR bits
2	**GPIO2**	GPIO2_OUT	**Bitwise CLR operation of GPIO2 data output value** 0: Keep 1: CLR bits
1	**GPIO1**	GPIO1_OUT	**Bitwise CLR operation of GPIO1 data output value** 0: Keep 1: CLR bits
0	**GPIO0**	GPIO0_OUT	**Bitwise CLR operation of GPIO0 data output value** 0: Keep 1: CLR bits

A2020310 GPIO_DOUT1 GPIO Output Data Control 00000080

Bit	31	30	29	28	27	26	25	24	23	22	21	20	19	18	17	16
Name																GPIO 48
Type																RW
Reset																0
Bit	15	14	13	12	11	10	9	8	7	6	5	4	3	2	1	0
Name	GPIO 47	GPIO 46	GPIO 45	GPIO 44	GPIO 43	GPIO 42	GPIO 41	GPIO 40	GPIO 39	GPIO 38	GPIO 37	GPIO 36	GPIO 35	GPIO 34	GPIO 33	GPIO 32
Type	RW	RW	RW	RW	RW	RW	RW	RW	RW	RW	RW	RW	RW	RW	RW	RW
Reset	0	0	0	0	0	0	0	0	1	0	0	0	0	0	0	0

Overview Configures GPIO output value

Bit(s)	Mnemonic	Name	Description
6	**GPIO48**	GPIO48_OUT	**GPIO48 data output value** 0: GPIO output LO 1: GPIO output HI
15	**GPIO47**	GPIO47_OUT	**GPIO47 data output value** 0: GPIO output LO 1: GPIO output HI
14	**GPIO46**	GPIO46_OUT	**GPIO46 data output value** 0: GPIO output LO

© 2015 - 2017 MediaTek Inc.

This document contains information that is proprietary to MediaTek Inc. ("MediaTek") and/or its licensor(s).
Any unauthorized use, reproduction or disclosure of this document in whole or in part is strictly prohibited.

Bit(s)	Mnemonic	Name	Description
			1: GPIO output HI
13	**GPIO45**	GPIO45_OUT	**GPIO45 data output value** 0: GPIO output LO 1: GPIO output HI
12	**GPIO44**	GPIO44_OUT	**GPIO44 data output value** 0: GPIO output LO 1: GPIO output HI
11	**GPIO43**	GPIO43_OUT	**GPIO43 data output value** 0: GPIO output LO 1: GPIO output HI
10	**GPIO42**	GPIO42_OUT	**GPIO42 data output value** 0: GPIO output LO 1: GPIO output HI
9	**GPIO41**	GPIO41_OUT	**GPIO41 data output value** 0: GPIO output LO 1: GPIO output HI
8	**GPIO40**	GPIO40_OUT	**GPIO40 data output value** 0: GPIO output LO 1: GPIO output HI
7	**GPIO39**	GPIO39_OUT	**GPIO39 data output value** 0: GPIO output LO 1: GPIO output HI
6	**GPIO38**	GPIO38_OUT	**GPIO38 data output value** 0: GPIO output LO 1: GPIO output HI
5	**GPIO37**	GPIO37_OUT	**GPIO37 data output value** 0: GPIO output LO 1: GPIO output HI
4	**GPIO36**	GPIO36_OUT	**GPIO36 data output value** 0: GPIO output LO 1: GPIO output HI
3	**GPIO35**	GPIO35_OUT	**GPIO35 data output value** 0: GPIO output LO 1: GPIO output HI
2	**GPIO34**	GPIO34_OUT	**GPIO34 data output value** 0: GPIO output LO 1: GPIO output HI
1	**GPIO33**	GPIO33_OUT	**GPIO33 data output value** 0: GPIO output LO 1: GPIO output HI
0	**GPIO32**	GPIO32_OUT	**GPIO32 data output value** 0: GPIO output LO 1: GPIO output HI

A2020314 **GPIO_DOUT1_SET** **GPIO Output Data Control** **00000000**

Bit	31	30	29	28	27	26	25	24	23	22	21	20	19	18	17	16
Name																GPIO 48
Type																WO
Reset																0
Bit	15	14	13	12	11	10	9	8	7	6	5	4	3	2	1	0
Name	GPIO 47	GPIO 46	GPIO 45	GPIO 44	GPIO 43	GPIO 42	GPIO 41	GPIO 40	GPIO 39	GPIO 38	GPIO 37	GPIO 36	GPIO 35	GPIO 34	GPIO 33	GPIO 32

© 2015 - 2017 MediaTek Inc.

This document contains information that is proprietary to MediaTek Inc. ("MediaTek") and/or its licensor(s).
Any unauthorized use, reproduction or disclosure of this document in whole or in part is strictly prohibited.

Type	WO	WO	WO	WO	WO	WO	WO	WO	WO	WO	WO	WO	WO	WO	WO	WO
Reset	0	0	0	0	0	0	0	0	0	0	0	0	0	0	0	0

Overview For bitwise access of GPIO_DIR1

Bit(s)	Mnemonic	Name	Description
16	**GPIO48**	GPIO48_OUT	**Bitwise SET operation of GPIO48 data output value** 0: Keep 1: SET bits
15	**GPIO47**	GPIO47_OUT	**Bitwise SET operation of GPIO47 data output value** 0: Keep 1: SET bits
14	**GPIO46**	GPIO46_OUT	**Bitwise SET operation of GPIO46 data output value** 0: Keep 1: SET bits
13	**GPIO45**	GPIO45_OUT	**Bitwise SET operation of GPIO45 data output value** 0: Keep 1: SET bits
12	**GPIO44**	GPIO44_OUT	**Bitwise SET operation of GPIO44 data output value** 0: Keep 1: SET bits
11	**GPIO43**	GPIO43_OUT	**Bitwise SET operation of GPIO43 data output value** 0: Keep 1: SET bits
10	**GPIO42**	GPIO42_OUT	**Bitwise SET operation of GPIO42 data output value** 0: Keep 1: SET bits
9	**GPIO41**	GPIO41_OUT	**Bitwise SET operation of GPIO41 data output value** 0: Keep 1: SET bits
8	**GPIO40**	GPIO40_OUT	**Bitwise SET operation of GPIO40 data output value** 0: Keep 1: SET bits
7	**GPIO39**	GPIO39_OUT	**Bitwise SET operation of GPIO39 data output value** 0: Keep 1: SET bits
6	**GPIO38**	GPIO38_OUT	**Bitwise SET operation of GPIO38 data output value** 0: Keep 1: SET bits
5	**GPIO37**	GPIO37_OUT	**Bitwise SET operation of GPIO37 data output value** 0: Keep 1: SET bits
4	**GPIO36**	GPIO36_OUT	**Bitwise SET operation of GPIO36 data output value** 0: Keep 1: SET bits
3	**GPIO35**	GPIO35_OUT	**Bitwise SET operation of GPIO35 data output value** 0: Keep 1: SET bits
2	**GPIO34**	GPIO34_OUT	**Bitwise SET operation of GPIO34 data output value** 0: Keep 1: SET bits
1	**GPIO33**	GPIO33_OUT	**Bitwise SET operation of GPIO33 data output value** 0: Keep 1: SET bits
0	**GPIO32**	GPIO32_OUT	**Bitwise SET operation of GPIO32 data output value**

© 2015 - 2017 MediaTek Inc.

This document contains information that is proprietary to MediaTek Inc. ("MediaTek") and/or its licensor(s).
Any unauthorized use, reproduction or disclosure of this document in whole or in part is strictly prohibited.

Bit(s)	Mnemonic	Name	Description
			0: Keep 1: SET bits

A2020318 **GPIO_DOUT1_CLR** **GPIO Output Data Control** **00000000**

Bit	31	30	29	28	27	26	25	24	23	22	21	20	19	18	17	16
Name																GPIO48
Type																WO
Reset																0
Bit	15	14	13	12	11	10	9	8	7	6	5	4	3	2	1	0
Name	GPIO47	GPIO46	GPIO45	GPIO44	GPIO43	GPIO42	GPIO41	GPIO40	GPIO39	GPIO38	GPIO37	GPIO36	GPIO35	GPIO34	GPIO33	GPIO32
Type	WO	WO	WO	WO	WO	WO	WO	WO	WO	WO	WO	WO	WO	WO	WO	WO
Reset	0	0	0	0	0	0	0	0	0	0	0	0	0	0	0	0

Overview For bitwise access of GPIO_DIR1

Bit(s)	Mnemonic	Name	Description
16	**GPIO48**	GPIO48_OUT	**Bitwise CLR operation of GPIO48 data output value** 0: Keep 1: CLR bits
15	**GPIO47**	GPIO47_OUT	**Bitwise CLR operation of GPIO47 data output value** 0: Keep 1: CLR bits
14	**GPIO46**	GPIO46_OUT	**Bitwise CLR operation of GPIO46 data output value** 0: Keep 1: CLR bits
13	**GPIO45**	GPIO45_OUT	**Bitwise CLR operation of GPIO45 data output value** 0: Keep 1: CLR bits
12	**GPIO44**	GPIO44_OUT	**Bitwise CLR operation of GPIO44 data output value** 0: Keep 1: CLR bits
11	**GPIO43**	GPIO43_OUT	**Bitwise CLR operation of GPIO43 data output value** 0: Keep 1: CLR bits
10	**GPIO42**	GPIO42_OUT	**Bitwise CLR operation of GPIO42 data output value** 0: Keep 1: CLR bits
9	**GPIO41**	GPIO41_OUT	**Bitwise CLR operation of GPIO41 data output value** 0: Keep 1: CLR bits
8	**GPIO40**	GPIO40_OUT	**Bitwise CLR operation of GPIO40 data output value** 0: Keep 1: CLR bits
7	**GPIO39**	GPIO39_OUT	**Bitwise CLR operation of GPIO39 data output value** 0: Keep 1: CLR bits
6	**GPIO38**	GPIO38_OUT	**Bitwise CLR operation of GPIO38 data output value** 0: Keep 1: CLR bits
5	**GPIO37**	GPIO37_OUT	**Bitwise CLR operation of GPIO37 data output value** 0: Keep

© 2015 - 2017 MediaTek Inc.

This document contains information that is proprietary to MediaTek Inc. ("MediaTek") and/or its licensor(s).
Any unauthorized use, reproduction or disclosure of this document in whole or in part is strictly prohibited.

Bit(s)	Mnemonic	Name	Description
			1: CLR bits
4	**GPIO36**	GPIO36_OUT	**Bitwise CLR operation of GPIO36 data output value** 0: Keep 1: CLR bits
3	**GPIO35**	GPIO35_OUT	**Bitwise CLR operation of GPIO35 data output value** 0: Keep 1: CLR bits
2	**GPIO34**	GPIO34_OUT	**Bitwise CLR operation of GPIO34 data output value** 0: Keep 1: CLR bits
1	**GPIO33**	GPIO33_OUT	**Bitwise CLR operation of GPIO33 data output value** 0: Keep 1: CLR bits
0	**GPIO32**	GPIO32_OUT	**Bitwise CLR operation of GPIO32 data output value** 0: Keep 1: CLR bits

A2020400 GPIO_DIN0 GPIO Input Data Value 00000000

Bit	31	30	29	28	27	26	25	24	23	22	21	20	19	18	17	16
Name	GPIO31	GPIO30	GPIO29	GPIO28	GPIO27	GPIO26	GPIO25	GPIO24	GPIO23	GPIO22	GPIO21	GPIO20	GPIO19	GPIO18	GPIO17	GPIO16
Type	RO	RO	RO	RO	RO	RO	RO	RO	RO	RO	RO	RO	RO	RO	RO	RO
Reset	0	0	0	0	0	0	0	0	0	0	0	0	0	0	0	0
Bit	15	14	13	12	11	10	9	8	7	6	5	4	3	2	1	0
Name	GPIO15	GPIO14	GPIO13	GPIO12	GPIO11	GPIO10	GPIO9	GPIO8	GPIO7	GPIO6	GPIO5	GPIO4	GPIO3	GPIO2	GPIO1	GPIO0
Type	RO	RO	RO	RO	RO	RO	RO	RO	RO	RO	RO	RO	RO	RO	RO	RO
Reset	0	0	0	0	0	0	0	0	0	0	0	0	0	0	0	0

Overview Reads GPIO input value

Bit(s)	Mnemonic	Name	Description
31	**GPIO31**	GPIO31_DIN	**GPIO31 data input value**
30	**GPIO30**	GPIO30_DIN	**GPIO30 data input value**
29	**GPIO29**	GPIO29_DIN	**GPIO29 data input value**
28	**GPIO28**	GPIO28_DIN	**GPIO28 data input value**
27	**GPIO27**	GPIO27_DIN	**GPIO27 data input value**
26	**GPIO26**	GPIO26_DIN	**GPIO26 data input value**
25	**GPIO25**	GPIO25_DIN	**GPIO25 data input value**
24	**GPIO24**	GPIO24_DIN	**GPIO24 data input value**
23	**GPIO23**	GPIO23_DIN	**GPIO23 data input value**
22	**GPIO22**	GPIO22_DIN	**GPIO22 data input value**
21	**GPIO21**	GPIO21_DIN	**GPIO21 data input value**
20	**GPIO20**	GPIO20_DIN	**GPIO20 data input value**
19	**GPIO19**	GPIO19_DIN	**GPIO19 data input value**
18	**GPIO18**	GPIO18_DIN	**GPIO18 data input value**
17	**GPIO17**	GPIO17_DIN	**GPIO17 data input value**
16	**GPIO16**	GPIO16_DIN	**GPIO16 data input value**
15	**GPIO15**	GPIO15_DIN	**GPIO15 data input value**
14	**GPIO14**	GPIO14_DIN	**GPIO14 data input value**

© 2015 - 2017 MediaTek Inc.

This document contains information that is proprietary to MediaTek Inc. ("MediaTek") and/or its licensor(s).
Any unauthorized use, reproduction or disclosure of this document in whole or in part is strictly prohibited.

Bit(s)	Mnemonic	Name	Description
13	**GPIO13**	GPIO13_DIN	**GPIO13 data input value**
12	**GPIO12**	GPIO12_DIN	**GPIO12 data input value**
11	**GPIO11**	GPIO11_DIN	**GPIO11 data input value**
10	**GPIO10**	GPIO10_DIN	**GPIO10 data input value**
9	**GPIO9**	GPIO9_DIN	**GPIO9 data input value**
8	**GPIO8**	GPIO8_DIN	**GPIO8 data input value**
7	**GPIO7**	GPIO7_DIN	**GPIO7 data input value**
6	**GPIO6**	GPIO6_DIN	**GPIO6 data input value**
5	**GPIO5**	GPIO5_DIN	**GPIO5 data input value**
4	**GPIO4**	GPIO4_DIN	**GPIO4 data input value**
3	**GPIO3**	GPIO3_DIN	**GPIO3 data input value**
2	**GPIO2**	GPIO2_DIN	**GPIO2 data input value**
1	**GPIO1**	GPIO1_DIN	**GPIO1 data input value**
0	**GPIO0**	GPIO0_DIN	**GPIO0 data input value**

A2020410 GPIO_DIN1 GPIO Input Data Value 00000000

Bit	31	30	29	28	27	26	25	24	23	22	21	20	19	18	17	16
Name																GPIO 48
Type																RO
Reset																0
Bit	15	14	13	12	11	10	9	8	7	6	5	4	3	2	1	0
Name	GPIO 47	GPIO 46	GPIO 45	GPIO 44	GPIO 43	GPIO 42	GPIO 41	GPIO 40	GPIO 39	GPIO 38	GPIO 37	GPIO 36	GPIO 35	GPIO 34	GPIO 33	GPIO 32
Type	RO	RO	RO	RO	RO	RO	RO	RO	RO	RO	RO	RO	RO	RO	RO	RO
Reset	0	0	0	0	0	0	0	0	0	0	0	0	0	0	0	0

Overview Reads GPIO input value

Bit(s)	Mnemonic	Name	Description
16	**GPIO48**	GPIO48_DIN	**GPIO48 data input value**
15	**GPIO47**	GPIO47_DIN	**GPIO47 data input value**
14	**GPIO46**	GPIO46_DIN	**GPIO46 data input value**
13	**GPIO45**	GPIO45_DIN	**GPIO45 data input value**
12	**GPIO44**	GPIO44_DIN	**GPIO44 data input value**
11	**GPIO43**	GPIO43_DIN	**GPIO43 data input value**
10	**GPIO42**	GPIO42_DIN	**GPIO42 data input value**
9	**GPIO41**	GPIO41_DIN	**GPIO41 data input value**
8	**GPIO40**	GPIO40_DIN	**GPIO40 data input value**
7	**GPIO39**	GPIO39_DIN	**GPIO39 data input value**
6	**GPIO38**	GPIO38_DIN	**GPIO38 data input value**
5	**GPIO37**	GPIO37_DIN	**GPIO37 data input value**
4	**GPIO36**	GPIO36_DIN	**GPIO36 data input value**
3	**GPIO35**	GPIO35_DIN	**GPIO35 data input value**
2	**GPIO34**	GPIO34_DIN	**GPIO34 data input value**
1	**GPIO33**	GPIO33_DIN	**GPIO33 data input value**
0	**GPIO32**	GPIO32_DIN	**GPIO32 data input value**

© 2015 - 2017 MediaTek Inc.

This document contains information that is proprietary to MediaTek Inc. (“MediaTek”) and/or its licensor(s).
Any unauthorized use, reproduction or disclosure of this document in whole or in part is strictly prohibited.

A2020500 **GPIO_PULLSEL0** **GPIO Pullsel Control** **0000040F**

Bit	31	30	29	28	27	26	25	24	23	22	21	20	19	18	17	16
Name																
Type																
Reset																
Bit	15	14	13	12	11	10	9	8	7	6	5	4	3	2	1	0
Name						GPIO10							GPIO3	GPIO2	GPIO1	GPIO0
Type						RW							RW	RW	RW	RW
Reset						1							1	1	1	1

Overview Configures GPIO PUPD selection

Bit(s)	Mnemonic	Name	Description
10	**GPIO10**	GPIO10_PULLSEL	**GPIO10_PULLSEL** 0: Pull down 1: Pull up
3	**GPIO3**	GPIO3_PULLSEL	**GPIO3_PULLSEL** 0: Pull down 1: Pull up
2	**GPIO2**	GPIO2_PULLSEL	**GPIO2_PULLSEL** 0: Pull down 1: Pull up
1	**GPIO1**	GPIO1_PULLSEL	**GPIO1_PULLSEL** 0: Pull down 1: Pull up
0	**GPIO0**	GPIO0_PULLSEL	**GPIO0_PULLSEL** 0: Pull down 1: Pull up

A2020504 **GPIO_PULLSEL0_SET** **GPIO Pullsel Control** **00000000**

Bit	31	30	29	28	27	26	25	24	23	22	21	20	19	18	17	16
Name																
Type																
Reset																
Bit	15	14	13	12	11	10	9	8	7	6	5	4	3	2	1	0
Name						GPIO10							GPIO3	GPIO2	GPIO1	GPIO0
Type						WO							WO	WO	WO	WO
Reset						0							0	0	0	0

Overview For bitwise access of GPIO_PULLSEL0

Bit(s)	Mnemonic	Name	Description
10	**GPIO10**	GPIO10_PULLSEL	**Bitwise SET operation of GPIO10 PULLSEL_SET** 0: Keep 1: SET bits
3	**GPIO3**	GPIO3_PULLSEL	**Bitwise SET operation of GPIO3 PULLSEL_SET** 0: Keep 1: SET bits
2	**GPIO2**	GPIO2_PULLSEL	**Bitwise SET operation of GPIO2 PULLSEL_SET** 0: Keep 1: SET bits

© 2015 - 2017 MediaTek Inc.

This document contains information that is proprietary to MediaTek Inc. ("MediaTek") and/or its licensor(s).
Any unauthorized use, reproduction or disclosure of this document in whole or in part is strictly prohibited.

Bit(s)	Mnemonic	Name	Description
1	**GPIO1**	GPIO1_PULLSEL	**Bitwise SET operation of GPIO1 PULLSEL_SET** 0: Keep 1: SET bits
0	**GPIO0**	GPIO0_PULLSEL	**Bitwise SET operation of GPIO0 PULLSEL_SET** 0: Keep 1: SET bits

A2020508 GPIO_PULLSEL0_CLR GPIO Pullsel Control 00000000

Bit	31	30	29	28	27	26	25	24	23	22	21	20	19	18	17	16
Name																
Type																
Reset																
Bit	15	14	13	12	11	10	9	8	7	6	5	4	3	2	1	0
Name						GPIO10							GPIO3	GPIO2	GPIO1	GPIO0
Type						WO							WO	WO	WO	WO
Reset						0							0	0	0	0

Overview For bitwise access of GPIO_PULLSEL0

Bit(s)	Mnemonic	Name	Description
10	**GPIO10**	GPIO10_PULLSEL	**Bitwise CKR operation of GPIO10 PULLSEL_CLR** 0: Keep 1: CLR bits
3	**GPIO3**	GPIO3_PULLSEL	**Bitwise CKR operation of GPIO3 PULLSEL_CLR** 0: Keep 1: CLR bits
2	**GPIO2**	GPIO2_PULLSEL	**Bitwise CKR operation of GPIO2 PULLSEL_CLR** 0: Keep 1: CLR bits
1	**GPIO1**	GPIO1_PULLSEL	**Bitwise CKR operation of GPIO1 PULLSEL_CLR** 0: Keep 1: CLR bits
0	**GPIO0**	GPIO0_PULLSEL	**Bitwise CKR operation of GPIO0 PULLSEL_CLR** 0: Keep 1: CLR bits

A2020600 GPIO_SMT0 GPIO SMT Control 00000000

Bit	31	30	29	28	27	26	25	24	23	22	21	20	19	18	17	16
Name	GPIO31	GPIO30	GPIO29	GPIO28	GPIO27	GPIO26	GPIO25	GPIO24	GPIO23	GPIO22	GPIO21	GPIO20	GPIO19	GPIO18	GPIO17	GPIO16
Type	RW	RW	RW	RW	RW	RW	RW	RW	RW	RW	RW	RW	RW	RW	RW	RW
Reset	0	0	0	0	0	0	0	0	0	0	0	0	0	0	0	0
Bit	15	14	13	12	11	10	9	8	7	6	5	4	3	2	1	0
Name	GPIO15	GPIO14	GPIO13	GPIO12	GPIO11	GPIO10	GPIO9	GPIO8	GPIO7	GPIO6	GPIO5	GPIO4	GPIO3	GPIO2	GPIO1	GPIO0
Type	RW	RW	RW	RW	RW	RW	RW	RW	RW	RW	RW	RW	RW	RW	RW	RW
Reset	0	0	0	0	0	0	0	0	0	0	0	0	0	0	0	0

Overview Configures GPIO Schmitt trigger control

Bit(s)	Mnemonic	Name	Description

© 2015 - 2017 MediaTek Inc.

This document contains information that is proprietary to MediaTek Inc. ("MediaTek") and/or its licensor(s).
Any unauthorized use, reproduction or disclosure of this document in whole or in part is strictly prohibited.

Bit(s)	Mnemonic	Name	Description
31	**GPIO31**	GPIO31_SMT	**SMT for GPIO31** 0: Disable 1: Enable
30	**GPIO30**	GPIO30_SMT	**SMT for GPIO30** 0: Disable 1: Enable
29	**GPIO29**	GPIO29_SMT	**SMT for GPIO29** 0: Disable 1: Enable
28	**GPIO28**	GPIO28_SMT	**SMT for GPIO28** 0: Disable 1: Enable
27	**GPIO27**	GPIO27_SMT	**SMT for GPIO27** 0: Disable 1: Enable
26	**GPIO26**	GPIO26_SMT	**SMT for GPIO26** 0: Disable 1: Enable
25	**GPIO25**	GPIO25_SMT	**SMT for GPIO25** 0: Disable 1: Enable
24	**GPIO24**	GPIO24_SMT	**SMT for GPIO24** 0: Disable 1: Enable
23	**GPIO23**	GPIO23_SMT	**SMT for GPIO23** 0: Disable 1: Enable
22	**GPIO22**	GPIO22_SMT	**SMT for GPIO22** 0: Disable 1: Enable
21	**GPIO21**	GPIO21_SMT	**SMT for GPIO21** 0: Disable 1: Enable
20	**GPIO20**	GPIO20_SMT	**SMT for GPIO20** 0: Disable 1: Enable
19	**GPIO19**	GPIO19_SMT	**SMT for GPIO19** 0: Disable 1: Enable
18	**GPIO18**	GPIO18_SMT	**SMT for GPIO18** 0: Disable 1: Enable
17	**GPIO17**	GPIO17_SMT	**SMT for GPIO17** 0: Disable 1: Enable
16	**GPIO16**	GPIO16_SMT	**SMT for GPIO16** 0: Disable 1: Enable
15	**GPIO15**	GPIO15_SMT	**SMT for GPIO15** 0: Disable 1: Enable
14	**GPIO14**	GPIO14_SMT	**SMT for GPIO14** 0: Disable 1: Enable

© 2015 - 2017 MediaTek Inc.

This document contains information that is proprietary to MediaTek Inc. (“MediaTek”) and/or its licensor(s).
Any unauthorized use, reproduction or disclosure of this document in whole or in part is strictly prohibited.

Bit(s)	Mnemonic	Name	Description
13	**GPIO13**	GPIO13_SMT	**SMT for GPIO13** 0: Disable 1: Enable
12	**GPIO12**	GPIO12_SMT	**SMT for GPIO12** 0: Disable 1: Enable
11	**GPIO11**	GPIO11_SMT	**SMT for GPIO11** 0: Disable 1: Enable
10	**GPIO10**	GPIO10_SMT	**SMT for GPIO10** 0: Disable 1: Enable
9	**GPIO9**	GPIO9_SMT	**SMT for GPIO9** 0: Disable 1: Enable
8	**GPIO8**	GPIO8_SMT	**SMT for GPIO8** 0: Disable 1: Enable
7	**GPIO7**	GPIO7_SMT	**SMT for GPIO7** 0: Disable 1: Enable
6	**GPIO6**	GPIO6_SMT	**SMT for GPIO6** 0: Disable 1: Enable
5	**GPIO5**	GPIO5_SMT	**SMT for GPIO5** 0: Disable 1: Enable
4	**GPIO4**	GPIO4_SMT	**SMT for GPIO4** 0: Disable 1: Enable
3	**GPIO3**	GPIO3_SMT	**SMT for GPIO3** 0: Disable 1: Enable
2	**GPIO2**	GPIO2_SMT	**SMT for GPIO2** 0: Disable 1: Enable
1	**GPIO1**	GPIO1_SMT	**SMT for GPIO1** 0: Disable 1: Enable
0	**GPIO0**	GPIO0_SMT	**SMT for GPIO0** 0: Disable 1: Enable

A2020604 **GPIO_SMT0_SET** **GPIO SMT Control** **00000000**

Bit	31	30	29	28	27	26	25	24	23	22	21	20	19	18	17	16
Name	**GPIO31**	**GPIO30**	**GPIO29**	**GPIO28**	**GPIO27**	**GPIO26**	**GPIO25**	**GPIO24**	**GPIO23**	**GPIO22**	**GPIO21**	**GPIO20**	**GPIO19**	**GPIO18**	**GPIO17**	**GPIO16**
Type	WO	WO	WO	WO	WO	WO	WO	WO	WO	WO	WO	WO	WO	WO	WO	WO
Reset	0	0	0	0	0	0	0	0	0	0	0	0	0	0	0	0
Bit	15	14	13	12	11	10	9	8	7	6	5	4	3	2	1	0
Name	**GPIO15**	**GPIO14**	**GPIO13**	**GPIO12**	**GPIO11**	**GPIO10**	**GPIO9**	**GPIO8**	**GPIO7**	**GPIO6**	**GPIO5**	**GPIO4**	**GPIO3**	**GPIO2**	**GPIO1**	**GPIO0**
Type	WO	WO	WO	WO	WO	WO	WO	WO	WO	WO	WO	WO	WO	WO	WO	WO

© 2015 - 2017 MediaTek Inc.

This document contains information that is proprietary to MediaTek Inc. (“MediaTek”) and/or its licensor(s).
Any unauthorized use, reproduction or disclosure of this document in whole or in part is strictly prohibited.

Reset	0	0	0	0	0	0	0	0	0	0	0	0	0	0	0	0

Overview For bitwise access of GPIO_SMT0

Bit(s)	Mnemonic	Name	Description
31	**GPIO31**	GPIO31_SMT	**Bitwise SET operation of GPIO31 SMT** 0: Keep 1: SET bits
30	**GPIO30**	GPIO30_SMT	**Bitwise SET operation of GPIO30 SMT** 0: Keep 1: SET bits
29	**GPIO29**	GPIO29_SMT	**Bitwise SET operation of GPIO29 SMT** 0: Keep 1: SET bits
28	**GPIO28**	GPIO28_SMT	**Bitwise SET operation of GPIO28 SMT** 0: Keep 1: SET bits
27	**GPIO27**	GPIO27_SMT	**Bitwise SET operation of GPIO27 SMT** 0: Keep 1: SET bits
26	**GPIO26**	GPIO26_SMT	**Bitwise SET operation of GPIO26 SMT** 0: Keep 1: SET bits
25	**GPIO25**	GPIO25_SMT	**Bitwise SET operation of GPIO25 SMT** 0: Keep 1: SET bits
24	**GPIO24**	GPIO24_SMT	**Bitwise SET operation of GPIO24 SMT** 0: Keep 1: SET bits
23	**GPIO23**	GPIO23_SMT	**Bitwise SET operation of GPIO23 SMT** 0: Keep 1: SET bits
22	**GPIO22**	GPIO22_SMT	**Bitwise SET operation of GPIO22 SMT** 0: Keep 1: SET bits
21	**GPIO21**	GPIO21_SMT	**Bitwise SET operation of GPIO21 SMT** 0: Keep 1: SET bits
20	**GPIO20**	GPIO20_SMT	**Bitwise SET operation of GPIO20 SMT** 0: Keep 1: SET bits
19	**GPIO19**	GPIO19_SMT	**Bitwise SET operation of GPIO19 SMT** 0: Keep 1: SET bits
18	**GPIO18**	GPIO18_SMT	**Bitwise SET operation of GPIO18 SMT** 0: Keep 1: SET bits
17	**GPIO17**	GPIO17_SMT	**Bitwise SET operation of GPIO17 SMT** 0: Keep 1: SET bits
16	**GPIO16**	GPIO16_SMT	**Bitwise SET operation of GPIO16 SMT** 0: Keep 1: SET bits
15	**GPIO15**	GPIO15_SMT	**Bitwise SET operation of GPIO15 SMT** 0: Keep

© 2015 - 2017 MediaTek Inc.

This document contains information that is proprietary to MediaTek Inc. ("MediaTek") and/or its licensor(s).
Any unauthorized use, reproduction or disclosure of this document in whole or in part is strictly prohibited.

Bit(s)	Mnemonic	Name	Description
			1: SET bits
14	**GPIO14**	GPIO14_SMT	**Bitwise SET operation of GPIO14 SMT** 0: Keep 1: SET bits
13	**GPIO13**	GPIO13_SMT	**Bitwise SET operation of GPIO13 SMT** 0: Keep 1: SET bits
12	**GPIO12**	GPIO12_SMT	**Bitwise SET operation of GPIO12 SMT** 0: Keep 1: SET bits
11	**GPIO11**	GPIO11_SMT	**Bitwise SET operation of GPIO11 SMT** 0: Keep 1: SET bits
10	**GPIO10**	GPIO10_SMT	**Bitwise SET operation of GPIO10 SMT** 0: Keep 1: SET bits
9	**GPIO9**	GPIO9_SMT	**Bitwise SET operation of GPIO9 SMT** 0: Keep 1: SET bits
8	**GPIO8**	GPIO8_SMT	**Bitwise SET operation of GPIO8 SMT** 0: Keep 1: SET bits
7	**GPIO7**	GPIO7_SMT	**Bitwise SET operation of GPIO7 SMT** 0: Keep 1: SET bits
6	**GPIO6**	GPIO6_SMT	**Bitwise SET operation of GPIO6 SMT** 0: Keep 1: SET bits
5	**GPIO5**	GPIO5_SMT	**Bitwise SET operation of GPIO5 SMT** 0: Keep 1: SET bits
4	**GPIO4**	GPIO4_SMT	**Bitwise SET operation of GPIO4 SMT** 0: Keep 1: SET bits
3	**GPIO3**	GPIO3_SMT	**Bitwise SET operation of GPIO3 SMT** 0: Keep 1: SET bits
2	**GPIO2**	GPIO2_SMT	**Bitwise SET operation of GPIO2 SMT** 0: Keep 1: SET bits
1	**GPIO1**	GPIO1_SMT	**Bitwise SET operation of GPIO1 SMT** 0: Keep 1: SET bits
0	**GPIO0**	GPIO0_SMT	**Bitwise SET operation of GPIO0 SMT** 0: Keep 1: SET bits

A2020608 **GPIO_SMT0_CLR** **GPIO SMT Control** **00000000**

Bit	31	30	29	28	27	26	25	24	23	22	21	20	19	18	17	16
Name	GPIO31	GPIO30	GPIO29	GPIO28	GPIO27	GPIO26	GPIO25	GPIO24	GPIO23	GPIO22	GPIO21	GPIO20	GPIO19	GPIO18	GPIO17	GPIO16
Type	WO	WO	WO	WO	WO	WO	WO	WO	WO	WO	WO	WO	WO	WO	WO	WO

© 2015 - 2017 MediaTek Inc.

This document contains information that is proprietary to MediaTek Inc. ("MediaTek") and/or its licensor(s).
Any unauthorized use, reproduction or disclosure of this document in whole or in part is strictly prohibited.

Reset	0	0	0	0	0	0	0	0	0	0	0	0	0	0	0	0
Bit	15	14	13	12	11	10	9	8	7	6	5	4	3	2	1	0
Name	GPIO15	GPIO14	GPIO13	GPIO12	GPIO11	GPIO10	GPIO9	GPIO8	GPIO7	GPIO6	GPIO5	GPIO4	GPIO3	GPIO2	GPIO1	GPIO0
Type	WO	WO	WO	WO	WO	WO	WO	WO	WO	WO	WO	WO	WO	WO	WO	WO
Reset	0	0	0	0	0	0	0	0	0	0	0	0	0	0	0	0

Overview For bitwise access of GPIO_SMT0

Bit(s)	Mnemonic	Name	Description
31	**GPIO31**	GPIO31_SMT	**Bitwise CLR operation of GPIO31 SMT** 0: Keep 1: CLR bits
30	**GPIO30**	GPIO30_SMT	**Bitwise CLR operation of GPIO30 SMT** 0: Keep 1: CLR bits
29	**GPIO29**	GPIO29_SMT	**Bitwise CLR operation of GPIO29 SMT** 0: Keep 1: CLR bits
28	**GPIO28**	GPIO28_SMT	**Bitwise CLR operation of GPIO28 SMT** 0: Keep 1: CLR bits
27	**GPIO27**	GPIO27_SMT	**Bitwise CLR operation of GPIO27 SMT** 0: Keep 1: CLR bits
26	**GPIO26**	GPIO26_SMT	**Bitwise CLR operation of GPIO26 SMT** 0: Keep 1: CLR bits
25	**GPIO25**	GPIO25_SMT	**Bitwise CLR operation of GPIO25 SMT** 0: Keep 1: CLR bits
24	**GPIO24**	GPIO24_SMT	**Bitwise CLR operation of GPIO24 SMT** 0: Keep 1: CLR bits
23	**GPIO23**	GPIO23_SMT	**Bitwise CLR operation of GPIO23 SMT** 0: Keep 1: CLR bits
22	**GPIO22**	GPIO22_SMT	**Bitwise CLR operation of GPIO22 SMT** 0: Keep 1: CLR bits
21	**GPIO21**	GPIO21_SMT	**Bitwise CLR operation of GPIO21 SMT** 0: Keep 1: CLR bits
20	**GPIO20**	GPIO20_SMT	**Bitwise CLR operation of GPIO20 SMT** 0: Keep 1: CLR bits
19	**GPIO19**	GPIO19_SMT	**Bitwise CLR operation of GPIO19 SMT** 0: Keep 1: CLR bits
18	**GPIO18**	GPIO18_SMT	**Bitwise CLR operation of GPIO18 SMT** 0: Keep 1: CLR bits
17	**GPIO17**	GPIO17_SMT	**Bitwise CLR operation of GPIO17 SMT** 0: Keep 1: CLR bits
16	**GPIO16**	GPIO16_SMT	**Bitwise CLR operation of GPIO16 SMT**

© 2015 - 2017 MediaTek Inc.

This document contains information that is proprietary to MediaTek Inc. ("MediaTek") and/or its licensor(s).
Any unauthorized use, reproduction or disclosure of this document in whole or in part is strictly prohibited.

Bit(s)	Mnemonic	Name	Description
			0: Keep 1: CLR bits
15	**GPIO15**	GPIO15_SMT	**Bitwise CLR operation of GPIO15 SMT** 0: Keep 1: CLR bits
14	**GPIO14**	GPIO14_SMT	**Bitwise CLR operation of GPIO14 SMT** 0: Keep 1: CLR bits
13	**GPIO13**	GPIO13_SMT	**Bitwise CLR operation of GPIO13 SMT** 0: Keep 1: CLR bits
12	**GPIO12**	GPIO12_SMT	**Bitwise CLR operation of GPIO12 SMT** 0: Keep 1: CLR bits
11	**GPIO11**	GPIO11_SMT	**Bitwise CLR operation of GPIO11 SMT** 0: Keep 1: CLR bits
10	**GPIO10**	GPIO10_SMT	**Bitwise CLR operation of GPIO10 SMT** 0: Keep 1: CLR bits
9	**GPIO9**	GPIO9_SMT	**Bitwise CLR operation of GPIO9 SMT** 0: Keep 1: CLR bits
8	**GPIO8**	GPIO8_SMT	**Bitwise CLR operation of GPIO8 SMT** 0: Keep 1: CLR bits
7	**GPIO7**	GPIO7_SMT	**Bitwise CLR operation of GPIO7 SMT** 0: Keep 1: CLR bits
6	**GPIO6**	GPIO6_SMT	**Bitwise CLR operation of GPIO6 SMT** 0: Keep 1: CLR bits
5	**GPIO5**	GPIO5_SMT	**Bitwise CLR operation of GPIO5 SMT** 0: Keep 1: CLR bits
4	**GPIO4**	GPIO4_SMT	**Bitwise CLR operation of GPIO4 SMT** 0: Keep 1: CLR bits
3	**GPIO3**	GPIO3_SMT	**Bitwise CLR operation of GPIO3 SMT** 0: Keep 1: CLR bits
2	**GPIO2**	GPIO2_SMT	**Bitwise CLR operation of GPIO2 SMT** 0: Keep 1: CLR bits
1	**GPIO1**	GPIO1_SMT	**Bitwise CLR operation of GPIO1 SMT** 0: Keep 1: CLR bits
0	**GPIO0**	GPIO0_SMT	**Bitwise CLR operation of GPIO0 SMT** 0: Keep 1: CLR bits

A2020610 GPIO_SMT1 GPIO SMT Control 00000000

© 2015 - 2017 MediaTek Inc.

This document contains information that is proprietary to MediaTek Inc. (“MediaTek”) and/or its licensor(s).
Any unauthorized use, reproduction or disclosure of this document in whole or in part is strictly prohibited.

Bit	31	30	29	28	27	26	25	24	23	22	21	20	19	18	17	16
Name																GPIO 48
Type																RW
Reset																0
Bit	15	14	13	12	11	10	9	8	7	6	5	4	3	2	1	0
Name	GPIO 47	GPIO 46	GPIO 45	GPIO 44	GPIO 43	GPIO 42	GPIO 41	GPIO 40	GPIO 39	GPIO 38	GPIO 37	GPIO 36	GPIO 35	GPIO 34	GPIO 33	GPIO 32
Type	RW	RW	RW	RW	RW	RW	RW	RW	RW	RW	RW	RW	RW	RW	RW	RW
Reset	0	0	0	0	0	0	0	0	0	0	0	0	0	0	0	0

Overview Configures GPIO Schmitt trigger control

Bit(s)	Mnemonic	Name	Description
16	**GPIO48**	GPIO48_SMT	**SMT for GPIO48** 0: Disable 1: Enable
15	**GPIO47**	GPIO47_SMT	**SMT for GPIO47** 0: Disable 1: Enable
14	**GPIO46**	GPIO46_SMT	**SMT for GPIO46** 0: Disable 1: Enable
13	**GPIO45**	GPIO45_SMT	**SMT for GPIO45** 0: Disable 1: Enable
12	**GPIO44**	GPIO44_SMT	**SMT for GPIO44** 0: Disable 1: Enable
11	**GPIO43**	GPIO43_SMT	**SMT for GPIO43** 0: Disable 1: Enable
10	**GPIO42**	GPIO42_SMT	**SMT for GPIO42** 0: Disable 1: Enable
9	**GPIO41**	GPIO41_SMT	**SMT for GPIO41** 0: Disable 1: Enable
8	**GPIO40**	GPIO40_SMT	**SMT for GPIO40** 0: Disable 1: Enable
7	**GPIO39**	GPIO39_SMT	**SMT for GPIO39** 0: Disable 1: Enable
6	**GPIO38**	GPIO38_SMT	**SMT for GPIO38** 0: Disable 1: Enable
5	**GPIO37**	GPIO37_SMT	**SMT for GPIO37** 0: Disable 1: Enable
4	**GPIO36**	GPIO36_SMT	**SMT for GPIO36** 0: Disable 1: Enable
3	**GPIO35**	GPIO35_SMT	**SMT for GPIO35** 0: Disable 1: Enable
2	**GPIO34**	GPIO34_SMT	**SMT for GPIO34**

© 2015 - 2017 MediaTek Inc.

This document contains information that is proprietary to MediaTek Inc. ("MediaTek") and/or its licensor(s).
Any unauthorized use, reproduction or disclosure of this document in whole or in part is strictly prohibited.

Bit(s)	Mnemonic	Name	Description
			0: Disable 1: Enable
1	**GPIO33**	GPIO33_SMT	**SMT for GPIO33** 0: Disable 1: Enable
0	**GPIO32**	GPIO32_SMT	**SMT for GPIO32** 0: Disable 1: Enable

A2020614 GPIO_SMT1_SET GPIO SMT Control 00000000

Bit	31	30	29	28	27	26	25	24	23	22	21	20	19	18	17	16
Name																**GPIO48**
Type																WO
Reset																0
Bit	15	14	13	12	11	10	9	8	7	6	5	4	3	2	1	0
Name	**GPIO47**	**GPIO46**	**GPIO45**	**GPIO44**	**GPIO43**	**GPIO42**	**GPIO41**	**GPIO40**	**GPIO39**	**GPIO38**	**GPIO37**	**GPIO36**	**GPIO35**	**GPIO34**	**GPIO33**	**GPIO32**
Type	WO	WO	WO	WO	WO	WO	WO	WO	WO	WO	WO	WO	WO	WO	WO	WO
Reset	0	0	0	0	0	0	0	0	0	0	0	0	0	0	0	0

Overview For bitwise access of GPIO_SMT1

Bit(s)	Mnemonic	Name	Description
16	**GPIO48**	GPIO48_SMT	**Bitwise SET operation of GPIO48 SMT** 0: Keep 1: SET bits
15	**GPIO47**	GPIO47_SMT	**Bitwise SET operation of GPIO47 SMT** 0: Keep 1: SET bits
14	**GPIO46**	GPIO46_SMT	**Bitwise SET operation of GPIO46 SMT** 0: Keep 1: SET bits
13	**GPIO45**	GPIO45_SMT	**Bitwise SET operation of GPIO45 SMT** 0: Keep 1: SET bits
12	**GPIO44**	GPIO44_SMT	**Bitwise SET operation of GPIO44 SMT** 0: Keep 1: SET bits
11	**GPIO43**	GPIO43_SMT	**Bitwise SET operation of GPIO43 SMT** 0: Keep 1: SET bits
10	**GPIO42**	GPIO42_SMT	**Bitwise SET operation of GPIO42 SMT** 0: Keep 1: SET bits
9	**GPIO41**	GPIO41_SMT	**Bitwise SET operation of GPIO41 SMT** 0: Keep 1: SET bits
8	**GPIO40**	GPIO40_SMT	**Bitwise SET operation of GPIO40 SMT** 0: Keep 1: SET bits
7	**GPIO39**	GPIO39_SMT	**Bitwise SET operation of GPIO39 SMT** 0: Keep

© 2015 - 2017 MediaTek Inc.

This document contains information that is proprietary to MediaTek Inc. ("MediaTek") and/or its licensor(s).
Any unauthorized use, reproduction or disclosure of this document in whole or in part is strictly prohibited.

Bit(s)	Mnemonic	Name	Description
			1: SET bits
6	**GPIO38**	GPIO38_SMT	**Bitwise SET operation of GPIO38 SMT** 0: Keep 1: SET bits
5	**GPIO37**	GPIO37_SMT	**Bitwise SET operation of GPIO37 SMT** 0: Keep 1: SET bits
4	**GPIO36**	GPIO36_SMT	**Bitwise SET operation of GPIO36 SMT** 0: Keep 1: SET bits
3	**GPIO35**	GPIO35_SMT	**Bitwise SET operation of GPIO35 SMT** 0: Keep 1: SET bits
2	**GPIO34**	GPIO34_SMT	**Bitwise SET operation of GPIO34 SMT** 0: Keep 1: SET bits
1	**GPIO33**	GPIO33_SMT	**Bitwise SET operation of GPIO33 SMT** 0: Keep 1: SET bits
0	**GPIO32**	GPIO32_SMT	**Bitwise SET operation of GPIO32 SMT** 0: Keep 1: SET bits

A2020618 **GPIO_SMT1_CLR** **GPIO SMT Control** **00000000**

Bit	31	30	29	28	27	26	25	24	23	22	21	20	19	18	17	16
Name																GPIO48
Type																WO
Reset																0
Bit	15	14	13	12	11	10	9	8	7	6	5	4	3	2	1	0
Name	GPIO47	GPIO46	GPIO45	GPIO44	GPIO43	GPIO42	GPIO41	GPIO40	GPIO39	GPIO38	GPIO37	GPIO36	GPIO35	GPIO34	GPIO33	GPIO32
Type	WO	WO	WO	WO	WO	WO	WO	WO	WO	WO	WO	WO	WO	WO	WO	WO
Reset	0	0	0	0	0	0	0	0	0	0	0	0	0	0	0	0

Overview For bitwise access of GPIO_SMT1

Bit(s)	Mnemonic	Name	Description
16	**GPIO48**	GPIO48_SMT	**Bitwise CLR operation of GPIO48 SMT** 0: Keep 1: CLR bits
15	**GPIO47**	GPIO47_SMT	**Bitwise CLR operation of GPIO47 SMT** 0: Keep 1: CLR bits
14	**GPIO46**	GPIO46_SMT	**Bitwise CLR operation of GPIO46 SMT** 0: Keep 1: CLR bits
13	**GPIO45**	GPIO45_SMT	**Bitwise CLR operation of GPIO45 SMT** 0: Keep 1: CLR bits
12	**GPIO44**	GPIO44_SMT	**Bitwise CLR operation of GPIO44 SMT** 0: Keep 1: CLR bits

© 2015 - 2017 MediaTek Inc.

This document contains information that is proprietary to MediaTek Inc. ("MediaTek") and/or its licensor(s).
Any unauthorized use, reproduction or disclosure of this document in whole or in part is strictly prohibited.

Bit(s)	Mnemonic	Name	Description
11	**GPIO43**	GPIO43_SMT	**Bitwise CLR operation of GPIO43 SMT** 0: Keep 1: CLR bits
10	**GPIO42**	GPIO42_SMT	**Bitwise CLR operation of GPIO42 SMT** 0: Keep 1: CLR bits
9	**GPIO41**	GPIO41_SMT	**Bitwise CLR operation of GPIO41 SMT** 0: Keep 1: CLR bits
8	**GPIO40**	GPIO40_SMT	**Bitwise CLR operation of GPIO40 SMT** 0: Keep 1: CLR bits
7	**GPIO39**	GPIO39_SMT	**Bitwise CLR operation of GPIO39 SMT** 0: Keep 1: CLR bits
6	**GPIO38**	GPIO38_SMT	**Bitwise CLR operation of GPIO38 SMT** 0: Keep 1: CLR bits
5	**GPIO37**	GPIO37_SMT	**Bitwise CLR operation of GPIO37 SMT** 0: Keep 1: CLR bits
4	**GPIO36**	GPIO36_SMT	**Bitwise CLR operation of GPIO36 SMT** 0: Keep 1: CLR bits
3	**GPIO35**	GPIO35_SMT	**Bitwise CLR operation of GPIO35 SMT** 0: Keep 1: CLR bits
2	**GPIO34**	GPIO34_SMT	**Bitwise CLR operation of GPIO34 SMT** 0: Keep 1: CLR bits
1	**GPIO33**	GPIO33_SMT	**Bitwise CLR operation of GPIO33 SMT** 0: Keep 1: CLR bits
0	**GPIO32**	GPIO32_SMT	**Bitwise CLR operation of GPIO32 SMT** 0: Keep 1: CLR bits

A2020700 GPIO_SR0 GPIO SR Control FFFFFFFF

Bit	31	30	29	28	27	26	25	24	23	22	21	20	19	18	17	16
Name	**GPIO 31**	**GPIO 30**	**GPIO 29**	**GPIO 28**	**GPIO 27**	**GPIO 26**	**GPIO 25**	**GPIO 24**	**GPIO 23**	**GPIO 22**	**GPIO 21**	**GPIO 20**	**GPIO19**	**GPIO18**	**GPIO17**	**GPIO 16**
Type	RW	RW	RW	RW	RW	RW	RW	RW	RW	RW	RW	RW	RW	RW	RW	RW
Reset	1	1	1	1	1	1	1	1	1	1	1	1	1	1	1	1
Bit	15	14	13	12	11	10	9	8	7	6	5	4	3	2	1	0
Name	**GPIO 15**	**GPIO14**	**GPIO13**	**GPIO12**	**GPIO11**	**GPIO10**	**GPIO 9**	**GPIO 8**	**GPIO 7**	**GPIO 6**	**GPIO 5**	**GPIO 4**	**GPIO 3**	**GPIO 2**	**GPIO1**	**GPIO 0**
Type	RW	RW	RW	RW	RW	RW	RW	RW	RW	RW	RW	RW	RW	RW	RW	RW
Reset	1	1	1	1	1	1	1	1	1	1	1	1	1	1	1	1

Overview Configures GPIO slew rate control

Bit(s)	Mnemonic	Name	Description
31	**GPIO31**	GPIO31_SR	**SR for GPIO31** 0: Disable

© 2015 - 2017 MediaTek Inc.

This document contains information that is proprietary to MediaTek Inc. ("MediaTek") and/or its licensor(s).
Any unauthorized use, reproduction or disclosure of this document in whole or in part is strictly prohibited.

Bit(s)	Mnemonic	Name	Description
			1: Enable
30	**GPIO30**	GPIO30_SR	**SR for GPIO30** 0: Disable 1: Enable
29	**GPIO29**	GPIO29_SR	**SR for GPIO29** 0: Disable 1: Enable
28	**GPIO28**	GPIO28_SR	**SR for GPIO28** 0: Disable 1: Enable
27	**GPIO27**	GPIO27_SR	**SR for GPIO27** 0: Disable 1: Enable
26	**GPIO26**	GPIO26_SR	**SR for GPIO26** 0: Disable 1: Enable
25	**GPIO25**	GPIO25_SR	**SR for GPIO25** 0: Disable 1: Enable
24	**GPIO24**	GPIO24_SR	**SR for GPIO24** 0: Disable 1: Enable
23	**GPIO23**	GPIO23_SR	**SR for GPIO23** 0: Disable 1: Enable
22	**GPIO22**	GPIO22_SR	**SR for GPIO22** 0: Disable 1: Enable
21	**GPIO21**	GPIO21_SR	**SR for GPIO21** 0: Disable 1: Enable
20	**GPIO20**	GPIO20_SR	**SR for GPIO20** 0: Disable 1: Enable
19	**GPIO19**	GPIO19_SR	**SR for GPIO19** 0: Disable 1: Enable
18	**GPIO18**	GPIO18_SR	**SR for GPIO18** 0: Disable 1: Enable
17	**GPIO17**	GPIO17_SR	**SR for GPIO17** 0: Disable 1: Enable
16	**GPIO16**	GPIO16_SR	**SR for GPIO16** 0: Disable 1: Enable
15	**GPIO15**	GPIO15_SR	**SR for GPIO15** 0: Disable 1: Enable
14	**GPIO14**	GPIO14_SR	**SR for GPIO14** 0: Disable 1: Enable
13	**GPIO13**	GPIO13_SR	**SR for GPIO13** 0: Disable

© 2015 - 2017 MediaTek Inc.

This document contains information that is proprietary to MediaTek Inc. (“MediaTek”) and/or its licensor(s).
Any unauthorized use, reproduction or disclosure of this document in whole or in part is strictly prohibited.

Bit(s)	Mnemonic	Name	Description
			1: Enable
12	**GPIO12**	GPIO12_SR	**SR for GPIO12** 0: Disable 1: Enable
11	**GPIO11**	GPIO11_SR	**SR for GPIO11** 0: Disable 1: Enable
10	**GPIO10**	GPIO10_SR	**SR for GPIO10** 0: Disable 1: Enable
9	**GPIO9**	GPIO9_SR	**SR for GPIO9** 0: Disable 1: Enable
8	**GPIO8**	GPIO8_SR	**SR for GPIO8** 0: Disable 1: Enable
7	**GPIO7**	GPIO7_SR	**SR for GPIO7** 0: Disable 1: Enable
6	**GPIO6**	GPIO6_SR	**SR for GPIO6** 0: Disable 1: Enable
5	**GPIO5**	GPIO5_SR	**SR for GPIO5** 0: Disable 1: Enable
4	**GPIO4**	GPIO4_SR	**SR for GPIO4** 0: Disable 1: Enable
3	**GPIO3**	GPIO3_SR	**SR for GPIO3** 0: Disable 1: Enable
2	**GPIO2**	GPIO2_SR	**SR for GPIO2** 0: Disable 1: Enable
1	**GPIO1**	GPIO1_SR	**SR for GPIO1** 0: Disable 1: Enable
0	**GPIO0**	GPIO0_SR	**SR for GPIO0** 0: Disable 1: Enable

A2020704 **GPIO_SR0_SET** **GPIO SR Control** **00000000**

Bit	31	30	29	28	27	26	25	24	23	22	21	20	19	18	17	16
Name	**GPIO31**	**GPIO30**	**GPIO29**	**GPIO28**	**GPIO27**	**GPIO26**	**GPIO25**	**GPIO24**	**GPIO23**	**GPIO22**	**GPIO21**	**GPIO20**	**GPIO19**	**GPIO18**	**GPIO17**	**GPIO16**
Type	WO	WO	WO	WO	WO	WO	WO	WO	WO	WO	WO	WO	WO	WO	WO	WO
Reset	0	0	0	0	0	0	0	0	0	0	0	0	0	0	0	0
Bit	15	14	13	12	11	10	9	8	7	6	5	4	3	2	1	0
Name	**GPIO15**	**GPIO14**	**GPIO13**	**GPIO12**	**GPIO11**	**GPIO10**	**GPIO9**	**GPIO8**	**GPIO7**	**GPIO6**	**GPIO5**	**GPIO4**	**GPIO3**	**GPIO2**	**GPIO1**	**GPIO0**
Type	WO	WO	WO	WO	WO	WO	WO	WO	WO	WO	WO	WO	WO	WO	WO	WO
Reset	0	0	0	0	0	0	0	0	0	0	0	0	0	0	0	0

© 2015 - 2017 MediaTek Inc.

This document contains information that is proprietary to MediaTek Inc. (“MediaTek”) and/or its licensor(s).
Any unauthorized use, reproduction or disclosure of this document in whole or in part is strictly prohibited.

Overview For bitwise access of GPIO_SR0

Bit(s)	Mnemonic	Name	Description
31	**GPIO31**	GPIO31_SR	**Bitwise SET operation of GPIO31 SR** 0: Keep 1: SET bits
30	**GPIO30**	GPIO30_SR	**Bitwise SET operation of GPIO30 SR** 0: Keep 1: SET bits
29	**GPIO29**	GPIO29_SR	**Bitwise SET operation of GPIO29 SR** 0: Keep 1: SET bits
28	**GPIO28**	GPIO28_SR	**Bitwise SET operation of GPIO28 SR** 0: Keep 1: SET bits
27	**GPIO27**	GPIO27_SR	**Bitwise SET operation of GPIO27 SR** 0: Keep 1: SET bits
26	**GPIO26**	GPIO26_SR	**Bitwise SET operation of GPIO26 SR** 0: Keep 1: SET bits
25	**GPIO25**	GPIO25_SR	**Bitwise SET operation of GPIO25 SR** 0: Keep 1: SET bits
24	**GPIO24**	GPIO24_SR	**Bitwise SET operation of GPIO24 SR** 0: Keep 1: SET bits
23	**GPIO23**	GPIO23_SR	**Bitwise SET operation of GPIO23 SR** 0: Keep 1: SET bits
22	**GPIO22**	GPIO22_SR	**Bitwise SET operation of GPIO22 SR** 0: Keep 1: SET bits
21	**GPIO21**	GPIO21_SR	**Bitwise SET operation of GPIO21 SR** 0: Keep 1: SET bits
20	**GPIO20**	GPIO20_SR	**Bitwise SET operation of GPIO20 SR** 0: Keep 1: SET bits
19	**GPIO19**	GPIO19_SR	**Bitwise SET operation of GPIO19 SR** 0: Keep 1: SET bits
18	**GPIO18**	GPIO18_SR	**Bitwise SET operation of GPIO18 SR** 0: Keep 1: SET bits
17	**GPIO17**	GPIO17_SR	**Bitwise SET operation of GPIO17 SR** 0: Keep 1: SET bits
16	**GPIO16**	GPIO16_SR	**Bitwise SET operation of GPIO16 SR** 0: Keep 1: SET bits
15	**GPIO15**	GPIO15_SR	**Bitwise SET operation of GPIO15 SR** 0: Keep 1: SET bits
14	**GPIO14**	GPIO14_SR	**Bitwise SET operation of GPIO14 SR**

© 2015 - 2017 MediaTek Inc.

This document contains information that is proprietary to MediaTek Inc. (“MediaTek”) and/or its licensor(s).
Any unauthorized use, reproduction or disclosure of this document in whole or in part is strictly prohibited.

Bit(s)	Mnemonic	Name	Description
			0: Keep 1: SET bits
13	**GPIO13**	GPIO13_SR	**Bitwise SET operation of GPIO13 SR** 0: Keep 1: SET bits
12	**GPIO12**	GPIO12_SR	**Bitwise SET operation of GPIO12 SR** 0: Keep 1: SET bits
11	**GPIO11**	GPIO11_SR	**Bitwise SET operation of GPIO11 SR** 0: Keep 1: SET bits
10	**GPIO10**	GPIO10_SR	**Bitwise SET operation of GPIO10 SR** 0: Keep 1: SET bits
9	**GPIO9**	GPIO9_SR	**Bitwise SET operation of GPIO9 SR** 0: Keep 1: SET bits
8	**GPIO8**	GPIO8_SR	**Bitwise SET operation of GPIO8 SR** 0: Keep 1: SET bits
7	**GPIO7**	GPIO7_SR	**Bitwise SET operation of GPIO7 SR** 0: Keep 1: SET bits
6	**GPIO6**	GPIO6_SR	**Bitwise SET operation of GPIO6 SR** 0: Keep 1: SET bits
5	**GPIO5**	GPIO5_SR	**Bitwise SET operation of GPIO5 SR** 0: Keep 1: SET bits
4	**GPIO4**	GPIO4_SR	**Bitwise SET operation of GPIO4 SR** 0: Keep 1: SET bits
3	**GPIO3**	GPIO3_SR	**Bitwise SET operation of GPIO3 SR** 0: Keep 1: SET bits
2	**GPIO2**	GPIO2_SR	**Bitwise SET operation of GPIO2 SR** 0: Keep 1: SET bits
1	**GPIO1**	GPIO1_SR	**Bitwise SET operation of GPIO1 SR** 0: Keep 1: SET bits
0	**GPIO0**	GPIO0_SR	**Bitwise SET operation of GPIO0 SR** 0: Keep 1: SET bits

A2020708 GPIO_SR0_CLR GPIO SR Control 00000000

Bit	31	30	29	28	27	26	25	24	23	22	21	20	19	18	17	16
Name	GPIO31	GPIO30	GPIO29	GPIO28	GPIO27	GPIO26	GPIO25	GPIO24	GPIO23	GPIO22	GPIO21	GPIO20	GPIO19	GPIO18	GPIO17	GPIO16
Type	WO	WO	WO	WO	WO	WO	WO	WO	WO	WO	WO	WO	WO	WO	WO	WO
Reset	0	0	0	0	0	0	0	0	0	0	0	0	0	0	0	0
Bit	15	14	13	12	11	10	9	8	7	6	5	4	3	2	1	0

© 2015 - 2017 MediaTek Inc.

This document contains information that is proprietary to MediaTek Inc. ("MediaTek") and/or its licensor(s).
Any unauthorized use, reproduction or disclosure of this document in whole or in part is strictly prohibited.

Name	GPIO15	GPIO14	GPIO13	GPIO12	GPIO11	GPIO10	GPIO9	GPIO8	GPIO7	GPIO6	GPIO5	GPIO4	GPIO3	GPIO2	GPIO1	GPIO0
Type	WO	WO	WO	WO	WO	WO	WO	WO	WO	WO	WO	WO	WO	WO	WO	WO
Reset	0	0	0	0	0	0	0	0	0	0	0	0	0	0	0	0

Overview For bitwise access of GPIO_SR0

Bit(s)	Mnemonic	Name	Description
31	**GPIO31**	GPIO31_SR	**Bitwise CLR operation of GPIO31 SR** 0: Keep 1: CLR bits
30	**GPIO30**	GPIO30_SR	**Bitwise CLR operation of GPIO30 SR** 0: Keep 1: CLR bits
29	**GPIO29**	GPIO29_SR	**Bitwise CLR operation of GPIO29 SR** 0: Keep 1: CLR bits
28	**GPIO28**	GPIO28_SR	**Bitwise CLR operation of GPIO28 SR** 0: Keep 1: CLR bits
27	**GPIO27**	GPIO27_SR	**Bitwise CLR operation of GPIO27 SR** 0: Keep 1: CLR bits
26	**GPIO26**	GPIO26_SR	**Bitwise CLR operation of GPIO26 SR** 0: Keep 1: CLR bits
25	**GPIO25**	GPIO25_SR	**Bitwise CLR operation of GPIO25 SR** 0: Keep 1: CLR bits
24	**GPIO24**	GPIO24_SR	**Bitwise CLR operation of GPIO24 SR** 0: Keep 1: CLR bits
23	**GPIO23**	GPIO23_SR	**Bitwise CLR operation of GPIO23 SR** 0: Keep 1: CLR bits
22	**GPIO22**	GPIO22_SR	**Bitwise CLR operation of GPIO22 SR** 0: Keep 1: CLR bits
21	**GPIO21**	GPIO21_SR	**Bitwise CLR operation of GPIO21 SR** 0: Keep 1: CLR bits
20	**GPIO20**	GPIO20_SR	**Bitwise CLR operation of GPIO20 SR** 0: Keep 1: CLR bits
19	**GPIO19**	GPIO19_SR	**Bitwise CLR operation of GPIO19 SR** 0: Keep 1: CLR bits
18	**GPIO18**	GPIO18_SR	**Bitwise CLR operation of GPIO18 SR** 0: Keep 1: CLR bits
17	**GPIO17**	GPIO17_SR	**Bitwise CLR operation of GPIO17 SR** 0: Keep 1: CLR bits
16	**GPIO16**	GPIO16_SR	**Bitwise CLR operation of GPIO16 SR** 0: Keep 1: CLR bits

© 2015 - 2017 MediaTek Inc.

This document contains information that is proprietary to MediaTek Inc. ("MediaTek") and/or its licensor(s).
Any unauthorized use, reproduction or disclosure of this document in whole or in part is strictly prohibited.

Bit(s)	Mnemonic	Name	Description
15	**GPIO15**	GPIO15_SR	**Bitwise CLR operation of GPIO15 SR** 0: Keep 1: CLR bits
14	**GPIO14**	GPIO14_SR	**Bitwise CLR operation of GPIO14 SR** 0: Keep 1: CLR bits
13	**GPIO13**	GPIO13_SR	**Bitwise CLR operation of GPIO13 SR** 0: Keep 1: CLR bits
12	**GPIO12**	GPIO12_SR	**Bitwise CLR operation of GPIO12 SR** 0: Keep 1: CLR bits
11	**GPIO11**	GPIO11_SR	**Bitwise CLR operation of GPIO11 SR** 0: Keep 1: CLR bits
10	**GPIO10**	GPIO10_SR	**Bitwise CLR operation of GPIO10 SR** 0: Keep 1: CLR bits
9	**GPIO9**	GPIO9_SR	**Bitwise CLR operation of GPIO9 SR** 0: Keep 1: CLR bits
8	**GPIO8**	GPIO8_SR	**Bitwise CLR operation of GPIO8 SR** 0: Keep 1: CLR bits
7	**GPIO7**	GPIO7_SR	**Bitwise CLR operation of GPIO7 SR** 0: Keep 1: CLR bits
6	**GPIO6**	GPIO6_SR	**Bitwise CLR operation of GPIO6 SR** 0: Keep 1: CLR bits
5	**GPIO5**	GPIO5_SR	**Bitwise CLR operation of GPIO5 SR** 0: Keep 1: CLR bits
4	**GPIO4**	GPIO4_SR	**Bitwise CLR operation of GPIO4 SR** 0: Keep 1: CLR bits
3	**GPIO3**	GPIO3_SR	**Bitwise CLR operation of GPIO3 SR** 0: Keep 1: CLR bits
2	**GPIO2**	GPIO2_SR	**Bitwise CLR operation of GPIO2 SR** 0: Keep 1: CLR bits
1	**GPIO1**	GPIO1_SR	**Bitwise CLR operation of GPIO1 SR** 0: Keep 1: CLR bits
0	**GPIO0**	GPIO0_SR	**Bitwise CLR operation of GPIO0 SR** 0: Keep 1: CLR bits

A2020710 GPIO_SR1 GPIO SR Control 0007FFFF

Bit	31	30	29	28	27	26	25	24	23	22	21	20	19	18	17	16
Name																GPIO 48

© 2015 - 2017 MediaTek Inc.

This document contains information that is proprietary to MediaTek Inc. ("MediaTek") and/or its licensor(s).
Any unauthorized use, reproduction or disclosure of this document in whole or in part is strictly prohibited.

Type																RW
Reset																1
Bit	15	14	13	12	11	10	9	8	7	6	5	4	3	2	1	0
Name	**GPIO 47**	**GPIO 46**	**GPIO 45**	**GPIO 44**	**GPIO 43**	**GPIO 42**	**GPIO 41**	**GPIO 40**	**GPIO 39**	**GPIO 38**	**GPIO 37**	**GPIO 36**	**GPIO 35**	**GPIO 34**	**GPIO 33**	**GPIO 32**
Type	RW	RW	RW	RW	RW	RW	RW	RW	RW	RW	RW	RW	RW	RW	RW	RW
Reset	1	1	1	1	1	1	1	1	1	1	1	1	1	1	1	1

Overview Configures GPIO slew rate control

Bit(s)	Mnemonic	Name	Description
16	**GPIO48**	GPIO48_SR	**SR for GPIO48** 0: Disable 1: Enable
15	**GPIO47**	GPIO47_SR	**SR for GPIO47** 0: Disable 1: Enable
14	**GPIO46**	GPIO46_SR	**SR for GPIO46** 0: Disable 1: Enable
13	**GPIO45**	GPIO45_SR	**SR for GPIO45** 0: Disable 1: Enable
12	**GPIO44**	GPIO44_SR	**SR for GPIO44** 0: Disable 1: Enable
11	**GPIO43**	GPIO43_SR	**SR for GPIO43** 0: Disable 1: Enable
10	**GPIO42**	GPIO42_SR	**SR for GPIO42** 0: Disable 1: Enable
9	**GPIO41**	GPIO41_SR	**SR for GPIO41** 0: Disable 1: Enable
8	**GPIO40**	GPIO40_SR	**SR for GPIO40** 0: Disable 1: Enable
7	**GPIO39**	GPIO39_SR	**SR for GPIO39** 0: Disable 1: Enable
6	**GPIO38**	GPIO38_SR	**SR for GPIO38** 0: Disable 1: Enable
5	**GPIO37**	GPIO37_SR	**SR for GPIO37** 0: Disable 1: Enable
4	**GPIO36**	GPIO36_SR	**SR for GPIO36** 0: Disable 1: Enable
3	**GPIO35**	GPIO35_SR	**SR for GPIO35** 0: Disable 1: Enable
2	**GPIO34**	GPIO34_SR	**SR for GPIO34** 0: Disable 1: Enable

© 2015 - 2017 MediaTek Inc.

This document contains information that is proprietary to MediaTek Inc. (“MediaTek”) and/or its licensor(s).
Any unauthorized use, reproduction or disclosure of this document in whole or in part is strictly prohibited.

Bit(s)	Mnemonic	Name	Description
1	**GPIO33**	GPIO33_SR	**SR for GPIO33** 0: Disable 1: Enable
0	**GPIO32**	GPIO32_SR	**SR for GPIO32** 0: Disable 1: Enable

A2020714 **GPIO_SR1_SET** **GPIO SR Control** **00000000**

Bit	31	30	29	28	27	26	25	24	23	22	21	20	19	18	17	16
Name																**GPIO48**
Type																WO
Reset																0
Bit	15	14	13	12	11	10	9	8	7	6	5	4	3	2	1	0
Name	**GPIO47**	**GPIO46**	**GPIO45**	**GPIO44**	**GPIO43**	**GPIO42**	**GPIO41**	**GPIO40**	**GPIO39**	**GPIO38**	**GPIO37**	**GPIO36**	**GPIO35**	**GPIO34**	**GPIO33**	**GPIO32**
Type	WO	WO	WO	WO	WO	WO	WO	WO	WO	WO	WO	WO	WO	WO	WO	WO
Reset	0	0	0	0	0	0	0	0	0	0	0	0	0	0	0	0

Overview For bitwise access of GPIO_SR1

Bit(s)	Mnemonic	Name	Description
16	**GPIO48**	GPIO48_SR	**Bitwise SET operation of GPIO48 SR** 0: Keep 1: SET bits
15	**GPIO47**	GPIO47_SR	**Bitwise SET operation of GPIO47 SR** 0: Keep 1: SET bits
14	**GPIO46**	GPIO46_SR	**Bitwise SET operation of GPIO46 SR** 0: Keep 1: SET bits
13	**GPIO45**	GPIO45_SR	**Bitwise SET operation of GPIO45 SR** 0: Keep 1: SET bits
12	**GPIO44**	GPIO44_SR	**Bitwise SET operation of GPIO44 SR** 0: Keep 1: SET bits
11	**GPIO43**	GPIO43_SR	**Bitwise SET operation of GPIO43 SR** 0: Keep 1: SET bits
10	**GPIO42**	GPIO42_SR	**Bitwise SET operation of GPIO42 SR** 0: Keep 1: SET bits
9	**GPIO41**	GPIO41_SR	**Bitwise SET operation of GPIO41 SR** 0: Keep 1: SET bits
8	**GPIO40**	GPIO40_SR	**Bitwise SET operation of GPIO40 SR** 0: Keep 1: SET bits
7	**GPIO39**	GPIO39_SR	**Bitwise SET operation of GPIO39 SR** 0: Keep 1: SET bits

© 2015 - 2017 MediaTek Inc.

This document contains information that is proprietary to MediaTek Inc. (“MediaTek”) and/or its licensor(s).
Any unauthorized use, reproduction or disclosure of this document in whole or in part is strictly prohibited.

Bit(s)	Mnemonic	Name	Description
6	**GPIO38**	GPIO38_SR	**Bitwise SET operation of GPIO38 SR** 0: Keep 1: SET bits
5	**GPIO37**	GPIO37_SR	**Bitwise SET operation of GPIO37 SR** 0: Keep 1: SET bits
4	**GPIO36**	GPIO36_SR	**Bitwise SET operation of GPIO36 SR** 0: Keep 1: SET bits
3	**GPIO35**	GPIO35_SR	**Bitwise SET operation of GPIO35 SR** 0: Keep 1: SET bits
2	**GPIO34**	GPIO34_SR	**Bitwise SET operation of GPIO34 SR** 0: Keep 1: SET bits
1	**GPIO33**	GPIO33_SR	**Bitwise SET operation of GPIO33 SR** 0: Keep 1: SET bits
0	**GPIO32**	GPIO32_SR	**Bitwise SET operation of GPIO32 SR** 0: Keep 1: SET bits

A2020718 **GPIO_SR1_CLR** **GPIO SR Control** **00000000**

Bit	31	30	29	28	27	26	25	24	23	22	21	20	19	18	17	16
Name																**GPIO48**
Type																WO
Reset																0
Bit	15	14	13	12	11	10	9	8	7	6	5	4	3	2	1	0
Name	**GPIO47**	**GPIO46**	**GPIO45**	**GPIO44**	**GPIO43**	**GPIO42**	**GPIO41**	**GPIO40**	**GPIO39**	**GPIO38**	**GPIO37**	**GPIO36**	**GPIO35**	**GPIO34**	**GPIO33**	**GPIO32**
Type	WO	WO	WO	WO	WO	WO	WO	WO	WO	WO	WO	WO	WO	WO	WO	WO
Reset	0	0	0	0	0	0	0	0	0	0	0	0	0	0	0	0

Overview For bitwise access of GPIO_SR1

Bit(s)	Mnemonic	Name	Description
16	**GPIO48**	GPIO48_SR	**Bitwise CLR operation of GPIO48 SR** 0: Keep 1: CLR bits
15	**GPIO47**	GPIO47_SR	**Bitwise CLR operation of GPIO47 SR** 0: Keep 1: CLR bits
14	**GPIO46**	GPIO46_SR	**Bitwise CLR operation of GPIO46 SR** 0: Keep 1: CLR bits
13	**GPIO45**	GPIO45_SR	**Bitwise CLR operation of GPIO45 SR** 0: Keep 1: CLR bits
12	**GPIO44**	GPIO44_SR	**Bitwise CLR operation of GPIO44 SR** 0: Keep 1: CLR bits

© 2015 - 2017 MediaTek Inc.

This document contains information that is proprietary to MediaTek Inc. (“MediaTek”) and/or its licensor(s).
Any unauthorized use, reproduction or disclosure of this document in whole or in part is strictly prohibited.

Bit(s)	Mnemonic	Name	Description
11	**GPIO43**	GPIO43_SR	**Bitwise CLR operation of GPIO43 SR** 0: Keep 1: CLR bits
10	**GPIO42**	GPIO42_SR	**Bitwise CLR operation of GPIO42 SR** 0: Keep 1: CLR bits
9	**GPIO41**	GPIO41_SR	**Bitwise CLR operation of GPIO41 SR** 0: Keep 1: CLR bits
8	**GPIO40**	GPIO40_SR	**Bitwise CLR operation of GPIO40 SR** 0: Keep 1: CLR bits
7	**GPIO39**	GPIO39_SR	**Bitwise CLR operation of GPIO39 SR** 0: Keep 1: CLR bits
6	**GPIO38**	GPIO38_SR	**Bitwise CLR operation of GPIO38 SR** 0: Keep 1: CLR bits
5	**GPIO37**	GPIO37_SR	**Bitwise CLR operation of GPIO37 SR** 0: Keep 1: CLR bits
4	**GPIO36**	GPIO36_SR	**Bitwise CLR operation of GPIO36 SR** 0: Keep 1: CLR bits
3	**GPIO35**	GPIO35_SR	**Bitwise CLR operation of GPIO35 SR** 0: Keep 1: CLR bits
2	**GPIO34**	GPIO34_SR	**Bitwise CLR operation of GPIO34 SR** 0: Keep 1: CLR bits
1	**GPIO33**	GPIO33_SR	**Bitwise CLR operation of GPIO33 SR** 0: Keep 1: CLR bits
0	**GPIO32**	GPIO32_SR	**Bitwise CLR operation of GPIO32 SR** 0: Keep 1: CLR bits

A2020800 GPIO_DRV0 GPIO DRV Control 00000000

Bit	31	30	29	28	27	26	25	24	23	22	21	20	19	18	17	16
Name	GPIO15		GPIO14		GPIO13		GPIO12		GPIO11		GPIO10		GPIO9		GPIO8	
Type	RW		RW		RW		RW		RW		RW		RW		RW	
Reset	0	0	0	0	0	0	0	0	0	0	0	0	0	0	0	0
Bit	15	14	13	12	11	10	9	8	7	6	5	4	3	2	1	0
Name	GPIO7		GPIO6		GPIO5		GPIO4		GPIO3		GPIO2		GPIO1		GPIO0	
Type	RW		RW		RW		RW		RW		RW		RW		RW	
Reset	0	0	0	0	0	0	0	0	0	0	0	0	0	0	0	0

Overview Configures GPIO driving control

Bit(s)	Mnemonic	Name	Description
31:30	**GPIO15**	GPIO15_DRV	**GPIO15 driving control**
29:28	**GPIO14**	GPIO14_DRV	**GPIO14 driving control**
27:26	**GPIO13**	GPIO13_DRV	**GPIO13 driving control**

© 2015 - 2017 MediaTek Inc.

This document contains information that is proprietary to MediaTek Inc. ("MediaTek") and/or its licensor(s).
Any unauthorized use, reproduction or disclosure of this document in whole or in part is strictly prohibited.

Bit(s)	Mnemonic	Name	Description
25:24	**GPIO12**	GPIO12_DRV	**GPIO12 driving control**
23:22	**GPIO11**	GPIO11_DRV	**GPIO11 driving control**
21:20	**GPIO10**	GPIO10_DRV	**GPIO10 driving control**
19:18	**GPIO9**	GPIO9_DRV	**GPIO9 driving control**
17:16	**GPIO8**	GPIO8_DRV	**GPIO8 driving control**
15:14	**GPIO7**	GPIO7_DRV	**GPIO7 driving control**
13:12	**GPIO6**	GPIO6_DRV	**GPIO6 driving control**
11:10	**GPIO5**	GPIO5_DRV	**GPIO5 driving control**
9:8	**GPIO4**	GPIO4_DRV	**GPIO4 driving control**
7:6	**GPIO3**	GPIO3_DRV	**GPIO3 driving control**
5:4	**GPIO2**	GPIO2_DRV	**GPIO2 driving control**
3:2	**GPIO1**	GPIO1_DRV	**GPIO1 driving control**
1:0	**GPIO0**	GPIO0_DRV	**GPIO0 driving control**

A2020804 GPIO_DRV0_SET GPIO DRV Control 00000000

Bit	31	30	29	28	27	26	25	24	23	22	21	20	19	18	17	16
Name	GPIO15		GPIO14		GPIO13		GPIO12		GPIO11		GPIO10		GPIO9		GPIO8	
Type	WO		WO		WO		WO		WO		WO		WO		WO	
Reset	0	0	0	0	0	0	0	0	0	0	0	0	0	0	0	0
Bit	15	14	13	12	11	10	9	8	7	6	5	4	3	2	1	0
Name	GPIO7		GPIO6		GPIO5		GPIO4		GPIO3		GPIO2		GPIO1		GPIO0	
Type	WO		WO		WO		WO		WO		WO		WO		WO	
Reset	0	0	0	0	0	0	0	0	0	0	0	0	0	0	0	0

Overview For bitwise access of GPIO_DRV0

Bit(s)	Mnemonic	Name	Description
31:30	**GPIO15**	GPIO15_DRV	**Bitwise SET operation of GPIO15_DRV** 0: Keep 1: SET bits
29:28	**GPIO14**	GPIO14_DRV	**Bitwise SET operation of GPIO14_DRV** 0: Keep 1: SET bits
27:26	**GPIO13**	GPIO13_DRV	**Bitwise SET operation of GPIO13_DRV** 0: Keep 1: SET bits
25:24	**GPIO12**	GPIO12_DRV	**Bitwise SET operation of GPIO12_DRV** 0: Keep 1: SET bits
23:22	**GPIO11**	GPIO11_DRV	**Bitwise SET operation of GPIO11_DRV** 0: Keep 1: SET bits
21:20	**GPIO10**	GPIO10_DRV	**Bitwise SET operation of GPIO10_DRV** 0: Keep 1: SET bits
19:18	**GPIO9**	GPIO9_DRV	**Bitwise SET operation of GPIO9_DRV** 0: Keep 1: SET bits
17:16	**GPIO8**	GPIO8_DRV	**Bitwise SET operation of GPIO8_DRV** 0: Keep

© 2015 - 2017 MediaTek Inc.

This document contains information that is proprietary to MediaTek Inc. (“MediaTek”) and/or its licensor(s).
Any unauthorized use, reproduction or disclosure of this document in whole or in part is strictly prohibited.

Bit(s)	Mnemonic	Name	Description
			1: SET bits
15:14	**GPIO7**	GPIO7_DRV	**Bitwise SET operation of GPIO7_DRV** 0: Keep 1: SET bits
13:12	**GPIO6**	GPIO6_DRV	**Bitwise SET operation of GPIO6_DRV** 0: Keep 1: SET bits
11:10	**GPIO5**	GPIO5_DRV	**Bitwise SET operation of GPIO5_DRV** 0: Keep 1: SET bits
9:8	**GPIO4**	GPIO4_DRV	**Bitwise SET operation of GPIO4_DRV** 0: Keep 1: SET bits
7:6	**GPIO3**	GPIO3_DRV	**Bitwise SET operation of GPIO3_DRV** 0: Keep 1: SET bits
5:4	**GPIO2**	GPIO2_DRV	**Bitwise SET operation of GPIO2_DRV** 0: Keep 1: SET bits
3:2	**GPIO1**	GPIO1_DRV	**Bitwise SET operation of GPIO1_DRV** 0: Keep 1: SET bits
1:0	**GPIO0**	GPIO0_DRV	**Bitwise SET operation of GPIO0_DRV** 0: Keep 1: SET bits

A2020808 GPIO_DRV0_CLR GPIO DRV Control 00000000

Bit	31	30	29	28	27	26	25	24	23	22	21	20	19	18	17	16
Name	GPIO15		GPIO14		GPIO13		GPIO12		GPIO11		GPIO10		GPIO9		GPIO8	
Type	WO		WO		WO		WO		WO		WO		WO		WO	
Reset	0	0	0	0	0	0	0	0	0	0	0	0	0	0	0	0
Bit	15	14	13	12	11	10	9	8	7	6	5	4	3	2	1	0
Name	GPIO7		GPIO6		GPIO5		GPIO4		GPIO3		GPIO2		GPIO1		GPIO0	
Type	WO		WO		WO		WO		WO		WO		WO		WO	
Reset	0	0	0	0	0	0	0	0	0	0	0	0	0	0	0	0

Overview For bitwise access of GPIO_DRV0

Bit(s)	Mnemonic	Name	Description
31:30	**GPIO15**	GPIO15_DRV	**Bitwise CLR operation of GPIO15_DRV** 0: Keep 1: CLR bits
29:28	**GPIO14**	GPIO14_DRV	**Bitwise CLR operation of GPIO14_DRV** 0: Keep 1: CLR bits
27:26	**GPIO13**	GPIO13_DRV	**Bitwise CLR operation of GPIO13_DRV** 0: Keep 1: CLR bits
25:24	**GPIO12**	GPIO12_DRV	**Bitwise CLR operation of GPIO12_DRV** 0: Keep 1: CLR bits
23:22	**GPIO11**	GPIO11_DRV	**Bitwise CLR operation of GPIO11_DRV**

© 2015 - 2017 MediaTek Inc.

This document contains information that is proprietary to MediaTek Inc. ("MediaTek") and/or its licensor(s).
Any unauthorized use, reproduction or disclosure of this document in whole or in part is strictly prohibited.

Bit(s)	Mnemonic	Name	Description
			0: Keep 1: CLR bits
21:20	**GPIO10**	GPIO10_DRV	**Bitwise CLR operation of GPIO10_DRV** 0: Keep 1: CLR bits
19:18	**GPIO9**	GPIO9_DRV	**Bitwise CLR operation of GPIO9_DRV** 0: Keep 1: CLR bits
17:16	**GPIO8**	GPIO8_DRV	**Bitwise CLR operation of GPIO8_DRV** 0: Keep 1: CLR bits
15:14	**GPIO7**	GPIO7_DRV	**Bitwise CLR operation of GPIO7_DRV** 0: Keep 1: CLR bits
13:12	**GPIO6**	GPIO6_DRV	**Bitwise CLR operation of GPIO6_DRV** 0: Keep 1: CLR bits
11:10	**GPIO5**	GPIO5_DRV	**Bitwise CLR operation of GPIO5_DRV** 0: Keep 1: CLR bits
9:8	**GPIO4**	GPIO4_DRV	**Bitwise CLR operation of GPIO4_DRV** 0: Keep 1: CLR bits
7:6	**GPIO3**	GPIO3_DRV	**Bitwise CLR operation of GPIO3_DRV** 0: Keep 1: CLR bits
5:4	**GPIO2**	GPIO2_DRV	**Bitwise CLR operation of GPIO2_DRV** 0: Keep 1: CLR bits
3:2	**GPIO1**	GPIO1_DRV	**Bitwise CLR operation of GPIO1_DRV** 0: Keep 1: CLR bits
1:0	**GPIO0**	GPIO0_DRV	**Bitwise CLR operation of GPIO0_DRV** 0: Keep 1: CLR bits

A2020810 GPIO_DRV1 GPIO DRV Control 00000000

Bit	31	30	29	28	27	26	25	24	23	22	21	20	19	18	17	16
Name	GPIO31		GPIO30		GPIO29		GPIO28		GPIO27		GPIO26		GPIO25		GPIO24	
Type	RW		RW		RW		RW		RW		RW		RW		RW	
Reset	0	0	0	0	0	0	0	0	0	0	0	0	0	0	0	0
Bit	15	14	13	12	11	10	9	8	7	6	5	4	3	2	1	0
Name	GPIO23		GPIO22		GPIO21		GPIO20		GPIO19		GPIO18		GPIO17		GPIO16	
Type	RW		RW		RW		RW		RW		RW		RW		RW	
Reset	0	0	0	0	0	0	0	0	0	0	0	0	0	0	0	0

Overview Configures GPIO driving control

Bit(s)	Mnemonic	Name	Description
31:30	**GPIO31**	GPIO31_DRV	**GPIO31 driving control**
29:28	**GPIO30**	GPIO30_DRV	**GPIO30 driving control**
27:26	**GPIO29**	GPIO29_DRV	**GPIO29 driving control**
25:24	**GPIO28**	GPIO28_DRV	**GPIO28 driving control**

© 2015 - 2017 MediaTek Inc.

This document contains information that is proprietary to MediaTek Inc. (“MediaTek”) and/or its licensor(s).
Any unauthorized use, reproduction or disclosure of this document in whole or in part is strictly prohibited.

Bit(s)	Mnemonic	Name	Description
23:22	**GPIO27**	GPIO27_DRV	**GPIO27 driving control**
21:20	**GPIO26**	GPIO26_DRV	**GPIO26 driving control**
19:18	**GPIO25**	GPIO25_DRV	**GPIO25 driving control**
17:16	**GPIO24**	GPIO24_DRV	**GPIO24 driving control**
15:14	**GPIO23**	GPIO23_DRV	**GPIO23 driving control**
13:12	**GPIO22**	GPIO22_DRV	**GPIO22 driving control**
11:10	**GPIO21**	GPIO21_DRV	**GPIO21 driving control**
9:8	**GPIO20**	GPIO20_DRV	**GPIO20 driving control**
7:6	**GPIO19**	GPIO19_DRV	**GPIO19 driving control**
5:4	**GPIO18**	GPIO18_DRV	**GPIO18 driving control**
3:2	**GPIO17**	GPIO17_DRV	**GPIO17 driving control**
1:0	**GPIO16**	GPIO16_DRV	**GPIO16 driving control**

A2020814 GPIO_DRV1_SET GPIO DRV Control 00000000

Bit	31	30	29	28	27	26	25	24	23	22	21	20	19	18	17	16
Name	**GPIO31**		**GPIO30**		**GPIO29**		**GPIO28**		**GPIO27**		**GPIO26**		**GPIO25**		**GPIO24**	
Type	WO		WO		WO		WO		WO		WO		WO		WO	
Reset	0	0	0	0	0	0	0	0	0	0	0	0	0	0	0	0
Bit	15	14	13	12	11	10	9	8	7	6	5	4	3	2	1	0
Name	**GPIO23**		**GPIO22**		**GPIO21**		**GPIO20**		**GPIO19**		**GPIO18**		**GPIO17**		**GPIO16**	
Type	WO		WO		WO		WO		WO		WO		WO		WO	
Reset	0	0	0	0	0	0	0	0	0	0	0	0	0	0	0	0

Overview For bitwise access of GPIO_DRV1

Bit(s)	Mnemonic	Name	Description
31:30	**GPIO31**	GPIO31_DRV	**Bitwise SET operation of GPIO31_DRV** 0: Keep 1: SET bits
29:28	**GPIO30**	GPIO30_DRV	**Bitwise SET operation of GPIO30_DRV** 0: Keep 1: SET bits
27:26	**GPIO29**	GPIO29_DRV	**Bitwise SET operation of GPIO29_DRV** 0: Keep 1: SET bits
25:24	**GPIO28**	GPIO28_DRV	**Bitwise SET operation of GPIO28_DRV** 0: Keep 1: SET bits
23:22	**GPIO27**	GPIO27_DRV	**Bitwise SET operation of GPIO27_DRV** 0: Keep 1: SET bits
21:20	**GPIO26**	GPIO26_DRV	**Bitwise SET operation of GPIO26_DRV** 0: Keep 1: SET bits
19:18	**GPIO25**	GPIO25_DRV	**Bitwise SET operation of GPIO25_DRV** 0: Keep 1: SET bits
17:16	**GPIO24**	GPIO24_DRV	**Bitwise SET operation of GPIO24_DRV** 0: Keep 1: SET bits

© 2015 - 2017 MediaTek Inc.

This document contains information that is proprietary to MediaTek Inc. (“MediaTek”) and/or its licensor(s).
Any unauthorized use, reproduction or disclosure of this document in whole or in part is strictly prohibited.

Bit(s)	Mnemonic	Name	Description
15:14	**GPIO23**	GPIO23_DRV	**Bitwise SET operation of GPIO23_DRV** 0: Keep 1: SET bits
13:12	**GPIO22**	GPIO22_DRV	**Bitwise SET operation of GPIO22_DRV** 0: Keep 1: SET bits
11:10	**GPIO21**	GPIO21_DRV	**Bitwise SET operation of GPIO21_DRV** 0: Keep 1: SET bits
9:8	**GPIO20**	GPIO20_DRV	**Bitwise SET operation of GPIO20_DRV** 0: Keep 1: SET bits
7:6	**GPIO19**	GPIO19_DRV	**Bitwise SET operation of GPIO19_DRV** 0: Keep 1: SET bits
5:4	**GPIO18**	GPIO18_DRV	**Bitwise SET operation of GPIO18_DRV** 0: Keep 1: SET bits
3:2	**GPIO17**	GPIO17_DRV	**Bitwise SET operation of GPIO17_DRV** 0: Keep 1: SET bits
1:0	**GPIO16**	GPIO16_DRV	**Bitwise SET operation of GPIO16_DRV** 0: Keep 1: SET bits

A2020818 GPIO_DRV1_CLR GPIO DRV Control 00000000

Bit	31	30	29	28	27	26	25	24	23	22	21	20	19	18	17	16
Name	GPIO31		GPIO30		GPIO29		GPIO28		GPIO27		GPIO26		GPIO25		GPIO24	
Type	WO		WO		WO		WO		WO		WO		WO		WO	
Reset	0	0	0	0	0	0	0	0	0	0	0	0	0	0	0	0
Bit	15	14	13	12	11	10	9	8	7	6	5	4	3	2	1	0
Name	GPIO23		GPIO22		GPIO21		GPIO20		GPIO19		GPIO18		GPIO17		GPIO16	
Type	WO		WO		WO		WO		WO		WO		WO		WO	
Reset	0	0	0	0	0	0	0	0	0	0	0	0	0	0	0	0

Overview For bitwise access of GPIO_DRV1

Bit(s)	Mnemonic	Name	Description
31:30	**GPIO31**	GPIO31_DRV	**Bitwise CLR operation of GPIO31_DRV** 0: Keep 1: CLR bits
29:28	**GPIO30**	GPIO30_DRV	**Bitwise CLR operation of GPIO30_DRV** 0: Keep 1: CLR bits
27:26	**GPIO29**	GPIO29_DRV	**Bitwise CLR operation of GPIO29_DRV** 0: Keep 1: CLR bits
25:24	**GPIO28**	GPIO28_DRV	**Bitwise CLR operation of GPIO28_DRV** 0: Keep 1: CLR bits
23:22	**GPIO27**	GPIO27_DRV	**Bitwise CLR operation of GPIO27_DRV** 0: Keep

© 2015 - 2017 MediaTek Inc.

This document contains information that is proprietary to MediaTek Inc. ("MediaTek") and/or its licensor(s).
Any unauthorized use, reproduction or disclosure of this document in whole or in part is strictly prohibited.

Bit(s)	Mnemonic	Name	Description
			1: CLR bits
21:20	**GPIO26**	GPIO26_DRV	**Bitwise CLR operation of GPIO26_DRV** 0: Keep 1: CLR bits
19:18	**GPIO25**	GPIO25_DRV	**Bitwise CLR operation of GPIO25_DRV** 0: Keep 1: CLR bits
17:16	**GPIO24**	GPIO24_DRV	**Bitwise CLR operation of GPIO24_DRV** 0: Keep 1: CLR bits
15:14	**GPIO23**	GPIO23_DRV	**Bitwise CLR operation of GPIO23_DRV** 0: Keep 1: CLR bits
13:12	**GPIO22**	GPIO22_DRV	**Bitwise CLR operation of GPIO22_DRV** 0: Keep 1: CLR bits
11:10	**GPIO21**	GPIO21_DRV	**Bitwise CLR operation of GPIO21_DRV** 0: Keep 1: CLR bits
9:8	**GPIO20**	GPIO20_DRV	**Bitwise CLR operation of GPIO20_DRV** 0: Keep 1: CLR bits
7:6	**GPIO19**	GPIO19_DRV	**Bitwise CLR operation of GPIO19_DRV** 0: Keep 1: CLR bits
5:4	**GPIO18**	GPIO18_DRV	**Bitwise CLR operation of GPIO18_DRV** 0: Keep 1: CLR bits
3:2	**GPIO17**	GPIO17_DRV	**Bitwise CLR operation of GPIO17_DRV** 0: Keep 1: CLR bits
1:0	**GPIO16**	GPIO16_DRV	**Bitwise CLR operation of GPIO16_DRV** 0: Keep 1: CLR bits

A2020820 GPIO_DRV2 GPIO DRV Control 00000000

Bit	31	30	29	28	27	26	25	24	23	22	21	20	19	18	17	16
Name	GPIO47		GPIO46		GPIO45		GPIO44		GPIO43		GPIO42		GPIO41		GPIO40	
Type	RW		RW		RW		RW		RW		RW		RW		RW	
Reset	0	0	0	0	0	0	0	0	0	0	0	0	0	0	0	0
Bit	15	14	13	12	11	10	9	8	7	6	5	4	3	2	1	0
Name	GPIO39		GPIO38		GPIO37		GPIO36		GPIO35		GPIO34		GPIO33		GPIO32	
Type	RW		RW		RW		RW		RW		RW		RW		RW	
Reset	0	0	0	0	0	0	0	0	0	0	0	0	0	0	0	0

Overview Configures GPIO driving control

Bit(s)	Mnemonic	Name	Description
31:30	**GPIO47**	GPIO47_DRV	**GPIO47 driving control**
29:28	**GPIO46**	GPIO46_DRV	**GPIO46 driving control**
27:26	**GPIO45**	GPIO45_DRV	**GPIO45 driving control**
25:24	**GPIO44**	GPIO44_DRV	**GPIO44 driving control**

© 2015 - 2017 MediaTek Inc.

This document contains information that is proprietary to MediaTek Inc. ("MediaTek") and/or its licensor(s).
Any unauthorized use, reproduction or disclosure of this document in whole or in part is strictly prohibited.

Bit(s)	Mnemonic	Name	Description
23:22	**GPIO43**	GPIO43_DRV	**GPIO43 driving control**
21:20	**GPIO42**	GPIO42_DRV	**GPIO42 driving control**
19:18	**GPIO41**	GPIO41_DRV	**GPIO41 driving control**
17:16	**GPIO40**	GPIO40_DRV	**GPIO40 driving control**
15:14	**GPIO39**	GPIO39_DRV	**GPIO39 driving control**
13:12	**GPIO38**	GPIO38_DRV	**GPIO38 driving control**
11:10	**GPIO37**	GPIO37_DRV	**GPIO37 driving control**
9:8	**GPIO36**	GPIO36_DRV	**GPIO36 driving control**
7:6	**GPIO35**	GPIO35_DRV	**GPIO35 driving control**
5:4	**GPIO34**	GPIO34_DRV	**GPIO34 driving control**
3:2	**GPIO33**	GPIO33_DRV	**GPIO33 driving control**
1:0	**GPIO32**	GPIO32_DRV	**GPIO32 driving control**

A2020824 GPIO_DRV2_SET GPIO DRV Control 00000000

Bit	31	30	29	28	27	26	25	24	23	22	21	20	19	18	17	16
Name	**GPIO47**		**GPIO46**		**GPIO45**		**GPIO44**		**GPIO43**		**GPIO42**		**GPIO41**		**GPIO40**	
Type	WO		WO		WO		WO		WO		WO		WO		WO	
Reset	0	0	0	0	0	0	0	0	0	0	0	0	0	0	0	0
Bit	15	14	13	12	11	10	9	8	7	6	5	4	3	2	1	0
Name	**GPIO39**		**GPIO38**		**GPIO37**		**GPIO36**		**GPIO35**		**GPIO34**		**GPIO33**		**GPIO32**	
Type	WO		WO		WO		WO		WO		WO		WO		WO	
Reset	0	0	0	0	0	0	0	0	0	0	0	0	0	0	0	0

Overview For bitwise access of GPIO_DRV2

Bit(s)	Mnemonic	Name	Description
31:30	**GPIO47**	GPIO47_DRV	**Bitwise SET operation of GPIO47_DRV** 0: Keep 1: SET bits
29:28	**GPIO46**	GPIO46_DRV	**Bitwise SET operation of GPIO46_DRV** 0: Keep 1: SET bits
27:26	**GPIO45**	GPIO45_DRV	**Bitwise SET operation of GPIO45_DRV** 0: Keep 1: SET bits
25:24	**GPIO44**	GPIO44_DRV	**Bitwise SET operation of GPIO44_DRV** 0: Keep 1: SET bits
23:22	**GPIO43**	GPIO43_DRV	**Bitwise SET operation of GPIO43_DRV** 0: Keep 1: SET bits
21:20	**GPIO42**	GPIO42_DRV	**Bitwise SET operation of GPIO42_DRV** 0: Keep 1: SET bits
19:18	**GPIO41**	GPIO41_DRV	**Bitwise SET operation of GPIO41_DRV** 0: Keep 1: SET bits
17:16	**GPIO40**	GPIO40_DRV	**Bitwise SET operation of GPIO40_DRV** 0: Keep 1: SET bits

© 2015 - 2017 MediaTek Inc.

This document contains information that is proprietary to MediaTek Inc. (“MediaTek”) and/or its licensor(s).
Any unauthorized use, reproduction or disclosure of this document in whole or in part is strictly prohibited.

Bit(s)	Mnemonic	Name	Description
15:14	**GPIO39**	GPIO39_DRV	**Bitwise SET operation of GPIO39_DRV** 0: Keep 1: SET bits
13:12	**GPIO38**	GPIO38_DRV	**Bitwise SET operation of GPIO38_DRV** 0: Keep 1: SET bits
11:10	**GPIO37**	GPIO37_DRV	**Bitwise SET operation of GPIO37_DRV** 0: Keep 1: SET bits
9:8	**GPIO36**	GPIO36_DRV	**Bitwise SET operation of GPIO36_DRV** 0: Keep 1: SET bits
7:6	**GPIO35**	GPIO35_DRV	**Bitwise SET operation of GPIO35_DRV** 0: Keep 1: SET bits
5:4	**GPIO34**	GPIO34_DRV	**Bitwise SET operation of GPIO34_DRV** 0: Keep 1: SET bits
3:2	**GPIO33**	GPIO33_DRV	**Bitwise SET operation of GPIO33_DRV** 0: Keep 1: SET bits
1:0	**GPIO32**	GPIO32_DRV	**Bitwise SET operation of GPIO32_DRV** 0: Keep 1: SET bits

A2020828 GPIO_DRV2_CLR GPIO DRV Control 00000000

Bit	31	30	29	28	27	26	25	24	23	22	21	20	19	18	17	16
Name	GPIO47		GPIO46		GPIO45		GPIO44		GPIO43		GPIO42		GPIO41		GPIO40	
Type	WO		WO		WO		WO		WO		WO		WO		WO	
Reset	0	0	0	0	0	0	0	0	0	0	0	0	0	0	0	0
Bit	15	14	13	12	11	10	9	8	7	6	5	4	3	2	1	0
Name	GPIO39		GPIO38		GPIO37		GPIO36		GPIO35		GPIO34		GPIO33		GPIO32	
Type	WO		WO		WO		WO		WO		WO		WO		WO	
Reset	0	0	0	0	0	0	0	0	0	0	0	0	0	0	0	0

Overview For bitwise access of GPIO_DRV2

Bit(s)	Mnemonic	Name	Description
31:30	**GPIO47**	GPIO47_DRV	**Bitwise CLR operation of GPIO47_DRV** 0: Keep 1: CLR bits
29:28	**GPIO46**	GPIO46_DRV	**Bitwise CLR operation of GPIO46_DRV** 0: Keep 1: CLR bits
27:26	**GPIO45**	GPIO45_DRV	**Bitwise CLR operation of GPIO45_DRV** 0: Keep 1: CLR bits
25:24	**GPIO44**	GPIO44_DRV	**Bitwise CLR operation of GPIO44_DRV** 0: Keep 1: CLR bits
23:22	**GPIO43**	GPIO43_DRV	**Bitwise CLR operation of GPIO43_DRV** 0: Keep

© 2015 - 2017 MediaTek Inc.

This document contains information that is proprietary to MediaTek Inc. (“MediaTek”) and/or its licensor(s).
Any unauthorized use, reproduction or disclosure of this document in whole or in part is strictly prohibited.

Bit(s)	Mnemonic	Name	Description
			1: CLR bits
21:20	**GPIO42**	GPIO42_DRV	**Bitwise CLR operation of GPIO42_DRV** 0: Keep 1: CLR bits
19:18	**GPIO41**	GPIO41_DRV	**Bitwise CLR operation of GPIO41_DRV** 0: Keep 1: CLR bits
17:16	**GPIO40**	GPIO40_DRV	**Bitwise CLR operation of GPIO40_DRV** 0: Keep 1: CLR bits
15:14	**GPIO39**	GPIO39_DRV	**Bitwise CLR operation of GPIO39_DRV** 0: Keep 1: CLR bits
13:12	**GPIO38**	GPIO38_DRV	**Bitwise CLR operation of GPIO38_DRV** 0: Keep 1: CLR bits
11:10	**GPIO37**	GPIO37_DRV	**Bitwise CLR operation of GPIO37_DRV** 0: Keep 1: CLR bits
9:8	**GPIO36**	GPIO36_DRV	**Bitwise CLR operation of GPIO36_DRV** 0: Keep 1: CLR bits
7:6	**GPIO35**	GPIO35_DRV	**Bitwise CLR operation of GPIO35_DRV** 0: Keep 1: CLR bits
5:4	**GPIO34**	GPIO34_DRV	**Bitwise CLR operation of GPIO34_DRV** 0: Keep 1: CLR bits
3:2	**GPIO33**	GPIO33_DRV	**Bitwise CLR operation of GPIO33_DRV** 0: Keep 1: CLR bits
1:0	**GPIO32**	GPIO32_DRV	**Bitwise CLR operation of GPIO32_DRV** 0: Keep 1: CLR bits

A2020830 GPIO_DRV3 GPIO DRV Control 00000000

Bit	31	30	29	28	27	26	25	24	23	22	21	20	19	18	17	16
Name																
Type																
Reset																
Bit	15	14	13	12	11	10	9	8	7	6	5	4	3	2	1	0
Name															**GPIO48**	
Type															RW	
Reset															0	0

Overview Configures GPIO driving control

Bit(s)	Mnemonic	Name	Description
1:0	**GPIO48**	GPIO48_DRV	**GPIO48 driving control**

A2020834 GPIO_DRV3_S GPIO DRV Control 00000000

© 2015 - 2017 MediaTek Inc.

This document contains information that is proprietary to MediaTek Inc. ("MediaTek") and/or its licensor(s).
Any unauthorized use, reproduction or disclosure of this document in whole or in part is strictly prohibited.

ET

Bit	31	30	29	28	27	26	25	24	23	22	21	20	19	18	17	16
Name																
Type																
Reset																
Bit	15	14	13	12	11	10	9	8	7	6	5	4	3	2	1	0
Name															GPIO48	
Type															WO	
Reset															0	0

Overview For bitwise access of GPIO_DRV3

Bit(s)	Mnemonic	Name	Description
1:0	**GPIO48**	GPIO48_DRV	**Bitwise SET operation of GPIO48_DRV** 0: Keep 1: SET bits

A2020838 GPIO_DRV3_CLR GPIO DRV Control 00000000

Bit	31	30	29	28	27	26	25	24	23	22	21	20	19	18	17	16
Name																
Type																
Reset																
Bit	15	14	13	12	11	10	9	8	7	6	5	4	3	2	1	0
Name															GPIO48	
Type															WO	
Reset															0	0

Overview For bitwise access of GPIO_DRV3

Bit(s)	Mnemonic	Name	Description
1:0	**GPIO48**	GPIO48_DRV	**Bitwise CLR operation of GPIO48_DRV** 0: Keep 1: CLR bits

A2020900 GPIO_IES0 GPIO IES Control FFFFFFFF

Bit	31	30	29	28	27	26	25	24	23	22	21	20	19	18	17	16
Name	GPIO31	GPIO30	GPIO29	GPIO28	GPIO27	GPIO26	GPIO25	GPIO24	GPIO23	GPIO22	GPIO21	GPIO20	GPIO19	GPIO18	GPIO17	GPIO16
Type	RW	RW	RW	RW	RW	RW	RW	RW	RW	RW	RW	RW	RW	RW	RW	RW
Reset	1	1	1	1	1	1	1	1	1	1	1	1	1	1	1	1
Bit	15	14	13	12	11	10	9	8	7	6	5	4	3	2	1	0
Name	GPIO15	GPIO14	GPIO13	GPIO12	GPIO11	GPIO10	GPIO9	GPIO8	GPIO7	GPIO6	GPIO5	GPIO4	GPIO3	GPIO2	GPIO1	GPIO0
Type	RW	RW	RW	RW	RW	RW	RW	RW	RW	RW	RW	RW	RW	RW	RW	RW
Reset	1	1	1	1	1	1	1	1	1	1	1	1	1	1	1	1

Overview Configures GPIO input enabling control

Note that the **GPIO_DIN** value is meaningless once **GPIO_IES** is enabled.

Bit(s)	Mnemonic	Name	Description
31	**GPIO31**	GPIO31_IES	**Input buffer for GPIO31_IES** 0: Disable 1: Enable

© 2015 - 2017 MediaTek Inc.
This document contains information that is proprietary to MediaTek Inc. ("MediaTek") and/or its licensor(s).
Any unauthorized use, reproduction or disclosure of this document in whole or in part is strictly prohibited.

Bit(s)	Mnemonic	Name	Description
30	**GPIO30**	GPIO30_IES	**Input buffer for GPIO30_IES** 0: Disable 1: Enable
29	**GPIO29**	GPIO29_IES	**Input buffer for GPIO29_IES** 0: Disable 1: Enable
28	**GPIO28**	GPIO28_IES	**Input buffer for GPIO28_IES** 0: Disable 1: Enable
27	**GPIO27**	GPIO27_IES	**Input buffer for GPIO27_IES** 0: Disable 1: Enable
26	**GPIO26**	GPIO26_IES	**Input buffer for GPIO26_IES** 0: Disable 1: Enable
25	**GPIO25**	GPIO25_IES	**Input buffer for GPIO25_IES** 0: Disable 1: Enable
24	**GPIO24**	GPIO24_IES	**Input buffer for GPIO24_IES** 0: Disable 1: Enable
23	**GPIO23**	GPIO23_IES	**Input buffer for GPIO23_IES** 0: Disable 1: Enable
22	**GPIO22**	GPIO22_IES	**Input buffer for GPIO22_IES** 0: Disable 1: Enable
21	**GPIO21**	GPIO21_IES	**Input buffer for GPIO21_IES** 0: Disable 1: Enable
20	**GPIO20**	GPIO20_IES	**Input buffer for GPIO20_IES** 0: Disable 1: Enable
19	**GPIO19**	GPIO19_IES	**Input buffer for GPIO19_IES** 0: Disable 1: Enable
18	**GPIO18**	GPIO18_IES	**Input buffer for GPIO18_IES** 0: Disable 1: Enable
17	**GPIO17**	GPIO17_IES	**Input buffer for GPIO17_IES** 0: Disable 1: Enable
16	**GPIO16**	GPIO16_IES	**Input buffer for GPIO16_IES** 0: Disable 1: Enable
15	**GPIO15**	GPIO15_IES	**Input buffer for GPIO15_IES** 0: Disable 1: Enable
14	**GPIO14**	GPIO14_IES	**Input buffer for GPIO14_IES** 0: Disable 1: Enable
13	**GPIO13**	GPIO13_IES	**Input buffer for GPIO13_IES** 0: Disable 1: Enable

© 2015 - 2017 MediaTek Inc.

This document contains information that is proprietary to MediaTek Inc. (“MediaTek”) and/or its licensor(s).
Any unauthorized use, reproduction or disclosure of this document in whole or in part is strictly prohibited.

Bit(s)	Mnemonic	Name	Description
12	**GPIO12**	GPIO12_IES	**Input buffer for GPIO12_IES** 0: Disable 1: Enable
11	**GPIO11**	GPIO11_IES	**Input buffer for GPIO11_IES** 0: Disable 1: Enable
10	**GPIO10**	GPIO10_IES	**Input buffer for GPIO10_IES** 0: Disable 1: Enable
9	**GPIO9**	GPIO9_IES	**Input buffer for GPIO9_IES** 0: Disable 1: Enable
8	**GPIO8**	GPIO8_IES	**Input buffer for GPIO8_IES** 0: Disable 1: Enable
7	**GPIO7**	GPIO7_IES	**Input buffer for GPIO7_IES** 0: Disable 1: Enable
6	**GPIO6**	GPIO6_IES	**Input buffer for GPIO6_IES** 0: Disable 1: Enable
5	**GPIO5**	GPIO5_IES	**Input buffer for GPIO5_IES** 0: Disable 1: Enable
4	**GPIO4**	GPIO4_IES	**Input buffer for GPIO4_IES** 0: Disable 1: Enable
3	**GPIO3**	GPIO3_IES	**Input buffer for GPIO3_IES** 0: Disable 1: Enable
2	**GPIO2**	GPIO2_IES	**Input buffer for GPIO2_IES** 0: Disable 1: Enable
1	**GPIO1**	GPIO1_IES	**Input buffer for GPIO1_IES** 0: Disable 1: Enable
0	**GPIO0**	GPIO0_IES	**Input buffer for GPIO0_IES** 0: Disable 1: Enable

A2020904 GPIO_IES0_SET GPIO IES Control 00000000

Bit	31	30	29	28	27	26	25	24	23	22	21	20	19	18	17	16
Name	**GPIO31**	**GPIO30**	**GPIO29**	**GPIO28**	**GPIO27**	**GPIO26**	**GPIO25**	**GPIO24**	**GPIO23**	**GPIO22**	**GPIO21**	**GPIO20**	**GPIO19**	**GPIO18**	**GPIO17**	**GPIO16**
Type	WO	WO	WO	WO	WO	WO	WO	WO	WO	WO	WO	WO	WO	WO	WO	WO
Reset	0	0	0	0	0	0	0	0	0	0	0	0	0	0	0	0
Bit	15	14	13	12	11	10	9	8	7	6	5	4	3	2	1	0
Name	**GPIO15**	**GPIO14**	**GPIO13**	**GPIO12**	**GPIO11**	**GPIO10**	**GPIO9**	**GPIO8**	**GPIO7**	**GPIO6**	**GPIO5**	**GPIO4**	**GPIO3**	**GPIO2**	**GPIO1**	**GPIO0**
Type	WO	WO	WO	WO	WO	WO	WO	WO	WO	WO	WO	WO	WO	WO	WO	WO
Reset	0	0	0	0	0	0	0	0	0	0	0	0	0	0	0	0

Overview For bitwise access of GPIO_IES0

© 2015 - 2017 MediaTek Inc.

This document contains information that is proprietary to MediaTek Inc. ("MediaTek") and/or its licensor(s).
Any unauthorized use, reproduction or disclosure of this document in whole or in part is strictly prohibited.

Note that the **GPIO_DIN** value is meaningless once is **GPIO_IES** enabled.

Bit(s)	Mnemonic	Name	Description
31	**GPIO31**	GPIO31_IES	**Bitwise SET operation of GPIO31 input buffer** 0: Keep 1: SET bits
30	**GPIO30**	GPIO30_IES	**Bitwise SET operation of GPIO30 input buffer** 0: Keep 1: SET bits
29	**GPIO29**	GPIO29_IES	**Bitwise SET operation of GPIO29 input buffer** 0: Keep 1: SET bits
28	**GPIO28**	GPIO28_IES	**Bitwise SET operation of GPIO28 input buffer** 0: Keep 1: SET bits
27	**GPIO27**	GPIO27_IES	**Bitwise SET operation of GPIO27 input buffer** 0: Keep 1: SET bits
26	**GPIO26**	GPIO26_IES	**Bitwise SET operation of GPIO26 input buffer** 0: Keep 1: SET bits
25	**GPIO25**	GPIO25_IES	**Bitwise SET operation of GPIO25 input buffer** 0: Keep 1: SET bits
24	**GPIO24**	GPIO24_IES	**Bitwise SET operation of GPIO24 input buffer** 0: Keep 1: SET bits
23	**GPIO23**	GPIO23_IES	**Bitwise SET operation of GPIO23 input buffer** 0: Keep 1: SET bits
22	**GPIO22**	GPIO22_IES	**Bitwise SET operation of GPIO22 input buffer** 0: Keep 1: SET bits
21	**GPIO21**	GPIO21_IES	**Bitwise SET operation of GPIO21 input buffer** 0: Keep 1: SET bits
20	**GPIO20**	GPIO20_IES	**Bitwise SET operation of GPIO20 input buffer** 0: Keep 1: SET bits
19	**GPIO19**	GPIO19_IES	**Bitwise SET operation of GPIO19 input buffer** 0: Keep 1: SET bits
18	**GPIO18**	GPIO18_IES	**Bitwise SET operation of GPIO18 input buffer** 0: Keep 1: SET bits
17	**GPIO17**	GPIO17_IES	**Bitwise SET operation of GPIO17 input buffer** 0: Keep 1: SET bits
16	**GPIO16**	GPIO16_IES	**Bitwise SET operation of GPIO16 input buffer** 0: Keep 1: SET bits
15	**GPIO15**	GPIO15_IES	**Bitwise SET operation of GPIO15 input buffer** 0: Keep

© 2015 - 2017 MediaTek Inc.

This document contains information that is proprietary to MediaTek Inc. ("MediaTek") and/or its licensor(s).
Any unauthorized use, reproduction or disclosure of this document in whole or in part is strictly prohibited.

Bit(s)	Mnemonic	Name	Description
			1: SET bits
14	**GPIO14**	GPIO14_IES	**Bitwise SET operation of GPIO14 input buffer** 0: Keep 1: SET bits
13	**GPIO13**	GPIO13_IES	**Bitwise SET operation of GPIO13 input buffer** 0: Keep 1: SET bits
12	**GPIO12**	GPIO12_IES	**Bitwise SET operation of GPIO12 input buffer** 0: Keep 1: SET bits
11	**GPIO11**	GPIO11_IES	**Bitwise SET operation of GPIO11 input buffer** 0: Keep 1: SET bits
10	**GPIO10**	GPIO10_IES	**Bitwise SET operation of GPIO10 input buffer** 0: Keep 1: SET bits
9	**GPIO9**	GPIO9_IES	**Bitwise SET operation of GPIO9 input buffer** 0: Keep 1: SET bits
8	**GPIO8**	GPIO8_IES	**Bitwise SET operation of GPIO8 input buffer** 0: Keep 1: SET bits
7	**GPIO7**	GPIO7_IES	**Bitwise SET operation of GPIO7 input buffer** 0: Keep 1: SET bits
6	**GPIO6**	GPIO6_IES	**Bitwise SET operation of GPIO6 input buffer** 0: Keep 1: SET bits
5	**GPIO5**	GPIO5_IES	**Bitwise SET operation of GPIO5 input buffer** 0: Keep 1: SET bits
4	**GPIO4**	GPIO4_IES	**Bitwise SET operation of GPIO4 input buffer** 0: Keep 1: SET bits
3	**GPIO3**	GPIO3_IES	**Bitwise SET operation of GPIO3 input buffer** 0: Keep 1: SET bits
2	**GPIO2**	GPIO2_IES	**Bitwise SET operation of GPIO2 input buffer** 0: Keep 1: SET bits
1	**GPIO1**	GPIO1_IES	**Bitwise SET operation of GPIO1 input buffer** 0: Keep 1: SET bits
0	**GPIO0**	GPIO0_IES	**Bitwise SET operation of GPIO0 input buffer** 0: Keep 1: SET bits

A2020908 **GPIO_IES0_CLR** **GPIO IES Control** **00000000**

Bit	31	30	29	28	27	26	25	24	23	22	21	20	19	18	17	16
Name	GPIO31	GPIO30	GPIO29	GPIO28	GPIO27	GPIO26	GPIO25	GPIO24	GPIO23	GPIO22	GPIO21	GPIO20	GPIO19	GPIO18	GPIO17	GPIO16
Type	WO	WO	WO	WO	WO	WO	WO	WO	WO	WO	WO	WO	WO	WO	WO	WO

© 2015 - 2017 MediaTek Inc.

This document contains information that is proprietary to MediaTek Inc. ("MediaTek") and/or its licensor(s).
Any unauthorized use, reproduction or disclosure of this document in whole or in part is strictly prohibited.

Reset	0	0	0	0	0	0	0	0	0	0	0	0	0	0	0	0
Bit	15	14	13	12	11	10	9	8	7	6	5	4	3	2	1	0
Name	GPIO15	GPIO14	GPIO13	GPIO12	GPIO11	GPIO10	GPIO9	GPIO8	GPIO7	GPIO6	GPIO5	GPIO4	GPIO3	GPIO2	GPIO1	GPIO0
Type	WO	WO	WO	WO	WO	WO	WO	WO	WO	WO	WO	WO	WO	WO	WO	WO
Reset	0	0	0	0	0	0	0	0	0	0	0	0	0	0	0	0

Overview For bitwise access of GPIO_IES0

Note that the **GPIO_DIN** value is meaningless once **GPIO_IES** is enabled.

Bit(s)	Mnemonic	Name	Description
31	**GPIO31**	GPIO31_IES	**Bitwise CLR operation of GPIO31 input buffer** 0: Keep 1: CLR bits
30	**GPIO30**	GPIO30_IES	**Bitwise CLR operation of GPIO30 input buffer** 0: Keep 1: CLR bits
29	**GPIO29**	GPIO29_IES	**Bitwise CLR operation of GPIO29 input buffer** 0: Keep 1: CLR bits
28	**GPIO28**	GPIO28_IES	**Bitwise CLR operation of GPIO28 input buffer** 0: Keep 1: CLR bits
27	**GPIO27**	GPIO27_IES	**Bitwise CLR operation of GPIO27 input buffer** 0: Keep 1: CLR bits
26	**GPIO26**	GPIO26_IES	**Bitwise CLR operation of GPIO26 input buffer** 0: Keep 1: CLR bits
25	**GPIO25**	GPIO25_IES	**Bitwise CLR operation of GPIO25 input buffer** 0: Keep 1: CLR bits
24	**GPIO24**	GPIO24_IES	**Bitwise CLR operation of GPIO24 input buffer** 0: Keep 1: CLR bits
23	**GPIO23**	GPIO23_IES	**Bitwise CLR operation of GPIO23 input buffer** 0: Keep 1: CLR bits
22	**GPIO22**	GPIO22_IES	**Bitwise CLR operation of GPIO22 input buffer** 0: Keep 1: CLR bits
21	**GPIO21**	GPIO21_IES	**Bitwise CLR operation of GPIO21 input buffer** 0: Keep 1: CLR bits
20	**GPIO20**	GPIO20_IES	**Bitwise CLR operation of GPIO20 input buffer** 0: Keep 1: CLR bits
19	**GPIO19**	GPIO19_IES	**Bitwise CLR operation of GPIO19 input buffer** 0: Keep 1: CLR bits
18	**GPIO18**	GPIO18_IES	**Bitwise CLR operation of GPIO18 input buffer** 0: Keep 1: CLR bits
17	**GPIO17**	GPIO17_IES	**Bitwise CLR operation of GPIO17 input buffer**

© 2015 - 2017 MediaTek Inc.

This document contains information that is proprietary to MediaTek Inc. ("MediaTek") and/or its licensor(s).
Any unauthorized use, reproduction or disclosure of this document in whole or in part is strictly prohibited.

Bit(s)	Mnemonic	Name	Description
			0: Keep 1: CLR bits
16	**GPIO16**	GPIO16_IES	**Bitwise CLR operation of GPIO16 input buffer** 0: Keep 1: CLR bits
15	**GPIO15**	GPIO15_IES	**Bitwise CLR operation of GPIO15 input buffer** 0: Keep 1: CLR bits
14	**GPIO14**	GPIO14_IES	**Bitwise CLR operation of GPIO14 input buffer** 0: Keep 1: CLR bits
13	**GPIO13**	GPIO13_IES	**Bitwise CLR operation of GPIO13 input buffer** 0: Keep 1: CLR bits
12	**GPIO12**	GPIO12_IES	**Bitwise CLR operation of GPIO12 input buffer** 0: Keep 1: CLR bits
11	**GPIO11**	GPIO11_IES	**Bitwise CLR operation of GPIO11 input buffer** 0: Keep 1: CLR bits
10	**GPIO10**	GPIO10_IES	**Bitwise CLR operation of GPIO10 input buffer** 0: Keep 1: CLR bits
9	**GPIO9**	GPIO9_IES	**Bitwise CLR operation of GPIO9 input buffer** 0: Keep 1: CLR bits
8	**GPIO8**	GPIO8_IES	**Bitwise CLR operation of GPIO8 input buffer** 0: Keep 1: CLR bits
7	**GPIO7**	GPIO7_IES	**Bitwise CLR operation of GPIO7 input buffer** 0: Keep 1: CLR bits
6	**GPIO6**	GPIO6_IES	**Bitwise CLR operation of GPIO6 input buffer** 0: Keep 1: CLR bits
5	**GPIO5**	GPIO5_IES	**Bitwise CLR operation of GPIO5 input buffer** 0: Keep 1: CLR bits
4	**GPIO4**	GPIO4_IES	**Bitwise CLR operation of GPIO4 input buffer** 0: Keep 1: CLR bits
3	**GPIO3**	GPIO3_IES	**Bitwise CLR operation of GPIO3 input buffer** 0: Keep 1: CLR bits
2	**GPIO2**	GPIO2_IES	**Bitwise CLR operation of GPIO2 input buffer** 0: Keep 1: CLR bits
1	**GPIO1**	GPIO1_IES	**Bitwise CLR operation of GPIO1 input buffer** 0: Keep 1: CLR bits
0	**GPIO0**	GPIO0_IES	**Bitwise CLR operation of GPIO0 input buffer** 0: Keep 1: CLR bits

© 2015 - 2017 MediaTek Inc.

This document contains information that is proprietary to MediaTek Inc. (“MediaTek”) and/or its licensor(s).
Any unauthorized use, reproduction or disclosure of this document in whole or in part is strictly prohibited.

A2020910 GPIO_IES1 GPIO IES Control 0007FFFF

Bit	31	30	29	28	27	26	25	24	23	22	21	20	19	18	17	16
Name																GPIO 48
Type																RW
Reset																1
Bit	15	14	13	12	11	10	9	8	7	6	5	4	3	2	1	0
Name	GPIO 47	GPIO 46	GPIO 45	GPIO 44	GPIO 43	GPIO 42	GPIO 41	GPIO 40	GPIO 39	GPIO 38	GPIO 37	GPIO 36	GPIO 35	GPIO 34	GPIO 33	GPIO 32
Type	RW	RW	RW	RW	RW	RW	RW	RW	RW	RW	RW	RW	RW	RW	RW	RW
Reset	1	1	1	1	1	1	1	1	1	1	1	1	1	1	1	1

Overview Configures GPIO input enabling control

Note that the **GPIO_DIN** value is meaningless once **GPIO_IES** is enabled.

Bit(s)	Mnemonic	Name	Description
16	**GPIO48**	GPIO48_IES	**Input buffer for GPIO48_IES** 0: Disable 1: Enable
15	**GPIO47**	GPIO47_IES	**Input buffer for GPIO47_IES** 0: Disable 1: Enable
14	**GPIO46**	GPIO46_IES	**Input buffer for GPIO46_IES** 0: Disable 1: Enable
13	**GPIO45**	GPIO45_IES	**Input buffer for GPIO45_IES** 0: Disable 1: Enable
12	**GPIO44**	GPIO44_IES	**Input buffer for GPIO44_IES** 0: Disable 1: Enable
11	**GPIO43**	GPIO43_IES	**Input buffer for GPIO43_IES** 0: Disable 1: Enable
10	**GPIO42**	GPIO42_IES	**Input buffer for GPIO42_IES** 0: Disable 1: Enable
9	**GPIO41**	GPIO41_IES	**Input buffer for GPIO41_IES** 0: Disable 1: Enable
8	**GPIO40**	GPIO40_IES	**Input buffer for GPIO40_IES** 0: Disable 1: Enable
7	**GPIO39**	GPIO39_IES	**Input buffer for GPIO39_IES** 0: Disable 1: Enable
6	**GPIO38**	GPIO38_IES	**Input buffer for GPIO38_IES** 0: Disable 1: Enable
5	**GPIO37**	GPIO37_IES	**Input buffer for GPIO37_IES** 0: Disable 1: Enable
4	**GPIO36**	GPIO36_IES	**Input buffer for GPIO36_IES**

© 2015 - 2017 MediaTek Inc.

This document contains information that is proprietary to MediaTek Inc. (“MediaTek”) and/or its licensor(s).
Any unauthorized use, reproduction or disclosure of this document in whole or in part is strictly prohibited.

Bit(s)	Mnemonic	Name	Description
			0: Disable 1: Enable
3	**GPIO35**	GPIO35_IES	**Input buffer for GPIO35_IES** 0: Disable 1: Enable
2	**GPIO34**	GPIO34_IES	**Input buffer for GPIO34_IES** 0: Disable 1: Enable
1	**GPIO33**	GPIO33_IES	**Input buffer for GPIO33_IES** 0: Disable 1: Enable
0	**GPIO32**	GPIO32_IES	**Input buffer for GPIO32_IES** 0: Disable 1: Enable

A2020914 **GPIO_IES1_SET** **GPIO IES Control** **00000000**

Bit	31	30	29	28	27	26	25	24	23	22	21	20	19	18	17	16
Name																**GPIO48**
Type																WO
Reset																0
Bit	15	14	13	12	11	10	9	8	7	6	5	4	3	2	1	0
Name	**GPIO47**	**GPIO46**	**GPIO45**	**GPIO44**	**GPIO43**	**GPIO42**	**GPIO41**	**GPIO40**	**GPIO39**	**GPIO38**	**GPIO37**	**GPIO36**	**GPIO35**	**GPIO34**	**GPIO33**	**GPIO32**
Type	WO	WO	WO	WO	WO	WO	WO	WO	WO	WO	WO	WO	WO	WO	WO	WO
Reset	0	0	0	0	0	0	0	0	0	0	0	0	0	0	0	0

Overview For bitwise access of GPIO_IES1

Note that the **GPIO_DIN** value is meaningless once **GPIO_IES** is enabled.

Bit(s)	Mnemonic	Name	Description
16	**GPIO48**	GPIO48_IES	**Bitwise SET operation of GPIO48 input buffer** 0: Keep 1: SET bits
15	**GPIO47**	GPIO47_IES	**Bitwise SET operation of GPIO47 input buffer** 0: Keep 1: SET bits
14	**GPIO46**	GPIO46_IES	**Bitwise SET operation of GPIO46 input buffer** 0: Keep 1: SET bits
13	**GPIO45**	GPIO45_IES	**Bitwise SET operation of GPIO45 input buffer** 0: Keep 1: SET bits
12	**GPIO44**	GPIO44_IES	**Bitwise SET operation of GPIO44 input buffer** 0: Keep 1: SET bits
11	**GPIO43**	GPIO43_IES	**Bitwise SET operation of GPIO43 input buffer** 0: Keep 1: SET bits
10	**GPIO42**	GPIO42_IES	**Bitwise SET operation of GPIO42 input buffer** 0: Keep 1: SET bits

© 2015 - 2017 MediaTek Inc.

This document contains information that is proprietary to MediaTek Inc. ("MediaTek") and/or its licensor(s).
Any unauthorized use, reproduction or disclosure of this document in whole or in part is strictly prohibited.

Bit(s)	Mnemonic	Name	Description
9	**GPIO41**	GPIO41_IES	**Bitwise SET operation of GPIO41 input buffer** 0: Keep 1: SET bits
8	**GPIO40**	GPIO40_IES	**Bitwise SET operation of GPIO40 input buffer** 0: Keep 1: SET bits
7	**GPIO39**	GPIO39_IES	**Bitwise SET operation of GPIO39 input buffer** 0: Keep 1: SET bits
6	**GPIO38**	GPIO38_IES	**Bitwise SET operation of GPIO38 input buffer** 0: Keep 1: SET bits
5	**GPIO37**	GPIO37_IES	**Bitwise SET operation of GPIO37 input buffer** 0: Keep 1: SET bits
4	**GPIO36**	GPIO36_IES	**Bitwise SET operation of GPIO36 input buffer** 0: Keep 1: SET bits
3	**GPIO35**	GPIO35_IES	**Bitwise SET operation of GPIO35 input buffer** 0: Keep 1: SET bits
2	**GPIO34**	GPIO34_IES	**Bitwise SET operation of GPIO34 input buffer** 0: Keep 1: SET bits
1	**GPIO33**	GPIO33_IES	**Bitwise SET operation of GPIO33 input buffer** 0: Keep 1: SET bits
0	**GPIO32**	GPIO32_IES	**Bitwise SET operation of GPIO32 input buffer** 0: Keep 1: SET bits

A2020918 **GPIO_IES1_CLR** **GPIO IES Control** **00000000**

Bit	31	30	29	28	27	26	25	24	23	22	21	20	19	18	17	16
Name																**GPIO48**
Type																WO
Reset																0
Bit	15	14	13	12	11	10	9	8	7	6	5	4	3	2	1	0
Name	**GPIO47**	**GPIO46**	**GPIO45**	**GPIO44**	**GPIO43**	**GPIO42**	**GPIO41**	**GPIO40**	**GPIO39**	**GPIO38**	**GPIO37**	**GPIO36**	**GPIO35**	**GPIO34**	**GPIO33**	**GPIO32**
Type	WO	WO	WO	WO	WO	WO	WO	WO	WO	WO	WO	WO	WO	WO	WO	WO
Reset	0	0	0	0	0	0	0	0	0	0	0	0	0	0	0	0

Overview For bitwise access of GPIO_IES1

Note that the **GPIO_DIN** value is meaningless once **GPIO_IES** is enabled.

Bit(s)	Mnemonic	Name	Description
16	**GPIO48**	GPIO48_IES	**Bitwise CLR operation of GPIO48 input buffer** 0: Keep 1: CLR bits
15	**GPIO47**	GPIO47_IES	**Bitwise CLR operation of GPIO47 input buffer** 0: Keep

© 2015 - 2017 MediaTek Inc.

This document contains information that is proprietary to MediaTek Inc. ("MediaTek") and/or its licensor(s).
Any unauthorized use, reproduction or disclosure of this document in whole or in part is strictly prohibited.

Bit(s)	Mnemonic	Name	Description
			1: CLR bits
14	**GPIO46**	GPIO46_IES	**Bitwise CLR operation of GPIO46 input buffer** 0: Keep 1: CLR bits
13	**GPIO45**	GPIO45_IES	**Bitwise CLR operation of GPIO45 input buffer** 0: Keep 1: CLR bits
12	**GPIO44**	GPIO44_IES	**Bitwise CLR operation of GPIO44 input buffer** 0: Keep 1: CLR bits
11	**GPIO43**	GPIO43_IES	**Bitwise CLR operation of GPIO43 input buffer** 0: Keep 1: CLR bits
10	**GPIO42**	GPIO42_IES	**Bitwise CLR operation of GPIO42 input buffer** 0: Keep 1: CLR bits
9	**GPIO41**	GPIO41_IES	**Bitwise CLR operation of GPIO41 input buffer** 0: Keep 1: CLR bits
8	**GPIO40**	GPIO40_IES	**Bitwise CLR operation of GPIO40 input buffer** 0: Keep 1: CLR bits
7	**GPIO39**	GPIO39_IES	**Bitwise CLR operation of GPIO39 input buffer** 0: Keep 1: CLR bits
6	**GPIO38**	GPIO38_IES	**Bitwise CLR operation of GPIO38 input buffer** 0: Keep 1: CLR bits
5	**GPIO37**	GPIO37_IES	**Bitwise CLR operation of GPIO37 input buffer** 0: Keep 1: CLR bits
4	**GPIO36**	GPIO36_IES	**Bitwise CLR operation of GPIO36 input buffer** 0: Keep 1: CLR bits
3	**GPIO35**	GPIO35_IES	**Bitwise CLR operation of GPIO35 input buffer** 0: Keep 1: CLR bits
2	**GPIO34**	GPIO34_IES	**Bitwise CLR operation of GPIO34 input buffer** 0: Keep 1: CLR bits
1	**GPIO33**	GPIO33_IES	**Bitwise CLR operation of GPIO33 input buffer** 0: Keep 1: CLR bits
0	**GPIO32**	GPIO32_IES	**Bitwise CLR operation of GPIO32 input buffer** 0: Keep 1: CLR bits

A2020A00 GPIO_PUPD0 GPIO PUPD Control F9E0FBF0

Bit	31	30	29	28	27	26	25	24	23	22	21	20	19	18	17	16
Name	GPIO31	GPIO30	GPIO29	GPIO28	GPIO27	GPIO26	GPIO25	GPIO24	GPIO23	GPIO22	GPIO21	GPIO20	GPIO19	GPIO18	GPIO17	GPIO16
Type	RW	RW	RW	RW	RW	RW	RW	RW	RW	RW	RW	RW	RW	RW	RW	RW
Reset	1	1	1	1	1	0	0	1	1	1	1	0	0	0	0	0

© 2015 - 2017 MediaTek Inc.

This document contains information that is proprietary to MediaTek Inc. ("MediaTek") and/or its licensor(s).
Any unauthorized use, reproduction or disclosure of this document in whole or in part is strictly prohibited.

Bit	15	14	13	12	11	10	9	8	7	6	5	4	3	2	1	0
Name	GPIO15	GPIO14	GPIO13	GPIO12	GPIO11		GPIO9	GPIO8	GPIO7	GPIO6	GPIO5	GPIO4				
Type	RW	RW	RW	RW	RW		RW	RW	RW	RW	RW	RW				
Reset	1	1	1	1	1		1	1	1	1	1	1				

Overview Configures GPIO PUPD control

Bit(s)	Mnemonic	Name	Description
31	**GPIO31**	GPIO31_PUPD	**PUPD for GPIO31_PUPD** 0: Disable 1: Enable
30	**GPIO30**	GPIO30_PUPD	**PUPD for GPIO30_PUPD** 0: Disable 1: Enable
29	**GPIO29**	GPIO29_PUPD	**PUPD for GPIO29_PUPD** 0: Disable 1: Enable
28	**GPIO28**	GPIO28_PUPD	**PUPD for GPIO28_PUPD** 0: Disable 1: Enable
27	**GPIO27**	GPIO27_PUPD	**PUPD for GPIO27_PUPD** 0: Disable 1: Enable
26	**GPIO26**	GPIO26_PUPD	**PUPD for GPIO26_PUPD** 0: Disable 1: Enable
25	**GPIO25**	GPIO25_PUPD	**PUPD for GPIO25_PUPD** 0: Disable 1: Enable
24	**GPIO24**	GPIO24_PUPD	**PUPD for GPIO24_PUPD** 0: Disable 1: Enable
23	**GPIO23**	GPIO23_PUPD	**PUPD for GPIO23_PUPD** 0: Disable 1: Enable
22	**GPIO22**	GPIO22_PUPD	**PUPD for GPIO22_PUPD** 0: Disable 1: Enable
21	**GPIO21**	GPIO21_PUPD	**PUPD for GPIO21_PUPD** 0: Disable 1: Enable
20	**GPIO20**	GPIO20_PUPD	**PUPD for GPIO20_PUPD** 0: Disable 1: Enable
19	**GPIO19**	GPIO19_PUPD	**PUPD for GPIO19_PUPD** 0: Disable 1: Enable
18	**GPIO18**	GPIO18_PUPD	**PUPD for GPIO18_PUPD** 0: Disable 1: Enable
17	**GPIO17**	GPIO17_PUPD	**PUPD for GPIO17_PUPD** 0: Disable 1: Enable
16	**GPIO16**	GPIO16_PUPD	**PUPD for GPIO16_PUPD** 0: Disable

© 2015 - 2017 MediaTek Inc.

This document contains information that is proprietary to MediaTek Inc. (“MediaTek”) and/or its licensor(s).
Any unauthorized use, reproduction or disclosure of this document in whole or in part is strictly prohibited.

Bit(s)	Mnemonic	Name	Description
			1: Enable
15	**GPIO15**	GPIO15_PUPD	**PUPD for GPIO15_PUPD** 0: Disable 1: Enable
14	**GPIO14**	GPIO14_PUPD	**PUPD for GPIO14_PUPD** 0: Disable 1: Enable
13	**GPIO13**	GPIO13_PUPD	**PUPD for GPIO13_PUPD** 0: Disable 1: Enable
12	**GPIO12**	GPIO12_PUPD	**PUPD for GPIO12_PUPD** 0: Disable 1: Enable
11	**GPIO11**	GPIO11_PUPD	**PUPD for GPIO11_PUPD** 0: Disable 1: Enable
9	**GPIO9**	GPIO9_PUPD	**PUPD for GPIO9_PUPD** 0: Disable 1: Enable
8	**GPIO8**	GPIO8_PUPD	**PUPD for GPIO8_PUPD** 0: Disable 1: Enable
7	**GPIO7**	GPIO7_PUPD	**PUPD for GPIO7_PUPD** 0: Disable 1: Enable
6	**GPIO6**	GPIO6_PUPD	**PUPD for GPIO6_PUPD** 0: Disable 1: Enable
5	**GPIO5**	GPIO5_PUPD	**PUPD for GPIO5_PUPD** 0: Disable 1: Enable
4	**GPIO4**	GPIO4_PUPD	**PUPD for GPIO4_PUPD** 0: Disable 1: Enable

A2020A04 GPIO_PUPD0_SET GPIO PUPD Control 00000000

Bit	31	30	29	28	27	26	25	24	23	22	21	20	19	18	17	16
Name	GPIO31	GPIO30	GPIO29	GPIO28	GPIO27	GPIO26	GPIO25	GPIO24	GPIO23	GPIO22	GPIO21	GPIO20	GPIO19	GPIO18	GPIO17	GPIO16
Type	WO	WO	WO	WO	WO	WO	WO	WO	WO	WO	WO	WO	WO	WO	WO	WO
Reset	0	0	0	0	0	0	0	0	0	0	0	0	0	0	0	0
Bit	15	14	13	12	11	10	9	8	7	6	5	4	3	2	1	0
Name	GPIO15	GPIO14	GPIO13	GPIO12	GPIO11		GPIO9	GPIO8	GPIO7	GPIO6	GPIO5	GPIO4				
Type	WO	WO	WO	WO	WO		WO	WO	WO	WO	WO	WO				
Reset	0	0	0	0	0		0	0	0	0	0	0				

Overview For bitwise access of GPIO_PUPD0

Bit(s)	Mnemonic	Name	Description
31	**GPIO31**	GPIO31_PUPD	**Bitwise SET operation of GPIO31 PUPD** 0: Keep 1: SET bits

© 2015 - 2017 MediaTek Inc.
This document contains information that is proprietary to MediaTek Inc. ("MediaTek") and/or its licensor(s).
Any unauthorized use, reproduction or disclosure of this document in whole or in part is strictly prohibited.

Bit(s)	Mnemonic	Name	Description
30	**GPIO30**	GPIO30_PUPD	**Bitwise SET operation of GPIO30 PUPD** 0: Keep 1: SET bits
29	**GPIO29**	GPIO29_PUPD	**Bitwise SET operation of GPIO29 PUPD** 0: Keep 1: SET bits
28	**GPIO28**	GPIO28_PUPD	**Bitwise SET operation of GPIO28 PUPD** 0: Keep 1: SET bits
27	**GPIO27**	GPIO27_PUPD	**Bitwise SET operation of GPIO27 PUPD** 0: Keep 1: SET bits
26	**GPIO26**	GPIO26_PUPD	**Bitwise SET operation of GPIO26 PUPD** 0: Keep 1: SET bits
25	**GPIO25**	GPIO25_PUPD	**Bitwise SET operation of GPIO25 PUPD** 0: Keep 1: SET bits
24	**GPIO24**	GPIO24_PUPD	**Bitwise SET operation of GPIO24 PUPD** 0: Keep 1: SET bits
23	**GPIO23**	GPIO23_PUPD	**Bitwise SET operation of GPIO23 PUPD** 0: Keep 1: SET bits
22	**GPIO22**	GPIO22_PUPD	**Bitwise SET operation of GPIO22 PUPD** 0: Keep 1: SET bits
21	**GPIO21**	GPIO21_PUPD	**Bitwise SET operation of GPIO21 PUPD** 0: Keep 1: SET bits
20	**GPIO20**	GPIO20_PUPD	**Bitwise SET operation of GPIO20 PUPD** 0: Keep 1: SET bits
19	**GPIO19**	GPIO19_PUPD	**Bitwise SET operation of GPIO19 PUPD** 0: Keep 1: SET bits
18	**GPIO18**	GPIO18_PUPD	**Bitwise SET operation of GPIO18 PUPD** 0: Keep 1: SET bits
17	**GPIO17**	GPIO17_PUPD	**Bitwise SET operation of GPIO17 PUPD** 0: Keep 1: SET bits
16	**GPIO16**	GPIO16_PUPD	**Bitwise SET operation of GPIO16 PUPD** 0: Keep 1: SET bits
15	**GPIO15**	GPIO15_PUPD	**Bitwise SET operation of GPIO15 PUPD** 0: Keep 1: SET bits
14	**GPIO14**	GPIO14_PUPD	**Bitwise SET operation of GPIO14 PUPD** 0: Keep 1: SET bits
13	**GPIO13**	GPIO13_PUPD	**Bitwise SET operation of GPIO13 PUPD** 0: Keep 1: SET bits

© 2015 - 2017 MediaTek Inc.

This document contains information that is proprietary to MediaTek Inc. (“MediaTek”) and/or its licensor(s).
Any unauthorized use, reproduction or disclosure of this document in whole or in part is strictly prohibited.

Bit(s)	Mnemonic	Name	Description
12	**GPIO12**	GPIO12_PUPD	**Bitwise SET operation of GPIO12 PUPD** 0: Keep 1: SET bits
11	**GPIO11**	GPIO11_PUPD	**Bitwise SET operation of GPIO11 PUPD** 0: Keep 1: SET bits
9	**GPIO9**	GPIO9_PUPD	**Bitwise SET operation of GPIO9 PUPD** 0: Keep 1: SET bits
8	**GPIO8**	GPIO8_PUPD	**Bitwise SET operation of GPIO8 PUPD** 0: Keep 1: SET bits
7	**GPIO7**	GPIO7_PUPD	**Bitwise SET operation of GPIO7 PUPD** 0: Keep 1: SET bits
6	**GPIO6**	GPIO6_PUPD	**Bitwise SET operation of GPIO6 PUPD** 0: Keep 1: SET bits
5	**GPIO5**	GPIO5_PUPD	**Bitwise SET operation of GPIO5 PUPD** 0: Keep 1: SET bits
4	**GPIO4**	GPIO4_PUPD	**Bitwise SET operation of GPIO4 PUPD** 0: Keep 1: SET bits

A2020A08 **GPIO_PUPD0_CLR** **GPIO PUPD Control** **00000000**

Bit	31	30	29	28	27	26	25	24	23	22	21	20	19	18	17	16
Name	GPIO31	GPIO30	GPIO29	GPIO28	GPIO27	GPIO26	GPIO25	GPIO24	GPIO23	GPIO22	GPIO21	GPIO20	GPIO19	GPIO18	GPIO17	GPIO16
Type	WO	WO	WO	WO	WO	WO	WO	WO	WO	WO	WO	WO	WO	WO	WO	WO
Reset	0	0	0	0	0	0	0	0	0	0	0	0	0	0	0	0
Bit	15	14	13	12	11	10	9	8	7	6	5	4	3	2	1	0
Name	GPIO15	GPIO14	GPIO13	GPIO12	GPIO11		GPIO9	GPIO8	GPIO7	GPIO6	GPIO5	GPIO4				
Type	WO	WO	WO	WO	WO		WO	WO	WO	WO	WO	WO				
Reset	0	0	0	0	0		0	0	0	0	0	0				

Overview For bitwise access of GPIO_PUPD0

Bit(s)	Mnemonic	Name	Description
31	**GPIO31**	GPIO31_PUPD	**Bitwise CLR operation of GPIO31 PUPD** 0: Keep 1: CLR bits
30	**GPIO30**	GPIO30_PUPD	**Bitwise CLR operation of GPIO30 PUPD** 0: Keep 1: CLR bits
29	**GPIO29**	GPIO29_PUPD	**Bitwise CLR operation of GPIO29 PUPD** 0: Keep 1: CLR bits
28	**GPIO28**	GPIO28_PUPD	**Bitwise CLR operation of GPIO28 PUPD** 0: Keep 1: CLR bits

© 2015 - 2017 MediaTek Inc.

This document contains information that is proprietary to MediaTek Inc. ("MediaTek") and/or its licensor(s).
Any unauthorized use, reproduction or disclosure of this document in whole or in part is strictly prohibited.

Bit(s)	Mnemonic	Name	Description
27	**GPIO27**	GPIO27_PUPD	**Bitwise CLR operation of GPIO27 PUPD** 0: Keep 1: CLR bits
26	**GPIO26**	GPIO26_PUPD	**Bitwise CLR operation of GPIO26 PUPD** 0: Keep 1: CLR bits
25	**GPIO25**	GPIO25_PUPD	**Bitwise CLR operation of GPIO25 PUPD** 0: Keep 1: CLR bits
24	**GPIO24**	GPIO24_PUPD	**Bitwise CLR operation of GPIO24 PUPD** 0: Keep 1: CLR bits
23	**GPIO23**	GPIO23_PUPD	**Bitwise CLR operation of GPIO23 PUPD** 0: Keep 1: CLR bits
22	**GPIO22**	GPIO22_PUPD	**Bitwise CLR operation of GPIO22 PUPD** 0: Keep 1: CLR bits
21	**GPIO21**	GPIO21_PUPD	**Bitwise CLR operation of GPIO21 PUPD** 0: Keep 1: CLR bits
20	**GPIO20**	GPIO20_PUPD	**Bitwise CLR operation of GPIO20 PUPD** 0: Keep 1: CLR bits
19	**GPIO19**	GPIO19_PUPD	**Bitwise CLR operation of GPIO19 PUPD** 0: Keep 1: SET bits
18	**GPIO18**	GPIO18_PUPD	**Bitwise CLR operation of GPIO18 PUPD** 0: Keep 1: SET bits
17	**GPIO17**	GPIO17_PUPD	**Bitwise CLR operation of GPIO17 PUPD** 0: Keep 1: CLR bits
16	**GPIO16**	GPIO16_PUPD	**Bitwise CLR operation of GPIO16 PUPD** 0: Keep 1: SET bits
15	**GPIO15**	GPIO15_PUPD	**Bitwise CLR operation of GPIO15 PUPD** 0: Keep 1: SET bits
14	**GPIO14**	GPIO14_PUPD	**Bitwise CLR operation of GPIO14 PUPD** 0: Keep 1: CLR bits
13	**GPIO13**	GPIO13_PUPD	**Bitwise CLR operation of GPIO13 PUPD** 0: Keep 1: SET bits
12	**GPIO12**	GPIO12_PUPD	**Bitwise CLR operation of GPIO12 PUPD** 0: Keep 1: SET bits
11	**GPIO11**	GPIO11_PUPD	**Bitwise CLR operation of GPIO11 PUPD** 0: Keep 1: CLR bits
9	**GPIO9**	GPIO9_PUPD	**Bitwise CLR operation of GPIO9 PUPD** 0: Keep 1: SET bits

© 2015 - 2017 MediaTek Inc.

This document contains information that is proprietary to MediaTek Inc. ("MediaTek") and/or its licensor(s).
Any unauthorized use, reproduction or disclosure of this document in whole or in part is strictly prohibited.

Bit(s)	Mnemonic	Name	Description
8	**GPIO8**	GPIO8_PUPD	**Bitwise CLR operation of GPIO8 PUPD** 0: Keep 1: SET bits
7	**GPIO7**	GPIO7_PUPD	**Bitwise CLR operation of GPIO7 PUPD** 0: Keep 1: CLR bits
6	**GPIO6**	GPIO6_PUPD	**Bitwise CLR operation of GPIO6 PUPD** 0: Keep 1: SET bits
5	**GPIO5**	GPIO5_PUPD	**Bitwise CLR operation of GPIO5 PUPD** 0: Keep 1: SET bits
4	**GPIO4**	GPIO4_PUPD	**Bitwise CLR operation of GPIO4 PUPD** 0: Keep 1: CLR bits

A2020A10 GPIO_PUPD1 GPIO PUPD Control 0001FF77

Bit	31	30	29	28	27	26	25	24	23	22	21	20	19	18	17	16
Name																GPIO 48
Type																RW
Reset																1
Bit	15	14	13	12	11	10	9	8	7	6	5	4	3	2	1	0
Name	GPIO 47	GPIO 46	GPIO 45	GPIO 44	GPIO 43	GPIO 42	GPIO 41	GPIO 40	GPIO 39	GPIO 38	GPIO 37	GPIO 36	GPIO 35	GPIO 34	GPIO 33	GPIO 32
Type	RW	RW	RW	RW	RW	RW	RW	RW	RW	RW	RW	RW	RW	RW	RW	RW
Reset	1	1	1	1	1	1	1	1	0	1	1	1	0	1	1	1

Overview Configures GPIO PUPD control

Bit(s)	Mnemonic	Name	Description
16	**GPIO48**	GPIO48_PUPD	**PUPD for GPIO48** 0: Disable 1: Enable
15	**GPIO47**	GPIO47_PUPD	**PUPD for GPIO47** 0: Disable 1: Enable
14	**GPIO46**	GPIO46_PUPD	**PUPD for GPIO46** 0: Disable 1: Enable
13	**GPIO45**	GPIO45_PUPD	**PUPD for GPIO45** 0: Disable 1: Enable
12	**GPIO44**	GPIO44_PUPD	**PUPD for GPIO44** 0: Disable 1: Enable
11	**GPIO43**	GPIO43_PUPD	**PUPD for GPIO43** 0: Disable 1: Enable
10	**GPIO42**	GPIO42_PUPD	**PUPD for GPIO42** 0: Disable 1: Enable
9	**GPIO41**	GPIO41_PUPD	**PUPD for GPIO41** 0: Disable

© 2015 - 2017 MediaTek Inc.

This document contains information that is proprietary to MediaTek Inc. ("MediaTek") and/or its licensor(s).
Any unauthorized use, reproduction or disclosure of this document in whole or in part is strictly prohibited.

Bit(s)	Mnemonic	Name	Description
			1: Enable
8	**GPIO40**	GPIO40_PUPD	**PUPD for GPIO40** 0: Disable 1: Enable
7	**GPIO39**	GPIO39_PUPD	**PUPD for GPIO39** 0: Disable 1: Enable
6	**GPIO38**	GPIO38_PUPD	**PUPD for GPIO38** 0: Disable 1: Enable
5	**GPIO37**	GPIO37_PUPD	**PUPD for GPIO37** 0: Disable 1: Enable
4	**GPIO36**	GPIO36_PUPD	**PUPD for GPIO36** 0: Disable 1: Enable
3	**GPIO35**	GPIO35_PUPD	**PUPD for GPIO35** 0: Disable 1: Enable
2	**GPIO34**	GPIO34_PUPD	**PUPD for GPIO34** 0: Disable 1: Enable
1	**GPIO33**	GPIO33_PUPD	**PUPD for GPIO33** 0: Disable 1: Enable
0	**GPIO32**	GPIO32_PUPD	**PUPD for GPIO32** 0: Disable 1: Enable

A2020A14 **GPIO_PUPD1_SET** **GPIO PUPD Control** **00000000**

Bit	31	30	29	28	27	26	25	24	23	22	21	20	19	18	17	16
Name																GPIO 48
Type																WO
Reset																0
Bit	15	14	13	12	11	10	9	8	7	6	5	4	3	2	1	0
Name	GPIO 47	GPIO 46	GPIO 45	GPIO 44	GPIO 43	GPIO 42	GPIO 41	GPIO 40	GPIO 39	GPIO 38	GPIO 37	GPIO 36	GPIO 35	GPIO 34	GPIO 33	GPIO 32
Type	WO	WO	WO	WO	WO	WO	WO	WO	WO	WO	WO	WO	WO	WO	WO	WO
Reset	0	0	0	0	0	0	0	0	0	0	0	0	0	0	0	0

Overview For bitwise access of GPIO_PUPD1

Bit(s)	Mnemonic	Name	Description
16	**GPIO48**	GPIO48_PUPD	**Bitwise SET operation of GPIO48 PUPD** 0: Keep 1: SET bits
15	**GPIO47**	GPIO47_PUPD	**Bitwise SET operation of GPIO47 PUPD** 0: Keep 1: SET bits
14	**GPIO46**	GPIO46_PUPD	**Bitwise SET operation of GPIO46 PUPD** 0: Keep 1: SET bits

© 2015 - 2017 MediaTek Inc.

This document contains information that is proprietary to MediaTek Inc. ("MediaTek") and/or its licensor(s).
Any unauthorized use, reproduction or disclosure of this document in whole or in part is strictly prohibited.

Bit(s)	Mnemonic	Name	Description
13	**GPIO45**	GPIO45_PUPD	**Bitwise SET operation of GPIO45 PUPD** 0: Keep 1: SET bits
12	**GPIO44**	GPIO44_PUPD	**Bitwise SET operation of GPIO44 PUPD** 0: Keep 1: SET bits
11	**GPIO43**	GPIO43_PUPD	**Bitwise SET operation of GPIO43 PUPD** 0: Keep 1: SET bits
10	**GPIO42**	GPIO42_PUPD	**Bitwise SET operation of GPIO42 PUPD** 0: Keep 1: SET bits
9	**GPIO41**	GPIO41_PUPD	**Bitwise SET operation of GPIO41 PUPD** 0: Keep 1: SET bits
8	**GPIO40**	GPIO40_PUPD	**Bitwise SET operation of GPIO40 PUPD** 0: Keep 1: SET bits
7	**GPIO39**	GPIO39_PUPD	**Bitwise SET operation of GPIO39 PUPD** 0: Keep 1: SET bits
6	**GPIO38**	GPIO38_PUPD	**Bitwise SET operation of GPIO38 PUPD** 0: Keep 1: SET bits
5	**GPIO37**	GPIO37_PUPD	**Bitwise SET operation of GPIO37 PUPD** 0: Keep 1: SET bits
4	**GPIO36**	GPIO36_PUPD	**Bitwise SET operation of GPIO36 PUPD** 0: Keep 1: SET bits
3	**GPIO35**	GPIO35_PUPD	**Bitwise SET operation of GPIO35 PUPD** 0: Keep 1: SET bits
2	**GPIO34**	GPIO34_PUPD	**Bitwise SET operation of GPIO34 PUPD** 0: Keep 1: SET bits
1	**GPIO33**	GPIO33_PUPD	**Bitwise SET operation of GPIO33 PUPD** 0: Keep 1: SET bits
0	**GPIO32**	GPIO32_PUPD	**Bitwise SET operation of GPIO32 PUPD** 0: Keep 1: SET bits

A2020A18 **GPIO_PUPD1_CLR** **GPIO PUPD Control** **00000000**

Bit	31	30	29	28	27	26	25	24	23	22	21	20	19	18	17	16
Name																GPIO 48
Type																WO
Reset																0
Bit	15	14	13	12	11	10	9	8	7	6	5	4	3	2	1	0
Name	GPIO 47	GPIO 46	GPIO 45	GPIO 44	GPIO 43	GPIO 42	GPIO 41	GPIO 40	GPIO 39	GPIO 38	GPIO 37	GPIO 36	GPIO 35	GPIO 34	GPIO 33	GPIO 32
Type	WO	WO	WO	WO	WO	WO	WO	WO	WO	WO	WO	WO	WO	WO	WO	WO

© 2015 - 2017 MediaTek Inc.

This document contains information that is proprietary to MediaTek Inc. ("MediaTek") and/or its licensor(s).
Any unauthorized use, reproduction or disclosure of this document in whole or in part is strictly prohibited.

Reset	0	0	0	0	0	0	0	0	0	0	0	0	0	0	0	0

Overview For bitwise access of GPIO_PUPD1

Bit(s)	Mnemonic	Name	Description
16	**GPIO48**	GPIO48_PUPD	**Bitwise CLR operation of GPIO48 PUPD** 0: Keep 1: CLR bits
15	**GPIO47**	GPIO47_PUPD	**Bitwise CLR operation of GPIO47 PUPD** 0: Keep 1: CLR bits
14	**GPIO46**	GPIO46_PUPD	**Bitwise CLR operation of GPIO46 PUPD** 0: Keep 1: CLR bits
13	**GPIO45**	GPIO45_PUPD	**Bitwise CLR operation of GPIO45 PUPD** 0: Keep 1: CLR bits
12	**GPIO44**	GPIO44_PUPD	**Bitwise CLR operation of GPIO44 PUPD** 0: Keep 1: CLR bits
11	**GPIO43**	GPIO43_PUPD	**Bitwise CLR operation of GPIO43 PUPD** 0: Keep 1: CLR bits
10	**GPIO42**	GPIO42_PUPD	**Bitwise CLR operation of GPIO42 PUPD** 0: Keep 1: CLR bits
9	**GPIO41**	GPIO41_PUPD	**Bitwise CLR operation of GPIO41 PUPD** 0: Keep 1: CLR bits
8	**GPIO40**	GPIO40_PUPD	**Bitwise CLR operation of GPIO40 PUPD** 0: Keep 1: CLR bits
7	**GPIO39**	GPIO39_PUPD	**Bitwise CLR operation of GPIO39 PUPD** 0: Keep 1: CLR bits
6	**GPIO38**	GPIO38_PUPD	**Bitwise CLR operation of GPIO38 PUPD** 0: Keep 1: CLR bits
5	**GPIO37**	GPIO37_PUPD	**Bitwise CLR operation of GPIO37 PUPD** 0: Keep 1: CLR bits
4	**GPIO36**	GPIO36_PUPD	**Bitwise CLR operation of GPIO36 PUPD** 0: Keep 1: CLR bits
3	**GPIO35**	GPIO35_PUPD	**Bitwise CLR operation of GPIO35 PUPD** 0: Keep 1: CLR bits
2	**GPIO34**	GPIO34_PUPD	**Bitwise CLR operation of GPIO34 PUPD** 0: Keep 1: CLR bits
1	**GPIO33**	GPIO33_PUPD	**Bitwise CLR operation of GPIO33 PUPD** 0: Keep 1: CLR bits
0	**GPIO32**	GPIO32_PUPD	**Bitwise CLR operation of GPIO32 PUPD** 0: Keep

© 2015 - 2017 MediaTek Inc.

This document contains information that is proprietary to MediaTek Inc. ("MediaTek") and/or its licensor(s).
Any unauthorized use, reproduction or disclosure of this document in whole or in part is strictly prohibited.

Bit(s)	Mnemonic	Name	Description
			1: CLR bits

A2020B00 **GPIO_RESEN0_0** **GPIO R0 Control** **FDFDFBF0**

Bit	31	30	29	28	27	26	25	24	23	22	21	20	19	18	17	16
Name	GPIO31	GPIO30	GPIO29	GPIO28	GPIO27	GPIO26	GPIO25	GPIO24	GPIO23	GPIO22	GPIO21	GPIO20	GPIO19	GPIO18	GPIO17	GPIO16
Type	RW	RW	RW	RW	RW	RW	RW	RW	RW	RW	RW	RW	RW	RW	RW	RW
Reset	1	1	1	1	1	1	0	1	1	1	1	1	1	1	0	1
Bit	15	14	13	12	11	10	9	8	7	6	5	4	3	2	1	0
Name	GPIO15	GPIO14	GPIO13	GPIO12	GPIO11		GPIO9	GPIO8	GPIO7	GPIO6	GPIO5	GPIO4				
Type	RW	RW	RW	RW	RW		RW	RW	RW	RW	RW	RW				
Reset	1	1	1	1	1		1	1	1	1	1	1				

Overview Configures GPIO R0 control

Bit(s)	Mnemonic	Name	Description
31	**GPIO31**	GPIO31_R0	**R0 for GPIO31** 0: Disable 1: Enable
30	**GPIO30**	GPIO30_R0	**R0 for GPIO30** 0: Disable 1: Enable
29	**GPIO29**	GPIO29_R0	**R0 for GPIO29** 0: Disable 1: Enable
28	**GPIO28**	GPIO28_R0	**R0 for GPIO28** 0: Disable 1: Enable
27	**GPIO27**	GPIO27_R0	**R0 for GPIO27** 0: Disable 1: Enable
26	**GPIO26**	GPIO26_R0	**R0 for GPIO26** 0: Disable 1: Enable
25	**GPIO25**	GPIO25_R0	**R0 for GPIO25** 0: Disable 1: Enable
24	**GPIO24**	GPIO24_R0	**R0 for GPIO24** 0: Disable 1: Enable
23	**GPIO23**	GPIO23_R0	**R0 for GPIO23** 0: Disable 1: Enable
22	**GPIO22**	GPIO22_R0	**R0 for GPIO22** 0: Disable 1: Enable
21	**GPIO21**	GPIO21_R0	**R0 for GPIO21** 0: Disable 1: Enable
20	**GPIO20**	GPIO20_R0	**R0 for GPIO20** 0: Disable 1: Enable

© 2015 - 2017 MediaTek Inc.

This document contains information that is proprietary to MediaTek Inc. ("MediaTek") and/or its licensor(s).
Any unauthorized use, reproduction or disclosure of this document in whole or in part is strictly prohibited.

Bit(s)	Mnemonic	Name	Description
19	**GPIO19**	GPIO19_R0	**R0 for GPIO19** 0: Disable 1: Enable
18	**GPIO18**	GPIO18_R0	**R0 for GPIO18** 0: Disable 1: Enable
17	**GPIO17**	GPIO17_R0	**R0 for GPIO17** 0: Disable 1: Enable
16	**GPIO16**	GPIO16_R0	**R0 for GPIO16** 0: Disable 1: Enable
15	**GPIO15**	GPIO15_R0	**R0 for GPIO15** 0: Disable 1: Enable
14	**GPIO14**	GPIO14_R0	**R0 for GPIO14** 0: Disable 1: Enable
13	**GPIO13**	GPIO13_R0	**R0 for GPIO13** 0: Disable 1: Enable
12	**GPIO12**	GPIO12_R0	**R0 for GPIO12** 0: Disable 1: Enable
11	**GPIO11**	GPIO11_R0	**R0 for GPIO11** 0: Disable 1: Enable
9	**GPIO9**	GPIO9_R0	**R0 for GPIO9** 0: Disable 1: Enable
8	**GPIO8**	GPIO8_R0	**R0 for GPIO8** 0: Disable 1: Enable
7	**GPIO7**	GPIO7_R0	**R0 for GPIO7** 0: Disable 1: Enable
6	**GPIO6**	GPIO6_R0	**R0 for GPIO6** 0: Disable 1: Enable
5	**GPIO5**	GPIO5_R0	**R0 for GPIO5** 0: Disable 1: Enable
4	**GPIO4**	GPIO4_R0	**R0 for GPIO4** 0: Disable 1: Enable

A2020B04 **GPIO_RESEN0_0_SET** **GPIO R0 Control** **00000000**

Bit	31	30	29	28	27	26	25	24	23	22	21	20	19	18	17	16
Name	**GPIO31**	**GPIO30**	**GPIO29**	**GPIO28**	**GPIO27**	**GPIO26**	**GPIO25**	**GPIO24**	**GPIO23**	**GPIO22**	**GPIO21**	**GPIO20**	**GPIO19**	**GPIO18**	**GPIO17**	**GPIO16**
Type	WO	WO	WO	WO	WO	WO	WO	WO	WO	WO	WO	WO	WO	WO	WO	WO
Reset	0	0	0	0	0	0	0	0	0	0	0	0	0	0	0	0

© 2015 - 2017 MediaTek Inc.

This document contains information that is proprietary to MediaTek Inc. (“MediaTek”) and/or its licensor(s).
Any unauthorized use, reproduction or disclosure of this document in whole or in part is strictly prohibited.

Bit	15	14	13	12	11	10	9	8	7	6	5	4	3	2	1	0
Name	GPIO15	GPIO14	GPIO13	GPIO12	GPIO11		GPIO9	GPIO8	GPIO7	GPIO6	GPIO5	GPIO4				
Type	WO	WO	WO	WO	WO		WO	WO	WO	WO	WO	WO				
Reset	0	0	0	0	0		0	0	0	0	0	0				

Overview For bitwise access of GPIO_RESEN0_0

Bit(s)	Mnemonic	Name	Description
31	**GPIO31**	GPIO31_R0	**Bitwise SET operation of GPIO31 R0** 0: Keep 1: SET bits
30	**GPIO30**	GPIO30_R0	**Bitwise SET operation of GPIO30 R0** 0: Keep 1: SET bits
29	**GPIO29**	GPIO29_R0	**Bitwise SET operation of GPIO29 R0** 0: Keep 1: SET bits
28	**GPIO28**	GPIO28_R0	**Bitwise SET operation of GPIO28 R0** 0: Keep 1: SET bits
27	**GPIO27**	GPIO27_R0	**Bitwise SET operation of GPIO27 R0** 0: Keep 1: SET bits
26	**GPIO26**	GPIO26_R0	**Bitwise SET operation of GPIO26 R0** 0: Keep 1: SET bits
25	**GPIO25**	GPIO25_R0	**Bitwise SET operation of GPIO25 R0** 0: Keep 1: SET bits
24	**GPIO24**	GPIO24_R0	**Bitwise SET operation of GPIO24 R0** 0: Keep 1: SET bits
23	**GPIO23**	GPIO23_R0	**Bitwise SET operation of GPIO23 R0** 0: Keep 1: SET bits
22	**GPIO22**	GPIO22_R0	**Bitwise SET operation of GPIO22 R0** 0: Keep 1: SET bits
21	**GPIO21**	GPIO21_R0	**Bitwise SET operation of GPIO21 R0** 0: Keep 1: SET bits
20	**GPIO20**	GPIO20_R0	**Bitwise SET operation of GPIO20 R0** 0: Keep 1: SET bits
19	**GPIO19**	GPIO19_R0	**Bitwise SET operation of GPIO19 R0** 0: Keep 1: SET bits
18	**GPIO18**	GPIO18_R0	**Bitwise SET operation of GPIO18 R0** 0: Keep 1: SET bits
17	**GPIO17**	GPIO17_R0	**Bitwise SET operation of GPIO17 R0** 0: Keep 1: SET bits
16	**GPIO16**	GPIO16_R0	**Bitwise SET operation of GPIO16 R0** 0: Keep

© 2015 - 2017 MediaTek Inc.

This document contains information that is proprietary to MediaTek Inc. ("MediaTek") and/or its licensor(s).
Any unauthorized use, reproduction or disclosure of this document in whole or in part is strictly prohibited.

Bit(s)	Mnemonic	Name	Description
			1: SET bits
15	**GPIO15**	GPIO15_R0	**Bitwise SET operation of GPIO15 R0** 0: Keep 1: SET bits
14	**GPIO14**	GPIO14_R0	**Bitwise SET operation of GPIO14 R0** 0: Keep 1: SET bits
13	**GPIO13**	GPIO13_R0	**Bitwise SET operation of GPIO13 R0** 0: Keep 1: SET bits
12	**GPIO12**	GPIO12_R0	**Bitwise SET operation of GPIO12 R0** 0: Keep 1: SET bits
11	**GPIO11**	GPIO11_R0	**Bitwise SET operation of GPIO11 R0** 0: Keep 1: SET bits
9	**GPIO9**	GPIO9_R0	**Bitwise SET operation of GPIO9 R0** 0: Keep 1: SET bits
8	**GPIO8**	GPIO8_R0	**Bitwise SET operation of GPIO8 R0** 0: Keep 1: SET bits
7	**GPIO7**	GPIO7_R0	**Bitwise SET operation of GPIO7 R0** 0: Keep 1: SET bits
6	**GPIO6**	GPIO6_R0	**Bitwise SET operation of GPIO6 R0** 0: Keep 1: SET bits
5	**GPIO5**	GPIO5_R0	**Bitwise SET operation of GPIO5 R0** 0: Keep 1: SET bits
4	**GPIO4**	GPIO4_R0	**Bitwise SET operation of GPIO4 R0** 0: Keep 1: SET bits

A2020B08 GPIO_RESEN0_0_CLR GPIO R0 Control 00000000

Bit	31	30	29	28	27	26	25	24	23	22	21	20	19	18	17	16
Name	**GPIO31**	**GPIO30**	**GPIO29**	**GPIO28**	**GPIO27**	**GPIO26**	**GPIO25**	**GPIO24**	**GPIO23**	**GPIO22**	**GPIO21**	**GPIO20**	**GPIO19**	**GPIO18**	**GPIO17**	**GPIO16**
Type	WO	WO	WO	WO	WO	WO	WO	WO	WO	WO	WO	WO	WO	WO	WO	WO
Reset	0	0	0	0	0	0	0	0	0	0	0	0	0	0	0	0
Bit	15	14	13	12	11	10	9	8	7	6	5	4	3	2	1	0
Name	**GPIO15**	**GPIO14**	**GPIO13**	**GPIO12**	**GPIO11**		**GPIO9**	**GPIO8**	**GPIO7**	**GPIO6**	**GPIO5**	**GPIO4**				
Type	WO	WO	WO	WO	WO		WO	WO	WO	WO	WO	WO				
Reset	0	0	0	0	0		0	0	0	0	0	0				

Overview For bitwise access of GPIO_RESEN0_0

Bit(s)	Mnemonic	Name	Description
31	**GPIO31**	GPIO31_R0	**Bitwise CLR operation of GPIO31 R0** 0: Keep 1: CLR bits

© 2015 - 2017 MediaTek Inc.
This document contains information that is proprietary to MediaTek Inc. ("MediaTek") and/or its licensor(s).
Any unauthorized use, reproduction or disclosure of this document in whole or in part is strictly prohibited.

Bit(s)	Mnemonic	Name	Description
30	**GPIO30**	GPIO30_R0	**Bitwise CLR operation of GPIO30 R0** 0: Keep 1: CLR bits
29	**GPIO29**	GPIO29_R0	**Bitwise CLR operation of GPIO29 R0** 0: Keep 1: CLR bits
28	**GPIO28**	GPIO28_R0	**Bitwise CLR operation of GPIO28 R0** 0: Keep 1: CLR bits
27	**GPIO27**	GPIO27_R0	**Bitwise CLR operation of GPIO27 R0** 0: Keep 1: CLR bits
26	**GPIO26**	GPIO26_R0	**Bitwise CLR operation of GPIO26 R0** 0: Keep 1: CLR bits
25	**GPIO25**	GPIO25_R0	**Bitwise CLR operation of GPIO25 R0** 0: Keep 1: CLR bits
24	**GPIO24**	GPIO24_R0	**Bitwise CLR operation of GPIO24 R0** 0: Keep 1: CLR bits
23	**GPIO23**	GPIO23_R0	**Bitwise CLR operation of GPIO23 R0** 0: Keep 1: CLR bits
22	**GPIO22**	GPIO22_R0	**Bitwise CLR operation of GPIO22 R0** 0: Keep 1: CLR bits
21	**GPIO21**	GPIO21_R0	**Bitwise CLR operation of GPIO21 R0** 0: Keep 1: CLR bits
20	**GPIO20**	GPIO20_R0	**Bitwise CLR operation of GPIO20 R0** 0: Keep 1: CLR bits
19	**GPIO19**	GPIO19_R0	**Bitwise CLR operation of GPIO19 R0** 0: Keep 1: CLR bits
18	**GPIO18**	GPIO18_R0	**Bitwise CLR operation of GPIO18 R0** 0: Keep 1: CLR bits
17	**GPIO17**	GPIO17_R0	**Bitwise CLR operation of GPIO17 R0** 0: Keep 1: CLR bits
16	**GPIO16**	GPIO16_R0	**Bitwise CLR operation of GPIO16 R0** 0: Keep 1: CLR bits
15	**GPIO15**	GPIO15_R0	**Bitwise CLR operation of GPIO15 R0** 0: Keep 1: CLR bits
14	**GPIO14**	GPIO14_R0	**Bitwise CLR operation of GPIO14 R0** 0: Keep 1: CLR bits
13	**GPIO13**	GPIO13_R0	**Bitwise CLR operation of GPIO13 R0** 0: Keep 1: CLR bits

© 2015 - 2017 MediaTek Inc.

This document contains information that is proprietary to MediaTek Inc. (“MediaTek”) and/or its licensor(s).
Any unauthorized use, reproduction or disclosure of this document in whole or in part is strictly prohibited.

Bit(s)	Mnemonic	Name	Description
12	**GPIO12**	GPIO12_R0	**Bitwise CLR operation of GPIO12 R0** 0: Keep 1: CLR bits
11	**GPIO11**	GPIO11_R0	**Bitwise CLR operation of GPIO11 R0** 0: Keep 1: CLR bits
9	**GPIO9**	GPIO9_R0	**Bitwise CLR operation of GPIO9 R0** 0: Keep 1: CLR bits
8	**GPIO8**	GPIO8_R0	**Bitwise CLR operation of GPIO8 R0** 0: Keep 1: CLR bits
7	**GPIO7**	GPIO7_R0	**Bitwise CLR operation of GPIO7 R0** 0: Keep 1: CLR bits
6	**GPIO6**	GPIO6_R0	**Bitwise CLR operation of GPIO6 R0** 0: Keep 1: CLR bits
5	**GPIO5**	GPIO5_R0	**Bitwise CLR operation of GPIO5 R0** 0: Keep 1: CLR bits
4	**GPIO4**	GPIO4_R0	**Bitwise CLR operation of GPIO4 R0** 0: Keep 1: CLR bits

A2020B10 **GPIO_RESEN0_1** **GPIO R0 Control** **0001FF77**

Bit	31	30	29	28	27	26	25	24	23	22	21	20	19	18	17	16
Name																**GPIO48**
Type																RW
Reset																1
Bit	15	14	13	12	11	10	9	8	7	6	5	4	3	2	1	0
Name	**GPIO47**	**GPIO46**	**GPIO45**	**GPIO44**	**GPIO43**	**GPIO42**	**GPIO41**	**GPIO40**	**GPIO39**	**GPIO38**	**GPIO37**	**GPIO36**	**GPIO35**	**GPIO34**	**GPIO33**	**GPIO32**
Type	RW	RW	RW	RW	RW	RW	RW	RW	RW	RW	RW	RW	RW	RW	RW	RW
Reset	1	1	1	1	1	1	1	1	0	1	1	1	0	1	1	1

Overview Configures GPIO R0 control

Bit(s)	Mnemonic	Name	Description
16	**GPIO48**	GPIO48_R0	**R0 for GPIO48** 0: Disable 1: Enable
15	**GPIO47**	GPIO47_R0	**R0 for GPIO47** 0: Disable 1: Enable
14	**GPIO46**	GPIO46_R0	**R0 for GPIO46** 0: Disable 1: Enable
13	**GPIO45**	GPIO45_R0	**R0 for GPIO45** 0: Disable 1: Enable

© 2015 - 2017 MediaTek Inc.

This document contains information that is proprietary to MediaTek Inc. ("MediaTek") and/or its licensor(s).
Any unauthorized use, reproduction or disclosure of this document in whole or in part is strictly prohibited.

Bit(s)	Mnemonic	Name	Description
12	**GPIO44**	GPIO44_R0	**R0 for GPIO44** 0: Disable 1: Enable
11	**GPIO43**	GPIO43_R0	**R0 for GPIO43** 0: Disable 1: Enable
10	**GPIO42**	GPIO42_R0	**R0 for GPIO42** 0: Disable 1: Enable
9	**GPIO41**	GPIO41_R0	**R0 for GPIO41** 0: Disable 1: Enable
8	**GPIO40**	GPIO40_R0	**R0 for GPIO40** 0: Disable 1: Enable
7	**GPIO39**	GPIO39_R0	**R0 for GPIO39** 0: Disable 1: Enable
6	**GPIO38**	GPIO38_R0	**R0 for GPIO38** 0: Disable 1: Enable
5	**GPIO37**	GPIO37_R0	**R0 for GPIO37** 0: Disable 1: Enable
4	**GPIO36**	GPIO36_R0	**R0 for GPIO36** 0: Disable 1: Enable
3	**GPIO35**	GPIO35_R0	**R0 for GPIO35** 0: Disable 1: Enable
2	**GPIO34**	GPIO34_R0	**R0 for GPIO34** 0: Disable 1: Enable
1	**GPIO33**	GPIO33_R0	**R0 for GPIO33** 0: Disable 1: Enable
0	**GPIO32**	GPIO32_R0	**R0 for GPIO32** 0: Disable 1: Enable

A2020B14 **GPIO_RESEN0_1_SET** **GPIO R0 Control** **00000000**

Bit	31	30	29	28	27	26	25	24	23	22	21	20	19	18	17	16
Name																GPIO 48
Type																WO
Reset																0
Bit	15	14	13	12	11	10	9	8	7	6	5	4	3	2	1	0
Name	GPIO 47	GPIO 46	GPIO 45	GPIO 44	GPIO 43	GPIO 42	GPIO 41	GPIO 40	GPIO 39	GPIO 38	GPIO 37	GPIO 36	GPIO 35	GPIO 34	GPIO 33	GPIO 32
Type	WO	WO	WO	WO	WO	WO	WO	WO	WO	WO	WO	WO	WO	WO	WO	WO
Reset	0	0	0	0	0	0	0	0	0	0	0	0	0	0	0	0

Overview For bitwise access of GPIO_RESEN0_1

© 2015 - 2017 MediaTek Inc.

This document contains information that is proprietary to MediaTek Inc. ("MediaTek") and/or its licensor(s).
Any unauthorized use, reproduction or disclosure of this document in whole or in part is strictly prohibited.

Bit(s)	Mnemonic	Name	Description
16	**GPIO48**	GPIO48_R0	**Bitwise SET operation of GPIO48 R0** 0: Keep 1: SET bits
15	**GPIO47**	GPIO47_R0	**Bitwise SET operation of GPIO47 R0** 0: Keep 1: SET bits
14	**GPIO46**	GPIO46_R0	**Bitwise SET operation of GPIO46 R0** 0: Keep 1: SET bits
13	**GPIO45**	GPIO45_R0	**Bitwise SET operation of GPIO45 R0** 0: Keep 1: SET bits
12	**GPIO44**	GPIO44_R0	**Bitwise SET operation of GPIO44 R0** 0: Keep 1: SET bits
11	**GPIO43**	GPIO43_R0	**Bitwise SET operation of GPIO43 R0** 0: Keep 1: SET bits
10	**GPIO42**	GPIO42_R0	**Bitwise SET operation of GPIO42 R0** 0: Keep 1: SET bits
9	**GPIO41**	GPIO41_R0	**Bitwise SET operation of GPIO41 R0** 0: Keep 1: SET bits
8	**GPIO40**	GPIO40_R0	**Bitwise SET operation of GPIO40 R0** 0: Keep 1: SET bits
7	**GPIO39**	GPIO39_R0	**Bitwise SET operation of GPIO39 R0** 0: Keep 1: SET bits
6	**GPIO38**	GPIO38_R0	**Bitwise SET operation of GPIO38 R0** 0: Keep 1: SET bits
5	**GPIO37**	GPIO37_R0	**Bitwise SET operation of GPIO37 R0** 0: Keep 1: SET bits
4	**GPIO36**	GPIO36_R0	**Bitwise SET operation of GPIO36 R0** 0: Keep 1: SET bits
3	**GPIO35**	GPIO35_R0	**Bitwise SET operation of GPIO35 R0** 0: Keep 1: SET bits
2	**GPIO34**	GPIO34_R0	**Bitwise SET operation of GPIO34 R0** 0: Keep 1: SET bits
1	**GPIO33**	GPIO33_R0	**Bitwise SET operation of GPIO33 R0** 0: Keep 1: SET bits
0	**GPIO32**	GPIO32_R0	**Bitwise SET operation of GPIO32 R0** 0: Keep 1: SET bits

© 2015 - 2017 MediaTek Inc.

This document contains information that is proprietary to MediaTek Inc. (“MediaTek”) and/or its licensor(s).
Any unauthorized use, reproduction or disclosure of this document in whole or in part is strictly prohibited.

A2020B18 **GPIO_RESEN0_1_CLR** **GPIO R0 Control** **00000000**

Bit	31	30	29	28	27	26	25	24	23	22	21	20	19	18	17	16
Name																GPIO48
Type																WO
Reset																0
Bit	15	14	13	12	11	10	9	8	7	6	5	4	3	2	1	0
Name	GPIO47	GPIO46	GPIO45	GPIO44	GPIO43	GPIO42	GPIO41	GPIO40	GPIO39	GPIO38	GPIO37	GPIO36	GPIO35	GPIO34	GPIO33	GPIO32
Type	WO	WO	WO	WO	WO	WO	WO	WO	WO	WO	WO	WO	WO	WO	WO	WO
Reset	0	0	0	0	0	0	0	0	0	0	0	0	0	0	0	0

Overview For bitwise access of GPIO_RESEN0_1

Bit(s)	Mnemonic	Name	Description
16	**GPIO48**	GPIO48_R0	**Bitwise CLR operation of GPIO48 R0** 0: Keep 1: CLR bits
15	**GPIO47**	GPIO47_R0	**Bitwise CLR operation of GPIO47 R0** 0: Keep 1: CLR bits
14	**GPIO46**	GPIO46_R0	**Bitwise CLR operation of GPIO46 R0** 0: Keep 1: CLR bits
13	**GPIO45**	GPIO45_R0	**Bitwise CLR operation of GPIO45 R0** 0: Keep 1: CLR bits
12	**GPIO44**	GPIO44_R0	**Bitwise CLR operation of GPIO44 R0** 0: Keep 1: CLR bits
11	**GPIO43**	GPIO43_R0	**Bitwise CLR operation of GPIO43 R0** 0: Keep 1: CLR bits
10	**GPIO42**	GPIO42_R0	**Bitwise CLR operation of GPIO42 R0** 0: Keep 1: CLR bits
9	**GPIO41**	GPIO41_R0	**Bitwise CLR operation of GPIO41 R0** 0: Keep 1: CLR bits
8	**GPIO40**	GPIO40_R0	**Bitwise CLR operation of GPIO40 R0** 0: Keep 1: CLR bits
7	**GPIO39**	GPIO39_R0	**Bitwise CLR operation of GPIO39 R0** 0: Keep 1: CLR bits
6	**GPIO38**	GPIO38_R0	**Bitwise CLR operation of GPIO38 R0** 0: Keep 1: CLR bits
5	**GPIO37**	GPIO37_R0	**Bitwise CLR operation of GPIO37 R0** 0: Keep 1: CLR bits
4	**GPIO36**	GPIO36_R0	**Bitwise CLR operation of GPIO36 R0** 0: Keep 1: CLR bits
3	**GPIO35**	GPIO35_R0	**Bitwise CLR operation of GPIO35 R0**

© 2015 - 2017 MediaTek Inc.

This document contains information that is proprietary to MediaTek Inc. ("MediaTek") and/or its licensor(s).
Any unauthorized use, reproduction or disclosure of this document in whole or in part is strictly prohibited.

Bit(s)	Mnemonic	Name	Description
			0: Keep 1: CLR bits
2	**GPIO34**	GPIO34_R0	**Bitwise CLR operation of GPIO34 R0** 0: Keep 1: CLR bits
1	**GPIO33**	GPIO33_R0	**Bitwise CLR operation of GPIO33 R0** 0: Keep 1: CLR bits
0	**GPIO32**	GPIO32_R0	**Bitwise CLR operation of GPIO32 R0** 0: Keep 1: CLR bits

A2020B20 **GPIO_RESEN1_0** **GPIO R1 Control** **00000000**

Bit	31	30	29	28	27	26	25	24	23	22	21	20	19	18	17	16
Name	**GPIO31**	**GPIO30**	**GPIO29**	**GPIO28**	**GPIO27**	**GPIO26**	**GPIO25**	**GPIO24**	**GPIO23**	**GPIO22**	**GPIO21**	**GPIO20**	**GPIO19**	**GPIO18**	**GPIO17**	**GPIO16**
Type	RW	RW	RW	RW	RW	RW	RW	RW	RW	RW	RW	RW	RW	RW	RW	RW
Reset	0	0	0	0	0	0	0	0	0	0	0	0	0	0	0	0
Bit	15	14	13	12	11	10	9	8	7	6	5	4	3	2	1	0
Name	**GPIO15**	**GPIO14**	**GPIO13**	**GPIO12**	**GPIO11**		**GPIO9**	**GPIO8**	**GPIO7**	**GPIO6**	**GPIO5**	**GPIO4**				
Type	RW	RW	RW	RW	RW		RW	RW	RW	RW	RW	RW				
Reset	0	0	0	0	0		0	0	0	0	0	0				

Overview Configures GPIO R1 control

Bit(s)	Mnemonic	Name	Description
31	**GPIO31**	GPIO31_R1	**R1 for GPIO31** 0: Disable 1: Enable
30	**GPIO30**	GPIO30_R1	**R1 for GPIO30** 0: Disable 1: Enable
29	**GPIO29**	GPIO29_R1	**R1 for GPIO29** 0: Disable 1: Enable
28	**GPIO28**	GPIO28_R1	**R1 for GPIO28** 0: Disable 1: Enable
27	**GPIO27**	GPIO27_R1	**R1 for GPIO27** 0: Disable 1: Enable
26	**GPIO26**	GPIO26_R1	**R1 for GPIO26** 0: Disable 1: Enable
25	**GPIO25**	GPIO25_R1	**R1 for GPIO25** 0: Disable 1: Enable
24	**GPIO24**	GPIO24_R1	**R1 for GPIO24** 0: Disable 1: Enable
23	**GPIO23**	GPIO23_R1	**R1 for GPIO23** 0: Disable

© 2015 - 2017 MediaTek Inc.

This document contains information that is proprietary to MediaTek Inc. (“MediaTek”) and/or its licensor(s).
Any unauthorized use, reproduction or disclosure of this document in whole or in part is strictly prohibited.

Bit(s)	Mnemonic	Name	Description
			1: Enable
22	**GPIO22**	GPIO22_R1	**R1 for GPIO22** 0: Disable 1: Enable
21	**GPIO21**	GPIO21_R1	**R1 for GPIO21** 0: Disable 1: Enable
20	**GPIO20**	GPIO20_R1	**R1 for GPIO20** 0: Disable 1: Enable
19	**GPIO19**	GPIO19_R1	**R1 for GPIO19** 0: Disable 1: Enable
18	**GPIO18**	GPIO18_R1	**R1 for GPIO18** 0: Disable 1: Enable
17	**GPIO17**	GPIO17_R1	**R1 for GPIO17** 0: Disable 1: Enable
16	**GPIO16**	GPIO16_R1	**R1 for GPIO16** 0: Disable 1: Enable
15	**GPIO15**	GPIO15_R1	**R1 for GPIO15** 0: Disable 1: Enable
14	**GPIO14**	GPIO14_R1	**R1 for GPIO14** 0: Disable 1: Enable
13	**GPIO13**	GPIO13_R1	**R1 for GPIO13** 0: Disable 1: Enable
12	**GPIO12**	GPIO12_R1	**R1 for GPIO12** 0: Disable 1: Enable
11	**GPIO11**	GPIO11_R1	**R1 for GPIO11** 0: Disable 1: Enable
9	**GPIO9**	GPIO9_R1	**R1 for GPIO9** 0: Disable 1: Enable
8	**GPIO8**	GPIO8_R1	**R1 for GPIO8** 0: Disable 1: Enable
7	**GPIO7**	GPIO7_R1	**R1 for GPIO7** 0: Disable 1: Enable
6	**GPIO6**	GPIO6_R1	**R1 for GPIO6** 0: Disable 1: Enable
5	**GPIO5**	GPIO5_R1	**R1 for GPIO5** 0: Disable 1: Enable
4	**GPIO4**	GPIO4_R1	**R1 for GPIO4** 0: Disable

© 2015 - 2017 MediaTek Inc.

This document contains information that is proprietary to MediaTek Inc. (“MediaTek”) and/or its licensor(s).
Any unauthorized use, reproduction or disclosure of this document in whole or in part is strictly prohibited.

Bit(s)	Mnemonic	Name	Description
			1: Enable

A2020B24 **GPIO_RESEN1_0_SET** **GPIO R1 Control** **00000000**

Bit	31	30	29	28	27	26	25	24	23	22	21	20	19	18	17	16
Name	GPIO31	GPIO30	GPIO29	GPIO28	GPIO27	GPIO26	GPIO25	GPIO24	GPIO23	GPIO22	GPIO21	GPIO20	GPIO19	GPIO18	GPIO17	GPIO16
Type	WO	WO	WO	WO	WO	WO	WO	WO	WO	WO	WO	WO	WO	WO	WO	WO
Reset	0	0	0	0	0	0	0	0	0	0	0	0	0	0	0	0
Bit	15	14	13	12	11	10	9	8	7	6	5	4	3	2	1	0
Name	GPIO15	GPIO14	GPIO13	GPIO12	GPIO11		GPIO9	GPIO8	GPIO7	GPIO6	GPIO5	GPIO4				
Type	WO	WO	WO	WO	WO		WO	WO	WO	WO	WO	WO				
Reset	0	0	0	0	0		0	0	0	0	0	0				

Overview For bitwise access of GPIO_RESEN1_0

Bit(s)	Mnemonic	Name	Description
31	**GPIO31**	GPIO31_R1	**Bitwise SET operation of GPIO31 R1** 0: Keep 1: SET bits
30	**GPIO30**	GPIO30_R1	**Bitwise SET operation of GPIO30 R1** 0: Keep 1: SET bits
29	**GPIO29**	GPIO29_R1	**Bitwise SET operation of GPIO29 R1** 0: Keep 1: SET bits
28	**GPIO28**	GPIO28_R1	**Bitwise SET operation of GPIO28 R1** 0: Keep 1: SET bits
27	**GPIO27**	GPIO27_R1	**Bitwise SET operation of GPIO27 R1** 0: Keep 1: SET bits
26	**GPIO26**	GPIO26_R1	**Bitwise SET operation of GPIO26 R1** 0: Keep 1: SET bits
25	**GPIO25**	GPIO25_R1	**Bitwise SET operation of GPIO25 R1** 0: Keep 1: SET bits
24	**GPIO24**	GPIO24_R1	**Bitwise SET operation of GPIO24 R1** 0: Keep 1: SET bits
23	**GPIO23**	GPIO23_R1	**Bitwise SET operation of GPIO23 R1** 0: Keep 1: SET bits
22	**GPIO22**	GPIO22_R1	**Bitwise SET operation of GPIO22 R1** 0: Keep 1: SET bits
21	**GPIO21**	GPIO21_R1	**Bitwise SET operation of GPIO21 R1** 0: Keep 1: SET bits
20	**GPIO20**	GPIO20_R1	**Bitwise SET operation of GPIO20 R1** 0: Keep 1: SET bits

© 2015 - 2017 MediaTek Inc.

This document contains information that is proprietary to MediaTek Inc. ("MediaTek") and/or its licensor(s).
Any unauthorized use, reproduction or disclosure of this document in whole or in part is strictly prohibited.

Bit(s)	Mnemonic	Name	Description
19	**GPIO19**	GPIO19_R1	**Bitwise SET operation of GPIO19 R1** 0: Keep 1: SET bits
18	**GPIO18**	GPIO18_R1	**Bitwise SET operation of GPIO18 R1** 0: Keep 1: SET bits
17	**GPIO17**	GPIO17_R1	**Bitwise SET operation of GPIO17 R1** 0: Keep 1: SET bits
16	**GPIO16**	GPIO16_R1	**Bitwise SET operation of GPIO16 R1** 0: Keep 1: SET bits
15	**GPIO15**	GPIO15_R1	**Bitwise SET operation of GPIO15 R1** 0: Keep 1: SET bits
14	**GPIO14**	GPIO14_R1	**Bitwise SET operation of GPIO14 R1** 0: Keep 1: SET bits
13	**GPIO13**	GPIO13_R1	**Bitwise SET operation of GPIO13 R1** 0: Keep 1: SET bits
12	**GPIO12**	GPIO12_R1	**Bitwise SET operation of GPIO12 R1** 0: Keep 1: SET bits
11	**GPIO11**	GPIO11_R1	**Bitwise SET operation of GPIO11 R1** 0: Keep 1: SET bits
9	**GPIO9**	GPIO9_R1	**Bitwise SET operation of GPIO9 R1** 0: Keep 1: SET bits
8	**GPIO8**	GPIO8_R1	**Bitwise SET operation of GPIO8 R1** 0: Keep 1: SET bits
7	**GPIO7**	GPIO7_R1	**Bitwise SET operation of GPIO7 R1** 0: Keep 1: SET bits
6	**GPIO6**	GPIO6_R1	**Bitwise SET operation of GPIO6 R1** 0: Keep 1: SET bits
5	**GPIO5**	GPIO5_R1	**Bitwise SET operation of GPIO5 R1** 0: Keep 1: SET bits
4	**GPIO4**	GPIO4_R1	**Bitwise SET operation of GPIO4 R1** 0: Keep 1: SET bits

A2020B28 **GPIO_RESEN1_0_CLR** **GPIO R1 Control** **00000000**

Bit	31	30	29	28	27	26	25	24	23	22	21	20	19	18	17	16
Name	GPIO31	GPIO30	GPIO29	GPIO28	GPIO27	GPIO26	GPIO25	GPIO24	GPIO23	GPIO22	GPIO21	GPIO20	GPIO19	GPIO18	GPIO17	GPIO16
Type	WO	WO	WO	WO	WO	WO	WO	WO	WO	WO	WO	WO	WO	WO	WO	WO
Reset	0	0	0	0	0	0	0	0	0	0	0	0	0	0	0	0

© 2015 - 2017 MediaTek Inc.

This document contains information that is proprietary to MediaTek Inc. ("MediaTek") and/or its licensor(s).
Any unauthorized use, reproduction or disclosure of this document in whole or in part is strictly prohibited.

Bit	15	14	13	12	11	10	9	8	7	6	5	4	3	2	1	0
Name	GPIO15	GPIO14	GPIO13	GPIO12	GPIO11		GPIO9	GPIO8	GPIO7	GPIO6	GPIO5	GPIO4				
Type	WO	WO	WO	WO	WO		WO	WO	WO	WO	WO	WO				
Reset	0	0	0	0	0		0	0	0	0	0	0				

Overview For bitwise access of GPIO_RESEN1_0

Bit(s)	Mnemonic	Name	Description
31	**GPIO31**	GPIO31_R1	**Bitwise CLR operation of GPIO31 R1** 0: Keep 1: CLR bits
30	**GPIO30**	GPIO30_R1	**Bitwise CLR operation of GPIO30 R1** 0: Keep 1: CLR bits
29	**GPIO29**	GPIO29_R1	**Bitwise CLR operation of GPIO29 R1** 0: Keep 1: CLR bits
28	**GPIO28**	GPIO28_R1	**Bitwise CLR operation of GPIO28 R1** 0: Keep 1: CLR bits
27	**GPIO27**	GPIO27_R1	**Bitwise CLR operation of GPIO27 R1** 0: Keep 1: CLR bits
26	**GPIO26**	GPIO26_R1	**Bitwise CLR operation of GPIO26 R1** 0: Keep 1: CLR bits
25	**GPIO25**	GPIO25_R1	**Bitwise CLR operation of GPIO25 R1** 0: Keep 1: CLR bits
24	**GPIO24**	GPIO24_R1	**Bitwise CLR operation of GPIO24 R1** 0: Keep 1: CLR bits
23	**GPIO23**	GPIO23_R1	**Bitwise CLR operation of GPIO23 R1** 0: Keep 1: CLR bits
22	**GPIO22**	GPIO22_R1	**Bitwise CLR operation of GPIO22 R1** 0: Keep 1: CLR bits
21	**GPIO21**	GPIO21_R1	**Bitwise CLR operation of GPIO21 R1** 0: Keep 1: CLR bits
20	**GPIO20**	GPIO20_R1	**Bitwise CLR operation of GPIO20 R1** 0: Keep 1: CLR bits
19	**GPIO19**	GPIO19_R1	**Bitwise CLR operation of GPIO19 R1** 0: Keep 1: CLR bits
18	**GPIO18**	GPIO18_R1	**Bitwise CLR operation of GPIO18 R1** 0: Keep 1: CLR bits
17	**GPIO17**	GPIO17_R1	**Bitwise CLR operation of GPIO17 R1** 0: Keep 1: CLR bits
16	**GPIO16**	GPIO16_R1	**Bitwise CLR operation of GPIO16 R1** 0: Keep

© 2015 - 2017 MediaTek Inc.

This document contains information that is proprietary to MediaTek Inc. ("MediaTek") and/or its licensor(s).
Any unauthorized use, reproduction or disclosure of this document in whole or in part is strictly prohibited.

Bit(s)	Mnemonic	Name	Description
			1: CLR bits
15	**GPIO15**	GPIO15_R1	**Bitwise CLR operation of GPIO15 R1** 0: Keep 1: CLR bits
14	**GPIO14**	GPIO14_R1	**Bitwise CLR operation of GPIO14 R1** 0: Keep 1: CLR bits
13	**GPIO13**	GPIO13_R1	**Bitwise CLR operation of GPIO13 R1** 0: Keep 1: CLR bits
12	**GPIO12**	GPIO12_R1	**Bitwise CLR operation of GPIO12 R1** 0: Keep 1: CLR bits
11	**GPIO11**	GPIO11_R1	**Bitwise CLR operation of GPIO11 R1** 0: Keep 1: CLR bits
9	**GPIO9**	GPIO9_R1	**Bitwise CLR operation of GPIO9 R1** 0: Keep 1: CLR bits
8	**GPIO8**	GPIO8_R1	**Bitwise CLR operation of GPIO8 R1** 0: Keep 1: CLR bits
7	**GPIO7**	GPIO7_R1	**Bitwise CLR operation of GPIO7 R1** 0: Keep 1: CLR bits
6	**GPIO6**	GPIO6_R1	**Bitwise CLR operation of GPIO6 R1** 0: Keep 1: CLR bits
5	**GPIO5**	GPIO5_R1	**Bitwise CLR operation of GPIO5 R1** 0: Keep 1: CLR bits
4	**GPIO4**	GPIO4_R1	**Bitwise CLR operation of GPIO4 R1** 0: Keep 1: CLR bits

A2020B30 GPIO_RESEN1_1 GPIO R1 Control 00000000

Bit	31	30	29	28	27	26	25	24	23	22	21	20	19	18	17	16
Name																GPIO 48
Type																RW
Reset																0
Bit	15	14	13	12	11	10	9	8	7	6	5	4	3	2	1	0
Name	GPIO 47	GPIO 46	GPIO 45	GPIO 44	GPIO 43	GPIO 42	GPIO 41	GPIO 40	GPIO 39	GPIO 38	GPIO 37	GPIO 36	GPIO 35	GPIO 34	GPIO 33	GPIO 32
Type	RW	RW	RW	RW	RW	RW	RW	RW	RW	RW	RW	RW	RW	RW	RW	RW
Reset	0	0	0	0	0	0	0	0	0	0	0	0	0	0	0	0

Overview Configures GPIO R1 control

Bit(s)	Mnemonic	Name	Description
16	**GPIO48**	GPIO48_R1	**R1 for GPIO48** 0: Disable 1: Enable

© 2015 - 2017 MediaTek Inc.

This document contains information that is proprietary to MediaTek Inc. ("MediaTek") and/or its licensor(s).
Any unauthorized use, reproduction or disclosure of this document in whole or in part is strictly prohibited.

Bit(s)	Mnemonic	Name	Description
15	**GPIO47**	GPIO47_R1	**R1 for GPIO47** 0: Disable 1: Enable
14	**GPIO46**	GPIO46_R1	**R1 for GPIO46** 0: Disable 1: Enable
13	**GPIO45**	GPIO45_R1	**R1 for GPIO45** 0: Disable 1: Enable
12	**GPIO44**	GPIO44_R1	**R1 for GPIO44** 0: Disable 1: Enable
11	**GPIO43**	GPIO43_R1	**R1 for GPIO43** 0: Disable 1: Enable
10	**GPIO42**	GPIO42_R1	**R1 for GPIO42** 0: Disable 1: Enable
9	**GPIO41**	GPIO41_R1	**R1 for GPIO41** 0: Disable 1: Enable
8	**GPIO40**	GPIO40_R1	**R1 for GPIO40** 0: Disable 1: Enable
7	**GPIO39**	GPIO39_R1	**R1 for GPIO39** 0: Disable 1: Enable
6	**GPIO38**	GPIO38_R1	**R1 for GPIO38** 0: Disable 1: Enable
5	**GPIO37**	GPIO37_R1	**R1 for GPIO37** 0: Disable 1: Enable
4	**GPIO36**	GPIO36_R1	**R1 for GPIO36** 0: Disable 1: Enable
3	**GPIO35**	GPIO35_R1	**R1 for GPIO35** 0: Disable 1: Enable
2	**GPIO34**	GPIO34_R1	**R1 for GPIO34** 0: Disable 1: Enable
1	**GPIO33**	GPIO33_R1	**R1 for GPIO33** 0: Disable 1: Enable
0	**GPIO32**	GPIO32_R1	**R1 for GPIO32** 0: Disable 1: Enable

A2020B34 **GPIO_RESEN1_1_SET** **GPIO R1 Control** **00000000**

Bit	31	30	29	28	27	26	25	24	23	22	21	20	19	18	17	16

© 2015 - 2017 MediaTek Inc.

This document contains information that is proprietary to MediaTek Inc. (“MediaTek”) and/or its licensor(s).
Any unauthorized use, reproduction or disclosure of this document in whole or in part is strictly prohibited.

Name																GPIO 48
Type																WO
Reset																0
Bit	15	14	13	12	11	10	9	8	7	6	5	4	3	2	1	0
Name	GPIO 47	GPIO 46	GPIO 45	GPIO 44	GPIO 43	GPIO 42	GPIO 41	GPIO 40	GPIO 39	GPIO 38	GPIO 37	GPIO 36	GPIO 35	GPIO 34	GPIO 33	GPIO 32
Type	WO	WO	WO	WO	WO	WO	WO	WO	WO	WO	WO	WO	WO	WO	WO	WO
Reset	0	0	0	0	0	0	0	0	0	0	0	0	0	0	0	0

Overview For bitwise access of GPIO_RESEN1_1

Bit(s)	Mnemonic	Name	Description
16	**GPIO48**	GPIO48_R1	**Bitwise SET operation of GPIO48 R1** 0: Keep 1: SET bits
15	**GPIO47**	GPIO47_R1	**Bitwise SET operation of GPIO47 R1** 0: Keep 1: SET bits
14	**GPIO46**	GPIO46_R1	**Bitwise SET operation of GPIO46 R1** 0: Keep 1: SET bits
13	**GPIO45**	GPIO45_R1	**Bitwise SET operation of GPIO45 R1** 0: Keep 1: SET bits
12	**GPIO44**	GPIO44_R1	**Bitwise SET operation of GPIO44 R1** 0: Keep 1: SET bits
11	**GPIO43**	GPIO43_R1	**Bitwise SET operation of GPIO43 R1** 0: Keep 1: SET bits
10	**GPIO42**	GPIO42_R1	**Bitwise SET operation of GPIO42 R1** 0: Keep 1: SET bits
9	**GPIO41**	GPIO41_R1	**Bitwise SET operation of GPIO41 R1** 0: Keep 1: SET bits
8	**GPIO40**	GPIO40_R1	**Bitwise SET operation of GPIO40 R1** 0: Keep 1: SET bits
7	**GPIO39**	GPIO39_R1	**Bitwise SET operation of GPIO39 R1** 0: Keep 1: SET bits
6	**GPIO38**	GPIO38_R1	**Bitwise SET operation of GPIO38 R1** 0: Keep 1: SET bits
5	**GPIO37**	GPIO37_R1	**Bitwise SET operation of GPIO37 R1** 0: Keep 1: SET bits
4	**GPIO36**	GPIO36_R1	**Bitwise SET operation of GPIO36 R1** 0: Keep 1: SET bits
3	**GPIO35**	GPIO35_R1	**Bitwise SET operation of GPIO35 R1** 0: Keep 1: SET bits
2	**GPIO34**	GPIO34_R1	**Bitwise SET operation of GPIO34 R1** 0: Keep

© 2015 - 2017 MediaTek Inc.

This document contains information that is proprietary to MediaTek Inc. ("MediaTek") and/or its licensor(s).
Any unauthorized use, reproduction or disclosure of this document in whole or in part is strictly prohibited.

Bit(s)	Mnemonic	Name	Description
			1: SET bits
1	**GPIO33**	GPIO33_R1	**Bitwise SET operation of GPIO33 R1** 0: Keep 1: SET bits
0	**GPIO32**	GPIO32_R1	**Bitwise SET operation of GPIO32 R1** 0: Keep 1: SET bits

A2020B38 GPIO_RESEN1_1_CLR GPIO R1 Control 00000000

Bit	31	30	29	28	27	26	25	24	23	22	21	20	19	18	17	16
Name																**GPIO48**
Type																WO
Reset																0
Bit	15	14	13	12	11	10	9	8	7	6	5	4	3	2	1	0
Name	**GPIO47**	**GPIO46**	**GPIO45**	**GPIO44**	**GPIO43**	**GPIO42**	**GPIO41**	**GPIO40**	**GPIO39**	**GPIO38**	**GPIO37**	**GPIO36**	**GPIO35**	**GPIO34**	**GPIO33**	**GPIO32**
Type	WO	WO	WO	WO	WO	WO	WO	WO	WO	WO	WO	WO	WO	WO	WO	WO
Reset	0	0	0	0	0	0	0	0	0	0	0	0	0	0	0	0

Overview For bitwise access of GPIO_RESEN1_1

Bit(s)	Mnemonic	Name	Description
16	**GPIO48**	GPIO48_R1	**Bitwise CLR operation of GPIO48 R1** 0: Keep 1: CLR bits
15	**GPIO47**	GPIO47_R1	**Bitwise CLR operation of GPIO47 R1** 0: Keep 1: CLR bits
14	**GPIO46**	GPIO46_R1	**Bitwise CLR operation of GPIO46 R1** 0: Keep 1: CLR bits
13	**GPIO45**	GPIO45_R1	**Bitwise CLR operation of GPIO45 R1** 0: Keep 1: CLR bits
12	**GPIO44**	GPIO44_R1	**Bitwise CLR operation of GPIO44 R1** 0: Keep 1: CLR bits
11	**GPIO43**	GPIO43_R1	**Bitwise CLR operation of GPIO43 R1** 0: Keep 1: CLR bits
10	**GPIO42**	GPIO42_R1	**Bitwise CLR operation of GPIO42 R1** 0: Keep 1: CLR bits
9	**GPIO41**	GPIO41_R1	**Bitwise CLR operation of GPIO41 R1** 0: Keep 1: CLR bits
8	**GPIO40**	GPIO40_R1	**Bitwise CLR operation of GPIO40 R1** 0: Keep 1: CLR bits
7	**GPIO39**	GPIO39_R1	**Bitwise CLR operation of GPIO39 R1** 0: Keep 1: CLR bits

© 2015 - 2017 MediaTek Inc.

This document contains information that is proprietary to MediaTek Inc. (“MediaTek”) and/or its licensor(s).
Any unauthorized use, reproduction or disclosure of this document in whole or in part is strictly prohibited.

Bit(s)	Mnemonic	Name	Description
6	**GPIO38**	GPIO38_R1	**Bitwise CLR operation of GPIO38 R1** 0: Keep 1: CLR bits
5	**GPIO37**	GPIO37_R1	**Bitwise CLR operation of GPIO37 R1** 0: Keep 1: CLR bits
4	**GPIO36**	GPIO36_R1	**Bitwise CLR operation of GPIO36 R1** 0: Keep 1: CLR bits
3	**GPIO35**	GPIO35_R1	**Bitwise CLR operation of GPIO35 R1** 0: Keep 1: CLR bits
2	**GPIO34**	GPIO34_R1	**Bitwise CLR operation of GPIO34 R1** 0: Keep 1: CLR bits
1	**GPIO33**	GPIO33_R1	**Bitwise CLR operation of GPIO33 R1** 0: Keep 1: CLR bits
0	**GPIO32**	GPIO32_R1	**Bitwise CLR operation of GPIO32 R1** 0: Keep 1: CLR bits

A2020C00 GPIO_MODE0 GPIO Mode Control 00000000

Bit	31	30	29	28	27	26	25	24	23	22	21	20	19	18	17	16
Name		GPIO7				GPIO6				GPIO5				GPIO4		
Type		RW				RW				RW				RW		
Reset		0	0	0		0	0	0		0	0	0		0	0	0
Bit	15	14	13	12	11	10	9	8	7	6	5	4	3	2	1	0
Name	GPIO3				GPIO2				GPIO1				GPIO0			
Type	RW				RW				RW				RW			
Reset	0	0	0	0	0	0	0	0	0	0	0	0	0	0	0	0

Overview Configures GPIO aux. mode

Bit(s)	Mnemonic	Name	Description
30:28		GPIO7	**Aux. mode of GPIO_7** 0: GPIO7 (IO) 1: EINT6 (I) 2: MC1_A_DA1 (IO) 3: SLA_EDICK (I) 4: U2TXD (O) 5: Reserved 6: BT_BUCK_EN_HW (O) 7: MA_SPI0_B_MISO (I) 8: Reserved 9: Reserved
26:24		GPIO6	**Aux. mode of GPIO_6** 0: GPIO6 (IO) 1: EINT5 (I) 2: MC1_A_DA0 (IO) 3: SLA_EDIWS (I) 4: U2RXD (I) 5: Reserved 6: Reserved 7: MA_SPI0_B_MOSI (O) 8: Reserved

© 2015 - 2017 MediaTek Inc.

This document contains information that is proprietary to MediaTek Inc. ("MediaTek") and/or its licensor(s).
Any unauthorized use, reproduction or disclosure of this document in whole or in part is strictly prohibited.

Bit(s)	Mnemonic	Name	Description
			9: Reserved
22:20		GPIO5	**Aux. mode of GPIO_5** 0: GPIO5 (IO) 1: EINT4 (I) 2: MC1_A_CM0 (IO) 3: SLA_EDIDI (I) 4: Reserved 5: Reserved 6: U1TXD (O) 7: MA_SPI0_B_SCK (O) 8: Reserved 9: Reserved
18:16		GPIO4	**Aux. mode of GPIO_4** 0: GPIO4 (IO) 1: EINT3 (I) 2: MC1_A_CK (IO) 3: SLA_EDIDO (O) 4: Reserved 5: Reserved 6: U1RXD (I) 7: MA_SPI0_B_CS (O) 8: Reserved 9: Reserved
15:12		GPIO3	**Aux. mode of GPIO_3** 0: GPIO3 (IO) 1: EINT14 (I) 2: AUXADCIN_3 (AIO) 3: U3TXD (I) 4: U0RTS (O) 5: MA_SPI1_A_MISO (I) 6: MA_EDICK (O) 7: MA_SPI0_A_MISO (I) 8: DEBUGMON14 (IO) 9: BTPRI (IO)
11:8		GPIO2	**Aux. mode of GPIO_2** 0: GPIO2 (IO) 1: EINT2 (I) 2: AUXADCIN_2 (AIO) 3: U3RXD (I) 4: U0CTS (I) 5: MA_SPI1_A_MOSI (O) 6: MA_EDIWS (O) 7: MA_SPI0_A_MOSI (O) 8: DEBUGMON13 (IO) 9: BT_BUCK_EN_HW (O)
7:4		GPIO1	**Aux. mode of GPIO_1** 0: GPIO1 (IO) 1: EINT1 (I) 2: AUXADCIN_1 (AIO) 3: U2TXD (O) 4: PWM1 (O) 5: MA_SPI1_A_SCK (O) 6: MA_EDIDI (I) 7: MA_SPI0_A_SCK (O) 8: DEBUGMON12 (IO) 9: BTDBGACKN (I)
3:0		GPIO0	**Aux. mode of GPIO_0** 0: GPIO0 (IO) 1: EINT0 (I) 2: AUXADCIN_0 (AIO) 3: U2RXD (I)

© 2015 - 2017 MediaTek Inc.

This document contains information that is proprietary to MediaTek Inc. ("MediaTek") and/or its licensor(s).
Any unauthorized use, reproduction or disclosure of this document in whole or in part is strictly prohibited.

Bit(s)	Mnemonic	Name	Description
			4: PWM0 (O) 5: MA_SPI1_A_CS (O) 6: MA_EDID0 (O) 7: MA_SPI0_A_CS (O) 8: DEBUGMON11 (IO) 9: BTJTDI (O)

A2020C04 **GPIO_MODE0_SET** **GPIO Mode Control** **00000000**

Bit	31	30	29	28	27	26	25	24	23	22	21	20	19	18	17	16
Name		GPIO7				GPIO6				GPIO5				GPIO4		
Type		WO				WO				WO				WO		
Reset		0	0	0		0	0	0		0	0	0		0	0	0
Bit	15	14	13	12	11	10	9	8	7	6	5	4	3	2	1	0
Name	GPIO3				GPIO2				GPIO1				GPIO0			
Type	WO				WO				WO				WO			
Reset	0	0	0	0	0	0	0	0	0	0	0	0	0	0	0	0

Overview For bitwise access of GPIO_MODE0

Bit(s)	Mnemonic	Name	Description
30:28		GPIO7	**Bitwise SET operation for Aux. mode of GPIO_7** 0: Keep 1: SET bits
26:24		GPIO6	**Bitwise SET operation for Aux. mode of GPIO_6** 0: Keep 1: SET bits
22:20		GPIO5	**Bitwise SET operation for Aux. mode of GPIO_5** 0: Keep 1: SET bits
18:16		GPIO4	**Bitwise SET operation for Aux. mode of GPIO_4** 0: Keep 1: SET bits
15:12		GPIO3	**Bitwise SET operation for Aux. mode of GPIO_3** 0: Keep 1: SET bits
11:8		GPIO2	**Bitwise SET operation for Aux. mode of GPIO_2** 0: Keep 1: SET bits
7:4		GPIO1	**Bitwise SET operation for Aux. mode of GPIO_1** 0: Keep 1: SET bits
3:0		GPIO0	**Bitwise SET operation for Aux. mode of GPIO_0** 0: Keep 1: SET bits

A2020C08 **GPIO_MODE0_CLR** **GPIO Mode Control** **00000000**

Bit	31	30	29	28	27	26	25	24	23	22	21	20	19	18	17	16
Name		GPIO7				GPIO6				GPIO5				GPIO4		
Type		WO				WO				WO				WO		
Reset		0	0	0		0	0	0		0	0	0		0	0	0
Bit	15	14	13	12	11	10	9	8	7	6	5	4	3	2	1	0

© 2015 - 2017 MediaTek Inc.

This document contains information that is proprietary to MediaTek Inc. ("MediaTek") and/or its licensor(s).
Any unauthorized use, reproduction or disclosure of this document in whole or in part is strictly prohibited.

Name	GPIO3				GPIO2				GPIO1				GPIO0			
Type	WO				WO				WO				WO			
Reset	0	0	0	0	0	0	0	0	0	0	0	0	0	0	0	0

Overview For bitwise access of GPIO_MODE0

Bit(s)	Mnemonic	Name	Description
30:28		GPIO7	**Bitwise CLR operation for Aux. mode of GPIO_7** 0: Keep 1: CLR bits
26:24		GPIO6	**Bitwise CLR operation for Aux. mode of GPIO_6** 0: Keep 1: CLR bits
22:20		GPIO5	**Bitwise CLR operation for Aux. mode of GPIO_5** 0: Keep 1: CLR bits
18:16		GPIO4	**Bitwise CLR operation for Aux. mode of GPIO_4** 0: Keep 1: CLR bits
15:12		GPIO3	**Bitwise CLR operation for Aux. mode of GPIO_3** 0: Keep 1: CLR bits
11:8		GPIO2	**Bitwise CLR operation for Aux. mode of GPIO_2** 0: Keep 1: CLR bits
7:4		GPIO1	**Bitwise CLR operation for Aux. mode of GPIO_1** 0: Keep 1: CLR bits
3:0		GPIO0	**Bitwise CLR operation for Aux. mode of GPIO_0** 0: Keep 1: CLR bits

A2020C10 GPIO_MODE1 GPIO Mode Control 00000000

Bit	31	30	29	28	27	26	25	24	23	22	21	20	19	18	17	16
Name		GPIO15				GPIO14				GPIO13				GPIO12		
Type		RW				RW				RW				RW		
Reset		0	0	0		0	0	0		0	0	0		0	0	0
Bit	15	14	13	12	11	10	9	8	7	6	5	4	3	2	1	0
Name		GPIO11			GPIO10					GPIO9				GPIO8		
Type		RW			RW					RW				RW		
Reset		0	0	0	0	0	0	0		0	0	0		0	0	0

Overview Configures GPIO aux. mode

Bit(s)	Mnemonic	Name	Description
30:28		GPIO15	**Aux. mode of GPIO_15** 0: GPIO15 (IO) 1: EINT13 (I) 2: Reserved 3: Reserved 4: Reserved 5: PWM4 (O) 6: Reserved 7: Reserved 8: Reserved 9: Reserved

© 2015 - 2017 MediaTek Inc.

This document contains information that is proprietary to MediaTek Inc. ("MediaTek") and/or its licensor(s).
Any unauthorized use, reproduction or disclosure of this document in whole or in part is strictly prohibited.

Bit(s)	Mnemonic	Name	Description
26:24		GPIO14	**Aux. mode of GPIO_14** 0: GPIO14 (IO) 1: EINT12 (I) 2: CLKO4 (O) 3: MA_EDICK (O) 4: MA_SPI1_B_MISO (O) 5: PWM3 (O) 6: SLA_EDICK (I) 7: Reserved 8: Reserved 9: Reserved
22:20		GPIO13	**Aux. mode of GPIO_13** 0: GPIO13 (IO) 1: EINT11 (I) 2: CLKO3 (O) 3: MA_EDIWS (O) 4: MA_SPI1_B_MOSI (O) 5: PWM2 (O) 6: SLA_EDIWS (I) 7: Reserved 8: Reserved 9: Reserved
18:16		GPIO12	**Aux. mode of GPIO_12** 0: GPIO12 (IO) 1: EINT10 (I) 2: Reserved 3: MA_EDIDI (I) 4: MA_SPI1_B_SCK (O) 5: PWM1 (O) 6: SLA_EDIDI (I) 7: Reserved 8: Reserved 9: Reserved
14:12		GPIO11	**Aux. mode of GPIO_11** 0: GPIO11 (IO) 1: EINT9 (I) 2: BT_BUCK_EN_HW (O) 3: MA_EDIDO (O) 4: MA_SPI1_B_CS (O) 5: PWM0 (O) 6: SLA_EDIDO (O) 7: Reserved 8: Reserved 9: Reserved
11:8		GPIO10	**Aux. mode of GPIO_10** 0: GPIO10 (IO) 1: EINT15 (I) 2: AUXADCIN_4(AIO) 3: Reserved 4: Reserved 5: Reserved 6: Reserved 7: Reserved 8: DEBUGMON15(IO) 9: BTPRI(IO)
6:4		GPIO9	**Aux. mode of GPIO_9** 0: GPIO9 (IO) 1: EINT8 (I) 2: MC1_A_DA3 (IO) 3: Reserved 4: Reserved

© 2015 - 2017 MediaTek Inc.

This document contains information that is proprietary to MediaTek Inc. (“MediaTek”) and/or its licensor(s).
Any unauthorized use, reproduction or disclosure of this document in whole or in part is strictly prohibited.

Bit(s)	Mnemonic	Name	Description
			5: Reserved 6: SDA2 (IO) 7: Reserved 8: Reserved 9: Reserved
2:0		GPIO8	**Aux. mode of GPIO_8** 0: GPIO8 (IO) 1: EINT7 (I) 2: MC1_A_DA2 (IO) 3: Reserved 4: Reserved 5: Reserved 6: SCL2 (IO) 7: Reserved 8: Reserved 9: Reserved

A2020C14 **GPIO_MODE1_SET** **GPIO Mode Control** **00000000**

Bit	31	30	29	28	27	26	25	24	23	22	21	20	19	18	17	16
Name		GPIO15				GPIO14				GPIO13				GPIO12		
Type		WO				WO				WO				WO		
Reset		0	0	0		0	0	0		0	0	0		0	0	0
Bit	15	14	13	12	11	10	9	8	7	6	5	4	3	2	1	0
Name		GPIO11			GPIO10					GPIO9				GPIO8		
Type		WO			WO					WO				WO		
Reset		0	0	0	0	0	0	0		0	0	0		0	0	0

Overview For bitwise access of GPIO_MODE1

Bit(s)	Mnemonic	Name	Description
30:28		GPIO15	**Bitwise SET operation for Aux. mode of KCOL1** 0: Keep 1: SET bits
26:24		GPIO14	**Bitwise SET operation for Aux. mode of KCOL2** 0: Keep 1: SET bits
22:20		GPIO13	**Bitwise SET operation for Aux. mode of KCOL3** 0: Keep 1: SET bits
18:16		GPIO12	**Bitwise SET operation for Aux. mode of KCOL4** 0: Keep 1: SET bits
14:12		GPIO11	**Bitwise SET operation for Aux. mode of UTXD1** 0: Keep 1: SET bits
11:8		GPIO10	**Bitwise SET operation for Aux. mode of URXD1** 0: Keep 1: SET bits
6:4		GPIO9	**Bitwise SET operation for Aux. mode of GPIO_9** 0: Keep 1: SET bits
2:0		GPIO8	**Bitwise SET operation for Aux. mode of GPIO_8** 0: Keep 1: SET bits

© 2015 - 2017 MediaTek Inc.

This document contains information that is proprietary to MediaTek Inc. (“MediaTek”) and/or its licensor(s).
Any unauthorized use, reproduction or disclosure of this document in whole or in part is strictly prohibited.

A2020C18 **GPIO_MODE1_CLR** **GPIO Mode Control** **00000000**

Bit	31	30	29	28	27	26	25	24	23	22	21	20	19	18	17	16
Name		GPIO15				GPIO14				GPIO13				GPIO12		
Type		WO				WO				WO				WO		
Reset		0	0	0		0	0	0		0	0	0		0	0	0
Bit	15	14	13	12	11	10	9	8	7	6	5	4	3	2	1	0
Name		GPIO11			GPIO10					GPIO9				GPIO8		
Type		WO			WO					WO				WO		
Reset		0	0	0	0	0	0	0		0	0	0		0	0	0

Overview For bitwise access of GPIO_MODE1

Bit(s)	Mnemonic	Name	Description
30:28		GPIO15	**Bitwise CLR operation for Aux. mode of KCOL1** 0: Keep 1: CLR bits
26:24		GPIO14	**Bitwise CLR operation for Aux. mode of KCOL2** 0: Keep 1: CLR bits
22:20		GPIO13	**Bitwise CLR operation for Aux. mode of KCOL3** 0: Keep 1: CLR bits
18:16		GPIO12	**Bitwise CLR operation for Aux. mode of KCOL4** 0: Keep 1: CLR bits
14:12		GPIO11	**Bitwise CLR operation for Aux. mode of UTXD1** 0: Keep 1: CLR bits
11:8		GPIO10	**Bitwise CLR operation for Aux. mode of URXD1** 0: Keep 1: CLR bits
6:4		GPIO9	**Bitwise CLR operation for Aux. mode of GPIO_9** 0: Keep 1: CLR bits
2:0		GPIO8	**Bitwise CLR operation for Aux. mode of GPIO_8** 0: Keep 1: CLR bits

A2020C20 **GPIO_MODE2** **GPIO Mode Control** **00000011**

Bit	31	30	29	28	27	26	25	24	23	22	21	20	19	18	17	16
Name	GPIO23				GPIO22				GPIO21					GPIO20		
Type	RW				RW				RW					RW		
Reset	0	0	0	0	0	0	0	0	0	0	0	0		0	0	0
Bit	15	14	13	12	11	10	9	8	7	6	5	4	3	2	1	0
Name	GPIO19				GPIO18					GPIO17				GPIO16		
Type	RW				RW					RW				RW		
Reset	0	0	0	0	0	0	0	0		0	0	1		0	0	1

Overview Configures GPIO aux. mode

Bit(s)	Mnemonic	Name	Description
31:28		GPIO23	**Aux. mode of GPIO_23**

© 2015 - 2017 MediaTek Inc.

This document contains information that is proprietary to MediaTek Inc. ("MediaTek") and/or its licensor(s).
Any unauthorized use, reproduction or disclosure of this document in whole or in part is strictly prohibited.

Bit(s)	Mnemonic	Name	Description
			0: GPIO23 (IO) 1: KROW0 (IO) 2: EINT19 (I) 3: CLKO0 (O) 4: U1CTS(I) 5: TRACEDATA3 (O) 6: MC_RST (O) 7: DEBUGMON9 (IO) 8: JTRST_B (I) 9: BTJTRSTB (I)
27:24		GPIO22	**Aux. mode of GPIO_22** 0: GPIO22 (IO) 1: KROW1 (IO) 2: U1TXD (O) 3: U3TXD (O) 4: Reserved 5: TRACEDATA2 (O) 6: TRACE_SWV (O) 7: DEBUGMON5 (IO) 8: JTDO (O) 9: BTDBGIN (I)
23:20		GPIO21	**Aux. mode of GPIO_21** 0: GPIO21 (IO) 1: KROW2 (IO) 2: Reserved 3: GPCOUNTER_0 (I) 4: U1RTS (O) 5: TRACECLK (O) 6: Reserved 7: DEBUGMON4 (IO) 8: JTCK (I) 9: BTJTCK (I)
18:16		GPIO20	**Aux. mode of GPIO_20** 0: GPIO20 (IO) 1: KCOL0 (IO) 2: GPSFSYNC (O) 3: U0CTS (I) 4: SDA2 (IO) 5: Reserved 6: MA_SPI2_CS1(O) 7: DEBUGMON7 (IO) 8: Reserved 9: Reserved
15:12		GPIO19	**Aux. mode of GPIO_19** 0: GPIO19 (IO) 1: KCOL1 (IO) 2: EINT18 (I) 3: U0RTS (O) 4: SCL2 (IO) 5: TRACEDATA1 (O) 6: Reserved 7: DEBUGMON2 (IO) 8: JTMS (IO) 9: BTJTMS (IO)
11:8		GPIO18	**Aux. mode of GPIO_18** 0: GPIO18 (IO) 1: KCOL2 (IO) 2: U1RXD (I) 3: U3RXD (I) 4: Reserved 5: TRACEDATA0 (O) 6: LSCE1_B1 (O)

© 2015 - 2017 MediaTek Inc.

This document contains information that is proprietary to MediaTek Inc. (“MediaTek”) and/or its licensor(s).
Any unauthorized use, reproduction or disclosure of this document in whole or in part is strictly prohibited.

Bit(s)	Mnemonic	Name	Description
			7: DEBUGMON6 (IO) 8: JTDI (I) 9: BTJTDI (IO)
6:4		GPIO17	**Aux. mode of GPIO_17** 0: GPIO17 (IO) 1: U0TXD (O) 2: Reserved 3: EINT17 (I) 4: Reserved 5: Reserved 6: DEBUGMIN_CK (I) 7: Reserved 8: Reserved 9: Reserved
2:0		GPIO16	**Aux. mode of GPIO_16** 0: GPIO16 (IO) 1: U0RXD (I) 2: Reserved 3: EINT16 (I) 4: Reserved 5: Reserved 6: DEBUGMIN0 (I) 7: DEBUGMON0 (IO) 8: Reserved 9: Reserved

A2020C24 **GPIO_MODE2_SET** **GPIO Mode Control** **00000000**

Bit	31	30	29	28	27	26	25	24	23	22	21	20	19	18	17	16
Name	GPIO23				GPIO22				GPIO21					GPIO20		
Type	WO				WO				WO					WO		
Reset	0	0	0	0	0	0	0	0	0	0	0	0		0	0	0
Bit	15	14	13	12	11	10	9	8	7	6	5	4	3	2	1	0
Name	GPIO19				GPIO18					GPIO17				GPIO16		
Type	WO				WO					WO				WO		
Reset	0	0	0	0	0	0	0	0		0	0	0		0	0	0

Overview For bitwise access of GPIO_MODE2

Bit(s)	Mnemonic	Name	Description
31:28		GPIO23	**Bitwise SET operation for Aux. mode of BPI_BUS1** 0: Keep 1: SET bits
27:24		GPIO22	**Bitwise SET operation for Aux. mode of BPI_BUS2** 0: Keep 1: SET bits
23:20		GPIO21	**Bitwise SET operation for Aux. mode of KROW0** 0: Keep 1: SET bits
18:16		GPIO20	**Bitwise SET operation for Aux. mode of KROW1** 0: Keep 1: SET bits
15:12		GPIO19	**Bitwise SET operation for Aux. mode of KROW2** 0: Keep 1: SET bits
11:8		GPIO18	**Bitwise SET operation for Aux. mode of KROW3**

© 2015 - 2017 MediaTek Inc.

This document contains information that is proprietary to MediaTek Inc. ("MediaTek") and/or its licensor(s).
Any unauthorized use, reproduction or disclosure of this document in whole or in part is strictly prohibited.

Bit(s)	Mnemonic	Name	Description
			0: Keep 1: SET bits
6:4		GPIO17	**Bitwise SET operation for Aux. mode of KROW4** 0: Keep 1: SET bits
2:0		GPIO16	**Bitwise SET operation for Aux. mode of KCOL0** 0: Keep 1: SET bits

A2020C28 GPIO_MODE2_CLR GPIO Mode Control 00000000

Bit	31	30	29	28	27	26	25	24	23	22	21	20	19	18	17	16
Name	GPIO23				GPIO22				GPIO21					GPIO20		
Type	WO				WO				WO					WO		
Reset	0	0	0	0	0	0	0	0	0	0	0	0		0	0	0
Bit	15	14	13	12	11	10	9	8	7	6	5	4	3	2	1	0
Name	GPIO19				GPIO18					GPIO17				GPIO16		
Type	WO				WO					WO				WO		
Reset	0	0	0	0	0	0	0	0		0	0	0		0	0	0

Overview For bitwise access of GPIO_MODE2

Bit(s)	Mnemonic	Name	Description
31:28		GPIO23	**Bitwise CLR operation for Aux. mode of BPI_BUS1** 0: Keep 1: CLR bits
27:24		GPIO22	**Bitwise CLR operation for Aux. mode of BPI_BUS2** 0: Keep 1: CLR bits
23:20		GPIO21	**Bitwise CLR operation for Aux. mode of KROW0** 0: Keep 1: CLR bits
18:16		GPIO20	**Bitwise CLR operation for Aux. mode of KROW1** 0: Keep 1: CLR bits
15:12		GPIO19	**Bitwise CLR operation for Aux. mode of KROW2** 0: Keep 1: CLR bits
11:8		GPIO18	**Bitwise CLR operation for Aux. mode of KROW3** 0: Keep 1: CLR bits
6:4		GPIO17	**Bitwise CLR operation for Aux. mode of KROW4** 0: Keep 1: CLR bits
2:0		GPIO16	**Bitwise CLR operation for Aux. mode of KCOL0** 0: Keep 1: CLR bits

A2020C30 GPIO_MODE3 GPIO Mode Control 00000000

Bit	31	30	29	28	27	26	25	24	23	22	21	20	19	18	17	16
Name	GPIO31				GPIO30				GPIO29				GPIO28			
Type	RW				RW				RW				RW			

© 2015 - 2017 MediaTek Inc.

This document contains information that is proprietary to MediaTek Inc. ("MediaTek") and/or its licensor(s).
Any unauthorized use, reproduction or disclosure of this document in whole or in part is strictly prohibited.

Reset	0	0	0	0	0	0	0	0	0	0	0	0	0	0	0	0
Bit	15	14	13	12	11	10	9	8	7	6	5	4	3	2	1	0
Name	GPIO27				GPIO26				GPIO25				GPIO24			
Type	RW				RW				RW				RW			
Reset	0	0	0	0	0	0	0	0	0	0	0	0	0	0	0	0

Overview Configures GPIO aux. mode

Bit(s)	Mnemonic	Name	Description
31:28		GPIO31	**Aux. mode of GPIO_31** 0: GPIO31 (IO) 1: SDA0 (IO) 2: EINT12 (I) 3: PWM1 (O) 4: U1TXD (I) 5: MC0_CM0 (IO) 6: DEBUGMIN1 (I) 7: DEBUGMON1 (IO) 8: BT_RGPIO1 (IO) 9: SDA2 (IO)
27:24		GPIO30	**Aux. mode of GPIO_30** 0: GPIO30 (IO) 1: SCL0 (IO) 2: EINT11 (I) 3: PWM0 (O) 4: U1RXD (I) 5: MC0_CK (IO) 6: BT_RGPIO0 (IO) 7: DEBUGMON0 (IO) 8: Reserved 9: SCL2 (IO)
23:20		GPIO29	**Aux. mode of GPIO_29** 0: GPIO29 (IO) 1: CMCSK (I) 2: LPTE (I) 3: Reserved 4: CMCSD2 (I) 5: EINT10 (I) 6: Reserved 7: DEBUGMON15 (IO) 8: MC1_B_DA1(IO) 9: BT_RGPIO2 (IO)
19:16		GPIO28	**Aux. mode of GPIO_28** 0: GPIO28 (IO) 1: CMMCLK (O) 2: LSA0DA1 (O) 3: DAISYNC (O) 4: MA_SPI2_A_MISO (I) 5: MA_SPI3_A_MISO (I) 6: JTDO (O) 7: DEBUGMON14 (IO) 8: MC1_B_DA0(IO) 9: SLV_SPI0_MISO (O)
15:12		GPIO27	**Aux. mode of GPIO_27** 0: GPIO27 (IO) 1: CMCSD1 (O) 2: LSDA1 (IO) 3: DAIPCMOUT (I) 4: MA_SPI2_A_MOSI (O) 5: MA_SPI3_A_MOSI (O) 6: JTRST_B (I) 7: DEBUGMON13 (IO)

© 2015 - 2017 MediaTek Inc.

This document contains information that is proprietary to MediaTek Inc. ("MediaTek") and/or its licensor(s).
Any unauthorized use, reproduction or disclosure of this document in whole or in part is strictly prohibited.

Bit(s)	Mnemonic	Name	Description
			8: MC1_B_CK(IO) 9: SLV_SPI0_MOSI (I)
11:8		GPIO26	**Aux. mode of GPIO_26** 0: GPIO26 (IO) 1: CMCSD0 (O) 2: LSCE_B1 (O) 3: DAIPCMIN (I) 4: MA_SPI2_A_SCK (O) 5: MA_SPI3_A_SCK (O) 6: JTCK (I) 7: DEBUGMON12 (IO) 8: MC1_B_CM0 (IO) 9: SLV_SPI0_SCK (I)
7:4		GPIO25	**Aux. mode of GPIO_25** 0: GPIO25 (IO) 1: CMPDN (O) 2: LSCK1 (O) 3: DAICLK (O) 4: MA_SPI2_A_CS (O) 5: MA_SPI3_A_CS (O) 6: JTMS (IO) 7: DEBUGMON11 (IO) 8: MC1_B_DA2 (IO) 9: SLV_SPI0_CS (I)
3:0		GPIO24	**Aux. mode of GPIO_24** 0: GPIO24 (IO) 1: CMRST (O) 2: LSRSTB (O) 3: CLKO1 (O) 4: EINT9 (I) 5: GPCOUNTER_0 (I) 6: JTDI (I) 7: DEBUGMON10 (IO) 8: MC1_B_DA3 (IO) 9: Reserved

A2020C34 GPIO_MODE3_SET GPIO Mode Control 00000000

Bit	31	30	29	28	27	26	25	24	23	22	21	20	19	18	17	16
Name	GPIO31				GPIO30				GPIO29				GPIO28			
Type	WO				WO				WO				WO			
Reset	0	0	0	0	0	0	0	0	0	0	0	0	0	0	0	0
Bit	15	14	13	12	11	10	9	8	7	6	5	4	3	2	1	0
Name	GPIO27				GPIO26				GPIO25				GPIO24			
Type	WO				WO				WO				WO			
Reset	0	0	0	0	0	0	0	0	0	0	0	0	0	0	0	0

Overview For bitwise access of GPIO_MODE3

Bit(s)	Mnemonic	Name	Description
31:28		GPIO31	**Bitwise SET operation for Aux. mode of MCCK** 0: Keep 1: SET bits
27:24		GPIO30	**Bitwise SET operation for Aux. mode of CMCSK** 0: Keep 1: SET bits
23:20		GPIO29	**Bitwise SET operation for Aux. mode of CMMCLK**

© 2015 - 2017 MediaTek Inc.

This document contains information that is proprietary to MediaTek Inc. ("MediaTek") and/or its licensor(s).
Any unauthorized use, reproduction or disclosure of this document in whole or in part is strictly prohibited.

Bit(s)	Mnemonic	Name	Description
			0: Keep 1: SET bits
19:16		GPIO28	**Bitwise SET operation for Aux. mode of CMCSD1** 0: Keep 1: SET bits
15:12		GPIO27	**Bitwise SET operation for Aux. mode of CMCSD0** 0: Keep 1: SET bits
11:8		GPIO26	**Bitwise SET operation for Aux. mode of CMPDN** 0: Keep 1: SET bits
7:4		GPIO25	**Bitwise SET operation for Aux. mode of CMRST** 0: Keep 1: SET bits
3:0		GPIO24	**Bitwise SET operation for Aux. mode of BPI_BUS0** 0: Keep 1: SET bits

A2020C38 GPIO_MODE3_CLR GPIO Mode Control 00000000

Bit	31	30	29	28	27	26	25	24	23	22	21	20	19	18	17	16
Name	GPIO31				GPIO30				GPIO29				GPIO28			
Type	WO				WO				WO				WO			
Reset	0	0	0	0	0	0	0	0	0	0	0	0	0	0	0	0
Bit	15	14	13	12	11	10	9	8	7	6	5	4	3	2	1	0
Name	GPIO27				GPIO26				GPIO25				GPIO24			
Type	WO				WO				WO				WO			
Reset	0	0	0	0	0	0	0	0	0	0	0	0	0	0	0	0

Overview For bitwise access of GPIO_MODE3

Bit(s)	Mnemonic	Name	Description
31:28		GPIO31	**Bitwise CLR operation for Aux. mode of MCCK** 0: Keep 1: CLR bits
27:24		GPIO30	**Bitwise CLR operation for Aux. mode of CMCSK** 0: Keep 1: CLR bits
23:20		GPIO29	**Bitwise CLR operation for Aux. mode of CMMCLK** 0: Keep 1: CLR bits
19:16		GPIO28	**Bitwise CLR operation for Aux. mode of CMCSD1** 0: Keep 1: CLR bits
15:12		GPIO27	**Bitwise CLR operation for Aux. mode of CMCSD0** 0: Keep 1: CLR bits
11:8		GPIO26	**Bitwise CLR operation for Aux. mode of CMPDN** 0: Keep 1: CLR bits
7:4		GPIO25	**Bitwise CLR operation for Aux. mode of CMRST** 0: Keep 1: CLR bits

© 2015 - 2017 MediaTek Inc.

This document contains information that is proprietary to MediaTek Inc. (“MediaTek”) and/or its licensor(s).
Any unauthorized use, reproduction or disclosure of this document in whole or in part is strictly prohibited.

Bit(s)	Mnemonic	Name	Description
3:0		GPIO24	**Bitwise CLR operation for Aux. mode of BPI_BUS0** 0: Keep 1: CLR bits

A2020C40 GPIO_MODE4 GPIO Mode Control 10001111

Bit	31	30	29	28	27	26	25	24	23	22	21	20	19	18	17	16
Name	GPIO39				GPIO38					GPIO37				GPIO36		
Type	RW				RW					RW				RW		
Reset	0	0	0	1	0	0	0	0		0	0	0		0	0	0
Bit	15	14	13	12	11	10	9	8	7	6	5	4	3	2	1	0
Name	GPIO35				GPIO34				GPIO33				GPIO32			
Type	RW				RW				RW				RW			
Reset	0	0	0	1	0	0	0	1	0	0	0	1	0	0	0	1

Overview Configures GPIO aux. mode

Bit(s)	Mnemonic	Name	Description
31:28		GPIO39	**Aux. mode of GPIO_39** 0: GPIO39 (IO) 1: LSCE_B0 (O) 2: EINT4 (I) 3: CMCSD0 (I) 4: CLKO4 (O) 5: SFSCS0 (O) 6: DEBUGMIN5 (I) 7: DEBUGMON5 (IO) 8: SCL1 (IO) 9: MA_SPI2_B_CS (O)
27:24		GPIO38	**Aux. mode of GPIO_38** 0: GPIO38 (IO) 1: LSRSTB (O) 2: Reserved 3: CMRST (O) 4: CLKO3 (O) 5: SFSWP (O) 6: Reserved 7: DEBUGMON9 (IO) 8: Reserved 9: SCL1(IO)
22:20		GPIO37	**Aux. mode of GPIO_37** 0: GPIO37 (IO) 1: SDA0 (IO) 2: SDA1 (IO) 3: Reserved 4: Reserved 5: Reserved 6: DEBUGMIN4 (I) 7: DEBUGMON4 (IO) 8: Reserved 9: Reserved
18:16		GPIO36	**Aux. mode of GPIO_36** 0: GPIO36 (IO) 1: SCL0 (IO) 2: SCL1 (IO) 3: Reserved 4: Reserved 5: Reserved 6: DEBUGMIN3 (I)

© 2015 - 2017 MediaTek Inc.

This document contains information that is proprietary to MediaTek Inc. (“MediaTek”) and/or its licensor(s).
Any unauthorized use, reproduction or disclosure of this document in whole or in part is strictly prohibited.

Bit(s)	Mnemonic	Name	Description
			7: DEBUGMON3 (IO) 8: Reserved 9: Reserved
15:12		GPIO35	**Aux. mode of GPIO_35** 0: GPIO35 (IO) 1: SLV_SPI0_MISO (I) 2: EINT3 (I) 3: PWM5 (O) 4: DAIPCMOUT (I) 5: MC0_DA3 (IO) 6: CLKO2 (O) 7: BT_RGPIO5 (IO) 8: Reserved 9: MA_SPI3_B_MISO (I)
11:8		GPIO34	**Aux. mode of GPIO_34** 0: GPIO34 (IO) 1: SLV_SPI0_MOSI (I) 2: EINT15 (I) 3: PWM4 (O) 4: DAICLK (I) 5: MC0_DA2 (IO) 6: BT_RGPIO4 (IO) 7: DEBUGMON4 (IO) 8: Reserved 9: MA_SPI3_B_MOSI (O)
7:4		GPIO33	**Aux. mode of GPIO_33** 0: GPIO33 (IO) 1: SLV_SPI0_SCK (I) 2: EINT14 (I) 3: PWM3 (O) 4: DAIPCMIN (I) 5: MC0_DA1 (IO) 6: BT_RGPIO3 (IO) 7: DEBUGMON3 (IO) 8: Reserved 9: MA_SPI3_B_SCK (O)
3:0		GPIO32	**Aux. mode of GPIO_32** 0: GPIO32 (IO) 1: SLV_SPI0_CS (I) 2: EINT13 (I) 3: PWM2 (O) 4: DAISYNC (O) 5: MC0_DA0 (IO) 6: DEBUGMIN2 (I) 7: DEBUGMON2 (IO) 8: Reserved 9: MA_SPI3_B_CS (O)

A2020C44 **GPIO_MODE4_SET** **GPIO Mode Control** **00000000**

Bit	31	30	29	28	27	26	25	24	23	22	21	20	19	18	17	16
Name	GPIO39				GPIO38					GPIO37				GPIO36		
Type	WO				WO					WO				WO		
Reset	0	0	0	0	0	0	0	0		0	0	0		0	0	0
Bit	15	14	13	12	11	10	9	8	7	6	5	4	3	2	1	0
Name	GPIO35				GPIO34				GPIO33				GPIO32			
Type	WO				WO				WO				WO			
Reset	0	0	0	0	0	0	0	0	0	0	0	0	0	0	0	0

© 2015 - 2017 MediaTek Inc.

This document contains information that is proprietary to MediaTek Inc. ("MediaTek") and/or its licensor(s).
Any unauthorized use, reproduction or disclosure of this document in whole or in part is strictly prohibited.

Overview For bitwise access of GPIO_MODE4

Bit(s)	Mnemonic	Name	Description
31:28		GPIO39	**Bitwise SET operation for Aux. mode of SIM1_SCLK** 0: Keep 1: SET bits
27:24		GPIO38	**Bitwise SET operation for Aux. mode of SIM1_SRST** 0: Keep 1: SET bits
22:20		GPIO37	**Bitwise SET operation for Aux. mode of SIM1_SIO** 0: Keep 1: SET bits
18:16		GPIO36	**Bitwise SET operation for Aux. mode of MCDA3** 0: Keep 1: SET bits
15:12		GPIO35	**Bitwise SET operation for Aux. mode of MCDA2** 0: Keep 1: SET bits
11:8		GPIO34	**Bitwise SET operation for Aux. mode of MCDA1** 0: Keep 1: SET bits
7:4		GPIO33	**Bitwise SET operation for Aux. mode of MCDA0** 0: Keep 1: SET bits
3:0		GPIO32	**Bitwise SET operation for Aux. mode of MCCM0** 0: Keep 1: SET bits

A2020C48 GPIO_MODE4_CLR GPIO Mode Control 00000000

Bit	31	30	29	28	27	26	25	24	23	22	21	20	19	18	17	16
Name	GPIO39				GPIO38					GPIO37				GPIO36		
Type	WO				WO					WO				WO		
Reset	0	0	0	0	0	0	0	0		0	0	0		0	0	0
Bit	15	14	13	12	11	10	9	8	7	6	5	4	3	2	1	0
Name	GPIO35				GPIO34				GPIO33				GPIO32			
Type	WO				WO				WO				WO			
Reset	0	0	0	0	0	0	0	0	0	0	0	0	0	0	0	0

Overview For bitwise access of GPIO_MODE4

Bit(s)	Mnemonic	Name	Description
31:28		GPIO39	**Bitwise CLR operation for Aux. mode of SIM1_SCLK** 0: Keep 1: CLR bits
27:24		GPIO38	**Bitwise CLR operation for Aux. mode of SIM1_SRST** 0: Keep 1: CLR bits
22:20		GPIO37	**Bitwise CLR operation for Aux. mode of SIM1_SIO** 0: Keep 1: CLR bits
18:16		GPIO36	**Bitwise CLR operation for Aux. mode of MCDA3** 0: Keep 1: CLR bits

© 2015 - 2017 MediaTek Inc.

This document contains information that is proprietary to MediaTek Inc. (“MediaTek”) and/or its licensor(s).
Any unauthorized use, reproduction or disclosure of this document in whole or in part is strictly prohibited.

Bit(s)	Mnemonic	Name	Description
15:12		GPIO35	**Bitwise CLR operation for Aux. mode of MCDA2** 0: Keep 1: CLR bits
11:8		GPIO34	**Bitwise CLR operation for Aux. mode of MCDA1** 0: Keep 1: CLR bits
7:4		GPIO33	**Bitwise CLR operation for Aux. mode of MCDA0** 0: Keep 1: CLR bits
3:0		GPIO32	**Bitwise CLR operation for Aux. mode of MCCM0** 0: Keep 1: CLR bits

A2020C50 GPIO_MODE5 GPIO Mode Control 00000000

Bit	31	30	29	28	27	26	25	24	23	22	21	20	19	18	17	16
Name		GPIO47				GPIO46				GPIO45			GPIO44			
Type		RW				RW				RW			RW			
Reset		0	0	0		0	0	0		0	0	0	0	0	0	0
Bit	15	14	13	12	11	10	9	8	7	6	5	4	3	2	1	0
Name	GPIO43				GPIO42				GPIO41				GPIO40			
Type	RW				RW				RW				RW			
Reset	0	0	0	0	0	0	0	0	0	0	0	0	0	0	0	0

Overview Configures GPIO aux. mode

Bit(s)	Mnemonic	Name	Description
30:28		GPIO47	**Aux. mode of GPIO_47** 0: GPIO47 (IO) 1: MA_SPI1_CS1 (O) 2: Reserved 3: Reserved 4: Reserved 5: Reserved 6: Reserved 7: DEBUGMON2 (IO) 8: Reserved 9: Reserved
26:24		GPIO46	**Aux. mode of GPIO_46** 0: GPIO46 (IO) 1: MA_SPI0_CS1 (O) 2: Reserved 3: Reserved 4: Reserved 5: Reserved 6: Reserved 7: DEBUGMON1 (IO) 8: Reserved 9: Reserved
22:20		GPIO45	**Aux. mode of GPIO_45** 0: GPIO45 (IO) 1: SRCLKENAI (I) 2: Reserved 3: Reserved 4: Reserved 5: Reserved 6: Reserved 7: Reserved

© 2015 - 2017 MediaTek Inc.

This document contains information that is proprietary to MediaTek Inc. ("MediaTek") and/or its licensor(s).
Any unauthorized use, reproduction or disclosure of this document in whole or in part is strictly prohibited.

Bit(s)	Mnemonic	Name	Description
			8: Reserved 9: Reserved
19:16		GPIO44	**Aux. mode of GPIO_44** 0: GPIO44 (IO) 1: LSCE1_B1 (O) 2: DISP_PWM (O) 3: Reserved 4: Reserved 5: Reserved 6: Reserved 7: DEBUGMON0 (IO) 8: DEBUGMON6 (IO) 9: Reserved
15:12		GPIO43	**Aux. mode of GPIO_43** 0: GPIO43 (IO) 1: LPTE (I) 2: EINT6 (I) 3: CMCSK (I) 4: CMCSD2 (I) 5: SFSIN (O) 6: Reserved 7: DEBUGMON7 (IO) 8: DEBUGMIN7 (I) 9: SDA1 (IO)
11:8		GPIO42	**Aux. mode of GPIO_42** 0: GPIO42 (IO) 1: LSA0DA0 (O) 2: LSCE1_B0 (O) 3: CMMCLK (O) 4: Reserved 5: SFSOUT (O) 6: Reserved 7: DEBUGMON8 (IO) 8: CLKO5 (O) 9: MA_SPI2_B_MISO (O)
7:4		GPIO41	**Aux. mode of GPIO_41** 0: GPIO41 (IO) 1: LSDA0 (IO) 2: EINT5 (I) 3: CMCSD1 (I) 4: WIFITOBT (I) 5: SFSCK (O) 6: DEBUGMIN6 (I) 7: DEBUGMON6 (IO) 8: SDA1 (IO) 9: MA_SPI2_B_MOSI (O)
3:0		GPIO40	**Aux. mode of GPIO_40** 0: GPIO40 (IO) 1: LSCK0 (O) 2: Reserved 3: CMPDN (O) 4: Reserved 5: SFSHOLD (O) 6: Reserved 7: DEBUGMON10 (IO) 8: Reserved 9: MA_SPI2_B_SCK (O)

A2020C54 GPIO_MODE5 GPIO Mode Control 00000000

© 2015 - 2017 MediaTek Inc.
This document contains information that is proprietary to MediaTek Inc. ("MediaTek") and/or its licensor(s).
Any unauthorized use, reproduction or disclosure of this document in whole or in part is strictly prohibited.

_SET

Bit	31	30	29	28	27	26	25	24	23	22	21	20	19	18	17	16
Name		GPIO47				GPIO46				GPIO45			GPIO44			
Type		WO				WO				WO			WO			
Reset		0	0	0		0	0	0		0	0	0	0	0	0	0
Bit	15	14	13	12	11	10	9	8	7	6	5	4	3	2	1	0
Name	GPIO43				GPIO42				GPIO41				GPIO40			
Type	WO				WO				WO				WO			
Reset	0	0	0	0	0	0	0	0	0	0	0	0	0	0	0	0

Overview For bitwise access of GPIO_MODE5

Bit(s)	Mnemonic	Name	Description
30:28		GPIO47	**Bitwise SET operation for Aux. mode of LSCK** 0: Keep 1: SET bits
26:24		GPIO46	**Bitwise SET operation for Aux. mode of LSCE_B** 0: Keep 1: SET bits
22:20		GPIO45	**Bitwise SET operation for Aux. mode of LSRSTB** 0: Keep 1: SET bits
19:16		GPIO44	**Bitwise SET operation for Aux. mode of SDA28** 0: Keep 1: SET bits
15:12		GPIO43	**Bitwise SET operation for Aux. mode of SCL28** 0: Keep 1: SET bits
11:8		GPIO42	**Bitwise SET operation for Aux. mode of SIM2_SCLK** 0: Keep 1: SET bits
7:4		GPIO41	**Bitwise SET operation for Aux. mode of SIM2_SRST** 0: Keep 1: SET bits
3:0		GPIO40	**Bitwise SET operation for Aux. mode of SIM2_SIO** 0: Keep 1: SET bits

A2020C58 **GPIO_MODE5_CLR** **GPIO Mode Control** **00000000**

Bit	31	30	29	28	27	26	25	24	23	22	21	20	19	18	17	16
Name		GPIO47				GPIO46				GPIO45			GPIO44			
Type		WO				WO				WO			WO			
Reset		0	0	0		0	0	0		0	0	0	0	0	0	0
Bit	15	14	13	12	11	10	9	8	7	6	5	4	3	2	1	0
Name	GPIO43				GPIO42				GPIO41				GPIO40			
Type	WO				WO				WO				WO			
Reset	0	0	0	0	0	0	0	0	0	0	0	0	0	0	0	0

Overview For bitwise access of GPIO_MODE5

Bit(s)	Mnemonic	Name	Description
30:28		GPIO47	**Bitwise CLR operation for Aux. mode of LSCK** 0: Keep 1: CLR bits

© 2015 - 2017 MediaTek Inc.
This document contains information that is proprietary to MediaTek Inc. ("MediaTek") and/or its licensor(s).
Any unauthorized use, reproduction or disclosure of this document in whole or in part is strictly prohibited.

Bit(s)	Mnemonic	Name	Description
26:24		GPIO46	**Bitwise CLR operation for Aux. mode of LSCE_B** 0: Keep 1: CLR bits
22:20		GPIO45	**Bitwise CLR operation for Aux. mode of LSRSTB** 0: Keep 1: CLR bits
19:16		GPIO44	**Bitwise CLR operation for Aux. mode of SDA28** 0: Keep 1: CLR bits
15:12		GPIO43	**Bitwise CLR operation for Aux. mode of SCL28** 0: Keep 1: CLR bits
11:8		GPIO42	**Bitwise CLR operation for Aux. mode of SIM2_SCLK** 0: Keep 1: CLR bits
7:4		GPIO41	**Bitwise CLR operation for Aux. mode of SIM2_SRST** 0: Keep 1: CLR bits
3:0		GPIO40	**Bitwise CLR operation for Aux. mode of SIM2_SIO** 0: Keep 1: CLR bits

A2020C60 GPIO_MODE6 GPIO Mode Control 00011110

Bit	31	30	29	28	27	26	25	24	23	22	21	20	19	18	17	16
Name																
Type																
Reset																
Bit	**15**	**14**	**13**	**12**	**11**	**10**	**9**	**8**	**7**	**6**	**5**	**4**	**3**	**2**	**1**	**0**
Name														GPIO48		
Type														RW		
Reset														0	0	0

Overview Configures GPIO aux. mode

Bit(s)	Mnemonic	Name	Description
2:0		GPIO48	**Aux. mode of GPIO_48** 0: GPIO48 (IO) 1: MA_SPI3_CS1 (O) 2: Reserved 3: Reserved 4: Reserved 5: Reserved 6: Reserved 7: DEBUGMON5 (IO) 8: Reserved 9: Reserved

A2020C64 GPIO_MODE6_SET GPIO Mode Control 00000000

Bit	31	30	29	28	27	26	25	24	23	22	21	20	19	18	17	16
Name																
Type																
Reset																

© 2015 - 2017 MediaTek Inc.

This document contains information that is proprietary to MediaTek Inc. ("MediaTek") and/or its licensor(s).
Any unauthorized use, reproduction or disclosure of this document in whole or in part is strictly prohibited.

Bit	15	14	13	12	11	10	9	8	7	6	5	4	3	2	1	0
Name														GPIO48		
Type														WO		
Reset														0	0	0

Overview For bitwise access of GPIO_MODE6

Bit(s)	Mnemonic	Name	Description
2:0		GPIO48	**Bitwise SET operation for Aux. mode of LSDA** 0: Keep 1: SET bits

A2020C68 GPIO_MODE6_CLR GPIO Mode Control 00000000

Bit	31	30	29	28	27	26	25	24	23	22	21	20	19	18	17	16
Name																
Type																
Reset																
Bit	15	14	13	12	11	10	9	8	7	6	5	4	3	2	1	0
Name														GPIO48		
Type														WO		
Reset														0	0	0

Overview For bitwise access of GPIO_MODE6

Bit(s)	Mnemonic	Name	Description
2:0		GPIO48	**Bitwise CLR operation for Aux. mode of LSDA** 0: Keep 1: CLR bits

A2020D00 GPIO_TDSEL0 GPIO TDSEL Control 00000000

Bit	31	30	29	28	27	26	25	24	23	22	21	20	19	18	17	16
Name	GPIO15		GPIO14		GPIO13		GPIO12		GPIO11		GPIO10		GPIO9		GPIO8	
Type	RW		RW		RW		RW		RW		RW		RW		RW	
Reset	0	0	0	0	0	0	0	0	0	0	0	0	0	0	0	0
Bit	15	14	13	12	11	10	9	8	7	6	5	4	3	2	1	0
Name	GPIO7		GPIO6		GPIO5		GPIO4		GPIO3		GPIO2		GPIO1		GPIO0	
Type	RW		RW		RW		RW		RW		RW		RW		RW	
Reset	0	0	0	0	0	0	0	0	0	0	0	0	0	0	0	0

Overview GPIO TX duty control register

Bit(s)	Mnemonic	Name	Description
31:30	**GPIO15**	GPIO15_TDSEL	**GPIO15 Tx duty control**
29:28	**GPIO14**	GPIO14_TDSEL	**GPIO14 Tx duty control**
27:26	**GPIO13**	GPIO13_TDSEL	**GPIO13 Tx duty control**
25:24	**GPIO12**	GPIO12_TDSEL	**GPIO12 Tx duty control**
23:22	**GPIO11**	GPIO11_TDSEL	**GPIO11 Tx duty control**
21:20	**GPIO10**	GPIO10_TDSEL	**GPIO10 Tx duty control**
19:18	**GPIO9**	GPIO9_TDSEL	**GPIO9 Tx duty control**
17:16	**GPIO8**	GPIO8_TDSEL	**GPIO8 Tx duty control**
15:14	**GPIO7**	GPIO7_TDSEL	**GPIO7 Tx duty control**

© 2015 - 2017 MediaTek Inc.

This document contains information that is proprietary to MediaTek Inc. ("MediaTek") and/or its licensor(s).
Any unauthorized use, reproduction or disclosure of this document in whole or in part is strictly prohibited.

Bit(s)	Mnemonic	Name	Description
13:12	**GPIO6**	GPIO6_TDSEL	**GPIO6 Tx duty control**
11:10	**GPIO5**	GPIO5_TDSEL	**GPIO5 Tx duty control**
9:8	**GPIO4**	GPIO4_TDSEL	**GPIO4 Tx duty control**
7:6	**GPIO3**	GPIO3_TDSEL	**GPIO3 Tx duty control**
5:4	**GPIO2**	GPIO2_TDSEL	**GPIO2 Tx duty control**
3:2	**GPIO1**	GPIO1_TDSEL	**GPIO1 Tx duty control**
1:0	**GPIO0**	GPIO0_TDSEL	**GPIO0 Tx duty control**

A2020D04 GPIO_TDSEL0_SET GPIO TDSEL Control 00000000

Bit	31	30	29	28	27	26	25	24	23	22	21	20	19	18	17	16
Name	GPIO15		GPIO14		GPIO13		GPIO12		GPIO11		GPIO10		GPIO9		GPIO8	
Type	WO		WO		WO		WO		WO		WO		WO		WO	
Reset	0	0	0	0	0	0	0	0	0	0	0	0	0	0	0	0
Bit	15	14	13	12	11	10	9	8	7	6	5	4	3	2	1	0
Name	GPIO7		GPIO6		GPIO5		GPIO4		GPIO3		GPIO2		GPIO1		GPIO0	
Type	WO		WO		WO		WO		WO		WO		WO		WO	
Reset	0	0	0	0	0	0	0	0	0	0	0	0	0	0	0	0

Overview For bitwise access of GPIO_TDSEL

Bit(s)	Mnemonic	Name	Description
31:30	**GPIO15**	GPIO15_TDSEL	**Bitwise SET operation of GPIO15_TDSEL Tx duty control** 0: Keep 1: SET bits
29:28	**GPIO14**	GPIO14_TDSEL	**Bitwise SET operation of GPIO14_TDSEL Tx duty control** 0: Keep 1: SET bits
27:26	**GPIO13**	GPIO13_TDSEL	**Bitwise SET operation of GPIO13_TDSEL Tx duty control** 0: Keep 1: SET bits
25:24	**GPIO12**	GPIO12_TDSEL	**Bitwise SET operation of GPIO12_TDSEL Tx duty control** 0: Keep 1: SET bits
23:22	**GPIO11**	GPIO11_TDSEL	**Bitwise SET operation of GPIO11_TDSEL Tx duty control** 0: Keep 1: SET bits
21:20	**GPIO10**	GPIO10_TDSEL	**Bitwise SET operation of GPIO10_TDSEL Tx duty control** 0: Keep 1: SET bits
19:18	**GPIO9**	GPIO9_TDSEL	**Bitwise SET operation of GPIO9_TDSEL Tx duty control** 0: Keep 1: SET bits
17:16	**GPIO8**	GPIO8_TDSEL	**Bitwise SET operation of GPIO8_TDSEL Tx duty control** 0: Keep 1: SET bits
15:14	**GPIO7**	GPIO7_TDSEL	**Bitwise SET operation of GPIO7_TDSEL Tx duty control** 0: Keep 1: SET bits
13:12	**GPIO6**	GPIO6_TDSEL	**Bitwise SET operation of GPIO6_TDSEL Tx duty control** 0: Keep 1: SET bits

© 2015 - 2017 MediaTek Inc.

This document contains information that is proprietary to MediaTek Inc. (“MediaTek”) and/or its licensor(s).
Any unauthorized use, reproduction or disclosure of this document in whole or in part is strictly prohibited.

Bit(s)	Mnemonic	Name	Description
11:10	**GPIO5**	GPIO5_TDSEL	**Bitwise SET operation of GPIO5_TDSEL Tx duty control** 0: Keep 1: SET bits
9:8	**GPIO4**	GPIO4_TDSEL	**Bitwise SET operation of GPIO4_TDSEL Tx duty control** 0: Keep 1: SET bits
7:6	**GPIO3**	GPIO3_TDSEL	**Bitwise SET operation of GPIO3_TDSEL Tx duty control** 0: Keep 1: SET bits
5:4	**GPIO2**	GPIO2_TDSEL	**Bitwise SET operation of GPIO2_TDSEL Tx duty control** 0: Keep 1: SET bits
3:2	**GPIO1**	GPIO1_TDSEL	**Bitwise SET operation of GPIO1_TDSEL Tx duty control** 0: Keep 1: SET bits
1:0	**GPIO0**	GPIO0_TDSEL	**Bitwise SET operation of GPIO0_TDSEL Tx duty control** 0: Keep 1: SET bits

A2020D08 GPIO_TDSEL0_CLR GPIO TDSEL Control 00000000

Bit	31	30	29	28	27	26	25	24	23	22	21	20	19	18	17	16
Name	GPIO15		GPIO14		GPIO13		GPIO12		GPIO11		GPIO10		GPIO9		GPIO8	
Type	WO		WO		WO		WO		WO		WO		WO		WO	
Reset	0	0	0	0	0	0	0	0	0	0	0	0	0	0	0	0
Bit	15	14	13	12	11	10	9	8	7	6	5	4	3	2	1	0
Name	GPIO7		GPIO6		GPIO5		GPIO4		GPIO3		GPIO2		GPIO1		GPIO0	
Type	WO		WO		WO		WO		WO		WO		WO		WO	
Reset	0	0	0	0	0	0	0	0	0	0	0	0	0	0	0	0

Overview For bitwise access of GPIO_TDSEL

Bit(s)	Mnemonic	Name	Description
31:30	**GPIO15**	GPIO15_TDSEL	**Bitwise CLR operation of GPIO15_TDSEL Tx duty control** 0: Keep 1: CLR bits
29:28	**GPIO14**	GPIO14_TDSEL	**Bitwise CLR operation of GPIO14_TDSEL Tx duty control** 0: Keep 1: CLR bits
27:26	**GPIO13**	GPIO13_TDSEL	**Bitwise CLR operation of GPIO13_TDSEL Tx duty control** 0: Keep 1: CLR bits
25:24	**GPIO12**	GPIO12_TDSEL	**Bitwise CLR operation of GPIO12_TDSEL Tx duty control** 0: Keep 1: CLR bits
23:22	**GPIO11**	GPIO11_TDSEL	**Bitwise CLR operation of GPIO11_TDSEL Tx duty control** 0: Keep 1: CLR bits
21:20	**GPIO10**	GPIO10_TDSEL	**Bitwise CLR operation of GPIO10_TDSEL Tx duty control** 0: Keep 1: CLR bits
19:18	**GPIO9**	GPIO9_TDSEL	**Bitwise CLR operation of GPIO9_TDSEL Tx duty control** 0: Keep

© 2015 - 2017 MediaTek Inc.

This document contains information that is proprietary to MediaTek Inc. (“MediaTek”) and/or its licensor(s).
Any unauthorized use, reproduction or disclosure of this document in whole or in part is strictly prohibited.

Bit(s)	Mnemonic	Name	Description
			1: CLR bits
17:16	**GPIO8**	GPIO8_TDSEL	**Bitwise CLR operation of GPIO8_TDSEL Tx duty control** 0: Keep 1: CLR bits
15:14	**GPIO7**	GPIO7_TDSEL	**Bitwise CLR operation of GPIO7_TDSEL Tx duty control** 0: Keep 1: CLR bits
13:12	**GPIO6**	GPIO6_TDSEL	**Bitwise CLR operation of GPIO6_TDSEL Tx duty control** 0: Keep 1: CLR bits
11:10	**GPIO5**	GPIO5_TDSEL	**Bitwise CLR operation of GPIO5_TDSEL Tx duty control** 0: Keep 1: CLR bits
9:8	**GPIO4**	GPIO4_TDSEL	**Bitwise CLR operation of GPIO4_TDSEL Tx duty control** 0: Keep 1: CLR bits
7:6	**GPIO3**	GPIO3_TDSEL	**Bitwise CLR operation of GPIO3_TDSEL Tx duty control** 0: Keep 1: CLR bits
5:4	**GPIO2**	GPIO2_TDSEL	**Bitwise CLR operation of GPIO2_TDSEL Tx duty control** 0: Keep 1: CLR bits
3:2	**GPIO1**	GPIO1_TDSEL	**Bitwise CLR operation of GPIO1_TDSEL Tx duty control** 0: Keep 1: CLR bits
1:0	**GPIO0**	GPIO0_TDSEL	**Bitwise CLR operation of GPIO0_TDSEL Tx duty control** 0: Keep 1: CLR bits

A2020D10 GPIO_TDSEL1 GPIO TDSEL Control 00000000

Bit	31	30	29	28	27	26	25	24	23	22	21	20	19	18	17	16
Name	GPIO31		GPIO30		GPIO29		GPIO28		GPIO27		GPIO26		GPIO25		GPIO24	
Type	RW		RW		RW		RW		RW		RW		RW		RW	
Reset	0	0	0	0	0	0	0	0	0	0	0	0	0	0	0	0
Bit	15	14	13	12	11	10	9	8	7	6	5	4	3	2	1	0
Name	GPIO23		GPIO22		GPIO21		GPIO20		GPIO19		GPIO18		GPIO17		GPIO16	
Type	RW		RW		RW		RW		RW		RW		RW		RW	
Reset	0	0	0	0	0	0	0	0	0	0	0	0	0	0	0	0

Overview GPIO TX duty control register

Bit(s)	Mnemonic	Name	Description
31:30	**GPIO31**	GPIO31_TDSEL	**GPIO31 Tx duty control**
29:28	**GPIO30**	GPIO30_TDSEL	**GPIO30 Tx duty control**
27:26	**GPIO29**	GPIO29_TDSEL	**GPIO29 Tx duty control**
25:24	**GPIO28**	GPIO28_TDSEL	**GPIO28 Tx duty control**
23:22	**GPIO27**	GPIO27_TDSEL	**GPIO27 Tx duty control**
21:20	**GPIO26**	GPIO26_TDSEL	**GPIO26 Tx duty control**
19:18	**GPIO25**	GPIO25_TDSEL	**GPIO25 Tx duty control**
17:16	**GPIO24**	GPIO24_TDSEL	**GPIO24 Tx duty control**
15:14	**GPIO23**	GPIO23_TDSEL	**GPIO23 Tx duty control**

© 2015 - 2017 MediaTek Inc.

This document contains information that is proprietary to MediaTek Inc. ("MediaTek") and/or its licensor(s).
Any unauthorized use, reproduction or disclosure of this document in whole or in part is strictly prohibited.

Bit(s)	Mnemonic	Name	Description
13:12	**GPIO22**	GPIO22_TDSEL	**GPIO22 Tx duty control**
11:10	**GPIO21**	GPIO21_TDSEL	**GPIO21 Tx duty control**
9:8	**GPIO20**	GPIO20_TDSEL	**GPIO20 Tx duty control**
7:6	**GPIO19**	GPIO19_TDSEL	**GPIO19 Tx duty control**
5:4	**GPIO18**	GPIO18_TDSEL	**GPIO18 Tx duty control**
3:2	**GPIO17**	GPIO17_TDSEL	**GPIO17 Tx duty control**
1:0	**GPIO16**	GPIO16_TDSEL	**GPIO16 Tx duty control**

A2020D14 GPIO_TDSEL1_SET GPIO TDSEL Control 00000000

Bit	31	30	29	28	27	26	25	24	23	22	21	20	19	18	17	16
Name	GPIO31		GPIO30		GPIO29		GPIO28		GPIO27		GPIO26		GPIO25		GPIO24	
Type	WO		WO		WO		WO		WO		WO		WO		WO	
Reset	0	0	0	0	0	0	0	0	0	0	0	0	0	0	0	0
Bit	15	14	13	12	11	10	9	8	7	6	5	4	3	2	1	0
Name	GPIO23		GPIO22		GPIO21		GPIO20		GPIO19		GPIO18		GPIO17		GPIO16	
Type	WO		WO		WO		WO		WO		WO		WO		WO	
Reset	0	0	0	0	0	0	0	0	0	0	0	0	0	0	0	0

Overview For bitwise access of GPIO_TDSEL

Bit(s)	Mnemonic	Name	Description
31:30	**GPIO31**	GPIO31_TDSEL	**Bitwise SET operation of GPIO31_TDSEL Tx duty control** 0: Keep 1: SET bits
29:28	**GPIO30**	GPIO30_TDSEL	**Bitwise SET operation of GPIO30_TDSEL Tx duty control** 0: Keep 1: SET bits
27:26	**GPIO29**	GPIO29_TDSEL	**Bitwise SET operation of GPIO29_TDSEL Tx duty control** 0: Keep 1: SET bits
25:24	**GPIO28**	GPIO28_TDSEL	**Bitwise SET operation of GPIO28_TDSEL Tx duty control** 0: Keep 1: SET bits
23:22	**GPIO27**	GPIO27_TDSEL	**Bitwise SET operation of GPIO27_TDSEL Tx duty control** 0: Keep 1: SET bits
21:20	**GPIO26**	GPIO26_TDSEL	**Bitwise SET operation of GPIO26_TDSEL Tx duty control** 0: Keep 1: SET bits
19:18	**GPIO25**	GPIO25_TDSEL	**Bitwise SET operation of GPIO25_TDSEL Tx duty control** 0: Keep 1: SET bits
17:16	**GPIO24**	GPIO24_TDSEL	**Bitwise SET operation of GPIO24_TDSEL Tx duty control** 0: Keep 1: SET bits
15:14	**GPIO23**	GPIO23_TDSEL	**Bitwise SET operation of GPIO23_TDSEL Tx duty control** 0: Keep 1: SET bits
13:12	**GPIO22**	GPIO22_TDSEL	**Bitwise SET operation of GPIO22_TDSEL Tx duty control** 0: Keep 1: SET bits

© 2015 - 2017 MediaTek Inc.

This document contains information that is proprietary to MediaTek Inc. ("MediaTek") and/or its licensor(s).
Any unauthorized use, reproduction or disclosure of this document in whole or in part is strictly prohibited.

Bit(s)	Mnemonic	Name	Description
11:10	**GPIO21**	GPIO21_TDSEL	**Bitwise SET operation of GPIO21_TDSEL Tx duty control** 0: Keep 1: SET bits
9:8	**GPIO20**	GPIO20_TDSEL	**Bitwise SET operation of GPIO20_TDSEL Tx duty control** 0: Keep 1: SET bits
7:6	**GPIO19**	GPIO19_TDSEL	**Bitwise SET operation of GPIO19_TDSEL Tx duty control** 0: Keep 1: SET bits
5:4	**GPIO18**	GPIO18_TDSEL	**Bitwise SET operation of GPIO18_TDSEL Tx duty control** 0: Keep 1: SET bits
3:2	**GPIO17**	GPIO17_TDSEL	**Bitwise SET operation of GPIO17_TDSEL Tx duty control** 0: Keep 1: SET bits
1:0	**GPIO16**	GPIO16_TDSEL	**Bitwise SET operation of GPIO16_TDSEL Tx duty control** 0: Keep 1: SET bits

A2020D18 GPIO_TDSEL1_CLR GPIO TDSEL Control 00000000

Bit	31	30	29	28	27	26	25	24	23	22	21	20	19	18	17	16
Name	GPIO31		GPIO30		GPIO29		GPIO28		GPIO27		GPIO26		GPIO25		GPIO24	
Type	WO		WO		WO		WO		WO		WO		WO		WO	
Reset	0	0	0	0	0	0	0	0	0	0	0	0	0	0	0	0
Bit	15	14	13	12	11	10	9	8	7	6	5	4	3	2	1	0
Name	GPIO23		GPIO22		GPIO21		GPIO20		GPIO19		GPIO18		GPIO17		GPIO16	
Type	WO		WO		WO		WO		WO		WO		WO		WO	
Reset	0	0	0	0	0	0	0	0	0	0	0	0	0	0	0	0

Overview For bitwise access of GPIO_TDSEL

Bit(s)	Mnemonic	Name	Description
31:30	**GPIO31**	GPIO31_TDSEL	**Bitwise CLR operation of GPIO31_TDSEL Tx duty control** 0: Keep 1: CLR bits
29:28	**GPIO30**	GPIO30_TDSEL	**Bitwise CLR operation of GPIO30_TDSEL Tx duty control** 0: Keep 1: CLR bits
27:26	**GPIO29**	GPIO29_TDSEL	**Bitwise CLR operation of GPIO29_TDSEL Tx duty control** 0: Keep 1: CLR bits
25:24	**GPIO28**	GPIO28_TDSEL	**Bitwise CLR operation of GPIO28_TDSEL Tx duty control** 0: Keep 1: CLR bits
23:22	**GPIO27**	GPIO27_TDSEL	**Bitwise CLR operation of GPIO27_TDSEL Tx duty control** 0: Keep 1: CLR bits
21:20	**GPIO26**	GPIO26_TDSEL	**Bitwise CLR operation of GPIO26_TDSEL Tx duty control** 0: Keep 1: CLR bits
19:18	**GPIO25**	GPIO25_TDSEL	**Bitwise CLR operation of GPIO25_TDSEL Tx duty control** 0: Keep

© 2015 - 2017 MediaTek Inc.

This document contains information that is proprietary to MediaTek Inc. ("MediaTek") and/or its licensor(s).
Any unauthorized use, reproduction or disclosure of this document in whole or in part is strictly prohibited.

Bit(s)	Mnemonic	Name	Description
			1: CLR bits
17:16	**GPIO24**	GPIO24_TDSEL	**Bitwise CLR operation of GPIO24_TDSEL Tx duty control** 0: Keep 1: CLR bits
15:14	**GPIO23**	GPIO23_TDSEL	**Bitwise CLR operation of GPIO23_TDSEL Tx duty control** 0: Keep 1: CLR bits
13:12	**GPIO22**	GPIO22_TDSEL	**Bitwise CLR operation of GPIO22_TDSEL Tx duty control** 0: Keep 1: CLR bits
11:10	**GPIO21**	GPIO21_TDSEL	**Bitwise CLR operation of GPIO21_TDSEL Tx duty control** 0: Keep 1: CLR bits
9:8	**GPIO20**	GPIO20_TDSEL	**Bitwise CLR operation of GPIO20_TDSEL Tx duty control** 0: Keep 1: CLR bits
7:6	**GPIO19**	GPIO19_TDSEL	**Bitwise CLR operation of GPIO19_TDSEL Tx duty control** 0: Keep 1: CLR bits
5:4	**GPIO18**	GPIO18_TDSEL	**Bitwise CLR operation of GPIO18_TDSEL Tx duty control** 0: Keep 1: CLR bits
3:2	**GPIO17**	GPIO17_TDSEL	**Bitwise CLR operation of GPIO17_TDSEL Tx duty control** 0: Keep 1: CLR bits
1:0	**GPIO16**	GPIO16_TDSEL	**Bitwise CLR operation of GPIO16_TDSEL Tx duty control** 0: Keep 1: CLR bits

A2020D20 GPIO_TDSEL2 GPIO TDSEL Control 00000000

Bit	31	30	29	28	27	26	25	24	23	22	21	20	19	18	17	16
Name	GPIO47		GPIO46		GPIO45		GPIO44		GPIO43		GPIO42		GPIO41		GPIO40	
Type	RW		RW		RW		RW		RW		RW		RW		RW	
Reset	0	0	0	0	0	0	0	0	0	0	0	0	0	0	0	0
Bit	15	14	13	12	11	10	9	8	7	6	5	4	3	2	1	0
Name	GPIO39		GPIO38		GPIO37		GPIO36		GPIO35		GPIO34		GPIO33		GPIO32	
Type	RW		RW		RW		RW		RW		RW		RW		RW	
Reset	0	0	0	0	0	0	0	0	0	0	0	0	0	0	0	0

Overview GPIO TX duty control register

Bit(s)	Mnemonic	Name	Description
31:30	**GPIO47**	GPIO47_TDSEL	**GPIO47 Tx duty control**
29:28	**GPIO46**	GPIO46_TDSEL	**GPIO46 Tx duty control**
27:26	**GPIO45**	GPIO45_TDSEL	**GPIO45 Tx duty control**
25:24	**GPIO44**	GPIO44_TDSEL	**GPIO44 Tx duty control**
23:22	**GPIO43**	GPIO43_TDSEL	**GPIO43 Tx duty control**
21:20	**GPIO42**	GPIO42_TDSEL	**GPIO42 Tx duty control**
19:18	**GPIO41**	GPIO41_TDSEL	**GPIO41 Tx duty control**
17:16	**GPIO40**	GPIO40_TDSEL	**GPIO40 Tx duty control**
15:14	**GPIO39**	GPIO39_TDSEL	**GPIO39 Tx duty control**

© 2015 - 2017 MediaTek Inc.

This document contains information that is proprietary to MediaTek Inc. (“MediaTek”) and/or its licensor(s).
Any unauthorized use, reproduction or disclosure of this document in whole or in part is strictly prohibited.

Bit(s)	Mnemonic	Name	Description
13:12	**GPIO38**	GPIO38_TDSEL	**GPIO38 Tx duty control**
11:10	**GPIO37**	GPIO37_TDSEL	**GPIO37 Tx duty control**
9:8	**GPIO36**	GPIO36_TDSEL	**GPIO36 Tx duty control**
7:6	**GPIO35**	GPIO35_TDSEL	**GPIO35 Tx duty control**
5:4	**GPIO34**	GPIO34_TDSEL	**GPIO34 Tx duty control**
3:2	**GPIO33**	GPIO33_TDSEL	**GPIO33 Tx duty control**
1:0	**GPIO32**	GPIO32_TDSEL	**GPIO32 Tx duty control**

A2020D24 **GPIO_TDSEL2_SET** **GPIO TDSEL Control** **00000000**

Bit	31	30	29	28	27	26	25	24	23	22	21	20	19	18	17	16
Name	GPIO47		GPIO46		GPIO45		GPIO44		GPIO43		GPIO42		GPIO41		GPIO40	
Type	WO		WO		WO		WO		WO		WO		WO		WO	
Reset	0	0	0	0	0	0	0	0	0	0	0	0	0	0	0	0
Bit	15	14	13	12	11	10	9	8	7	6	5	4	3	2	1	0
Name	GPIO39		GPIO38		GPIO37		GPIO36		GPIO35		GPIO34		GPIO33		GPIO32	
Type	WO		WO		WO		WO		WO		WO		WO		WO	
Reset	0	0	0	0	0	0	0	0	0	0	0	0	0	0	0	0

Overview For bitwise access of GPIO_TDSEL

Bit(s)	Mnemonic	Name	Description
31:30	**GPIO47**	GPIO47_TDSEL	**Bitwise SET operation of GPIO47_TDSEL Tx duty control** 0: Keep 1: SET bits
29:28	**GPIO46**	GPIO46_TDSEL	**Bitwise SET operation of GPIO46_TDSEL Tx duty control** 0: Keep 1: SET bits
27:26	**GPIO45**	GPIO45_TDSEL	**Bitwise SET operation of GPIO45_TDSEL Tx duty control** 0: Keep 1: SET bits
25:24	**GPIO44**	GPIO44_TDSEL	**Bitwise SET operation of GPIO44_TDSEL Tx duty control** 0: Keep 1: SET bits
23:22	**GPIO43**	GPIO43_TDSEL	**Bitwise SET operation of GPIO43_TDSEL Tx duty control** 0: Keep 1: SET bits
21:20	**GPIO42**	GPIO42_TDSEL	**Bitwise SET operation of GPIO42_TDSEL Tx duty control** 0: Keep 1: SET bits
19:18	**GPIO41**	GPIO41_TDSEL	**Bitwise SET operation of GPIO41_TDSEL Tx duty control** 0: Keep 1: SET bits
17:16	**GPIO40**	GPIO40_TDSEL	**Bitwise SET operation of GPIO40_TDSEL Tx duty control** 0: Keep 1: SET bits
15:14	**GPIO39**	GPIO39_TDSEL	**Bitwise SET operation of GPIO39_TDSEL Tx duty control** 0: Keep 1: SET bits
13:12	**GPIO38**	GPIO38_TDSEL	**Bitwise SET operation of GPIO38_TDSEL Tx duty control** 0: Keep 1: SET bits

© 2015 - 2017 MediaTek Inc.

This document contains information that is proprietary to MediaTek Inc. ("MediaTek") and/or its licensor(s).
Any unauthorized use, reproduction or disclosure of this document in whole or in part is strictly prohibited.

Bit(s)	Mnemonic	Name	Description
11:10	**GPIO37**	GPIO37_TDSEL	**Bitwise SET operation of GPIO37_TDSEL Tx duty control** 0: Keep 1: SET bits
9:8	**GPIO36**	GPIO36_TDSEL	**Bitwise SET operation of GPIO36_TDSEL Tx duty control** 0: Keep 1: SET bits
7:6	**GPIO35**	GPIO35_TDSEL	**Bitwise SET operation of GPIO35_TDSEL Tx duty control** 0: Keep 1: SET bits
5:4	**GPIO34**	GPIO34_TDSEL	**Bitwise SET operation of GPIO34_TDSEL Tx duty control** 0: Keep 1: SET bits
3:2	**GPIO33**	GPIO33_TDSEL	**Bitwise SET operation of GPIO33_TDSEL Tx duty control** 0: Keep 1: SET bits
1:0	**GPIO32**	GPIO32_TDSEL	**Bitwise SET operation of GPIO32_TDSEL Tx duty control** 0: Keep 1: SET bits

A2020D28 GPIO_TDSEL2_CLR GPIO TDSEL Control 00000000

Bit	31	30	29	28	27	26	25	24	23	22	21	20	19	18	17	16
Name	GPIO47		GPIO46		GPIO45		GPIO44		GPIO43		GPIO42		GPIO41		GPIO40	
Type	WO		WO		WO		WO		WO		WO		WO		WO	
Reset	0	0	0	0	0	0	0	0	0	0	0	0	0	0	0	0
Bit	15	14	13	12	11	10	9	8	7	6	5	4	3	2	1	0
Name	GPIO39		GPIO38		GPIO37		GPIO36		GPIO35		GPIO34		GPIO33		GPIO32	
Type	WO		WO		WO		WO		WO		WO		WO		WO	
Reset	0	0	0	0	0	0	0	0	0	0	0	0	0	0	0	0

Overview For bitwise access of GPIO_TDSEL

Bit(s)	Mnemonic	Name	Description
31:30	**GPIO47**	GPIO47_TDSEL	**Bitwise CLR operation of GPIO47_TDSEL Tx duty control** 0: Keep 1: CLR bits
29:28	**GPIO46**	GPIO46_TDSEL	**Bitwise CLR operation of GPIO46_TDSEL Tx duty control** 0: Keep 1: CLR bits
27:26	**GPIO45**	GPIO45_TDSEL	**Bitwise CLR operation of GPIO45_TDSEL Tx duty control** 0: Keep 1: CLR bits
25:24	**GPIO44**	GPIO44_TDSEL	**Bitwise CLR operation of GPIO44_TDSEL Tx duty control** 0: Keep 1: CLR bits
23:22	**GPIO43**	GPIO43_TDSEL	**Bitwise CLR operation of GPIO43_TDSEL Tx duty control** 0: Keep 1: CLR bits
21:20	**GPIO42**	GPIO42_TDSEL	**Bitwise CLR operation of GPIO42_TDSEL Tx duty control** 0: Keep 1: CLR bits
19:18	**GPIO41**	GPIO41_TDSEL	**Bitwise CLR operation of GPIO41_TDSEL Tx duty control** 0: Keep

© 2015 - 2017 MediaTek Inc.

This document contains information that is proprietary to MediaTek Inc. (“MediaTek”) and/or its licensor(s).
Any unauthorized use, reproduction or disclosure of this document in whole or in part is strictly prohibited.

Bit(s)	Mnemonic	Name	Description
			1: CLR bits
17:16	**GPIO40**	GPIO40_TDSEL	**Bitwise CLR operation of GPIO40_TDSEL Tx duty control** 0: Keep 1: CLR bits
15:14	**GPIO39**	GPIO39_TDSEL	**Bitwise CLR operation of GPIO39_TDSEL Tx duty control** 0: Keep 1: CLR bits
13:12	**GPIO38**	GPIO38_TDSEL	**Bitwise CLR operation of GPIO38_TDSEL Tx duty control** 0: Keep 1: CLR bits
11:10	**GPIO37**	GPIO37_TDSEL	**Bitwise CLR operation of GPIO37_TDSEL Tx duty control** 0: Keep 1: CLR bits
9:8	**GPIO36**	GPIO36_TDSEL	**Bitwise CLR operation of GPIO36_TDSEL Tx duty control** 0: Keep 1: CLR bits
7:6	**GPIO35**	GPIO35_TDSEL	**Bitwise CLR operation of GPIO35_TDSEL Tx duty control** 0: Keep 1: CLR bits
5:4	**GPIO34**	GPIO34_TDSEL	**Bitwise CLR operation of GPIO34_TDSEL Tx duty control** 0: Keep 1: CLR bits
3:2	**GPIO33**	GPIO33_TDSEL	**Bitwise CLR operation of GPIO33_TDSEL Tx duty control** 0: Keep 1: CLR bits
1:0	**GPIO32**	GPIO32_TDSEL	**Bitwise CLR operation of GPIO32_TDSEL Tx duty control** 0: Keep 1: CLR bits

A2020D30 GPIO_TDSEL3 GPIO TDSEL Control 00000000

Bit	31	30	29	28	27	26	25	24	23	22	21	20	19	18	17	16
Name																
Type																
Reset																
Bit	15	14	13	12	11	10	9	8	7	6	5	4	3	2	1	0
Name															GPIO48	
Type															RW	
Reset															0	0

Overview GPIO TX duty control register

Bit(s)	Mnemonic	Name	Description
1:0	**GPIO48**	GPIO48_TDSEL	**GPIO48 Tx duty control**

A2020D34 GPIO_TDSEL3_SET GPIO TDSEL Control 00000000

Bit	31	30	29	28	27	26	25	24	23	22	21	20	19	18	17	16
Name																
Type																
Reset																
Bit	15	14	13	12	11	10	9	8	7	6	5	4	3	2	1	0
Name															GPIO48	

© 2015 - 2017 MediaTek Inc.

This document contains information that is proprietary to MediaTek Inc. ("MediaTek") and/or its licensor(s).
Any unauthorized use, reproduction or disclosure of this document in whole or in part is strictly prohibited.

Type															WO	
Reset															0	0

Overview For bitwise access of GPIO_TDSEL

Bit(s)	Mnemonic	Name	Description
1:0	**GPIO48**	GPIO48_TDSEL	**Bitwise SET operation of GPIO48_TDSEL Tx duty control** 0: Keep 1: SET bits

A2020D38 GPIO_TDSEL3_CLR GPIO TDSEL Control 00000000

Bit	31	30	29	28	27	26	25	24	23	22	21	20	19	18	17	16
Name																
Type																
Reset																
Bit	15	14	13	12	11	10	9	8	7	6	5	4	3	2	1	0
Name															**GPIO48**	
Type															WO	
Reset															0	0

Overview For bitwise access of GPIO_TDSEL

Bit(s)	Mnemonic	Name	Description
1:0	**GPIO48**	GPIO48_TDSEL	**Bitwise CLR operation of GPIO48_TDSEL Tx duty control** 0: Keep 1: CLR bits

A2020E00 CLK_OUT0 CLK Out Selection Control 00000004

Bit	31	30	29	28	27	26	25	24	23	22	21	20	19	18	17	16
Name																
Type																
Reset																
Bit	15	14	13	12	11	10	9	8	7	6	5	4	3	2	1	0
Name													**CLK_OUT0**			
Type													RW			
Reset													0	1	0	0

Overview CLK OUT0 Setting

Bit(s)	Mnemonic	Name	Description
3:0	**CLK_OUT0**	CFG0	**Selects clock output for CLKO_0** [0]: Reserved [1]: f26m_mcusys_ck [2]: Reserved [3]: Reserved [4]: f32k_mcusys_ck [5]: Reserved [6]: Reserved [7]: Reserved [8]: Reserved [9]: Reserved [10]: Reserved [11]: Reserved [12]: Reserved [13]: Reserved

© 2015 - 2017 MediaTek Inc.

This document contains information that is proprietary to MediaTek Inc. ("MediaTek") and/or its licensor(s).
Any unauthorized use, reproduction or disclosure of this document in whole or in part is strictly prohibited.

Bit(s)	Mnemonic	Name	Description
			[14]: Reserved [15]: Reserved

A2020E10 CLK_OUT1 CLK Out Selection Control 00000004

Bit	31	30	29	28	27	26	25	24	23	22	21	20	19	18	17	16
Name																
Type																
Reset																
Bit	15	14	13	12	11	10	9	8	7	6	5	4	3	2	1	0
Name													CLK_OUT1			
Type													RW			
Reset													0	1	0	0

Overview CLK OUT1 setting

Bit(s)	Mnemonic	Name	Description
3:0	CLK_OUT1	CFG1	**Selects clock output for CLKO_1** [0]: Reserved [1]: f26m_mcusys_ck [2]: Reserved [3]: Reserved [4]: f32k_mcusys_ck [5]: Reserved [6]: Reserved [7]: Reserved [8]: Reserved [9]: Reserved [10]: Reserved [11]: Reserved [12]: Reserved [13]: Reserved [14]: Reserved [15]: Reserved

A2020E20 CLK_OUT2 CLK Out Selection Control 00000004

Bit	31	30	29	28	27	26	25	24	23	22	21	20	19	18	17	16
Name																
Type																
Reset																
Bit	15	14	13	12	11	10	9	8	7	6	5	4	3	2	1	0
Name													CLK_OUT2			
Type													RW			
Reset													0	1	0	0

Overview CLK OUT2 setting

Bit(s)	Mnemonic	Name	Description
3:0	CLK_OUT2	CFG2	**Selects clock output for CLKO_2** [0]: Reserved [1]: f26m_mcusys_ck [2]: Reserved [3]: Reserved [4]: f32k_mcusys_ck [5]: Reserved [6]: Reserved [7]: Reserved

© 2015 - 2017 MediaTek Inc.

This document contains information that is proprietary to MediaTek Inc. ("MediaTek") and/or its licensor(s).
Any unauthorized use, reproduction or disclosure of this document in whole or in part is strictly prohibited.

Bit(s)	Mnemonic	Name	Description
			[8]: Reserved [9]: Reserved [10]: Reserved [11]: Reserved [12]: Reserved [13]: Reserved [14]: Reserved [15]: Reserved

A2020E30 CLK_OUT3 CLK Out Selection Control 00000004

Bit	31	30	29	28	27	26	25	24	23	22	21	20	19	18	17	16
Name																
Type																
Reset																
Bit	15	14	13	12	11	10	9	8	7	6	5	4	3	2	1	0
Name													CLK_OUT3			
Type													RW			
Reset													0	1	0	0

Overview CLK OUT3 setting

Bit(s)	Mnemonic	Name	Description
3:0	**CLK_OUT3**	CFG3	**Selects clock output for CLKO_3** [0]: Reserved [1]: f26m_mcusys_ck [2]: Reserved [3]: Reserved [4]: f32k_mcusys_ck [5]: Reserved [6]: Reserved [7]: Reserved [8]: Reserved [9]: Reserved [10]: Reserved [11]: Reserved [12]: Reserved [13]: Reserved [14]: Reserved [15]: Reserved

A2020E40 CLK_OUT4 CLK Out Selection Control 00000004

Bit	31	30	29	28	27	26	25	24	23	22	21	20	19	18	17	16
Name																
Type																
Reset																
Bit	15	14	13	12	11	10	9	8	7	6	5	4	3	2	1	0
Name													CLK_OUT4			
Type													RW			
Reset													0	1	0	0

Overview CLK OUT4 setting

Bit(s)	Mnemonic	Name	Description
3:0	**CLK_OUT4**	CFG4	**Selects clock output for CLKO_4** [0]: Reserved [1]: f26m_mcusys_ck

© 2015 - 2017 MediaTek Inc.

This document contains information that is proprietary to MediaTek Inc. ("MediaTek") and/or its licensor(s).
Any unauthorized use, reproduction or disclosure of this document in whole or in part is strictly prohibited.

Bit(s)	Mnemonic	Name	Description
			[2]: Reserved [3]: reserved [4]: f32k_mcusys_ck [5]: Reserved [6]: Reserved [7]: Reserved [8]: Reserved [9]: Reserved [10]: Reserved [11]: Reserved [12]: Reserved [13]: Reserved [14]: Reserved [15]: Reserved

A2020E50 CLK_OUT5 CLK Out Selection Control 00000004

Bit	31	30	29	28	27	26	25	24	23	22	21	20	19	18	17	16
Name																
Type																
Reset																
Bit	15	14	13	12	11	10	9	8	7	6	5	4	3	2	1	0
Name													CLK_OUT5			
Type													RW			
Reset													0	1	0	0

Overview CLK OUT5 setting

Bit(s)	Mnemonic	Name	Description
3:0	**CLK_OUT5**	CFG5	**Selects clock output for CLKO_5** [0]: Reserved [1]: f26m_mcusys_ck [2]: Reserved [3]: Reserved [4]: f32k_mcusys_ck [5]: Reserved [6]: Reserved [7]: Reserved [8]: Reserved [9]: Reserved [10]: Reserved [11]: Reserved [12]: Reserved [13]: Reserved [14]: Reserved [15]: Reserved

© 2015 - 2017 MediaTek Inc.

This document contains information that is proprietary to MediaTek Inc. ("MediaTek") and/or its licensor(s).
Any unauthorized use, reproduction or disclosure of this document in whole or in part is strictly prohibited.

30. MT2523 Top Clock Setting

This chapter defines the clock settings for MT2523.

30.1. MT2523 Clock Scheme

This chapter describes the following settings:

- CM4 MCU clock setting
- Peripheral BUS clock setting
- BSI clock setting
- Serial flash clock setting
- DSP clock setting
- DISP PWM clock
- CAM clock setting
- SLCD clock setting
- MSDC0 clock setting
- MSDC1 clock setting

The USB clock's frequency typically cannot be changed and so is not described in this chapter.

© 2015 - 2017 MediaTek Inc.

This document contains information that is proprietary to MediaTek Inc. ("MediaTek") and/or its licensor(s).
Any unauthorized use, reproduction or disclosure of this document in whole or in part is strictly prohibited.

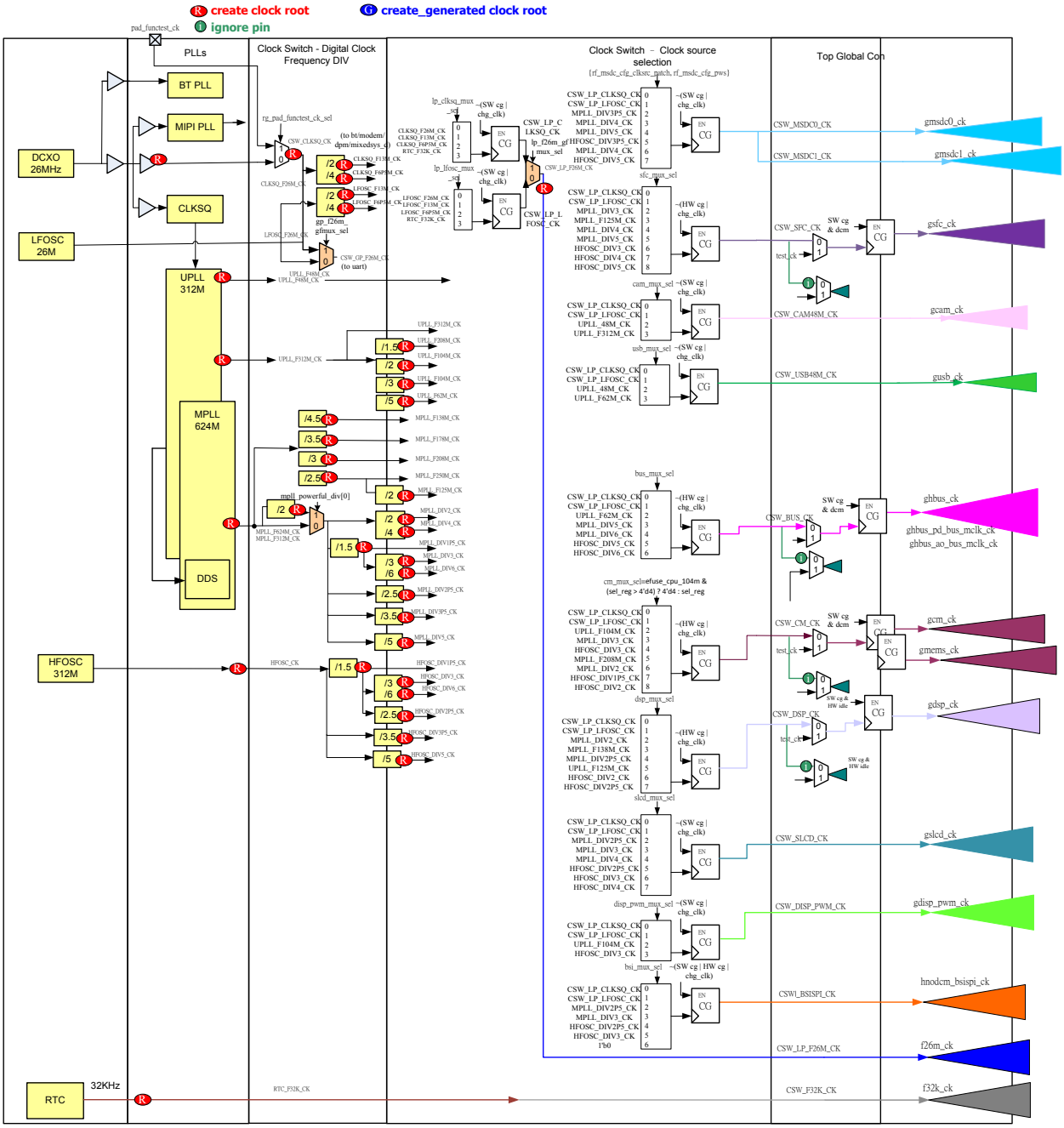

Figure 30-1. MT2523 clock scheme

30.2. Clock Setting Programming Guide

The clock settings of MT2523 are configured by CRs which control some clock dividers and MUXs. This chapter describes how to switch clock source/frequency for MT2523 system and peripheral devices.

Note that all clock sources should be enabled and stable when S/W switches to it. Follow the minimum VCORE voltage limitation, or there will be timing violation issues.

This document contains information that is proprietary to MediaTek Inc. ("MediaTek") and/or its licensor(s).
Any unauthorized use, reproduction or disclosure of this document in whole or in part is strictly prohibited.

30.2.1. General Slow Clock Setting

There are three types of slow clocks, DCXO (CLKSQ) 26M, LFOSC 26M and 32K. CLKSQ 26M and LFOSC 26M are divided into 13M and 6.5M. You can select LFOSC for lower power or CLKSQ for more accuracy. CM4/BUS/SFC default clock is from CSW_LP_CLKSQ_CK; you can switch to CSW_LP_LFOSC_CK or other higher clock frequencies. The clock source of UART 0 ~ 3 is from CSW_GP_F26M_CK. BT and audio 26M clock is from CLKSQ_F26M_CK. Other modules' slow clocks are derived from CSW_LP_F26M_CK, e.g. PWM/GPTIMER/I2C0/I2C1/SPI/SENSOR_DMA.

	Mux select register (active when chg=1)	Mux select option	Powerful divide enable bit works @ *CLK_CONDB (0xA2010104) bit[31]=1	Min. vcore voltage (typ)
CSW_LP_CLKSQ_CK	LP_CLKSQ_MUX_SEL = *CLK_CONDD (0xA201010C) bit[25:24]	0: CLKSQ_F26M_CK (26MHz)	NA	0.9v
		1: CLKSQ_F13M_CK (13MHz)	NA	0.9v
		2: CLKSQ_F6P5M_CK (6.5MHz)	NA	0.9v
		3: RTC_F32K_CK (32kHz)	NA	0.9v

The configured CRs and steps are:

LP_CLKSQ_MUX_SEL : 0xA201010C[25:24]

CHG_LP_CLKSQ =1 : 0xA21D0150[12]

MUX change will succeed when read 0xA21D0150[12] = 0.

	Mux select register (active when chg=1)	Mux select option	Powerful divide enable bit works @ *CLK_CONDB (0xA2010104) bit[31]=1	Min. vcore voltage (typ)
CSW_LP_LFOSC_CK	LP_LFOSC_MUX_SEL = *CLK_CONDD (0xA201010C) bit[23:22]	0: LFOSC_F26M_CK (26MHz)	NA	0.9v
		1: LFOSC_F13M_CK (13MHz)	NA	0.9v
		2: LFOSC_F6P5M_CK (6.5MHz)	NA	0.9v
		3: RTC_F32K_CK (32kHz)	NA	0.9v

© 2015 - 2017 MediaTek Inc.

This document contains information that is proprietary to MediaTek Inc. ("MediaTek") and/or its licensor(s).
Any unauthorized use, reproduction or disclosure of this document in whole or in part is strictly prohibited.

The configured CRs and steps are:

LP_ LFOSC_MUX_SEL : 0xA201010C[23:22]

CHG_LP_LFOSC =1 : 0xA21D0150[13]

MUX change will succeed when read 0xA21D0150[13] = 0.

	Mux select register	Mux select option	Powerful divide enable bit works @ *CLK_CONDB (0xA2010104) bit[31]=1	Min. vcore voltage (typ)
CSW_LP_F26M_CK	LP_F26M_GFMUX_SEL = *CLK_CONDB (0xA2010104) bit[20]	0: CSW_LP_CLKSQ_CK	NA	0.9v
		1: CSW_LP_LFOSC_CK	NA	0.9v

The configured CRs and steps are:

LP_F26M_GFMUX_SEL: 0xA2010104[20]

MUX change will succeed after 2T original clock + 2T target clock.

	Mux select register	Mux select option	Powerful divide enable bit works @ *CLK_CONDB (0xA2010104) bit[31]=1	Min. vcore voltage (typ)
CSW_GP_F26M_CK	GP_F26M_GFMUX_SEL = *CLK_CONDB (0xA2010104) bit[21]	0: CLKSQ_F26M_CK (26MHz)	NA	0.9v
		1: LFOSC_F26M_CK (26MHz)	NA	0.9v

The configured CRs and steps are:

GP_F26M_GFMUX_SEL: 0xA2010104[21]

MUX change will succeed after 2T original clock + 2T target clock.

30.2.2. CM4 MCU Clock Setting

The CM4 MCU clock supports slow clock, 104MHz and max. 208MHz (divided from PLL). CM4 MCU clock is CM4 CPU clock. CM4 and EMI/SFC/MM AHB BUS (MEMS) clock are derived from CM4 MCU clock and equals half of CM4 MCU clock frequency. EMI needs 50/50 duty clock, so none of 50/50 duty clock source is forbidden with pSRAM scenario.

© 2015 - 2017 MediaTek Inc.

This document contains information that is proprietary to MediaTek Inc. (“MediaTek”) and/or its licensor(s).
Any unauthorized use, reproduction or disclosure of this document in whole or in part is strictly prohibited.

	Change bit (gating when chg, auto clear)	Mux select register (active when chg=1)	Mux select option	Powerful divide enable bit works @ *CLK_CONDB (0xA2010104) bit[31]=1	Min. vcore voltage (typ)
CSW_CM_CK	CHG_CM = *ACFG_CLK_UPDATE (0XA21D0150) BIT[1]	CM_MUX_SEL = *CLK_CONDB (0xA2010104) bit[6:3]	0: CSW_LP_CLKSQ_CK (max. 26MHz)	NA	0.9v
			1: CSW_LP_LFOSC_CK (max. 26MHz)	NA	0.9v
			2: UPLL_F104M_CK (104MHz)	*CLK_CONDA (0xA2010100) bit[8+1]=1	1.1v
			3: MPLL_DIV3_CK (104MHz)	*CLK_CONDA (0xA2010100) bit[16]=1 *CLK_CONDA (0xA2010100) bit[16+4]=1 *CLK_CONDA (0xA2010100) bit[16+7]=1	1.1v
			4: HFOSC_DIV3_CK (104MHz)	*CLK_CONDA (0xA2010100) bit[0]=1 *CLK_CONDA (0xA2010100) bit[3]=1	1.1v
			5: MPLL_F208M_CK (208MHz)	*CLK_CONDA (0xA2010100) bit[16+2]=1	1.3v
			6: MPLL_DIV2_CK (156MHz)	*CLK_CONDA (0xA2010100) bit[16]=1 *CLK_CONDA (0xA2010100) bit[16+5]=1	1.3v
			7: HFOSC_DIV1P5_CK (none 50/50 duty, forbidden)	*CLK_CONDA (0xA2010100) bit[0]=1	NA
			8: HFOSC_DIV2_CK (156MHz)	*CLK_CONDA (0xA2010100) bit[1]=1	1.3v

The configured CRs and steps are:

© 2015 - 2017 MediaTek Inc.

This document contains information that is proprietary to MediaTek Inc. (“MediaTek”) and/or its licensor(s).
Any unauthorized use, reproduction or disclosure of this document in whole or in part is strictly prohibited.

POWERFUL_DIV_EN : 0xA2010100[31:0]

PLL_DIV_EN=1 : 0xA2010104[31]

CM_MUX_SEL : 0xA2010104[6:3]

CHG_CM =1 : 0xA21D0150[1]

MUX change will succeed when read 0xA21D0150[1] = 0.

30.2.3. Peripheral BUS Clock Setting

The Peripheral BUS clock supports slow clock, 52MHz and max. 62.4MHz. Peripheral BUS clock is for peripheral I2C_D2D/I2C2/DMA/DMA_AO/SPISLV clock and general BUS clock. Peripheral BUS clock can only run at max. 13MHz in 0.9v. Therefore, setting up BUS DCM signal "RG_BUS_FREE_FSEL" to derive 13MHz clock from 26MHz is required. Refer to clock API for the setup method.

	Change bit (gating when chg, auto clear)	Mux select register (active when chg=1)	Mux select option	Powerful divide enable bit works @ *CLK_CONDB (0xA2010104) bit[31]=1	Min. vcore voltage (typ)
CSW_BUS_CK	CHG_BUS = *ACFG_CLK_UPDATE (0XA21D0150) BIT[0]	BUS_MUX_SEL = *CLK_CONDB (0xA2010104) bit[2:0]	0: CSW_LP_CLKSQ_CK (max. 26MHz)	NA	0.9v
			1: CSW_LP_LFOSC_CK (max. 26MHz)	NA	0.9v
			2: UPLL_F62M_CK (62.4MHz)	*CLK_CONDA (0xA2010100) bit[8+3]=1	1.1v
			3: MPLL_DIV5_CK (62.4MHz)	*CLK_CONDA (0xA2010100) bit[16]=1 *CLK_CONDA (0xA2010100) bit[16+9]=1	1.1v
			4: MPLL_DIV6_CK (52MHz)	*CLK_CONDA (0xA2010100) bit[16]=1 *CLK_CONDA (0xA2010100) bit[16+4]=1 *CLK_CONDA (0xA2010100) bit[16+7]=1	1.1v
			5: HFOSC_DIV5_CK (62.4MHz)	*CLK_CONDA (0xA2010100) bit[5]=1	1.1v

© 2015 - 2017 MediaTek Inc.

This document contains information that is proprietary to MediaTek Inc. ("MediaTek") and/or its licensor(s).
Any unauthorized use, reproduction or disclosure of this document in whole or in part is strictly prohibited.

	Change bit (gating when chg, auto clear)	Mux select register (active when chg=1)	Mux select option	Powerful divide enable bit works @ *CLK_CONDB (0xA2010104) bit[31]=1	Min. vcore voltage (typ)
			6: HFOSC_DIV6_CK (52MHz)	*CLK_CONDA (0xA2010100) bit[0]=1 *CLK_CONDA (0xA2010100) bit[3]=1	1.1v

The configured CRs and steps are:

POWERFUL_DIV_EN : 0xA2010100[31:0]

PLL_DIV_EN=1 : 0xA2010104[31]

BUS_MUX_SEL : 0xA2010104[2:0]

CHG_BUS =1 : 0xA21D0150[0]

MUX change will succeed when read 0xA21D0150[0] = 0.

30.2.4. BSI BUS Clock Setting

The BSI clock supports slow clock, 104MHz and max. 124.8MHz. BSI clock is for DCXO configuration BSI interface. BSI clock frequency should be bigger than or equal to twice of Peripheral BUS clock.

	Change bit (gating when chg, auto clear)	Mux select register (active when chg=1)	Mux select option	Powerful divide enable bit works @ *CLK_CONDB (0xA2010104) bit[31]=1	Min. vcore voltage (typ)
CSW_BSI_CK	CHG_BSI = *ACFG_CLK_UPDATE (0XA21D0150) BIT[5]	BSI_MUX_SEL = *CLK_CONDB (0xA2010104) bit[19:17]	0: CSW_LP_CLKSQ_CK (max. 26MHz)	NA	0.9v
			1: CSW_LP_LFOSC_CK (max. 26MHz)	NA	0.9v
			2: MPLL_DIV2P5_CK (none 50/50 duty 124.8MHz)	*CLK_CONDA (0xA2010100) bit[16]=1 *CLK_CONDA (0xA2010100) bit[16+6]=1	1.1v

© 2015 - 2017 MediaTek Inc.

This document contains information that is proprietary to MediaTek Inc. (“MediaTek”) and/or its licensor(s).
Any unauthorized use, reproduction or disclosure of this document in whole or in part is strictly prohibited.

	Change bit (gating when chg, auto clear)	Mux select register (active when chg=1)	Mux select option	Powerful divide enable bit works @ *CLK_CONDB (0xA2010104) bit[31]=1	Min. vcore voltage (typ)
			3: MPLL_DIV3_CK (104MHz)	*CLK_CONDA (0xA2010100) bit[16]=1 *CLK_CONDA (0xA2010100) bit[16+4]=1 *CLK_CONDA (0xA2010100) bit[16+7]=1	1.1v
			4: HFOSC_DIV2P5_CK (none 50/50 duty 124.8MHz)	*CLK_CONDA (0xA2010100) bit[2]=1	1.1v
			5: HFOSC_DIV3_CK (104MHz)	*CLK_CONDA (0xA2010100) bit[0]=1 *CLK_CONDA (0xA2010100) bit[3]=1	1.1v

The configured CRs and steps are:

POWERFUL_DIV_EN : 0xA2010100[31:0]

PLL_DIV_EN=1 : 0xA2010104[31]

BSI_MUX_SEL : 0xA2010104[19:17]

RG_BSICSW_FORCE_ON=1 : 0xA201010C[5]

CHG_BSI =1 : 0xA21D0150[5]

MUX change will succeed when read 0xA21D0150[5] = 0.

RG_BSICSW_FORCE_ON=0 : 0xA201010C[5]

© 2015 - 2017 MediaTek Inc.

This document contains information that is proprietary to MediaTek Inc. (“MediaTek”) and/or its licensor(s).
Any unauthorized use, reproduction or disclosure of this document in whole or in part is strictly prohibited.

30.2.5. Serial Flash Clock Setting

The serial flash clock supports slow clock, 62.4MHz and max. 78MHz.

	Change bit (gating when chg, auto clear)	Mux select register (active when chg=1)	Mux select option	Powerful divide enable bit works @ *CLK_CONDB (0xA2010104) bit[31]=1	Min. vcore voltage (typ)
CSW_SFC_CK	CHG_SFC = *ACFG_CLK_UPDATE (0XA21D0150) BIT[3]	SFC_MUX_SEL = *CLK_CONDB (0xA2010104) bit[13:10]	0: CSW_LP_CLKSQ_CK (max. 26MHz)	NA	0.9v
			1: CSW_LP_LFOSC_CK (max. 26MHz)	NA	0.9v
			2: MPLL_DIV3_CK (104MHz, forbidden)	*CLK_CONDA (0xA2010100) bit[16]=1 *CLK_CONDA (0xA2010100) bit[16+4]=1 *CLK_CONDA (0xA2010100) bit[16+7]=1	NA
			3: MPLL_F125M_CK (124.8MHz, forbidden)	*CLK_CONDA (0xA2010100) bit[16]=1 *CLK_CONDA (0xA2010100) bit[16+3]=1	NA
			4: MPLL_DIV4_CK (78MHz)	*CLK_CONDA (0xA2010100) bit[16]=1 *CLK_CONDA (0xA2010100) bit[16+5]=1	1.1v
			5: MPLL_DIV5_CK (62.4MHz)	*CLK_CONDA (0xA2010100) bit[16]=1 *CLK_CONDA (0xA2010100) bit[16+9]=1	1.1v
			6: HFOSC_DIV3_CK (104MHz, forbidden)	*CLK_CONDA (0xA2010100) bit[0]=1 *CLK_CONDA (0xA2010100) bit[3]=1	NA

© 2015 - 2017 MediaTek Inc.

This document contains information that is proprietary to MediaTek Inc. (“MediaTek”) and/or its licensor(s).
Any unauthorized use, reproduction or disclosure of this document in whole or in part is strictly prohibited.

	Change bit (gating when chg, auto clear)	Mux select register (active when chg=1)	Mux select option	Powerful divide enable bit works @ *CLK_CONDB (0xA2010104) bit[31]=1	Min. vcore voltage (typ)
			7: HFOSC_DIV4_CK (78MHz)	*CLK_CONDA (0xA2010100) bit[1]=1	1.1v
			8: HFOSC_DIV5_CK (62.4MHz)	*CLK_CONDA (0xA2010100) bit[5]=1	1.1v

The configured CRs and steps are:

POWERFUL_DIV_EN : 0xA2010100[31:0]

PLL_DIV_EN=1 : 0xA2010104[31]

SFC_MUX_SEL : 0xA2010104[13:10]

RG_SFCCSW_FORCE_ON=1 : 0xA201010C[3]

CHG_SFC =1 : 0xA21D0150[3]

MUX change will succeed when read 0xA21D0150[3] = 0.

RG_SFCCSW_FORCE_ON=0 : 0xA201010C[3]

30.2.6. DSP Clock Setting

The DSP clock supports slow clock, 124.8MHz and max. 156MHz. DSP clock is for audio.

	Change bit (gating when chg, auto clear)	Mux select register (active when chg=1)	Mux select option	Powerful divide enable bit works @ *CLK_CONDB (0xA2010104) bit[31]=1	Min. vcore voltage (typ)
CSW_DSP_CK	CHG_DSP = *ACFG_CLK_UPDATE (0XA21D0150) BIT[6]	DSP_MUX_SEL = *CLK_CONDB (0xA2010104) bit[30:28]	0: CSW_LP_CLKSQ_CK (max. 26MHz)	NA	0.9v
			1: CSW_LP_LFOSC_CK (max. 26MHz)	NA	0.9v
			2: MPLL_DIV2_CK (156MHz)	*CLK_CONDA (0xA2010100) bit[16]=1 *CLK_CONDA (0xA2010100) bit[16+5]=1	1.3v

© 2015 - 2017 MediaTek Inc.

This document contains information that is proprietary to MediaTek Inc. ("MediaTek") and/or its licensor(s).
Any unauthorized use, reproduction or disclosure of this document in whole or in part is strictly prohibited.

	Change bit (gating when chg, auto clear)	Mux select register (active when chg=1)	Mux select option	Powerful divide enable bit works @ *CLK_CONDB (0xA2010104) bit[31]=1	Min. vcore voltage (typ)
			3: MPLL_F138M_CK (none 50/50 duty 138.68MHz)	*CLK_CONDA (0xA2010100) bit[16+10]=1	1.3v
			4: MPLL_DIV2P5_CK (none 50/50 duty 124.8MHz)	*CLK_CONDA (0xA2010100) bit[16]=1 *CLK_CONDA (0xA2010100) bit[16+6]=1	1.1v
			5: UPLL_F125M_CK (none 50/50 duty 124.8MHz)	*CLK_CONDA (0xA2010100) bit[8+2]=1	1.1v
			6: HFOSC_DIV2_CK (156MHz)	*CLK_CONDA (0xA2010100) bit[1]=1	1.3v
			7: HFOSC_DIV2P5_CK (none 50/50 duty 124.8MHz)	*CLK_CONDA (0xA2010100) bit[2]=1	1.1v

The configured CRs and steps are:

POWERFUL_DIV_EN : 0xA2010100[31:0]

PLL_DIV_EN=1 : 0xA2010104[31]

RG_DSPCSW_FORCE_ON=1 : 0xA201010C[6]

DSP_MUX_SEL : 0xA2010104[30:28]

CHG_DSP =1 : 0xA21D0150[6]

MUX change will succeed when read 0xA21D0150[6] = 0.

RG_DSPCSW_FORCE_ON=0 : 0xA201010C[6]

© 2015 - 2017 MediaTek Inc.

This document contains information that is proprietary to MediaTek Inc. (“MediaTek”) and/or its licensor(s).
Any unauthorized use, reproduction or disclosure of this document in whole or in part is strictly prohibited.

30.2.7. DISP PWM Clock Setting

DISP PWM Clock supports slow clock, and 104MHz. DISP PWM clock is for display module.

	Change bit (gating when chg, auto clear)	Mux select register (active when chg=1)	Mux select option	Powerful divide enable bit works @ *CLK_CONDB (0xA2010104) bit[31]=1	Min. vcore voltage (typ)
CSW_DISP_CK	CHG_DISP_PWM = *ACFG_CLK_UPDATE (0XA21D0150) BIT[9]	DISP_PWM_MUX_SEL = *CLK_CONDB (0xA2010104) bit[27:26]	0: CSW_LP_CLKSQ_CK (max. 26MHz)	NA	0.9v
			1: CSW_LP_LFOSC_CK (max. 26MHz)	NA	0.9v
			2: UPLL_F104M_CK (104MHz)	*CLK_CONDA (0xA2010100) bit[8+1]=1	1.1v
			3: HFOSC_DIV3_CK (104MHz)	*CLK_CONDA (0xA2010100) bit[0]=1 *CLK_CONDA (0xA2010100) bit[3]=1	1.1v

The configured CRs and steps are:

POWERFUL_DIV_EN : 0xA2010100[31:0]

PLL_DIV_EN=1 : 0xA2010104[31]

DISP_PWM_MUX_SEL : 0xA2010104[27:26]

RG_DISPPWMCSW_FORCE_ON=1 : 0xA201010C[9]

CHG_DISP_PWM =1 : 0xA21D0150[9]

MUX change will succeed when read 0xA21D0150[9] = 0.

RG_DISPPWMCSW_FORCE_ON=0 : 0xA201010C[9]

© 2015 - 2017 MediaTek Inc.

This document contains information that is proprietary to MediaTek Inc. (“MediaTek”) and/or its licensor(s).
Any unauthorized use, reproduction or disclosure of this document in whole or in part is strictly prohibited.

30.2.8. CAM Clock Setting

The CAM clock supports slow clock, 48MHz and 312MHz. CAM clock is for camera module.

	Change bit (gating when chg, auto clear)	Mux select register (active when chg=1)	Mux select option	Powerful divide enable bit works @ *CLK_CONDB (0xA2010104) bit[31]=1	Min. vcore voltage (typ)
CSW_CAM_CK	CHG_CAM = *ACFG_CLK_UPDATE (0XA21D0150) BIT[7]	CAM_MUX_SEL = *CLK_CONDB (0xA2010104) bit[23:22]	0: CSW_LP_CLKSQ_CK (max. 26MHz)	NA	0.9v
			1: CSW_LP_LFOSC_CK (max. 26MHz)	NA	0.9v
			2: UPLL_48M_CK (48MHz)	NA	1.1v
			3: UPLL_F312M_CK (312MHz)	NA	1.1v

The configured CRs and steps are:

POWERFUL_DIV_EN : 0xA2010100[31:0]

PLL_DIV_EN=1 : 0xA2010104[31]

CAM_MUX_SEL : 0xA2010104[23:22]

RG_CAMCSW_FORCE_ON=1 : 0xA201010C[7]

CHG_CAM =1 : 0xA21D0150[7]

MUX change will succeed when read 0xA21D0150[7] = 0.

RG_CAMCSW_FORCE_ON=0 : 0xA201010C[7]

© 2015 - 2017 MediaTek Inc.

This document contains information that is proprietary to MediaTek Inc. (“MediaTek”) and/or its licensor(s).
Any unauthorized use, reproduction or disclosure of this document in whole or in part is strictly prohibited.

30.2.9. SLCD Clock Setting

The SLCD clock supports slow clock, 78MHz, 104MHz, and max. 124.8MHz. SLCD clock is for display module.

	Change bit (gating when chg, auto clear)	Mux select register (active when chg=1)	Mux select option	Powerful divide enable bit works @ *CLK_CONDB (0xA2010104) bit[31]=1	Min. vcore voltage (typ)
CSW_SFC_CK	CHG_SLCD = *ACFG_CLK_UPDATE (0XA21D0150) BIT[4]	{RG_SLCD_CK_SEL, SLCD_MUX_SEL} = {*CLK_CONDD (0xA201010C) bit[21], *CLK_CONDB (0xA2010104) bit[16:14]}	0: CSW_LP_CLKSQ_CK (max. 26MHz)	NA	0.9v
			1: CSW_LP_LFOSC_CK (max. 26MHz)	NA	0.9v
			2: MPLL_DIV2P5_CK (none 50/50 duty 124.8MHz)	*CLK_CONDA (0xA2010100) bit[16]=1 *CLK_CONDA (0xA2010100) bit[16+6]=1	1.1v
			3: MPLL_DIV3_CK (104MHz)	*CLK_CONDA (0xA2010100) bit[16]=1 *CLK_CONDA (0xA2010100) bit[16+4]=1 *CLK_CONDA (0xA2010100) bit[16+7]=1	1.1v
			4: MPLL_DIV4_CK (78MHz)	*CLK_CONDA (0xA2010100) bit[16]=1 *CLK_CONDA (0xA2010100) bit[16+5]=1	1.1v
			5: HFOSC_DIV2P5_CK (none 50/50 duty 124.8MHz)	*CLK_CONDA (0xA2010100) bit[2]=1	1.1v
			6: HFOSC_DIV3_CK (104MHz)	*CLK_CONDA (0xA2010100) bit[0]=1 *CLK_CONDA (0xA2010100) bit[3]=1	1.1v
			7: HFOSC_DIV4_CK (78MHz)	*CLK_CONDA (0xA2010100) bit[1]=1	1.1v

© 2015 - 2017 MediaTek Inc.

This document contains information that is proprietary to MediaTek Inc. ("MediaTek") and/or its licensor(s).
Any unauthorized use, reproduction or disclosure of this document in whole or in part is strictly prohibited.

	Change bit (gating when chg, auto clear)	Mux select register (active when chg=1)	Mux select option	Powerful divide enable bit works @ *CLK_CONDB (0xA2010104) bit[31]=1	Min. vcore voltage (typ)
			8: MPLL_F125M_CK (124.5MHz 50/50 duty)	*CLK_CONDA (0xA2010100) bit[16+3]=1	1.1v

The configured CRs and steps are:

POWERFUL_DIV_EN : 0xA2010100[31:0]

PLL_DIV_EN=1 : 0xA2010104[31]

SLCD_MUX_SEL : 0xA2010104[16:14]

RG_SLCD_CK_SEL : 0xA201010C[21]

RG_SLCDCSW_FORCE_ON=1 : 0xA201010C[4]

CHG_SLCD =1 : 0xA21D0150[4]

MUX change will succeed when read 0xA21D0150[4] = 0.

RG_SLCDCSW_FORCE_ON=0 : 0xA201010C[4]

30.2.10. MSDC0 Clock Setting

The MSDC0 clock supports slow clock, 62.4MHz, 78MHz and max. 89.1MHz. MSDC0 clock is for eMMC0 module.

	Change bit (gating when chg, auto clear)	Mux select register (active when chg=1)	Mux select option	Powerful divide enable bit works @ *CLK_CONDB (0xA2010104) bit[31]=1	Min. vcore voltage (typ)
CSW_MSDC0_CK	CHG_MSDC0 = *ACFG_CLK_UPDATE (0XA21D0150) BIT[10]	{ RF_MSDC0_MSDC_CFG_CLKSRC_PATCH, RF_MSDC0_MSDC_CFG_PWS } = *MSDC0_MSDC_CFG (0xA0020000) bit {[23],[4:3]}	0: CSW_LP_CLKSQ_CK (max. 26MHz)	NA	0.9v
			1: CSW_LP_LFOSC_CK (max. 26MHz)	NA	0.9v
			2: MPLL_DIV3P5_CK (89.1MHz)	*CLK_CONDA (0xA2010100) bit[16]=1 *CLK_CONDA (0xA2010100) bit[16+8]=1	1.3v

© 2015 - 2017 MediaTek Inc.

This document contains information that is proprietary to MediaTek Inc. (“MediaTek”) and/or its licensor(s).
Any unauthorized use, reproduction or disclosure of this document in whole or in part is strictly prohibited.

	Change bit (gating when chg, auto clear)	Mux select register (active when chg=1)	Mux select option	Powerful divide enable bit works @ *CLK_CONDB (0xA2010104) bit[31]=1	Min. vcore voltage (typ)
			3: MPLL_DIV4_CK (78MHz)	*CLK_CONDA (0xA2010100) bit[16]=1 *CLK_CONDA (0xA2010100) bit[16+5]=1	1.2v
			4: MPLL_DIV5_CK (62.4MHz)	*CLK_CONDA (0xA2010100) bit[16]=1 *CLK_CONDA (0xA2010100) bit[16+9]=1	1.1v
			5: HFOSC_DIV3P5_CK (89.1MHz)	*CLK_CONDA (0xA2010100) bit[4]=1	1.3v
			6: HFOSC_DIV4_CK (78MHz)	*CLK_CONDA (0xA2010100) bit[1]=1	1.2v
			7: HFOSC_DIV5_CK (62.4MHz)	*CLK_CONDA (0xA2010100) bit[5]=1	1.1v

The configured CRs and steps are:

POWERFUL_DIV_EN : 0xA2010100[31:0]

PLL_DIV_EN=1 : 0xA2010104[31]

RF_MSDC0_MSDC_CFG_CLKSRC_PATCH : 0xA0020000[23]

RF_MSDC0_MSDC_CFG_PWS : 0xA0020000[4:3]

RG_MSDC0CSW_FORCE_ON=1 : 0xA201010C[10]

CHG_MSDC0 =1 : 0xA21D0150[10]

MUX change will succeed when read 0xA21D0150[10] = 0.

RG_MSDC0CSW_FORCE_ON=0 : 0xA201010C[10]

© 2015 - 2017 MediaTek Inc.

This document contains information that is proprietary to MediaTek Inc. (“MediaTek”) and/or its licensor(s).
Any unauthorized use, reproduction or disclosure of this document in whole or in part is strictly prohibited.

30.2.11. MSDC1 Clock Setting

The MSDC1 clock supports slow clock, 62.4MHz, 78MHz and max. 89.1MHz. MSDC1 clock is for eMMC1 module.

	Change bit (gating when chg, auto clear)	Mux select register (active when chg=1)	Mux select option	Powerful divide enable bit works @ *CLK_CONDB (0xA2010104) bit[31]=1	Min. vcore voltage (typ)
CSW_MSDC1_CK	CHG_MSDC1 = *ACFG_CLK_UPDATE (0XA21D0150) BIT[11]	{RF_MSDC1_MSDC_CFG_CLKSRC_PATCH, RF_MSDC1_MSDC_CFG_PWS} = *MSDC1_MSDC_CFG (0xA0030000) bit {[23],[4:3]}	0: CSW_LP_CLKSQ_CK (max. 26MHz)	NA	0.9v
			1: CSW_LP_LFOSC_CK (max. 26MHz)	NA	0.9v
			2: MPLL_DIV3P5_CK (89.1MHz)	*CLK_CONDA (0xA2010100) bit[16]=1 *CLK_CONDA (0xA2010100) bit[16+8]=1	1.3v
			3: MPLL_DIV4_CK (78MHz)	*CLK_CONDA (0xA2010100) bit[16]=1 *CLK_CONDA (0xA2010100) bit[16+5]=1	1.2v
			4: MPLL_DIV5_CK (62.4MHz)	*CLK_CONDA (0xA2010100) bit[16]=1 *CLK_CONDA (0xA2010100) bit[16+9]=1	1.1v
			5: HFOSC_DIV3P5_CK (89.1MHz)	*CLK_CONDA (0xA2010100) bit[4]=1	1.3v
			6: HFOSC_DIV4_CK (78MHz)	*CLK_CONDA (0xA2010100) bit[1]=1	1.2v
			7: HFOSC_DIV5_CK (62.4MHz)	*CLK_CONDA (0xA2010100) bit[5]=1	1.1v

© 2015 - 2017 MediaTek Inc.

This document contains information that is proprietary to MediaTek Inc. (“MediaTek”) and/or its licensor(s).
Any unauthorized use, reproduction or disclosure of this document in whole or in part is strictly prohibited.

The configured CRs and steps are:

POWERFUL_DIV_EN	: 0xA2010100[31:0]
PLL_DIV_EN=1	: 0xA2010104[31]
RF_MSDC1_MSDC_CFG_CLKSRC_PATCH	: 0xA0030000[23]
RF_MSDC1_MSDC_CFG_PWS	: 0xA0030000[4:3]
RG_MSDC1CSW_FORCE_ON=1	: 0xA201010C[11]
CHG_MSDC1 =1	: 0xA21D0150[11]

MUX change will succeed when read 0xA21D0150[11] = 0.

RG_MSDC1CSW_FORCE_ON=0	: 0xA201010C[11]

© 2015 - 2017 MediaTek Inc.

This document contains information that is proprietary to MediaTek Inc. (“MediaTek”) and/or its licensor(s).
Any unauthorized use, reproduction or disclosure of this document in whole or in part is strictly prohibited.

31. Power Management Unit

The power management unit (PMU) manages the power supply of the entire chip, such as baseband, processor, memory, camera, vibrator, and more. The digital part of PMU is integrated into the analog part (see Figure 31-1).

PMU includes the following analog functions for signal processing:

- Digital Core Buck Converter (V_{core}): The buck converter is optimized for high efficiency and low quiescent current.
- LDO and power switch. Regulate battery voltage to lower voltage level.
- LED current sink (ISINK) switches: Sink current for the LCM module.
- Start-up (STRUP). Generates power on/off control sequence of start-up circuits.
- Pulse charger (PCHR). Controls battery charging.

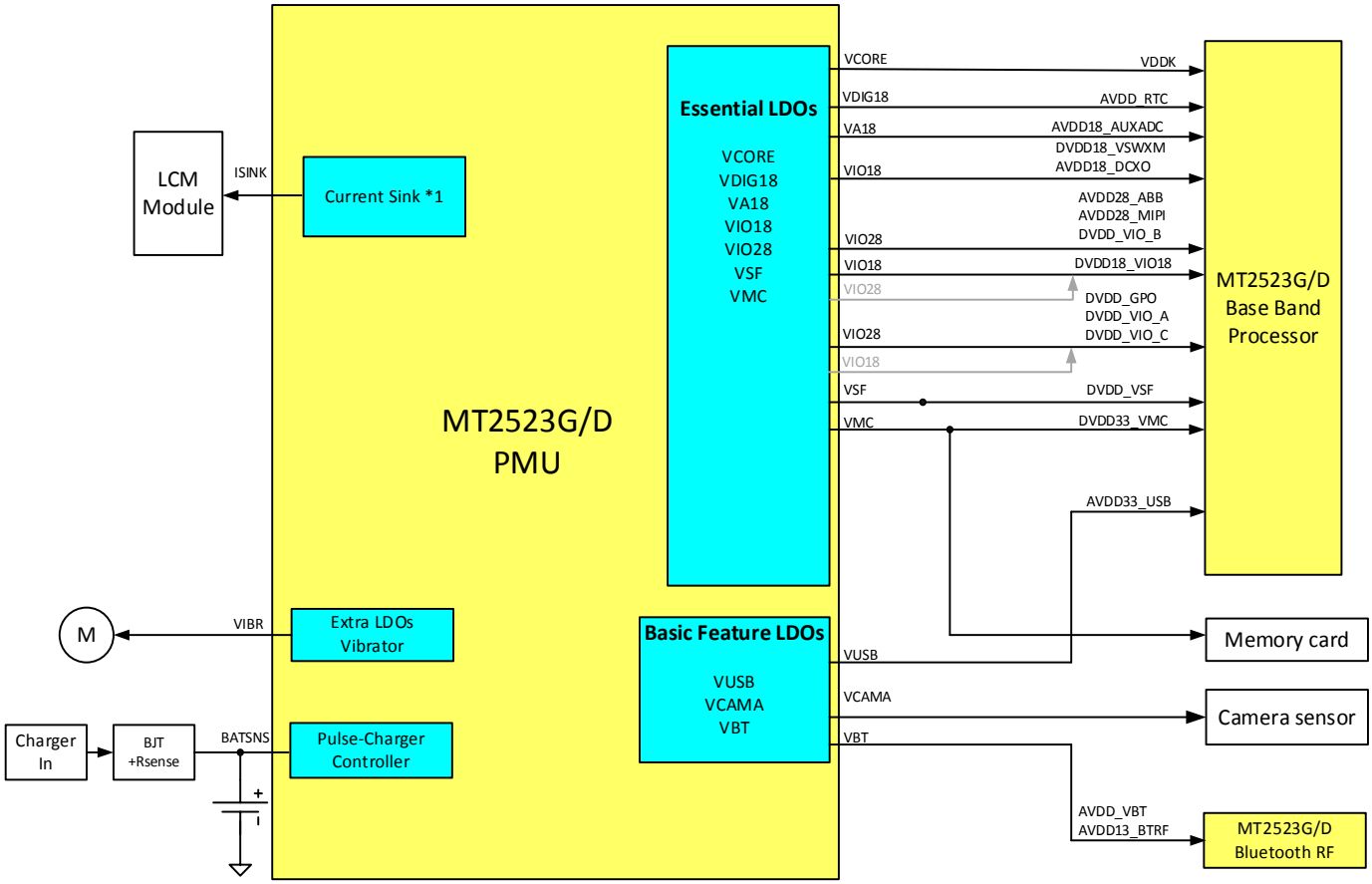

Figure 31-1. MT2523 series PMU architecture

© 2015 - 2017 MediaTek Inc.

This document contains information that is proprietary to MediaTek Inc. ("MediaTek") and/or its licensor(s).
Any unauthorized use, reproduction or disclosure of this document in whole or in part is strictly prohibited.

31.1. Power supply schemes

There are four battery input balls for regulator input. The recommended battery operation range is from 3.15V to 4.8V, which is suitable for Li-ion battery applications.

1) VBAT_BUCK_CTRL and VBAT_CORE are power supplies for VCORE in buck mode, VBAT_LDOS1 is the power supply for VCORE in LDO mode, VIO18, VA18, VIO28, VUSB and VDIG18.

2) There is a power switch between VBAT_LDOS1 and PWRSW_OUT to reduce sub-block power leakage current. PWRSW_OUT supplies power for VA28, VCAMA, VBT, VMC and VIBR.

3) VSWXM and VSWDP power switches are supplied with power from VIO18.

4) VSWMP power switch is supplied with power from VIO28.

The LDO input power plan is shown in Table 31-1.

Table 31-1. LDO input power plan

Input power plan	Type	Name
VBAT_BUCK_CTRL VBAT_VCORE	Buck	VCORE (buck mode)
VBAT_LDOS1	DLDO	VCORE (LDO mode)
VBAT_LDOS2=>PWRSW_OUT	ALDO	VA28
VBAT_LDOS2=>PWRSW_OUT	ALDO	VCAMA
VBAT_LDOS1	DLDO	VIO18
From VIO18	Power switch	VSWXM
From VIO18	Power switch	VSWDP
VBAT_LDOS2=>PWRSW_OUT	ALDO	VBT
VBAT_LDOS1	ALDO	VA18
VBAT_LDOS2	DLDO	VSF
VBAT_LDOS1	DLDO	VIO28
From VIO28	Power switch	VSWMP
VBAT_LDOS1	DLDO	VUSB
VBAT_LDOS2=>PWRSW_OUT	DLDO	VMC
VBAT_LDOS2=>PWRSW_OUT	DLDO	VIBR
VBAT_LDOS1	DVDD18_DIG	VDIG18

© 2015 - 2017 MediaTek Inc.

This document contains information that is proprietary to MediaTek Inc. (“MediaTek”) and/or its licensor(s).
Any unauthorized use, reproduction or disclosure of this document in whole or in part is strictly prohibited.

31.2. Voltage regulator

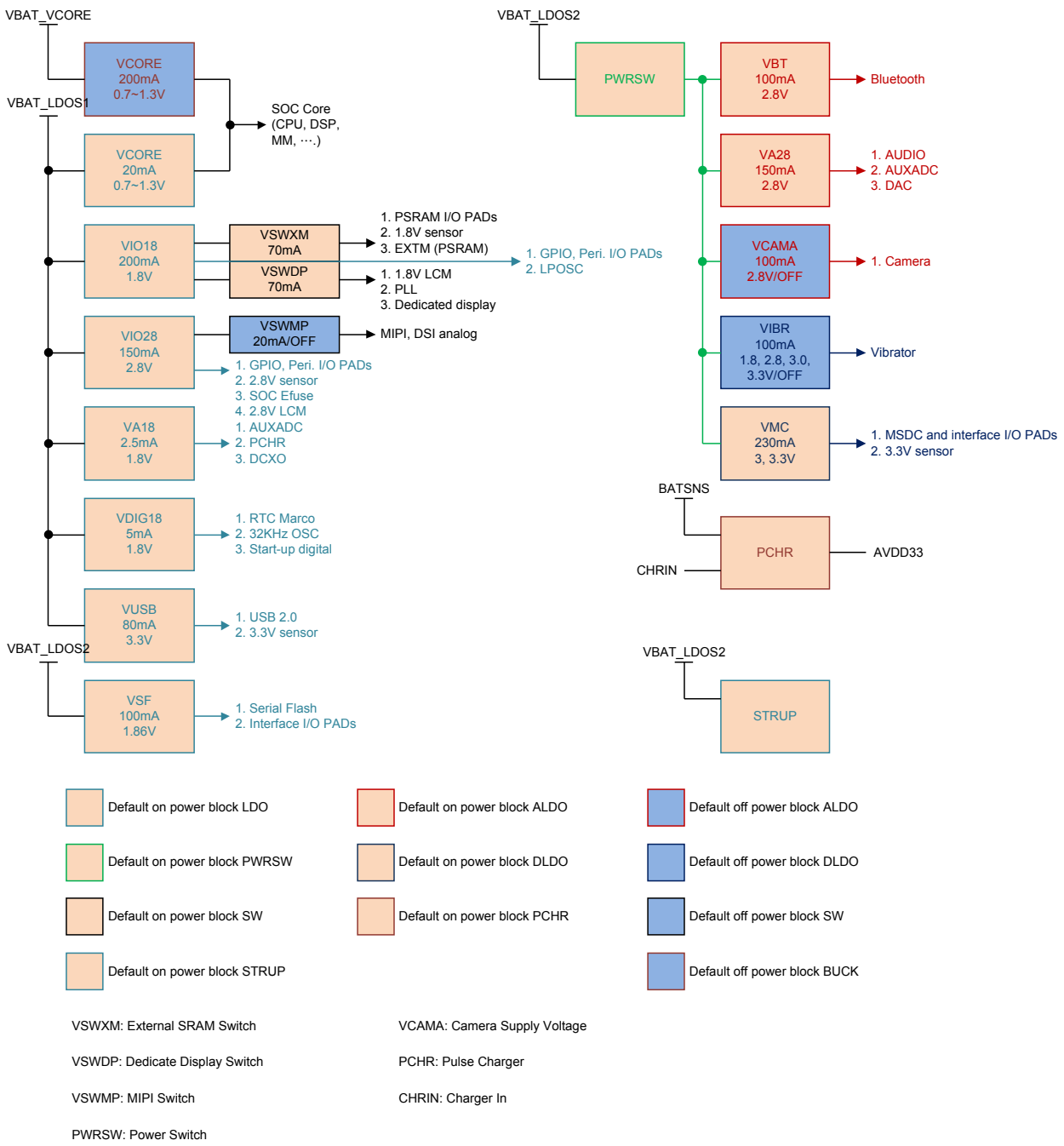

Figure 31-2. MT2523 series power domain

31.2.1. LDO

PMU integrates 12 general low dropout regulators (LDO). Performance optimization is achieved using the APIs for different quiescent current, dropout voltage, line/load regulation, ripple rejection and output noise.

© 2015 - 2017 MediaTek Inc.

This document contains information that is proprietary to MediaTek Inc. (“MediaTek”) and/or its licensor(s).
Any unauthorized use, reproduction or disclosure of this document in whole or in part is strictly prohibited.

LDO is capable of maintaining its specified output voltage over a wide range of load current and input voltage, down to a very small difference between input and output voltages.

The LDO design includes features, such as discharge control, soft start and current limit. Before LDO is enabled, the output pin of LDO should be first discharged to avoid voltage accumulation on the capacitance. The soft-start limits inrush current and controls output-voltage rising time during power-up. The current limit is the current protection to limit LDO's output current and power dissipation.

There are three types of LDOs in PMU of the MT2523 series platform and the general LDO block diagram is shown in Figure 31-3. . The analog LDO is optimized for low-frequency ripple rejection to reject VBAT ripples. The digital IO LDO is a linear regulator optimized for very low quiescent current. VDIG18 LDO is a linear regulator that can charge up a capacitor-type backup coin cell that supplies the RTC module.

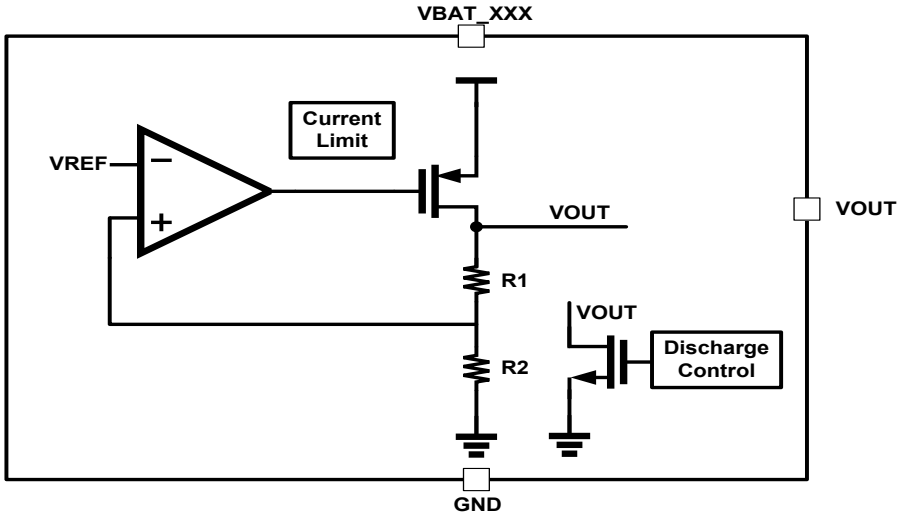

Figure 31-3. General LDO block diagram

31.2.1.1. LDO types

Table 31-2. LDO types and brief specifications

Type	LDO name	Vout (Volt)	Imax (mA)	Description
ALDO	VBT	2.8	100	Bluetooth
ALDO	VA28	2.8	150	Audio
ALDO	VA18	1.8	2.5	AUXADC
ALDO	VCAMA	2.8	100	Camera sensor
DLDO	VIO28	2.8	150	Digital IO and Bluetooth
DLDO	VUSB	3.3	80	USB
DLDO	VIO18	1.8	200	Digital IO
DLDO	VCORE	0.7~1.30	20	Digital baseband
DLDO	VIBR	1.3/1.5/1.8/2/2.5/2.8/3/3.3	100	Vibrator
DLDO	VMC	1.8/2.8/3.0/3.3	230	Memory card

© 2015 - 2017 MediaTek Inc.

This document contains information that is proprietary to MediaTek Inc. ("MediaTek") and/or its licensor(s).
Any unauthorized use, reproduction or disclosure of this document in whole or in part is strictly prohibited.

Type	LDO name	Vout (Volt)	Imax (mA)	Description
DLDO	VSF	1.86/3.0/3.3	100	Serial flash
Power Switch	VSWXM	1.8	70	Powered by VIO18 PSRAM I/O.
Power Switch	VSWDP	1.8	70	Powered by VIO18 Dedicated display
Power Switch	VSWMP	2.8	20	MIPI DSI analog

31.2.1.2. Regulator ON

There are three power modes configured by software when the regulator is on – **Normal** mode, **Lite** mode and **LP** mode. In power-on state, the regulators are powered on by normal mode to achieve fast power-on. The soft start feature limits the inrush current to avoid battery voltage drop. DIG18 LDO is in **ULP** mode at power-off state.

31.2.1.3. Regulator Off

Disabling the regulator and entering the shutdown mode will cause output voltage to discharge through N-MOSFET to ground. In shutdown mode, the quiescent current can be reduced to below 0.1µA.

31.3. Low power mode

The device supports four low-power modes to achieve the best compromise in low power consumption.

The **ULP** mode LDO is only implemented in DIG18, VCOR_LOD, VIO18, VIO28 and VSF.

LDO mode selection can be configured through the PSI register.

31.4. Pulse Charger (PCHR)

The charger controller senses the charger input voltage from either a standard AC-DC adapter or a USB charger. When the charger input voltage is within a pre-determined range, the charging process is activated. This detector can resist higher input voltage than other parts of the PMU.

31.4.1. Charger detection

Whenever an invalid charging source is detected (> 5.5V), the charger detector will stop the charging process immediately to prevent the chip even the device from burning out. In addition, if the charger-in level is not high enough (< 4.15V), the charger will also be disabled to avoid improper charging behavior.

31.4.2. Charging control

When the charger is active, the charger controller will manage the charging phase according to the battery status. During the charging period, the battery voltage is constantly monitored. The battery charger supports **pre-charge mode** (VBAT < 3.45V, PMU power-off state), **CC mode** (constant current mode or fast charging mode at the range 3.45V < VBAT < 4.2V) and **CV mode** (constant voltage mode) to optimize the charging process for Li-ion battery. Figure 31-4 and Figure 31-5 is the charging block/state diagram.

© 2015 - 2017 MediaTek Inc.

This document contains information that is proprietary to MediaTek Inc. (“MediaTek”) and/or its licensor(s).
Any unauthorized use, reproduction or disclosure of this document in whole or in part is strictly prohibited.

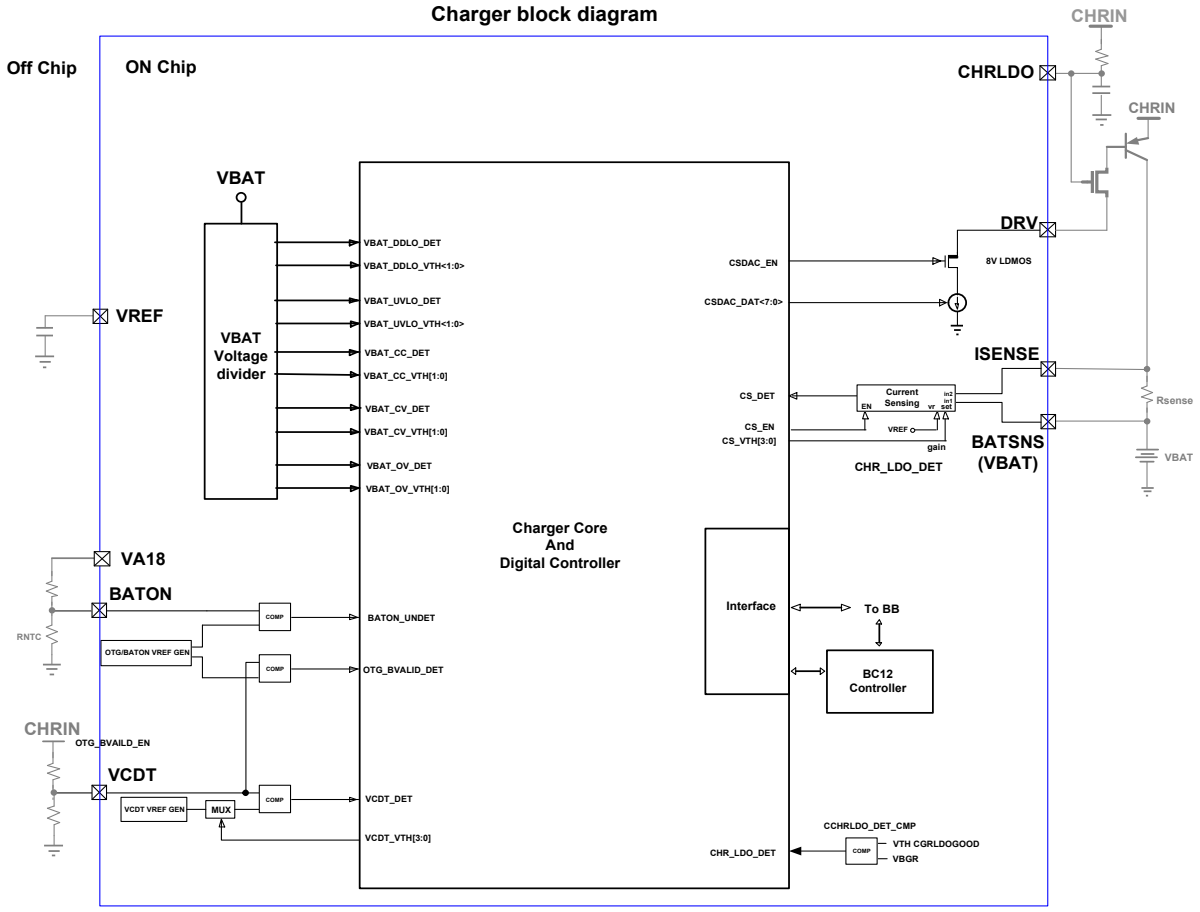

Figure 31-4. PCHR schematics

This document contains information that is proprietary to MediaTek Inc. ("MediaTek") and/or its licensor(s).
Any unauthorized use, reproduction or disclosure of this document in whole or in part is strictly prohibited.

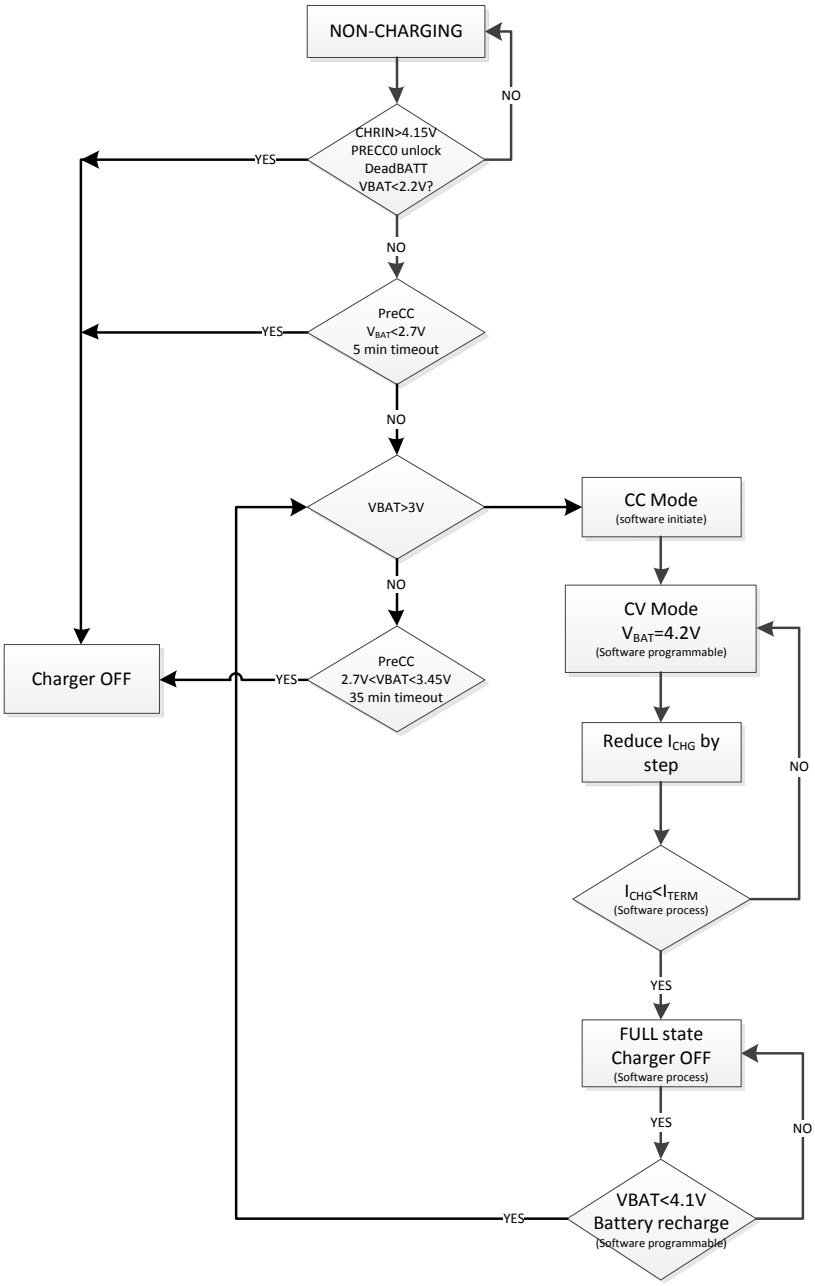

Figure 31-5. Charging control modes

Pre-charge mode

When the battery voltage is in the UVLO state, the charger will operate in the pre-charge mode. There are two steps in this mode. When the battery voltage is deeply discharged below 2.2V, PRECC0 trickle charging current will be applied to the battery.

The PRECC0 trickle charging current is about 550ms pulse 11mA current when VBAT is under 2.2V.

When the battery voltage exceeds 2.2V, called the PRECC1 stage, the closed-loop pre-charge will be enabled. The voltage drop across the external RSENSE is kept around 3.92mV (despite AC charger or USB host plug-in. The closed-loop pre-charge current can be calculated:

© 2015 - 2017 MediaTek Inc.

This document contains information that is proprietary to MediaTek Inc. (“MediaTek”) and/or its licensor(s).
Any unauthorized use, reproduction or disclosure of this document in whole or in part is strictly prohibited.

$$I_{PRECC1} = \frac{V_{SENSE}}{Rsense} = \frac{3.92mV}{Rsense}$$

Constant current mode

As the battery is charged up and over 3.45V, it can be switched to the CC mode. (CHR_EN should be high.) In CC mode, several charging currents can be set by programming registers or the external RSENSE resistor. The charging current can be determined by CS_VTH/RSENSE, where CS_VTH is programmed by registers. For example, if RSENSE is selected as 0.56Ω, the CC mode charging current can be set from 7 to 150mA. It can accommodate the battery charger to various charger inputs with different current capabilities.

Constant voltage mode and over-voltage protection (OV)

When the battery voltage reaches about 4.2V, a constant voltage will be used for charging. This is called the full-voltage charging mode or constant-voltage charging mode in correspondence to a linear charger. When the battery voltage actually reaches 4.2V, the charging current will gradually decrease, and the end-of-charging process will start. This may prolong the charging and detecting period for acquiring optimized full charging volume. The charging process completes once the current automatically reaches zero using different batteries for optimization.

BC1.2 dead-battery support of Chinese standard

MT2523 series supports dead-battery condition (called BC1.2). The specification protects dead-battery charging by timer and trickle current. Once the battery voltage is below 2.2V, a period (TUNIT) of trickle current (IUNIT) will be applied to the battery.

If the battery voltage is still below 2.2V after trickle current is applied, the charger will be disabled. On the other hand, if the battery voltage is raised to above 2.2V, the charger will enter the PRECC1 stage, and the charging current will be PRECC1 current.

Under the condition of battery voltage being from 2.2V to 3.45V, the charger will charge the battery with the PRECC1 current.

A dedicated 5-min (T1) timer will be timed out and disable the charger if the battery voltage is always below 2.7V under charging. Another 35-min (T2) timer will also be timed out and disable the charger if the battery voltage is always kept between 2.7V and 3.45V under charging.

The trickle current (IUNIT) and two dedicated timers will protect the charging action if the battery is dead.

31.5. Power On/Off sequence

PMU handles the power-on and power-off of the handset. If the battery voltage is neither in the UVLO state ($V_{BAT} \geq UVLO_{VTHH}$) nor in thermal condition, there will be three methods to power on the handset.

1) Pulling the PWRKEY low (press PWRKEY).
2) Setting the PWRHOLD to high.
3) Plugging in a valid charger.

The power on/off sequence is shown in Figure 31-6 and Figure 31-7.

© 2015 - 2017 MediaTek Inc.

This document contains information that is proprietary to MediaTek Inc. (“MediaTek”) and/or its licensor(s).
Any unauthorized use, reproduction or disclosure of this document in whole or in part is strictly prohibited.

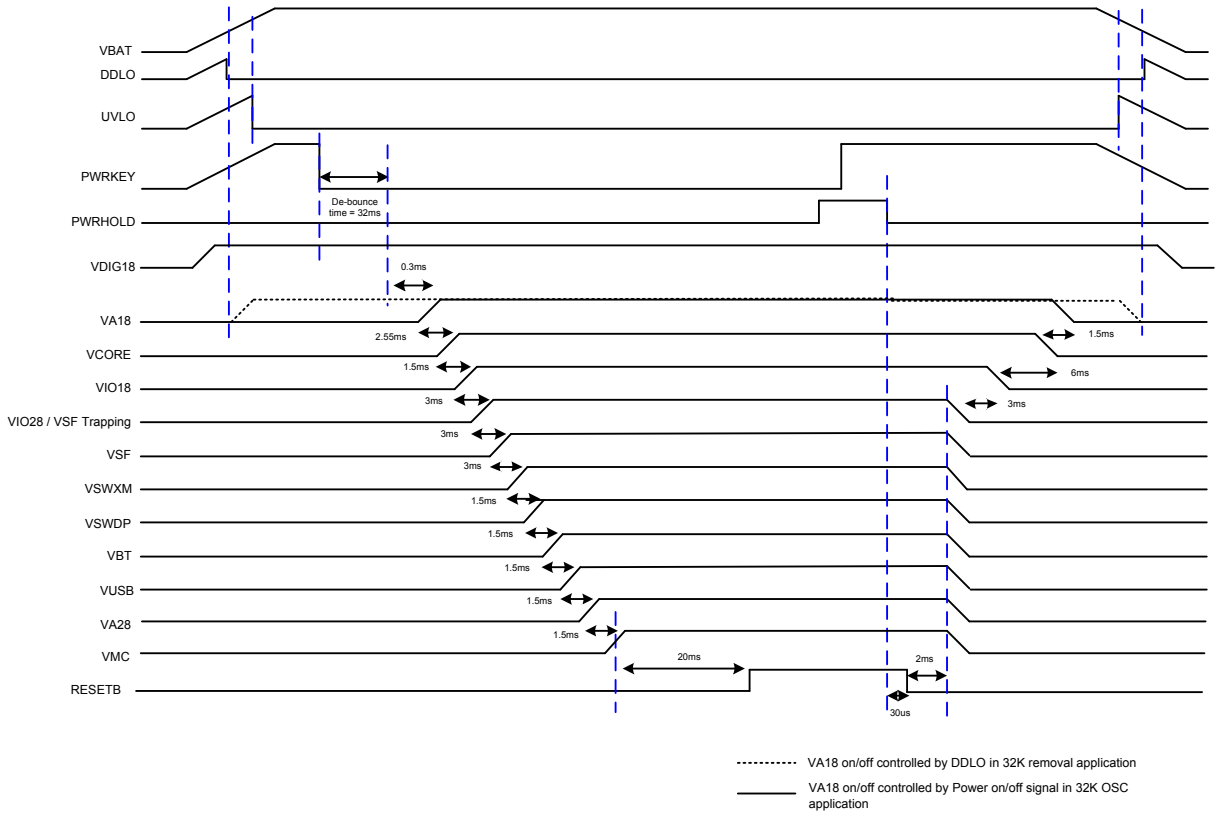

Figure 31-6. Power-on/off control sequence by pressing PWRKEY

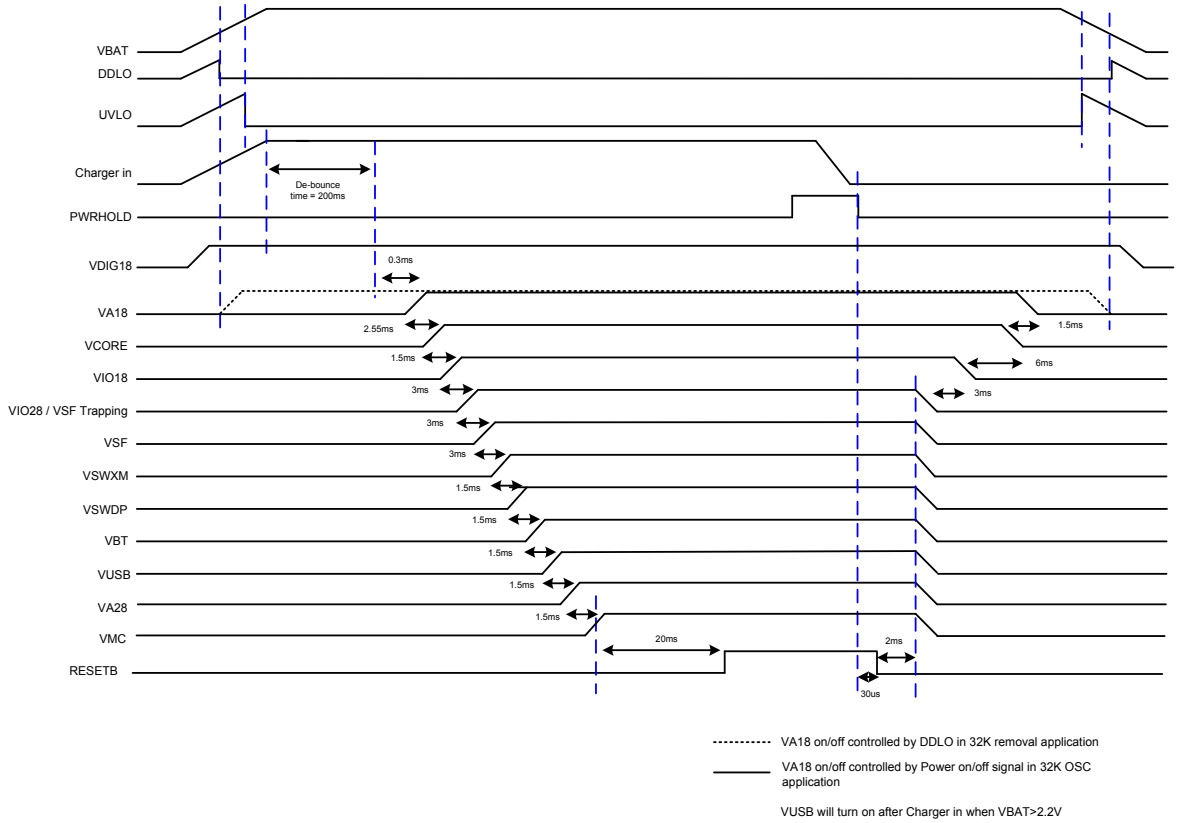

Figure 31-7. Power-on/off control sequence by charger plug in

This document contains information that is proprietary to MediaTek Inc. (“MediaTek”) and/or its licensor(s).
Any unauthorized use, reproduction or disclosure of this document in whole or in part is strictly prohibited.

1) Pushing PWRKEY (pulling the PWRKEY pin to low level).

Pulling PWRKEY low is a typical method to turn on the handset. The system reset ends once all default-on regulators are sequentially turned on. After that, the baseband will send the BBWAKEUP signal back to PMIC for acknowledgement. To successfully power on the handset, PWRKEY should be kept low until PMIC receives BBWAKEUP from the baseband.

2) RTC module generates PWRHOLD to wake up the system.

If the RTC module is scheduled to wake up the handset at some time, the PWRHOLD signal will be directly sent to PMIC. In this case, PWRHOLD becomes high at specific moment and allows PMIC power-on. This is called the RTC alarm.

3) Valid charger plug-in (CHRIN voltage within valid range).

The charger plug-in will also turn on the handset if the charger is valid. When PMU_CHGIN input voltage is greater than CHGIN_VTHH and VSYS>UVLO, the handset will also be powered on.

Under-voltage lockout (UVLO)

The UVLO state in PMIC prevents start-up if the initial voltage of the main battery is below UVLO_VTH. The judgment is done by VBATSNS. It ensures that the handset is powered on with the battery in good condition. The UVLO function is performed by a hysteretic comparator to ensure smooth power-on. In addition, when the battery voltage is getting lower, it will enter the UVLO state and PMIC will be turned off by itself, except for VRTC LDO, to prevent further discharging. Once PMIC enters the UVLO state, it will draw low quiescent current. RTC LDO will still be working until DDLO disables it.

Deep discharge lockout (DDLO)

PMIC will enter the deep discharge lockout (DDLO) state when the battery voltage drops below DDLO_VTHL. In this state, VRTC LDO will be shut down. Otherwise, it will draw very low quiescent current to prevent further discharging or even damage to the cells.

Reset

PMIC contains a reset control circuit that takes effect at both power-up and power-down. The RESETB pin is held low in the beginning of power-up and returns to high after the pre-determined delay time. The delay time is controlled by a large counter, which uses the clock from the internal ring-oscillator. At power-off, the RESETB pin will return to low immediately without any delay.

Over-temperature protection

If the die temperature of PMIC exceeds 125°C (typical condition), PMIC will automatically disable all regulators except for VRTC. Once the over-temperature state is resolved, a new power-on sequence will be required to enable the regulators.

31.6. LED current sink (ISINK)

Maximum of two indicator LED drivers are supported. Figure 31-8 provides the usage of indicator LED drivers. The LED driver of MT2523 series supports PWM mode and breath mode. The LED current changing from small to large then descending is the breath mode. The breathing cycle time, including Trising_1, Trising_2, Ton, Toff, Tfalling_1, and Tfalling_2 period can be modified through software configuration of the registers.

© 2015 - 2017 MediaTek Inc.

This document contains information that is proprietary to MediaTek Inc. (“MediaTek”) and/or its licensor(s).
Any unauthorized use, reproduction or disclosure of this document in whole or in part is strictly prohibited.

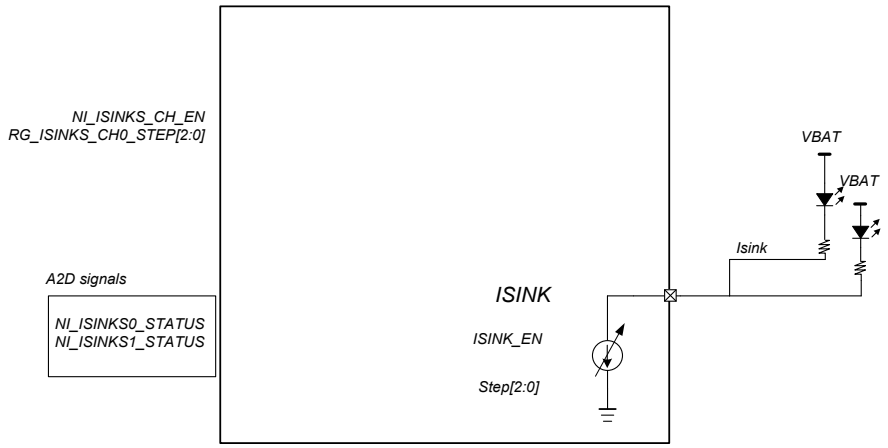

Figure 31-8. ISINK block diagram

31.7. Vibrator driver

The VIBR driver power allows up to 100mA current for eccentric rotating mass (ERM) or coin type vibrator with programmable output voltage.

31.8. PMU AUXADC

The PMU auxiliary ADC includes the following functional blocks:

- Analog multiplexer: Selects signals from one of the input channels. The signal, such as temperature, are monitored and transferred to the voltage domain.
- 15-bit A/D converter: Converts the multiplexed input signal to 15-bit digital data.

The PMU auxiliary ADC input range and specification is shown in Table 31-3.

Table 31-3. Application and input range of ADC channels

Channel	Application	Input range [V]
0	BATSNS	3.0 ~ 4.8
1	ISENSE	3.0 ~ 4.8
2	VCDT	0 ~ 1.5
3	BATON	0.1 ~ 1.7
Others	Internal use	N/A

© 2015 - 2017 MediaTek Inc.

This document contains information that is proprietary to MediaTek Inc. (“MediaTek”) and/or its licensor(s).
Any unauthorized use, reproduction or disclosure of this document in whole or in part is strictly prohibited.

Module name: PMIC_REG Base address: (+0h)

Address	Name	Width	Register Function
1D	RSTCFG3	8	Reset config 3
1E	INTSTS0	8	Interrupt status/clear 0
1F	INTSTS1	8	Interrupt status/clear 1
20	INTSTS2	8	Interrupt status/clear 2
21	INTSTS3	8	Interrupt status/clear 3
22	INTSTS4	8	Interrupt status/clear 4
23	INTSTS5	8	Interrupt status/clear 5
24	INTSTS6	8	Interrupt status/clear 6
25	INTEN0	8	Interrupt enable 0
26	INTEN1	8	Interrupt enable 1
27	INTEN2	8	Interrupt enable 2
28	INTEN3	8	Interrupt enable 3
29	INTEN4	8	Interrupt enable 4
2A	INTEN5	8	Interrupt enable 5
2B	INTEN6	8	Interrupt enable 6
2C	INTMISC	8	interrupt misc register
2D	PONSTS	8	Power on source record register
2E	POFFSTS	8	Power off source record register
2F	PDNSTS0	8	Power exception shutdown status 0
30	PDNSTS1	8	Power exception shutdown status 1
31	PDNSTS2	8	Power exception shutdown status 2
32	PSSTS0	8	Power supply status 0 register
33	PSSTS1	8	Power supply status 1 register
34	PSSTS2	8	Power supply status 2 register
35	PSOCSTS0	8	Power supply Overcurrent status 0 register
36	PSOCSTS1	8	Power supply Overcurrent status 1 register
37	PSPGSTS0	8	Power supply PWRGOOD status 0 register
38	PSPGSTS1	8	Power supply PWRGOOD status 1 register
39	PSOMSTS0	8	Power supply Operational mode status 0 register
3A	PSOMSTS1	8	Power supply Operational mode status 1 register
3B	PSOMSTS2	8	Power supply Operational mode status 2 register
3C	THMSTS	8	Thermal Status
3D	WKFG_STS	8	Wake Up Fuel Gauge Status
40	PSICTL	8	PSI control register
41	PSISTS	8	PSI status register
48	PPCCFG0	8	PPC configruation 0 register
4A	PPCCFG2	8	PPC configruation 2 register
4B	PPCCTL0	8	PPC control 0 register
4D	SHDNCFG1	8	Shutdown configuration 1 register
87	CHR_CON0	8	Charger control register 0
88	CHR_CON1	8	Charger Control Register 1
89	CHR_CON2	8	Charger Control Register 2
8A	CHR_CON3	8	Charger Control Register 3
8B	CHR_CON4	8	Charger Control Register 4
8D	CHR_CON6	8	Charger Control Register 6

© 2015 - 2017 MediaTek Inc.

This document contains information that is proprietary to MediaTek Inc. (“MediaTek”) and/or its licensor(s).
Any unauthorized use, reproduction or disclosure of this document in whole or in part is strictly prohibited.

Module name: PMIC_REG Base address: (+0h)

8E	CHR_CON7	8	Charger Control Register 7
8F	CHR_CON7_H	8	Charger Control Register 7_H
92	CHR_CON9	8	Charger Control Register 9
93	CHR_CON10	8	Charger Control Register 10
96	CHR_CON13	8	Charger Control Register 13
97	CHR_CON13_H	8	Charger Control Register 13_H
99	CHR_CON15	8	Charger Control Register 15
9A	CHR_CON16	8	Charger Control Register 16
9B	CHR_CON16_H	8	Charger Control Register 16_H
9C	CHR_CON17	8	Charger Control Register 17
9D	CHR_CON18	8	Charger Control Register 18
9E	CHR_CON19	8	Charger Control Register 19
9F	CHR_CON20	8	Charger Control Register 20
A0	CHR_CON21	8	Charger Control Register 21
A1	CHR_CON21_H	8	Charger Control Register 21_H
A3	CHR_CON23	8	Charger Control Register 23
A4	CHR_CON24	8	Charger Control Register 24
A5	CHR_CON25	8	Charger Control Register 25
AA	CHR_CON30	8	Charger Control Register 30
AB	CHR_CON30_H	8	Charger Control Register 30_H
AD	CHR_CON42	8	Charger Control Register 42
AE	BATON_CON0	8	BATON Control Register 0
B0	CHR_CON44	8	Charger Control Register 44
B1	CHR_CON45	8	Charger Control Register 45
B2	CHR_CON45_H	8	Charger Control Register 45_H
B3	CHR_CON46	8	Charger Control Register 46
B4	CHR_CON46_H	8	Charger Control Register 46_H
B5	CHR_CON47	8	Charger Control Register 47
DA	VA18CTL0	8	VA18 Control register 0
DB	VA18CTL1	8	VA18 Control register 1
E2	VA18PSI0	8	VA18 LDO PSI register0
E3	VA18PSI1	8	VA18 LDO PSI register1
E4	VBTCTL0	8	VBT Control register 0
E5	VACTL0	8	VA Control register 0
E6	VCLDOCTL0	8	VCORE LDO Control register 0
E8	PSWCTL1	8	PSW Control register 1
E9	VIO18CTL0	8	VIO18 Control register 0
EA	VSFCTL0	8	VSF Control register 0
EB	VIO28CTL0	8	VIO28 Control register 0
EC	VMCCTL0	8	VMC Control register 0
ED	VUSBCTL0	8	VUSB Control register 0
EF	VUSBLDO0	8	VUSBLDO0

© 2015 - 2017 MediaTek Inc.

This document contains information that is proprietary to MediaTek Inc. (“MediaTek”) and/or its licensor(s).
Any unauthorized use, reproduction or disclosure of this document in whole or in part is strictly prohibited.

Module name: PMIC_REG Base address: (+0h)

F3	VUSBLDOBF0	8	VUSBLDOBF0
F5	VUSBPSI0	8	VUSB LDO PSI register0
F6	VUSBPSI1	8	VUSB LDO PSI register1
F7	VDIG18LDO0	8	VDIG18LDO0
FB	VDIG18LDOBF0	8	VDIG18LDOBF0
FD	VCLDO0	8	VCORE LDO register 0
FE	VCLDO1	8	VCORE LDO register 1
101	VCLDOBF0	8	VCORE LDO buffer register 0
103	VCLDOPSI0	8	VCORE LDO PSI register 0
104	VCLDOPSI1	8	VCORE LDO PSI register 1
105	VCLDOPSI2	8	VCORE LDO PSI register 2
106	VCLDOPSI3	8	VCORE LDO PSI register 3
107	VCLDOPSI4	8	VCORE LDO PSI register 4
108	VCLDOPSI5	8	VCORE LDO PSI register 5
10A	VIO18LDO0	8	VIO18LDO0
10E	VIO18LDOBF0	8	VIO18LDOBF0
110	VIO18PSI0	8	VIO18 LDO PSI register0
111	VIO18PSI1	8	VIO18 LDO PSI register1
113	VSFLDO0	8	VSFLDO0
114	VSFLDO1	8	VSFLDO1
117	VSFLDOBF0	8	VSFLDOBF0
119	VSFPSI0	8	VSF LDO PSI register0
11A	VSFPSI1	8	VSF LDO PSI register1
11C	SMPSCTL0	8	SMPS Control Register 0
121	SMPSANA3	8	SMPS Analog Control Register 3
135	VCBUCK19	8	VCORE BUCK register 19
13E	VCBUCKPSI0	8	VCORE BUCK PSI register 0
13F	VCBUCKPSI1	8	VCORE BUCK PSI register 1
140	VCBUCKPSI2	8	VCORE BUCK PSI register 2
200	AUXADC_ADC0	8	AUXADC ADC register 0
201	AUXADC_ADC0_H	8	AUXADC ADC register 0_H
202	AUXADC_ADC1	8	AUXADC ADC register 1
203	AUXADC_ADC1_H	8	AUXADC ADC register 1_H
204	AUXADC_ADC2	8	AUXADC ADC register 2
205	AUXADC_ADC2_H	8	AUXADC ADC register 2_H
206	AUXADC_ADC3	8	AUXADC ADC register 3
207	AUXADC_ADC3_H	8	AUXADC ADC register 3_H
208	AUXADC_ADC4	8	AUXADC ADC register 4
209	AUXADC_ADC4_H	8	AUXADC ADC register 4_H

© 2015 - 2017 MediaTek Inc.

This document contains information that is proprietary to MediaTek Inc. ("MediaTek") and/or its licensor(s).
Any unauthorized use, reproduction or disclosure of this document in whole or in part is strictly prohibited.

Module name: PMIC_REG Base address: (+0h)

21A	AUXADC_ADC_13	8	AUXADC ADC register 13
21B	AUXADC_ADC_13_H	8	AUXADC ADC register 13_H
21C	AUXADC_ADC_14	8	AUXADC ADC register 14
21D	AUXADC_ADC_14_H	8	AUXADC ADC register 14_H
21E	AUXADC_ADC_15	8	AUXADC ADC register 15
21F	AUXADC_ADC_15_H	8	AUXADC ADC register 15_H
226	AUXADC_ADC_19	8	AUXADC ADC register 19
227	AUXADC_ADC_19_H	8	AUXADC ADC register 19_H
228	AUXADC_ADC_20	8	AUXADC ADC register 20
229	AUXADC_ADC_20_H	8	AUXADC ADC register 20_H
22A	AUXADC_ADC_21	8	AUXADC ADC register 21
22B	AUXADC_ADC_21_H	8	AUXADC ADC register 21_H
22C	AUXADC_ADC_22	8	AUXADC ADC register 22
22D	AUXADC_ADC_22_H	8	AUXADC ADC register 22_H
22E	AUXADC_ADC_23	8	AUXADC ADC register 23
22F	AUXADC_ADC_23_H	8	AUXADC ADC register 23_H
230	AUXADC_ADC_24	8	AUXADC ADC register 24
231	AUXADC_ADC_24_H	8	AUXADC ADC register 24_H
232	AUXADC_ADC_25	8	AUXADC ADC register 25
233	AUXADC_ADC_25_H	8	AUXADC ADC register 25_H
234	AUXADC_ADC_26	8	AUXADC ADC register 26
235	AUXADC_ADC_26_H	8	AUXADC ADC register 26_H
236	AUXADC_ADC_27	8	AUXADC ADC register 27
237	AUXADC_ADC_27_H	8	AUXADC ADC register 27_H
238	AUXADC_ADC_28	8	AUXADC ADC register 28
239	AUXADC_ADC_28_H	8	AUXADC ADC register 28_H
23A	AUXADC_ADC_29	8	AUXADC ADC register 29
23B	AUXADC_ADC_29_H	8	AUXADC ADC register 29_H

© 2015 - 2017 MediaTek Inc.

This document contains information that is proprietary to MediaTek Inc. ("MediaTek") and/or its licensor(s).
Any unauthorized use, reproduction or disclosure of this document in whole or in part is strictly prohibited.

Module name: PMIC_REG Base address: (+0h)

23C	AUXADC_ADC30	8	AUXADC ADC register 30
23D	AUXADC_ADC30_H	8	AUXADC1 ADC register 0_H
23E	AUXADC_ADC31	8	AUXADC ADC register 31
23F	AUXADC_ADC31_H	8	AUXADC1 ADC register 1_H
240	AUXADC_ADC32	8	AUXADC ADC register 32
241	AUXADC_ADC32_H	8	AUXADC1 ADC register 2_H
242	AUXADC_ADC33	8	AUXADC ADC register 33
243	AUXADC_ADC33_H	8	AUXADC1 ADC register 3_H
244	AUXADC_ADC34	8	AUXADC ADC register 34
245	AUXADC_ADC34_H	8	AUXADC1 ADC register 4_H
246	AUXADC_ADC35	8	AUXADC ADC register 35
247	AUXADC_ADC35_H	8	AUXADC ADC register 33_H
248	AUXADC_ADC36	8	AUXADC ADC register 36
249	AUXADC_ADC36_H	8	AUXADC ADC register _H
24A	AUXADC_ADC37	8	AUXADC ADC register 37
24B	AUXADC_ADC37_H	8	AUXADC1 ADC register _H
24C	AUXADC_ADC38	8	AUXADC ADC register 34_H
24D	AUXADC_ADC38_H	8	AUXADC1 ADC register 34_H
24E	AUXADC_STA0	8	AUXADC_STA0
24F	AUXADC_STA0_H	8	AUXADC_STA0_H
250	AUXADC_STA1	8	AUXADC_STA1
251	AUXADC_STA1_H	8	AUXADC_STA1_H
2BE	AUXADC_LBAT2_4	8	AUXADC_LBAT2_4
2BF	AUXADC_LBAT2_4_H	8	AUXADC_LBAT2_4_H
2C0	AUXADC_LBAT2_5	8	AUXADC_LBAT2_5
2C1	AUXADC_LBAT2_5_H	8	AUXADC_LBAT2_5_H
2EF	VBTLDO0	8	VBT LDO register 0
2F3	VBTLDOBF0	8	VBT LDO buffer register 0
2F5	VBTPSI0	8	VBTP LDO PSI register0

© 2015 - 2017 MediaTek Inc.

This document contains information that is proprietary to MediaTek Inc. ("MediaTek") and/or its licensor(s).
Any unauthorized use, reproduction or disclosure of this document in whole or in part is strictly prohibited.

Module name: PMIC_REG Base address: (+0h)

2F6	VBTPSI1	8	VBTP LDO PSI register1
2F8	VALDO0	8	VA LDO register 0
2FC	VALDOBF0	8	VA LDO buffer register 0
2FE	VAPSI0	8	VA LDO PSI register0
2FF	VAPSI1	8	VA LDO PSI register1
300	VCAMACTL0	8	VCAMA Control register 0
302	VCAMALDO0	8	VCAMALDO0
303	VCAMALDO1	8	VCAMA LDO register 1
306	VCAMALDOBF0	8	VCAMA LDO buffer register 0
30A	PSWCTL0	8	PSW Control register 0
30F	SWIO18PSI	8	SWIO18 LDO PSI register
313	VIO28LDO0	8	VIO28LDO0
317	VIO28LDOBF0	8	VIO28LDOBF0
319	VIO28PSI0	8	VIO28 LDO PSI register0
31A	VIO28PSI1	8	VIO28 LDO PSI register1
31C	VMCLDO0	8	VMCLDO0
31D	VMCLDO1	8	VMCLDO1
320	VMCLDOBF0	8	VMCLDOBF0
322	VMCPSI0	8	VMC LDO PSI register0
323	VMCPSI1	8	VMC LDO PSI register1
324	VIBRCTL0	8	VIBR Control register 0
326	VIBRLDO0	8	VIBRLDO0
327	VIBRLDO1	8	VIBRLDO1
32A	VIBRLDOBF0	8	VIBRLDOBF0
32C	ISINK0_CON0	8	ISINK0 Control Register 0
32D	ISINK0_CON1	8	ISINK0 Control Register 1
32E	ISINK0_CON2	8	ISINK0 Control Register 2
330	ISINK0_CON4	8	ISINK0 Control Register 4
331	ISINK0_CON5	8	ISINK0 Control Register 5
332	ISINK0_CON6	8	ISINK0 Control Register 6
333	ISINK1_CON0	8	ISINK1 Control Register 0
334	ISINK1_CON1	8	ISINK1 Control Register 1
335	ISINK1_CON2	8	ISINK1 Control Register 2
337	ISINK1_CON4	8	ISINK1 Control Register 4
338	ISINK1_CON5	8	ISINK1 Control Register 5
339	ISINK1_CON6	8	ISINK1 Control Register 6
33A	ISINK2_CON1	8	ISINK2 Control Register 1
33C	ISINK3_CON1	8	ISINK3 Control Register 1
33F	ISINK_ANA0_H	8	ISINKS ACD Interface 0 High
344	ISINK_EN_CTRL_Low	8	ISINK Enable control Low
345	ISINK_EN_CTRL_High	8	ISINK Enable control High
346	ISINK_MODE_CTRL	8	ISINK mode control

© 2015 - 2017 MediaTek Inc.

This document contains information that is proprietary to MediaTek Inc. (“MediaTek”) and/or its licensor(s).
Any unauthorized use, reproduction or disclosure of this document in whole or in part is strictly prohibited.

1D	RSTCFG3	Reset config 3	00

Bit	7	6	5	4	3	2	1	0
Name						WDTRSTB_STATUS		
Type						RO		
Reset						0		

Bit(s)	Name	Description
2	WDTRSTB_STATUS	**WDTRSTB reset status** 1'b0: No occured 1'b1: Occurred

1E	INTSTS0	Interrupt status/ clear 0	00

Bit	7	6	5	4	3	2	1	0
Name	ints_dldo_pg_f	ints_dldo_pg_r	ints_dldo_oc_f	ints_dldo_oc_r	ints_aldo_pg_f	ints_aldo_pg_r	ints_aldo_oc_f	ints_aldo_oc_r
Type	W1C	W1C	W1C	W1C	W1C	W1C	W1C	W1C
Reset	0	0	0	0	0	0	0	0

Bit(s)	Name	Description
7	ints_dldo_pg_f	
6	ints_dldo_pg_r	
5	ints_dldo_oc_f	
4	ints_dldo_oc_r	
3	ints_aldo_pg_f	
2	ints_aldo_pg_r	
1	ints_aldo_oc_f	
0	ints_aldo_oc_r	

1F	INTSTS1	Interrupt status/ clear 1	00

Bit	7	6	5	4	3	2	1	0
Name	ints_pkeylp_f	ints_pkeylp_r	ints_vc_ldo_oc_f	ints_vc_ldo_oc_r	ints_vcore_pg_f	ints_vcore_pg_r	ints_vc_buck_oc_f	ints_vc_buck_oc_r
Type	W1C	W1C	W1C	W1C	W1C	W1C	W1C	W1C
Reset	0	0	0	0	0	0	0	0

Bit(s)	Name	Description
7	ints_pkeylp_f	
6	ints_pkeylp_r	

© 2015 - 2017 MediaTek Inc.

This document contains information that is proprietary to MediaTek Inc. ("MediaTek") and/or its licensor(s).
Any unauthorized use, reproduction or disclosure of this document in whole or in part is strictly prohibited.

Bit(s)	Name	Description
5	ints_vc_ldo_oc_f	
4	ints_vc_ldo_oc_r	
3	ints_vcore_pg_f	
2	ints_vcore_pg_r	
1	ints_vc_buck_oc_f	
0	ints_vc_buck_oc_r	

20 **INTSTS2** **Interrupt status/ clear 2** **00**

Bit	7	6	5	4	3	2	1	0
Name	**ints_pwrkey_f**	**ints_pwrkey_r**	**ints_axpkey_f**	**ints_axpkey_r**	**ints_thm2_f**	**ints_thm2_r**	**ints_thm1_f**	**ints_thm1_r**
Type	W1C	W1C	W1C	W1C	W1C	W1C	W1C	W1C
Reset	0	0	0	0	0	0	0	0

Bit(s)	Name	Description
7	ints_pwrkey_f	
6	ints_pwrkey_r	
5	ints_axpkey_f	
4	ints_axpkey_r	
3	ints_thm2_f	
2	ints_thm2_r	
1	ints_thm1_f	
0	ints_thm1_r	

21 **INTSTS3** **Interrupt status/ clear 3** **00**

Bit	7	6	5	4	3	2	1	0
Name	**ints_thr_l_f**	**ints_thr_l_r**	**ints_thr_h_f**	**ints_thr_h_r**	**ints_chrdet_f**	**ints_chrdet_r**	**ints_chgov_f**	**ints_chgov_r**
Type	W1C	W1C	W1C	W1C	W1C	W1C	W1C	W1C
Reset	0	0	0	0	0	0	0	0

Bit(s)	Name	Description
7	ints_thr_l_f	
6	ints_thr_l_r	
5	ints_thr_h_f	
4	ints_thr_h_r	
3	ints_chrdet_f	
2	ints_chrdet_r	
1	ints_chgov_f	
0	ints_chgov_r	

© 2015 - 2017 MediaTek Inc.

This document contains information that is proprietary to MediaTek Inc. ("MediaTek") and/or its licensor(s).
Any unauthorized use, reproduction or disclosure of this document in whole or in part is strictly prohibited.

22 **INTSTS4** **Interrupt status/ clear 4** **00**

Bit	7	6	5	4	3	2	1	0
Name			ints_psw_pg_f	ints_psw_pg_r	ints_over40_f	ints_over40_r	ints_over110_f	ints_over110_r
Type			W1C	W1C	W1C	W1C	W1C	W1C
Reset			0	0	0	0	0	0

Bit(s)	Name	Description
5	ints_psw_pg_f	
4	ints_psw_pg_r	
3	ints_over40_f	
2	ints_over40_r	
1	ints_over110_f	
0	ints_over110_r	

23 **INTSTS5** **Interrupt status/ clear 5** **00**

Bit	7	6	5	4	3	2	1	0
Name	ints_warm_lv	ints_hot_lv	ints_chrwdt_lv	ints_bvalid_det_lv	ints_vbat_undet_lv	ints_vbaton_hv_lv	ints_bat_l_lv	ints_bat_h_lv
Type	W1C	W1C	W1C	W1C	W1C	W1C	W1C	W1C
Reset	0	0	0	0	0	0	0	0

Bit(s)	Name	Description
7	ints_warm_lv	
6	ints_hot_lv	
5	ints_chrwdt_lv	
4	ints_bvalid_det_lv	
3	ints_vbat_undet_lv	
2	ints_vbaton_hv_lv	
1	ints_bat_l_lv	
0	ints_bat_h_lv	

24 **INTSTS6** **Interrupt status/ clear 6** **00**

Bit	7	6	5	4	3	2	1	0
Name				ints_ad_lbat_lv	ints_nag_c_lv	ints_imp_lv	ints_cold_lv	ints_cool_lv
Type				W1C	W1C	W1C	W1C	W1C
Reset				0	0	0	0	0

© 2015 - 2017 MediaTek Inc.

This document contains information that is proprietary to MediaTek Inc. ("MediaTek") and/or its licensor(s).
Any unauthorized use, reproduction or disclosure of this document in whole or in part is strictly prohibited.

Bit(s)	Name	Description
4	ints_ad_lbat_lv	
3	ints_nag_c_lv	
2	ints_imp_lv	
1	ints_cold_lv	
0	ints_cool_lv	

25 **INTEN0** **Interrupt enable 0** **00**

Bit	7	6	5	4	3	2	1	0
Name	inte_dldo_pg_f	inte_dldo_pg_r	inte_dldo_oc_f	inte_dldo_oc_r	inte_aldo_pg_f	inte_aldo_pg_r	inte_aldo_oc_f	inte_aldo_oc_r
Type	RW	RW	RW	RW	RW	RW	RW	RW
Reset	0	0	0	0	0	0	0	0

Bit(s)	Name	Description
7	inte_dldo_pg_f	
6	inte_dldo_pg_r	
5	inte_dldo_oc_f	
4	inte_dldo_oc_r	
3	inte_aldo_pg_f	
2	inte_aldo_pg_r	
1	inte_aldo_oc_f	
0	inte_aldo_oc_r	

26 **INTEN1** **Interrupt enable 1** **00**

Bit	7	6	5	4	3	2	1	0
Name	inte_pkeylp_f	inte_pkeylp_r	inte_vc_ldo_oc_f	inte_vc_ldo_oc_r	inte_vcore_pg_f	inte_vcore_pg_r	inte_vc_buck_oc_f	inte_vc_buck_oc_r
Type	RW	RW	RW	RW	RW	RW	RW	RW
Reset	0	0	0	0	0	0	0	0

Bit(s)	Name	Description
7	inte_pkeylp_f	
6	inte_pkeylp_r	
5	inte_vc_ldo_oc_f	
4	inte_vc_ldo_oc_r	
3	inte_vcore_pg_f	
2	inte_vcore_pg_r	
1	inte_vc_buck_oc_f	
0	inte_vc_buck_oc_r	

© 2015 - 2017 MediaTek Inc.

This document contains information that is proprietary to MediaTek Inc. (“MediaTek”) and/or its licensor(s).
Any unauthorized use, reproduction or disclosure of this document in whole or in part is strictly prohibited.

27 **INTEN2** **Interrupt enable 2** **00**

Bit	7	6	5	4	3	2	1	0
Name	inte_pwrkey_f	inte_pwrkey_r	inte_axpkey_f	inte_axpkey_r	inte_thm2_f	inte_thm2_r	inte_thm1_f	inte_thm1_r
Type	RW	RW	RW	RW	RW	RW	RW	RW
Reset	0	0	0	0	0	0	0	0

Bit(s)	Name	Description
7	inte_pwrkey_f	
6	inte_pwrkey_r	
5	inte_axpkey_f	
4	inte_axpkey_r	
3	inte_thm2_f	**Thermal interrupt 1 falling: T < 40**
2	inte_thm2_r	**Thermal interrupt 1 rising: T > 55**
1	inte_thm1_f	**Thermal interrupt 1 falling: T < 110**
0	inte_thm1_r	**Thermal interrupt 1 rising: T > 125**

28 **INTEN3** **Interrupt enable 3** **00**

Bit	7	6	5	4	3	2	1	0
Name	inte_thr_l_f	inte_thr_l_r	inte_thr_h_f	inte_thr_h_r	inte_chrdet_f	inte_chrdet_r	inte_chgov_f	inte_chgov_r
Type	RW	RW	RW	RW	RW	RW	RW	RW
Reset	0	0	0	0	0	0	0	0

Bit(s)	Name	Description
7	inte_thr_l_f	
6	inte_thr_l_r	
5	inte_thr_h_f	
4	inte_thr_h_r	
3	inte_chrdet_f	
2	inte_chrdet_r	
1	inte_chgov_f	
0	inte_chgov_r	

29 **INTEN4** **Interrupt enable 4** **00**

Bit	7	6	5	4	3	2	1	0
Name			inte_psw_pg_f	inte_psw_pg_r	inte_over40_f	inte_over40_r	inte_over110_f	inte_over110_r
Type			RW	RW	RW	RW	RW	RW
Reset			0	0	0	0	0	0

© 2015 - 2017 MediaTek Inc.

This document contains information that is proprietary to MediaTek Inc. ("MediaTek") and/or its licensor(s).
Any unauthorized use, reproduction or disclosure of this document in whole or in part is strictly prohibited.

Bit(s)	Name	Description
5	inte_psw_pg_f	
4	inte_psw_pg_r	
3	inte_over40_f	
2	inte_over40_r	
1	inte_over110_f	
0	inte_over110_r	

2A **INTEN5** **Interrupt enable 5** **00**

Bit	7	6	5	4	3	2	1	0
Name	**inte_warm_lv**	**inte_hot_lv**	**inte_chrwdt_lv**	**inte_bvalid_det_lv**	**inte_vbat_undet_lv**	**inte_vbaton_hv_lv**	**inte_bat_l_lv**	**inte_bat_h_lv**
Type	RW	RW	RW	RW	RW	RW	RW	RW
Reset	0	0	0	0	0	0	0	0

Bit(s)	Name	Description
7	inte_warm_lv	
6	inte_hot_lv	
5	inte_chrwdt_lv	
4	inte_bvalid_det_lv	
3	inte_vbat_undet_lv	
2	inte_vbaton_hv_lv	
1	inte_bat_l_lv	
0	inte_bat_h_lv	

2B **INTEN6** **Interrupt enable 6** **00**

Bit	7	6	5	4	3	2	1	0
Name				**inte_ad_lbat_lv**	**inte_nag_c_lv**	**inte_imp_lv**	**inte_cold_lv**	**inte_cool_lv**
Type				RW	RW	RW	RW	RW
Reset				0	0	0	0	0

Bit(s)	Name	Description
4	inte_ad_lbat_lv	
3	inte_nag_c_lv	
2	inte_imp_lv	
1	inte_cold_lv	
0	inte_cool_lv	

© 2015 - 2017 MediaTek Inc.

This document contains information that is proprietary to MediaTek Inc. ("MediaTek") and/or its licensor(s).
Any unauthorized use, reproduction or disclosure of this document in whole or in part is strictly prohibited.

2C **INTMISC** **interrupt misc register** **00**

Bit	7	6	5	4	3	2	1	0
Name							rg_intr_mode_sel	polarity
Type							RW	RW
Reset							0	0

Bit(s)	Name	Description
1	rg_intr_mode_sel	
0	polarity	

2D **PONSTS** **Power on source record register** **00**

Bit	7	6	5	4	3	2	1	0
Name				STS_RBOOT	STS_SPAR	STS_CHRIN	STS_RTCA	STS_PWRKEY
Type				RO	RO	RO	RO	RO
Reset				0	0	0	0	0

Bit(s)	Name	Description
4	STS_RBOOT	**Power on for cold reset**
3	STS_SPAR	**Power on for SPAR event**
2	STS_CHRIN	**Power on for charger insertion**
1	STS_RTCA	**Power on for RTC alarm**
0	STS_PWRKEY	**Power on for PWREKY press**

2E **POFFSTS** **Power off source record register** **00**

Bit	7	6	5	4	3	2	1	0
Name	STS_NORMOFF	STS_PKEYLP	STS_CRST	STS_WRST	STS_THRDN	STS_PSOC	STS_PGFAIL	STS_UVLO
Type	RO	RO	RO	RO	RO	RO	RO	RO
Reset	0	0	0	0	0	0	0	0

Bit(s)	Name	Description
7	STS_NORMOFF	**Power off for PWRHOLD clear**
6	STS_PKEYLP	**Power off for power key(s) long press**
5	STS_CRST	**Power off for cold reset**
4	STS_WRST	**Power reset for warm reset**

© 2015 - 2017 MediaTek Inc.

This document contains information that is proprietary to MediaTek Inc. ("MediaTek") and/or its licensor(s).
Any unauthorized use, reproduction or disclosure of this document in whole or in part is strictly prohibited.

Bit(s)	Name	Description
3	STS_THRDN	**Power off for thermal shutdown**
2	STS_PSOC	**Power off for SOC WDT reset**
1	STS_PGFAIL	**Power off for PWRGOOD failure**
0	STS_UVLO	**Power off for UVLO event**

2F **PDNSTS0** **Power exception shutdown status 0** **00**

Bit	7	6	5	4	3	2	1	0
Name		**STS_PDN_VSF_PG**	**STS_PDN_VIO18_PG**	**STS_PDN_VCORE_PG**	**STS_PDN_VA18_PG**	**STS_PDN_VCAMA_PG**	**STS_PDN_VA_PG**	**STS_PDN_VBT_PG**
Type		RO	RO	RO	RO	RO	RO	RO
Reset		0	0	0	0	0	0	0

Bit(s)	Name	Description
6	STS_PDN_VSF_PG	**Log the shutdown PG**
5	STS_PDN_VIO18_PG	**Log the shutdown PG**
4	STS_PDN_VCORE_PG	**Log the shutdown PG**
3	STS_PDN_VA18_PG	**Log the shutdown PG**
2	STS_PDN_VCAMA_PG	**Log the shutdown PG**
1	STS_PDN_VA_PG	**Log the shutdown PG**
0	STS_PDN_VBT_PG	**Log the shutdown PG**

30 **PDNSTS1** **Power exception shutdown status 1** **00**

Bit	7	6	5	4	3	2	1	0
Name	**STS_PDN_SWBAT_PG**	**STS_PDN_VIBR_PG**	**STS_PDN_VUSB_PG**	**STS_PDN_VMC_PG**	**STS_PDN_SWMP_PG**	**STS_PDN_VIO28_PG**	**STS_PDN_SWDP_PG**	**STS_PDN_SWXM_PG**
Type	RO	RO	RO	RO	RO	RO	RO	RO
Reset	0	0	0	0	0	0	0	0

Bit(s)	Name	Description
7	STS_PDN_SWBAT_PG	**Log the shutdown PG**
6	STS_PDN_VIBR_PG	**Log the shutdown PG**
5	STS_PDN_VUSB_PG	**Log the shutdown PG**

© 2015 - 2017 MediaTek Inc.

This document contains information that is proprietary to MediaTek Inc. (“MediaTek”) and/or its licensor(s).
Any unauthorized use, reproduction or disclosure of this document in whole or in part is strictly prohibited.

Bit(s)	Name	Description
4	STS_PDN_VMC_PG	**Log the shutdown PG**
3	STS_PDN_SWMP_PG	**Log the shutdown PG**
2	STS_PDN_VIO28_PG	**Log the shutdown PG**
1	STS_PDN_SWDP_PG	**Log the shutdown PG**
0	STS_PDN_SWXM_PG	**Log the shutdown PG**

31 **PDNSTS2** **Power exception shutdown status 2** **00**

Bit	7	6	5	4	3	2	1	0
Name			**STS_PDN_VIO18_OC**	**STS_PDN_VCORE_LDO_OC**	**STS_PDN_VCORE_BUCK_OC**	**STS_PDN_VIO28_OC**	**STS_PDN_VA_OC**	**STS_PDN_VMC_OC**
Type			RO	RO	RO	RO	RO	RO
Reset			0	0	0	0	0	0

Bit(s)	Name	Description
5	STS_PDN_VIO18_OC	**Log the shutdown OC**
4	STS_PDN_VCORE_LDO_OC	**Log the shutdown OC**
3	STS_PDN_VCORE_BUCK_OC	**Log the shutdown OC**
2	STS_PDN_VIO28_OC	**Log the shutdown OC**
1	STS_PDN_VA_OC	**Log the shutdown OC**
0	STS_PDN_VMC_OC	**Log the shutdown OC**

32 **PSSTS0** **Power supply status 0 register** **00**

Bit	7	6	5	4	3	2	1	0
Name		**STS_VA18_ENA**	**STS_VA_ENA**	**STS_VBT_ENA**	**STS_VCAMA_ENA**	**STS_VUSB_ENA**	**STS_OSC_EN**	**STS_IVGEN_EN**
Type		RO	RO	RO	RO	RO	RO	RO
Reset		0	0	0	0	0	0	0

Bit(s)	Name	Description
6	STS_VA18_ENA	
5	STS_VA_ENA	

This document contains information that is proprietary to MediaTek Inc. ("MediaTek") and/or its licensor(s).
Any unauthorized use, reproduction or disclosure of this document in whole or in part is strictly prohibited.

Bit(s)	Name	Description
4	STS_VBT_ENA	
3	STS_VCAMA_ENA	
2	STS_VUSB_ENA	
1	STS_OSC_EN	
0	STS_IVGEN_EN	

33 **PSSTS1** **Power supply status 1 register** **00**

Bit	7	6	5	4	3	2	1	0
Name		**STS_VIBR_ENA**	**STS_VMC_ENA**	**STS_VIO28_ENA**	**STS_VSF_ENA**	**STS_VIO18_ENA**	**STS_VC_LDO_ENA**	**STS_VC_BUCK_ENA**
Type		RO	RO	RO	RO	RO	RO	RO
Reset		0	0	0	0	0	0	0

Bit(s)	Name	Description
6	STS_VIBR_ENA	
5	STS_VMC_ENA	
4	STS_VIO28_ENA	
3	STS_VSF_ENA	
2	STS_VIO18_ENA	
1	STS_VC_LDO_ENA	
0	STS_VC_BUCK_ENA	

34 **PSSTS2** **Power supply status 2 register** **00**

Bit	7	6	5	4	3	2	1	0
Name		**PKEYLP_VAL**	**AXPKEY_VAL**	**PWRKEY_VAL**	**STS_SWMP_ENA**	**STS_SWDP_ENA**	**STS_SWXM_ENA**	**STS_SWBAT_ENA**
Type		RO	RO	RO	RO	RO	RO	RO
Reset		0	0	0	0	0	0	0

Bit(s)	Name	Description
6	PKEYLP_VAL	
5	AXPKEY_VAL	
4	PWRKEY_VAL	
3	STS_SWMP_ENA	
2	STS_SWDP_ENA	
1	STS_SWXM_ENA	
0	STS_SWBAT_ENA	

© 2015 - 2017 MediaTek Inc.

This document contains information that is proprietary to MediaTek Inc. (“MediaTek”) and/or its licensor(s).
Any unauthorized use, reproduction or disclosure of this document in whole or in part is strictly prohibited.

35	PSOCSTS0	Power supply Overcurrent status 0 register	00

Bit	7	6	5	4	3	2	1	0
Name		STS_VSF_OC	STS_VIO18_OC	STS_VC_LDO_OC	STS_VC_BUCK_OC	STS_VA18_OC	STS_VA_OC	STS_VBT_OC
Type		RO	RO	RO	RO	RO	RO	RO
Reset		0	0	0	0	0	0	0

Bit(s)	Name	Description
6	STS_VSF_OC	
5	STS_VIO18_OC	
4	STS_VC_LDO_OC	
3	STS_VC_BUCK_OC	
2	STS_VA18_OC	
1	STS_VA_OC	
0	STS_VBT_OC	

36	PSOCSTS1	Power supply Overcurrent status 1 register	00

Bit	7	6	5	4	3	2	1	0
Name				STS_VIBR_OC	STS_VCAMA_OC	STS_VUSB_OC	STS_VMC_OC	STS_VIO28_OC
Type				RO	RO	RO	RO	RO
Reset				0	0	0	0	0

Bit(s)	Name	Description
4	STS_VIBR_OC	
3	STS_VCAMA_OC	
2	STS_VUSB_OC	
1	STS_VMC_OC	
0	STS_VIO28_OC	

© 2015 - 2017 MediaTek Inc.

This document contains information that is proprietary to MediaTek Inc. ("MediaTek") and/or its licensor(s).
Any unauthorized use, reproduction or disclosure of this document in whole or in part is strictly prohibited.

37	PSPGSTS0	Power supply PWRGOOD status 0 register	00

Bit	7	6	5	4	3	2	1	0
Name		STS_VSF_PG	STS_VIO18_PG	STS_VCORE_PG	STS_VA18_PG	STS_VCAMA_PG	STS_VA_PG	STS_VBT_PG
Type		RO	RO	RO	RO	RO	RO	RO
Reset		0	0	0	0	0	0	0

Bit(s)	Name	Description
6	STS_VSF_PG	
5	STS_VIO18_PG	
4	STS_VCORE_PG	
3	STS_VA18_PG	
2	STS_VCAMA_PG	
1	STS_VA_PG	
0	STS_VBT_PG	

38	PSPGSTS1	Power supply PWRGOOD status 1 register	00

Bit	7	6	5	4	3	2	1	0
Name	STS_SWBAT_PG	STS_VIBR_PG	STS_VUSB_PG	STS_VMC_PG	STS_SWMP_PG	STS_VIO28_PG	STS_SWDP_PG	STS_SWXM_PG
Type	RO	RO	RO	RO	RO	RO	RO	RO
Reset	0	0	0	0	0	0	0	0

Bit(s)	Name	Description
7	STS_SWBAT_PG	
6	STS_VIBR_PG	
5	STS_VUSB_PG	
4	STS_VMC_PG	
3	STS_SWMP_PG	
2	STS_VIO28_PG	
1	STS_SWDP_PG	
0	STS_SWXM_PG	

© 2015 - 2017 MediaTek Inc.

This document contains information that is proprietary to MediaTek Inc. ("MediaTek") and/or its licensor(s).
Any unauthorized use, reproduction or disclosure of this document in whole or in part is strictly prohibited.

39	PSOMSTS0	Power supply Operational mode status 0 register	00

Bit	7	6	5	4	3	2	1	0
Name		STS_VA18_OPMOD	STS_VCAMA_OPMOD		STS_VA_OPMOD		STS_VBT_OPMOD	
Type		RO	RO		RO		RO	
Reset		0	0	0	0	0	0	0

Bit(s)	Name	Description
6	STS_VA18_OPMOD	
5:4	STS_VCAMA_OPMOD	
3:2	STS_VA_OPMOD	
1:0	STS_VBT_OPMOD	

3A	PSOMSTS1	Power supply Operational mode status 1 register	00

Bit	7	6	5	4	3	2	1	0
Name	STS_VSF_OPMOD		STS_VIO18_OPMOD		STS_VC_LDO_OPMOD		STS_VDIG18_OPMOD	
Type	RO		RO		RO		RO	
Reset	0	0	0	0	0	0	0	0

Bit(s)	Name	Description
7:6	STS_VSF_OPMOD	
5:4	STS_VIO18_OPMOD	
3:2	STS_VC_LDO_OPMOD	
1:0	STS_VDIG18_OPMOD	

© 2015 - 2017 MediaTek Inc.

This document contains information that is proprietary to MediaTek Inc. ("MediaTek") and/or its licensor(s).
Any unauthorized use, reproduction or disclosure of this document in whole or in part is strictly prohibited.

3B	PSOMSTS2	Power supply Operational mode status 2 register	00

Bit	7	6	5	4	3	2	1	0
Name	STS_VIBR_OPMOD		STS_VUSB_OPMOD		STS_VMC_OPMOD		STS_VIO28_OPMOD	
Type	RO		RO		RO		RO	
Reset	0	0	0	0	0	0	0	0

Bit(s)	Name	Description
7:6	STS_VIBR_OPMOD	
5:4	STS_VUSB_OPMOD	
3:2	STS_VMC_OPMOD	
1:0	STS_VIO28_OPMOD	

3C	THMSTS	Thermal Status	00

Bit	7	6	5	4	3	2	1	0
Name			STS_THM_DEB_STS	STS_THM_RAW_STS	STS_THM_OVER125	STS_THM_OVER110	STS_THM_OVER55	STS_THM_OVER40
Type			RO	RO	RO	RO	RO	RO
Reset			0	0	0	0	0	0

Bit(s)	Name	Description
5	STS_THM_DEB_STS	
4	STS_THM_RAW_STS	
3	STS_THM_OVER125	
2	STS_THM_OVER110	
1	STS_THM_OVER55	
0	STS_THM_OVER40	

3D	WKFG_STS	Wake Up Fuel Gauge Status	00

Bit	7	6	5	4	3	2	1	0
Name								STS_WKUP_FG_DONE
Type								W1C
Reset								0

© 2015 - 2017 MediaTek Inc.
This document contains information that is proprietary to MediaTek Inc. ("MediaTek") and/or its licensor(s).
Any unauthorized use, reproduction or disclosure of this document in whole or in part is strictly prohibited.

Bit(s)	Name	Description
0	STS_WKUP_FG_DONE	

40 **PSICTL** **PSI control register** **01**

Bit	7	6	5	4	3	2	1	0
Name					RG_HNDOVR_LEN			RG_PSIOVR
Type					RW			RW
Reset					0	0		1

Bit(s)	Name	Description
3:2	RG_HNDOVR_LEN	**VR handover time interval selection** 00: 2T*32K 01: 3T*32K 10: 4T*32K 11: 5T*32K
0	RG_PSIOVR	**PSI overwrite enable** 0: disable 1: enable

41 **PSISTS** **PSI status register** **00**

Bit	7	6	5	4	3	2	1	0
Name	RGS_PSI_STS							
Type	RO							
Reset	0	0						

Bit(s)	Name	Description
7:6	RGS_PSI_STS	**PSI bus status**

48 **PPCCFG0** **PPC configuration 0 register** **3B**

Bit	7	6	5	4	3	2	1	0
Name					RG_WDTRST_ACT			
Type					RW			
Reset					1	0		

Bit(s)	Name	Description
3:2	RG_WDTRST_ACT	**reg/warm reset may trigger VSF/SWXM power recycle. If VSF/SWXM power recycle is triggered, the warm reset timing is**

This document contains information that is proprietary to MediaTek Inc. (“MediaTek”) and/or its licensor(s).
Any unauthorized use, reproduction or disclosure of this document in whole or in part is strictly prohibited.

Bit(s)	Name	Description
		extended to 150ms. 00: pmic reg reset 01: warm reset 10: cold reset 11: reserved

4A **PPCCFG2** **PPC configuration 2 register** **21**

Bit	7	6	5	4	3	2	1	0
Name						RG_XRST_ACT		
Type						RW		
Reset						0		

Bit(s)	Name	Description
2	RG_XRST_ACT	**Response for EXTRSTB assertion during active modes** 0: Warm reset 1: Cold reset

4B **PPCCTL0** **PPC control 0 register** **00**

Bit	7	6	5	4	3	2	1	0
Name			RG_CRST	RG_WRST				
Type			RW	RW				
Reset			0	0				

Bit(s)	Name	Description
5	RG_CRST	**Issue cold reset**
4	RG_WRST	**Issue warm reset**

4D **SHDNCFG1** **Shutdown configuration 1 register** **08**

Bit	7	6	5	4	3	2	1	0
Name					RG_PKEY_LTIME			
Type					RW			
Reset					1	0		

This document contains information that is proprietary to MediaTek Inc. ("MediaTek") and/or its licensor(s).
Any unauthorized use, reproduction or disclosure of this document in whole or in part is strictly prohibited.

Bit(s)	Name	Description
3:2	RG_PKEY_LTIME	**PWRKEY long press shutdown timing selection. (typical value)** 00: 5 sec 01: 7 sec 10: 8 sec 11: 11 sec

87 **CHR_CON0** **Charger control register 0** **01**

Bit	7	6	5	4	3	2	1	0
Name	RGS_VCDT_HV_DET	RGS_VCDT_LV_DET	RGS_CHRDET	RG_NORM_CHR_EN	RG_CSDAC_EN		RGS_CHR_LDO_DET	RG_VCDT_HV_EN
Type	RO	RO	RO	RW	RW		RO	RW
Reset	0	0	0	0	0		0	1

Bit(s)	Name	Description
7	RGS_VCDT_HV_DET	**Charger-in high voltage detection (with de-bounce).** 0: charge-in voltage < VCDT_HV_VTH 1:charge-in voltage > VCDT_HV_VTH
6	RGS_VCDT_LV_DET	**Charger-in low voltage detection (with de-bounce).** 0: charge-in voltage < VCDT_LV_VTH 1:charge-in voltage > VCDT_LV_VTH
5	RGS_CHRDET	**Charger-in detect.** 0: No valid charger detected 1: Valid charger detected
4	RG_NORM_CHR_EN	**Charger enable setting, which would gated CSDAC_EN, PCHR_AUTO and HWCV_EN** 0: Charger disabled 1: Charger enabled
3	RG_CSDAC_EN	**CS DAC enable.** 0: CS DAC disabled 1: CS DAC enabled
1	RGS_CHR_LDO_DET	**Charger LDO detection. If not detected, pulse charger cannot work.** 0: Invalid charger LDO 1: Valid charger LDO
0	RG_VCDT_HV_EN	**ChargerIn HV detection function enable (0: disable, 1: enable)**

88 **CHR_CON1** **Charger Control Register 1** **B2**

Bit	7	6	5	4	3	2	1	0
Name	RG_VCDT_HV_VTH				RG_VCDT_LV_VTH			
Type	RW				RW			
Reset	1	0	1	1	0	0	1	0

Bit(s)	Name	Description

© 2015 - 2017 MediaTek Inc.
This document contains information that is proprietary to MediaTek Inc. ("MediaTek") and/or its licensor(s).
Any unauthorized use, reproduction or disclosure of this document in whole or in part is strictly prohibited.

Bit(s)	Name	Description
7:4	RG_VCDT_HV_VTH	**ChargerIn HV detection threshold, default 4.3/9.5V for VTHL/VTHH** 0000~1000: 4.2V~4.6V with 50mV/step 1001~1100: 6V~7.5V with 500mV/step 1101~1111: 8.5V~10.5V with 1000mV/step
3:0	RG_VCDT_LV_VTH	**ChargerIn LV detection threshold, default 4.3/9.5V for VTHL/VTHH** 0000~1000: 4.2V~4.6V with 50mV/step 1001~1100: 6V~7.5V with 500mV/step 1101~1111: 8.5V~10.5V with 1000mV/step

89 **CHR_CON2** **Charger Control Register 2** **04**

Bit	7	6	5	4	3	2	1	0
Name	RGS_VBAT_CC_DET	RGS_VBAT_CV_DET	RGS_CS_DET		RG_CS_EN	RG_VBAT_CC_EN	RG_VBAT_CV_EN	
Type	RO	RO	RO		RW	RW	RW	
Reset	0	0	0		0	1	0	

Bit(s)	Name	Description
7	RGS_VBAT_CC_DET	**VBAT voltage detection for CC.** 0: VBAT voltage < VBAT_CC_VTH 1: VBAT voltage > VBAT_CC_VTH
6	RGS_VBAT_CV_DET	**VBAT voltage detection for CV.** 0: VBAT voltage < VBAT_CV_VTH 1: VBAT voltage > VBAT_CV_VTH
5	RGS_CS_DET	**Current sense voltage detection.** 0: CS voltage < CS_VTH 1: CS voltage > CS_VTH
3	RG_CS_EN	**Current sense voltage detection comparator enable.** 0: Disabled 1: Enabled
2	RG_VBAT_CC_EN	**Battery CC detection enable (0: disable, 1: enable)**
1	RG_VBAT_CV_EN	**Battery CV detection enable** 0: Disabled 1: Enabled

8A **CHR_CON3** **Charger Control Register 3** **CF**

Bit	7	6	5	4	3	2	1	0
Name	RG_VBAT_CC_VTH		RG_VBAT_NORM_CV_VTH					
Type	RW		RW					
Reset	1	1	0	0	1	1	1	1

Bit(s)	Name	Description
7:6	RG_VBAT_CC_VTH	**Battery CC dection threshold**

© 2015 - 2017 MediaTek Inc.

This document contains information that is proprietary to MediaTek Inc. ("MediaTek") and/or its licensor(s).
Any unauthorized use, reproduction or disclosure of this document in whole or in part is strictly prohibited.

Bit(s)	Name	Description
5:0	RG_VBAT_NORM_CV_VTH	00: 3.3V 01: 3.35V 10: 3.4V 11: 3.45V (default) **Battery CV dection threshold trimming option, default 4.2V** this register is used for FT CV threshold trimming and not for customer's fine tuning (pchr_dig should invert MSB bit. otherwise, BC1.1 2.2V threshold would be wrong) 000000~000011:3.5V, 3.6V, 3.7V, 3.8V 000100~000111:3.85V, 3.9V, 4V, 4.05V 001000~001011:4.1V, 4.125V, 4.1375v, 4.15V 001100~001111:4.1625V, 4.175V, 4.1875V, 4.2V (default) 010000~010011:4.2125V, 4.225V, 4.2375V, 4.25V 010100~010111:4.2625V, 4.275V, 4.2875V, 4.3V 011000~011011:4.3125V, 4.325V, 4.3375V, 4.35V 011100~011111:4.3625V, 4.375V, 4.3875V, 4.4V 100000~100011:4.4125V, 4.425V, 4.4375V, 4.45V 100100~100111:4.4625V, 4.475V, 4.4875V, 4.5V 101000:4.6V 111111:2.2V (BC1.1)

8B **CHR_CON4** **Charger Control Register 4** **0F**

Bit	7	6	5	4	3	2	1	0
Name					RG_NORM_CS_VTH			
Type					RW			
Reset					1	1	1	1

Bit(s)	Name	Description
3:0	RG_NORM_CS_VTH	**Current sense voltage detection threshold @ Rcs=65mohm** 1111: 70mA 1110: 200mA 1101: 300mA 1100: 450mA (usbdl) 1011: 550mA 1010: 650mA 1001: 700mA 1000: 800mA 0111: 900mA 0110: 1000mA 0101: 1100mA 0100: 1200mA 0011: 1350mA 0010: 1500mA 0001: 1600mA 0000: 2000mA

8D **CHR_CON6** **Charger Control Register 6** **03**

© 2015 - 2017 MediaTek Inc.
This document contains information that is proprietary to MediaTek Inc. ("MediaTek") and/or its licensor(s).
Any unauthorized use, reproduction or disclosure of this document in whole or in part is strictly prohibited.

8D **CHR_CON6** **Charger Control Register 6** **03**

Bit	7	6	5	4	3	2	1	0
Name		**RGS_VBAT_OV_DET**	**RG_VBAT_OV_DEG**	**RG_VBAT_OV_VTH**				**RG_VBAT_OV_EN**
Type		RO	RW	RW				RW
Reset		0	0	0	0	0	1	1

Bit(s)	Name	Description
6	RGS_VBAT_OV_DET	**VBAT_OV voltage detection.** 0 VBAT voltage < VBAT_OV_VTH 1 VBAT voltage > VBAT_OV_VTH
5	RG_VBAT_OV_DEG	**VBAT OV voltage detection deglitch enable.** 0 no debounce 1 debounce one cycle (1us)
4:1	RG_VBAT_OV_VTH	**Battery over-voltag detection threshold** 0000: 3.900V, 0001: 4.200V (default), 0010: 4.300V, 0011: 4.400V 0100: 4.450V, 0101: 4.500V, 0110: 4.600V, 0111: 4.700V 1000: 3.800V
0	RG_VBAT_OV_EN	**Battery over-voltag for driving protection (0: disable, 1: enable)**

8E **CHR_CON7** **Charger Control Register 7** **01**

Bit	7	6	5	4	3	2	1	0
Name						**BATON_TDET_EN**	**RG_BATON_HT_EN_RSV0**	**RG_BATON_EN**
Type						RW	RW	RW
Reset						0	0	1

Bit(s)	Name	Description
2	BATON_TDET_EN	**0: N/A** 1: Enable BATON Temperature detection
1	RG_BATON_HT_EN_RSV0	**Battery-On HW high temperature detection** 0: Disabled 1: Enabled
0	RG_BATON_EN	**BATON battery detection comparator enable (gated by CHR_LDO_DET to default 1 in analog domain)** 0: disable 1: enable (Default)

© 2015 - 2017 MediaTek Inc.

This document contains information that is proprietary to MediaTek Inc. ("MediaTek") and/or its licensor(s).
Any unauthorized use, reproduction or disclosure of this document in whole or in part is strictly prohibited.

8F	CHR_CON7_H	Charger Control Register 7_H	00

Bit	7	6	5	4	3	2	1	0
Name								na
Type								RW
Reset								0

Bit(s)	Name	Description
0	na	

92	CHR_CON9	Charger Control Register 9	00

Bit	7	6	5	4	3	2	1	0
Name								RG_FRC_CSVTH_USBDL
Type								RW
Reset								0

Bit(s)	Name	Description
0	RG_FRC_CSVTH_USBDL	**Force CS DAC detection threshold to maximum in USB download mode** 0: CS_VTH=450mA in USBDL mode 1: CS_VTH=1600mA in USBDL mode

93	CHR_CON10	Charger Control Register 10	20

Bit	7	6	5	4	3	2	1	0
Name		RGS_OTG_BVALID_DET	RG_OTG_BVALID_EN					
Type		RO	RW					
Reset		0	1					

Bit(s)	Name	Description
6	RGS_OTG_BVALID_DET	**Indicates if the session for B-peripheral is valid (0.8V<Vth<4V). Here VBUS is connected to CHRIN.** 0: Vbus < 0.8V 1: Vbus > 4V
5	RG_OTG_BVALID_EN	**OTG BValid detection enable (1: enable, 0: disable)**

© 2015 - 2017 MediaTek Inc.

This document contains information that is proprietary to MediaTek Inc. ("MediaTek") and/or its licensor(s).
Any unauthorized use, reproduction or disclosure of this document in whole or in part is strictly prohibited.

96	CHR_CON13	Charger Control Register 13	10

Bit	7	6	5	4	3	2	1	0
Name				RG_CHRWDT_EN	RG_CHRWDT_TD			
Type				RW	RW			
Reset				1	0	0	0	0

Bit(s)	Name	Description
4	RG_CHRWDT_EN	**Enable setting for charger watch-dog timer** 0 disable 1 enable if (CHR_EN(@CHR_CON0) == 1) Note1: UVLO don't care this bit and will timeout after 3000s Note2: PCHR_TESTMODE can force to control watch-dog enable by using this bit
3:0	RG_CHRWDT_TD	**Time constant setting for charger watch-dog timer** 0: 4 sec 1: 8 sec 2: 16 sec 3: 32 sec 4: 128 sec 5: 256 sec 6: 512 sec 7: 1024 sec 8~15: 3000 sec

97	CHR_CON13_H	Charger Control Register 13_H	00

Bit	7	6	5	4	3	2	1	0
Name								RG_CHRWDT_WR
Type								W1C
Reset								0

Bit(s)	Name	Description
0	RG_CHRWDT_WR	**To reset charger watch-dog timer and update CHRWDT_TD** 0: reset inactive 1: reset active and CHRWDT_TD updated to PCHR_DIG

99	CHR_CON15	Charger Control Register 15	00

Bit	7	6	5	4	3	2	1	0
Name						RGS_CHRWDT_O	RG_CHRWDT_FL	

© 2015 - 2017 MediaTek Inc.

This document contains information that is proprietary to MediaTek Inc. ("MediaTek") and/or its licensor(s).
Any unauthorized use, reproduction or disclosure of this document in whole or in part is strictly prohibited.

99	CHR_CON15	Charger Control Register 15	00

						UT	AG_WR	
Type						RO	W1C	
Reset						0	0	

Bit(s)	Name	Description
2	RGS_CHRWDT_OUT	**Time-out flag for charger watch-dog timer** Read: 0: No time-out status 1: Time-out status asserted
1	RG_CHRWDT_FLAG_WR	**Clear time-out flag for charger watch-dog timer** Read: 0: N/A (while RGS_CHRWDT_OUT=0) 1: Clear time-out flag while RGS_CHRWDT_OUT=1

9A	CHR_CON16	Charger Control Register 16	00

Bit	7	6	5	4	3	2	1	0
Name					RG_USBDL_SET	RG_USBDL_RST		
Type					RW	RW		
Reset					0	0		

Bit(s)	Name	Description
3	RG_USBDL_SET	**USBDL_MODE software set control** 0: No effect 1: Force enter USBDL MODE
2	RG_USBDL_RST	**USBDL_MODE software reset control** 0: No effect 1: Force leave USBDL MODE (priority is less than USBDL_DET)

9B	CHR_CON16_H	Charger Control Register 16_H	00

Bit	7	6	5	4	3	2	1	0
Name				RG_ADCIN_CHR_EN	RG_ADCIN_VSEN_EN	RG_ADCIN_VBAT_EN	RG_ADCIN_VSEN_EXT_BATON_EN	RG_ADCIN_VSEN_MUX_EN
Type				RW	RW	RW	RW	RW
Reset				0	0	0	0	0

Bit(s)	Name	Description

© 2015 - 2017 MediaTek Inc.
This document contains information that is proprietary to MediaTek Inc. ("MediaTek") and/or its licensor(s).
Any unauthorized use, reproduction or disclosure of this document in whole or in part is strictly prohibited.

Bit(s)	Name	Description
4	RG_ADCIN_CHR_EN	**AUXADC input source enable for CHR** 0: Disabled 1: Enabled
3	RG_ADCIN_VSEN_EN	**AUXADC input source enable for VSEN** 0: Disabled 1: Enabled
2	RG_ADCIN_VBAT_EN	**AUXADC input source enable for VBAT** 0: Disabled 1: Enabled
1	RG_ADCIN_VSEN_EXT_BATON_EN	**AUXADC input source enable for external source to be switched to AUXADC's Ch3** 0: Disabled 1: Enabled
0	RG_ADCIN_VSEN_MUX_EN	**AUXADC input source enable for VSEN to be switched to VBAT's divider** 0: Disabled 1: Enabled

9C **CHR_CON17** **Charger Control Register 17** **02**

Bit	7	6	5	4	3	2	1	0
Name				RG_UVLO_VTHL				
Type				RW				
Reset				0	0	0	1	0

Bit(s)	Name	Description
4:0	RG_UVLO_VTHL	**UVLO low threshold selection** 00000: 2.5V, 00001: 2.55V, 00010: 2.6V (default), 00011: 2.65V 00100: 2.7V, 00101: 2.75V, 00110: 2.8V, 00111: 2.85V, 01000: 2.9V

9D **CHR_CON18** **Charger Control Register 18** **03**

Bit	7	6	5	4	3	2	1	0
Name				RG_LBAT_INT_VTH				
Type				RW				
Reset				0	0	0	1	1

Bit(s)	Name	Description
4:0	RG_LBAT_INT_VTH	**LBAT_INT threshold voltage** 00000: 2.5V, 00001: 2.55V, 00010: 2.6V (default), 00011: 2.65V 00100: 2.7V, 00101: 2.75V, 00110: 2.8V, 00111: 2.85V, 01000: 2.9V, 01001: 2.95V, 01010: 3.0V, 01011: 3.05V, 01100: 3.1V, 01101: 3.15V, 01110: 3.2V, 01111: 3.25V, 11000: 3.3V, 11001: 3.35V, 11010: 3.4V

© 2015 - 2017 MediaTek Inc.

This document contains information that is proprietary to MediaTek Inc. ("MediaTek") and/or its licensor(s).
Any unauthorized use, reproduction or disclosure of this document in whole or in part is strictly prohibited.

9E	CHR_CON19	Charger Control Register 19	00

Bit	7	6	5	4	3	2	1	0
Name						RG_BGR_RSEL		
Type						RW		
Reset						0	0	0

Bit(s)	Name	Description
2:0	RG_BGR_RSEL	**BGR resistor (R0 = R1) selection, R2=85K, and VBG=(R0/R2)*dVBE+VBE** 0: c0, 780K (default) 1: c1, 820K 2: c2, 860K 3: c3, 900K 4: cm4, 620K 5: cm3, 660K 6: cm2, 700K 7: cm1, 740K

9F	CHR_CON20	Charger Control Register 20	00

Bit	7	6	5	4	3	2	1	0
Name	RGS_BC11_CMP_OUT				RG_BC11_VSRC_EN		RG_BC11_RST	RG_BC11_BB_CTRL
Type	RO				RW		RW	RW
Reset	0				0	0	0	0

Bit(s)	Name	Description
7	RGS_BC11_CMP_OUT	**Comparison result of BC11 charger detection** 0: DP or DM < BC11_VREF_VTH 1: DP or DM > BC11_VREF_VTH
3:2	RG_BC11_VSRC_EN	**BC11 voltage source. Set VDP_SRC = 0.6V** 0: disable the voltage 1: enable the voltage source to DM 2: enable the voltage source to DP 3: forbidden
1	RG_BC11_RST	**Reset BC11 detection mechanism in PCHR_DIG** 0: No effect 1: BC11 detection mechanism is disabled in PCHR_DIG
0	RG_BC11_BB_CTRL	**Force BC11 charger detection controlled by baseband** 0: BC11 detection by PCHR_DIG (hardware mode) 1: BC11 detection by baseband (software mode)

© 2015 - 2017 MediaTek Inc.

This document contains information that is proprietary to MediaTek Inc. ("MediaTek") and/or its licensor(s).
Any unauthorized use, reproduction or disclosure of this document in whole or in part is strictly prohibited.

A0	CHR_CON21	Charger Control Register 21	00

Bit	7	6	5	4	3	2	1	0
Name	RG_BC11_IPU_EN		RG_BC11_IPD_EN		RG_BC11_CMP_EN		RG_BC11_VREF_VTH	
Type	RW		RW		RW		RW	
Reset	0	0	0	0	0	0	0	0

Bit(s)	Name	Description
7:6	RG_BC11_IPU_EN	**BC11 7~15uA pull up current enable** 0: disable the pull-up current 1: enable the pull-up current to DM 2: enable the pull-up current to DP 3: forbidden
5:4	RG_BC11_IPD_EN	**BC11 50~150uA pull down current** 0: disable the pull-down current 1: enable the pull-down current to DM 2: enable the pull-down current to DP 3: forbidden
3:2	RG_BC11_CMP_EN	**BC11 comparator connection** 0: disable the comparator 1: enable the comparator to DM 2: enable the comparator to DP 3: forbidden
1:0	RG_BC11_VREF_VTH	**VREF threshold voltage for comparator** 0: VREF_VTH=0.325V 1: VREF_VTH=1.2V 2 & 3: VREF_VTH=2.6V (for Apple adaptor)

A1	CHR_CON21_H	Charger Control Register 21_H	00

Bit	7	6	5	4	3	2	1	0
Name								RG_BC11_BIAS_EN
Type								RW
Reset								0

Bit(s)	Name	Description
0	RG_BC11_BIAS_EN	**Enable BC11 detection bias circuit** 0: Disabled 1: Enabled

© 2015 - 2017 MediaTek Inc.

This document contains information that is proprietary to MediaTek Inc. ("MediaTek") and/or its licensor(s).
Any unauthorized use, reproduction or disclosure of this document in whole or in part is strictly prohibited.

A3 **CHR_CON23** **Charger Control Register 23** **04**

Bit	7	6	5	4	3	2	1	0
Name		RG_CSDAC_STP				RG_CSDAC_DLY		
Type		RW				RW		
Reset		0	0	0		1	0	0

Bit(s)	Name	Description
6:4	RG_CSDAC_STP	**Current DAC output step timer.** 1/1/2/3/4/5/6/7 code/ per-step
2:0	RG_CSDAC_DLY	**Current DAC output detection delay control.** 16/32/64/128/256/512/1024/2048us (512us default, reuse in HW CV Mode)

A4 **CHR_CON24** **Charger Control Register 24** **44**

Bit	7	6	5	4	3	2	1	0
Name	RG_CHRIND_DIMMING	RG_CHRIND_ON	RG_LOW_ICH_DB					
Type	RW	RW	RW					
Reset	0	1	0	0	0	1	0	0

Bit(s)	Name	Description
7	RG_CHRIND_DIMMING	**Enable pre-charge indicator dimming** 0: Disabled 1: Enabled
6	RG_CHRIND_ON	**Pre-charge indicator on (gated by CHR_LDO_DET to default 0 in analog domain)** 0: disable indicator 1: enable indicator
5:0	RG_LOW_ICH_DB	**Plug out HW detection debounce time (base=16ms)** Debounce time : Code * 16ms

A5 **CHR_CON25** **Charger Control Register 25** **10**

Bit	7	6	5	4	3	2	1	0
Name	RG_ULC_DET_EN	RG_HWCV_EN		RG_TRACKING_EN		RG_CSDAC_MODE	RG_VCDT_MODE	RG_CV_MODE
Type	RW	RW		RW		RW	RW	RW
Reset	0	0		1		0	0	0

© 2015 - 2017 MediaTek Inc.

This document contains information that is proprietary to MediaTek Inc. ("MediaTek") and/or its licensor(s).
Any unauthorized use, reproduction or disclosure of this document in whole or in part is strictly prohibited.

Bit(s)	Name	Description
7	RG_ULC_DET_EN	**Enable charger plug out auto detection. This fuction has to be applied with RG_HWCV_EN=1.** 0: Disabled 1: Enabled
6	RG_HWCV_EN	**Enable hardware CV current tracking** 0: Disabled 1: Enabled
4	RG_TRACKING_EN	**0 : Current calibration use CS_VTH[n] and CS_VTH[n-1] as high/low threshold.** 1 : Current calibration use CS_VTH[n] and LTH as high/low threshold.
2	RG_CSDAC_MODE	**0: If not entering CC, charging is AUTO mode** 1: If leaving UVLO, charging is controlled by RG_CSDAC_EN (same as CC mode)
1	RG_VCDT_MODE	**Charger detection mode selection** 0: Charger detection can only be active in off state 1: Charger detection is active in both on and off state
0	RG_CV_MODE	**Battery CV detection mode selection.** 0: CV detection can only be active in off state 1: CV detection is active in both on and off state

AA **CHR_CON30** **Charger Control Register 30** **8E**

Bit	7	6	5	4	3	2	1	0
Name	RG_DAC_USBDL_MAX							
Type	RW							
Reset	1	0	0	0	1	1	1	0

Bit(s)	Name	Description
7:0	RG_DAC_USBDL_MAX	**USBDL maximum current setting** Default: 0x28E ==> 1010001110

AB **CHR_CON30_H** **Charger Control Register 30_H** **02**

Bit	7	6	5	4	3	2	1	0
Name							RG_DAC_USBDL_MAX1	
Type							RW	
Reset							1	0

Bit(s)	Name	Description
1:0	RG_DAC_USBDL_MAX1	**USBDL maximum current setting** Default: 0x28E ==> 1010001110

© 2015 - 2017 MediaTek Inc.
This document contains information that is proprietary to MediaTek Inc. ("MediaTek") and/or its licensor(s).
Any unauthorized use, reproduction or disclosure of this document in whole or in part is strictly prohibited.

AD **CHR_CON42** **Charger Control Register 42** **00**

Bit	7	6	5	4	3	2	1	0
Name							RG_ENVTEM_EN	RG_ENVTEM_D
Type							W1C	RW
Reset							0	0

Bit(s)	Name	Description
1	RG_ENVTEM_EN	**To block CHR_DET signal to start_up** 0: N/A 1: write enable
0	RG_ENVTEM_D	**To block CHR_DET signal to start_up** 1:block 0: non-block

AE **BATON_CON0** **BATON Control Register 0** **00**

Bit	7	6	5	4	3	2	1	0
Name								RG_BATON_HT_EN
Type								RW
Reset								0

Bit(s)	Name	Description
0	RG_BATON_HT_EN	**Battery-On HW high temperature detection** 1'b0: disable 1'b1: enable

B0 **CHR_CON44** **Charger Control Register 44** **01**

Bit	7	6	5	4	3	2	1	0
Name							RGS_BATON_UNDET	RG_QI_BATON_LT_EN
Type							RO	RW
Reset							0	1

Bit(s)	Name	Description
1	RGS_BATON_UNDET	**Battery-On undetected (1: not detected, 0: detected)**
0	RG_QI_BATON_LT_EN	

© 2015 - 2017 MediaTek Inc.

This document contains information that is proprietary to MediaTek Inc. ("MediaTek") and/or its licensor(s).
Any unauthorized use, reproduction or disclosure of this document in whole or in part is strictly prohibited.

B1	CHR_CON45	Charger Control Register 45	0F

Bit	7	6	5	4	3	2	1	0
Name					RG_JW_CS_VTH			
Type					RW			
Reset					1	1	1	1

Bit(s)	Name	Description
3:0	RG_JW_CS_VTH	**Current sense voltage detection threshold @ Rcs=65mohm** 1111: 70mA 1110: 200mA 1101: 300mA 1100: 450mA (usbdl) 1011: 550mA 1010: 650mA 1001: 700mA 1000: 800mA 0111: 900mA 0110: 1000mA 0101: 1100mA 0100: 1200mA 0011: 1350mA 0010: 1500mA 0001: 1600mA 0000: 2000mA

B2	CHR_CON45_H	Charger Control Register 45_H	0F

Bit	7	6	5	4	3	2	1	0
Name			RG_JW_CV_VTH					
Type			RW					
Reset			0	0	1	1	1	1

Bit(s)	Name	Description
5:0	RG_JW_CV_VTH	**Battery CV dection threshold trimming option, default 4.2V** this register is used for FT CV threshold trimming and not for customer's fine tuning (pchr_dig should invert MSB bit. otherwise, BC1.1 2.2V threshold would be wrong) 000000~000011:3.5V, 3.6V, 3.7V, 3.8V 000100~000111:3.85V, 3.9V, 4V, 4.05V 001000~001011:4.1V, 4.125V, 4.1375v, 4.15V 001100~001111:4.1625V, 4.175V, 4.1875V, 4.2V (default) 010000~010011:4.2125V, 4.225V, 4.2375V, 4.25V 010100~010111:4.2625V, 4.275V, 4.2875V, 4.3V 011000~011011:4.3125V, 4.325V, 4.3375V, 4.35V 011100~011111:4.3625V, 4.375V, 4.3875V, 4.4V 100000~100011:4.4125V, 4.425V, 4.4375V, 4.45V 100100~100111:4.4625V, 4.475V, 4.4875V, 4.5V 101000:4.6V

© 2015 - 2017 MediaTek Inc.

This document contains information that is proprietary to MediaTek Inc. ("MediaTek") and/or its licensor(s).
Any unauthorized use, reproduction or disclosure of this document in whole or in part is strictly prohibited.

Bit(s)	Name	Description
		111111:2.2V (BC1.1)

B3	CHR_CON46	Charger Control Register 46	0F

Bit	7	6	5	4	3	2	1	0
Name					RG_JC_CS_VTH			
Type					RW			
Reset					1	1	1	1

Bit(s)	Name	Description
3:0	RG_JC_CS_VTH	**Current sense voltage detection threshold @ Rcs=65mohm** 1111: 70mA 1110: 200mA 1101: 300mA 1100: 450mA (usbdl) 1011: 550mA 1010: 650mA 1001: 700mA 1000: 800mA 0111: 900mA 0110: 1000mA 0101: 1100mA 0100: 1200mA 0011: 1350mA 0010: 1500mA 0001: 1600mA 0000: 2000mA

B4	CHR_CON46_H	Charger Control Register 46_H	0F

Bit	7	6	5	4	3	2	1	0
Name			RG_JC_CV_VTH					
Type			RW					
Reset			0	0	1	1	1	1

Bit(s)	Name	Description
5:0	RG_JC_CV_VTH	**Battery CV dection threshold trimming option, default 4.2V** this register is used for FT CV threshold trimming and not for customer's fine tuning (pchr_dig should invert MSB bit. otherwise, BC1.1 2.2V threshold would be wrong) 000000~000011:3.5V, 3.6V, 3.7V, 3.8V 000100~000111:3.85V, 3.9V, 4V, 4.05V 001000~001011:4.1V, 4.125V, 4.1375v, 4.15V 001100~001111:4.1625V, 4.175V, 4.1875V, 4.2V (default) 010000~010011:4.2125V, 4.225V, 4.2375V, 4.25V 010100~010111:4.2625V, 4.275V, 4.2875V, 4.3V 011000~011011:4.3125V, 4.325V, 4.3375V, 4.35V 011100~011111:4.3625V, 4.375V, 4.3875V, 4.4V

© 2015 - 2017 MediaTek Inc.

This document contains information that is proprietary to MediaTek Inc. ("MediaTek") and/or its licensor(s).
Any unauthorized use, reproduction or disclosure of this document in whole or in part is strictly prohibited.

Bit(s)	Name	Description
		100000~100011:4.4125V, 4.425V, 4.4375V, 4.45V 100100~100111:4.4625V, 4.475V, 4.4875V, 4.5V 101000:4.6V 111111:2.2V (BC1.1)

B5 **CHR_CON47** **Charger Control Register 47** **00**

Bit	7	6	5	4	3	2	1	0
Name							RG_JEITA_EN	
Type							RW	
Reset							0	

Bit(s)	Name	Description
1	RG_JEITA_EN	**0:disable JEITA 1: enable JEITA**

DA **VA18CTL0** **VA18 Control register 0** **01**

Bit	7	6	5	4	3	2	1	0
Name						RG_OVR_VA18_PMOD		RG_VA18_EN
Type						RW		RW
Reset						0		1

Bit(s)	Name	Description
2	RG_OVR_VA18_PMOD	0: Normal mode 1: Low power mode
0	RG_VA18_EN	

DB **VA18CTL1** **VA18 Control register 1** **05**

Bit	7	6	5	4	3	2	1	0
Name						RG_OFF_VA18_PMOD		
Type						RW		
Reset						1		

Bit(s)	Name	Description
2	RG_OFF_VA18_PMOD	**VA18 operational mode for system OFF mode** 0: Normal mode 1: Low power mode

© 2015 - 2017 MediaTek Inc.

This document contains information that is proprietary to MediaTek Inc. ("MediaTek") and/or its licensor(s).
Any unauthorized use, reproduction or disclosure of this document in whole or in part is strictly prohibited.

E2 **VA18PSI0** **VA18 LDO PSI register 0** **00**

Bit	7	6	5	4	3	2	1	0
Name			RG_LP_VA18_PMOD				RG_HP_VA18_PMOD	
Type			RW				RW	
Reset			0				0	

Bit(s)	Name	Description
5	RG_LP_VA18_PMOD	
1	RG_HP_VA18_PMOD	

E3 **VA18PSI1** **VA18 LDO PSI register 1** **00**

Bit	7	6	5	4	3	2	1	0
Name			RG_S1_VA18_PMOD	RG_S1_VA18_ON			RG_S0_VA18_PMOD	RG_S0_VA18_ON
Type			RW	RW			RW	RW
Reset			0	0			0	0

Bit(s)	Name	Description
5	RG_S1_VA18_PMOD	
4	RG_S1_VA18_ON	
1	RG_S0_VA18_PMOD	
0	RG_S0_VA18_ON	

E4 **VBTCTL0** **VBT Control register 0** **00**

Bit	7	6	5	4	3	2	1	0
Name					RG_OVR_VBT_PMOD		RG_VBT_OCFB_EN	RG_VBT_EN
Type					RW		RW	RW
Reset					0	0	0	0

Bit(s)	Name	Description

© 2015 - 2017 MediaTek Inc.

This document contains information that is proprietary to MediaTek Inc. ("MediaTek") and/or its licensor(s).
Any unauthorized use, reproduction or disclosure of this document in whole or in part is strictly prohibited.

Bit(s)	Name	Description
3:2	RG_OVR_VBT_PMOD	**VBT LDO operation mode** 00: Normal mode 01: Lite mode 10: LP mode 11: ULP mode
1	RG_VBT_OCFB_EN	
0	RG_VBT_EN	**VBT LDO enable** 0: disable 1: enable

E5 **VACTL0** **VA Control register 0** **00**

Bit	7	6	5	4	3	2	1	0
Name					**RG_OVR_VA_PMOD**		**RG_VA_OCFB_EN**	**RG_VA_EN**
Type					RW		RW	RW
Reset					0	0	0	0

Bit(s)	Name	Description
3:2	RG_OVR_VA_PMOD	
1	RG_VA_OCFB_EN	
0	RG_VA_EN	

E6 **VCLDOCTL0** **VCORE LDO Control register 0** **10**

Bit	7	6	5	4	3	2	1	0
Name					**RG_OVR_VC_LDO_PMOD**		**RG_VC_LDO_OCFB_EN**	**RG_VC_LDO_EN**
Type					RW		RW	RW
Reset					0	0	0	0

Bit(s)	Name	Description
3:2	RG_OVR_VC_LDO_PMOD	00: Normal mode 01: Lite mode 10: LP mode 11: ULP mode
1	RG_VC_LDO_OCFB_EN	
0	RG_VC_LDO_EN	

© 2015 - 2017 MediaTek Inc.

This document contains information that is proprietary to MediaTek Inc. ("MediaTek") and/or its licensor(s).
Any unauthorized use, reproduction or disclosure of this document in whole or in part is strictly prohibited.

E8 **PSWCTL1** **PSW Control register 1** **00**

Bit	7	6	5	4	3	2	1	0
Name							RG_SWDP_ENA	RG_SWXM_ENA
Type							RW	RW
Reset							0	0

Bit(s)	Name	Description
1	RG_SWDP_ENA	ECO: optional SWDP enable, enabled by RG_PSEQ_RSV1_LSB[0]
0	RG_SWXM_ENA	ECO: optional SWXM enable, enabled by RG_PSEQ_RSV1_LSB[0]

E9 **VIO18CTL0** **VIO18 Control register 0** **10**

Bit	7	6	5	4	3	2	1	0
Name					RG_OVR_VIO18_PMOD		RG_VIO18_OCFB_EN	RG_VIO18_EN
Type					RW		RW	RW
Reset					0	0	0	0

Bit(s)	Name	Description
3:2	RG_OVR_VIO18_PMOD	
1	RG_VIO18_OCFB_EN	
0	RG_VIO18_EN	

EA **VSFCTL0** **VSF Control register 0** **10**

Bit	7	6	5	4	3	2	1	0
Name					RG_OVR_VSF_PMOD		RG_VSF_OCFB_EN	RG_VSF_EN
Type					RW		RW	RW
Reset					0	0	0	0

Bit(s)	Name	Description
3:2	RG_OVR_VSF_PMOD	
1	RG_VSF_OCFB_EN	
0	RG_VSF_EN	

© 2015 - 2017 MediaTek Inc.

This document contains information that is proprietary to MediaTek Inc. (“MediaTek”) and/or its licensor(s).
Any unauthorized use, reproduction or disclosure of this document in whole or in part is strictly prohibited.

EB **VIO28CTL0** **VIO28 Control register 0** **30**

Bit	7	6	5	4	3	2	1	0
Name					RG_OVR_VIO28_PMOD		RG_VIO28_OCFB_EN	RG_VIO28_EN
Type					RW		RW	RW
Reset					0	0	0	0

Bit(s)	Name	Description
3:2	RG_OVR_VIO28_PMOD	
1	RG_VIO28_OCFB_EN	
0	RG_VIO28_EN	

EC **VMCCTL0** **VMC Control register 0** **00**

Bit	7	6	5	4	3	2	1	0
Name					RG_OVR_VMC_PMOD		RG_VMC_OCFB_EN	RG_VMC_EN
Type					RW		RW	RW
Reset					0	0	0	0

Bit(s)	Name	Description
3:2	RG_OVR_VMC_PMOD	
1	RG_VMC_OCFB_EN	
0	RG_VMC_EN	

ED **VUSBCTL0** **VUSB Control register 0** **00**

Bit	7	6	5	4	3	2	1	0
Name					RG_OVR_VUSB_PMOD		RG_VUSB_OCFB_EN	RG_VUSB_EN
Type					RW		RW	RW
Reset					0	0	0	0

Bit(s)	Name	Description
3:2	RG_OVR_VUSB_PMOD	
1	RG_VUSB_OCFB_EN	
0	RG_VUSB_EN	

© 2015 - 2017 MediaTek Inc.

This document contains information that is proprietary to MediaTek Inc. (“MediaTek”) and/or its licensor(s).
Any unauthorized use, reproduction or disclosure of this document in whole or in part is strictly prohibited.

EF **VUSBLDO0** **VUSBLDO0** **00**

Bit	7	6	5	4	3	2	1	0
Name					RG_VUSB_CAL			
Type					RW			
Reset					0	0	0	0

Bit(s)	Name	Description
3:0	RG_VUSB_CAL	4'b0000: 0 mV 4'b0001: -20 mV 4'b0010: -40 mV 4'b0011: -60 mV 4'b0100: -80 mV 4'b0101: -100 mV 4'b0110: -120 mV 4'b0111: -140 mV 4'b1000: +160 mV 4'b1001: +140 mV 4'b1010: +120 mV 4'b1011: +100 mV 4'b1100: +80 mV 4'b1101: +60 mV 4'b1110: +40 mV 4'b1111: +20 mV

F3 **VUSBLDOBF0** **VUSBLDOBF0** **00**

Bit	7	6	5	4	3	2	1	0
Name					RG_VUSB_BUF_CAL			
Type					RW			
Reset					0	0	0	0

Bit(s)	Name	Description
3:0	RG_VUSB_BUF_CAL	4'b0000: 0 mV 4'b0001: -20 mV 4'b0010: -40 mV 4'b0011: -60 mV 4'b0100: -80 mV 4'b0101: -100 mV 4'b0110: -120 mV 4'b0111: -140 mV 4'b1000: +160 mV 4'b1001: +140 mV 4'b1010: +120 mV 4'b1011: +100 mV 4'b1100: +80 mV 4'b1101: +60 mV 4'b1110: +40 mV 4'b1111: +20 mV

© 2015 - 2017 MediaTek Inc.

This document contains information that is proprietary to MediaTek Inc. (“MediaTek”) and/or its licensor(s).
Any unauthorized use, reproduction or disclosure of this document in whole or in part is strictly prohibited.

F5 **VUSBPSI0** **VUSB LDO PSI register 0** **00**

Bit	7	6	5	4	3	2	1	0
Name		RG_LP_VUSB_PMOD				RG_HP_VUSB_PMOD		
Type		RW				RW		
Reset		0	0			0	0	

Bit(s)	Name	Description
6:5	RG_LP_VUSB_PMOD	
2:1	RG_HP_VUSB_PMOD	

F6 **VUSBPSI1** **VUSB LDO PSI register 1** **00**

Bit	7	6	5	4	3	2	1	0
Name		RG_S1_VUSB_PMOD		RGS_S1_VUSB_ON		RG_S0_VUSB_PMOD		RGS_S0_VUSB_ON
Type		RW		RO		RW		RO
Reset		0	0	0		0	0	0

Bit(s)	Name	Description
6:5	RG_S1_VUSB_PMOD	
4	RGS_S1_VUSB_ON	
2:1	RG_S0_VUSB_PMOD	
0	RGS_S0_VUSB_ON	

F7 **VDIG18LDO0** **VDIG18LDO0** **00**

Bit	7	6	5	4	3	2	1	0
Name					RG_OVR_VDIG18_CAL			
Type					RW			
Reset					0	0	0	0

Bit(s)	Name	Description
3:0	RG_OVR_VDIG18_CAL	**VDIG18 calibration** 4'b0000: 0 mV 4'b0001: -20 mV 4'b0010: -40 mV 4'b0011: -60 mV 4'b0100: -80 mV 4'b0101: -100 mV

© 2015 - 2017 MediaTek Inc.

This document contains information that is proprietary to MediaTek Inc. ("MediaTek") and/or its licensor(s).
Any unauthorized use, reproduction or disclosure of this document in whole or in part is strictly prohibited.

Bit(s)	Name	Description
		4'b0110: -120 mV 4'b0111: -140 mV 4'b1000: +160 mV 4'b1001: +140 mV 4'b1010: +120 mV 4'b1011: +100 mV 4'b1100: +80 mV 4'b1101: +60 mV 4'b1110: +40 mV 4'b1111: +20 mV

FB **VDIG18LDOBF0** **VDIG18LDOBF0** **00**

Bit	7	6	5	4	3	2	1	0
Name					RG_OVR_VDIG18_BUF_CAL			
Type					RW			
Reset					0	0	0	0

Bit(s)	Name	Description
		VDIG18 buffer calibration
3:0	RG_OVR_VDIG18_BUF_CAL	4'b0000: 0 mV 4'b0001: -20 mV 4'b0010: -40 mV 4'b0011: -60 mV 4'b0100: -80 mV 4'b0101: -100 mV 4'b0110: -120 mV 4'b0111: -140 mV 4'b1000: +160 mV 4'b1001: +140 mV 4'b1010: +120 mV 4'b1011: +100 mV 4'b1100: +80 mV 4'b1101: +60 mV 4'b1110: +40 mV 4'b1111: +20 mV

FD **VCLDO0** **VCORE LDO register 0** **00**

Bit	7	6	5	4	3	2	1	0
Name				RG_OVR_VC_LDO_CAL				
Type				RW				
Reset				0	0	0	0	0

Bit(s)	Name	Description
		VC LDO calibration
4:0	RG_OVR_VC_LDO_CAL	5'b00000: 0 mV 5'b00001: -5 mV 5'b00010: -10 mV 5'b00011: -15 mV 5'b00100: -20 mV 5'b00101: -25 mV

© 2015 - 2017 MediaTek Inc.

This document contains information that is proprietary to MediaTek Inc. (“MediaTek”) and/or its licensor(s).
Any unauthorized use, reproduction or disclosure of this document in whole or in part is strictly prohibited.

Bit(s)	Name	Description
		5'b00110: -30 mV 5'b00111: -35 mV 5'b01000: -40 mV 5'b01001: -45 mV 5'b01010: -50 mV 5'b01011: -55 mV 5'b01100: -60 mV 5'b01101: -65 mV 5'b01110: -70 mV 5'b01111: -75 mV 5'b10000: +80 mV 5'b10000: +75 mV 5'b10001: +70 mV 5'b10010: +65 mV 5'b10011: +60 mV 5'b10100: +55 mV 5'b10101: +50 mV 5'b10110: +45 mV 5'b10111: +40 mV 5'b11000: +35 mV 5'b11001: +30 mV 5'b11010: +25 mV 5'b11011: +20 mV 5'b11100: +15 mV 5'b11101: +10 mV 5'b11110: +5 mV

FE **VCLDO1** **VCORE LDO register 1** **0A**

Bit	7	6	5	4	3	2	1	0
Name					RG_OVR_VC_LDO_VOSEL			
Type					RW			
Reset					1	0	1	0

Bit(s)	Name	Description
3:0	RG_OVR_VC_LDO_VOSEL	**VC LDO output voltage** 4'b0000: 0.7V 4'b0001: 0.75 V 4'b0010: 0.8 V 4'b0011: 0.85 V 4'b0100: 0.9 V 4'b0101: 0.95 V 4'b0110: 1 V 4'b0111: 1.05 V 4'b1000: 1.1V 4'b1001: 1.15 V 4'b1010: 1.2 V 4'b1011: 1.25 V 4'b1100: 1.3 V 4'b1101: 1.3 V 4'b1110: 1.3 V 4'b1111: 1.3 V

© 2015 - 2017 MediaTek Inc.

This document contains information that is proprietary to MediaTek Inc. (“MediaTek”) and/or its licensor(s).
Any unauthorized use, reproduction or disclosure of this document in whole or in part is strictly prohibited.

101 **VCLDOBF0** **VCORE LDO buffer register 0** **00**

Bit	7	6	5	4	3	2	1	0
Name				RG_OVR_VC_LDO_BUF_CAL				
Type				RW				
Reset				0	0	0	0	0

Bit(s)	Name	Description
4:0	RG_OVR_VC_LDO_BUF_CAL	**VC LDO buffer calibration** 5'b00000: 0 mV 5'b00001: -5 mV 5'b00010: -10 mV 5'b00011: -15 mV 5'b00100: -20 mV 5'b00101: -25 mV 5'b00110: -30 mV 5'b00111: -35 mV 5'b01000: -40 mV 5'b01001: -45 mV 5'b01010: -50 mV 5'b01011: -55 mV 5'b01100: -60 mV 5'b01101: -65 mV 5'b01110: -70 mV 5'b01111: -75 mV 5'b10000: +80 mV 5'b10000: +75 mV 5'b10001: +70 mV 5'b10010: +65 mV 5'b10011: +60 mV 5'b10100: +55 mV 5'b10101: +50 mV 5'b10110: +45 mV 5'b10111: +40 mV 5'b11000: +35 mV 5'b11001: +30 mV 5'b11010: +25 mV 5'b11011: +20 mV 5'b11100: +15 mV 5'b11101: +10 mV 5'b11110: +5 mV

103 **VCLDOPSI0** **VCORE LDO PSI register 0** **C0**

Bit	7	6	5	4	3	2	1	0
Name	RG_HP_VC_LDO_VOSEL					RG_HP_VC_LDO_PMOD		RG_HP_VC_LDO_ON
Type	RW					RW		RW
Reset	1	1	0	0		0	0	0

Bit(s)	Name	Description

© 2015 - 2017 MediaTek Inc.

This document contains information that is proprietary to MediaTek Inc. ("MediaTek") and/or its licensor(s).
Any unauthorized use, reproduction or disclosure of this document in whole or in part is strictly prohibited.

Bit(s)	Name	Description
7:4	RG_HP_VC_LDO_VOSEL	4'b0000: 0.7V 4'b0001: 0.75 V 4'b0010: 0.8 V 4'b0011: 0.85 V 4'b0100: 0.9 V 4'b0101: 0.95 V 4'b0110: 1 V 4'b0111: 1.05 V 4'b1000: 1.1V 4'b1001: 1.15 V 4'b1010: 1.2 V 4'b1011: 1.25 V 4'b1100: 1.3 V 4'b1101: 1.3 V 4'b1110: 1.3 V 4'b1111: 1.3 V
2:1	RG_HP_VC_LDO_PMOD	00: Normal mode 01: Lite mode 10: LP mode 11: ULP mode
0	RG_HP_VC_LDO_ON	

104 **VCLDOPSI1** **VCORE LDO PSI register 1** **00**

Bit	7	6	5	4	3	2	1	0
Name				RG_HP_VC_LDO_CAL				
Type				RW				
Reset				0	0	0	0	0

Bit(s)	Name	Description
4:0	RG_HP_VC_LDO_CAL	

105 **VCLDOPSI2** **VCORE LDO PSI register 2** **80**

Bit	7	6	5	4	3	2	1	0
Name	RG_LP_VC_LDO_VOSEL					RG_LP_VC_LDO_PMOD		RG_LP_VC_LDO_ON
Type	RW					RW		RW
Reset	1	0	0	0		0	0	0

Bit(s)	Name	Description
7:4	RG_LP_VC_LDO_VOSEL	4'b0000: 0.7V 4'b0001: 0.75 V 4'b0010: 0.8 V 4'b0011: 0.85 V

© 2015 - 2017 MediaTek Inc.

This document contains information that is proprietary to MediaTek Inc. ("MediaTek") and/or its licensor(s).
Any unauthorized use, reproduction or disclosure of this document in whole or in part is strictly prohibited.

Bit(s)	Name	Description
		4'b0100: 0.9 V 4'b0101: 0.95 V 4'b0110: 1 V 4'b0111: 1.05 V 4'b1000: 1.1V 4'b1001: 1.15 V 4'b1010: 1.2 V 4'b1011: 1.25 V 4'b1100: 1.3 V 4'b1101: 1.3 V 4'b1110: 1.3 V 4'b1111: 1.3 V
2:1	RG_LP_VC_LDO_PMOD	
0	RG_LP_VC_LDO_ON	

106 **VCLDOPSI3** **VCORE LDO PSI register 3** **00**

Bit	7	6	5	4	3	2	1	0
Name				**RG_LP_VC_LDO_CAL**				
Type				RW				
Reset				0	0	0	0	0

Bit(s)	Name	Description
4:0	RG_LP_VC_LDO_CAL	

107 **VCLDOPSI4** **VCORE LDO PSI register 4** **00**

Bit	7	6	5	4	3	2	1	0
Name						**RG_So_VC_LDO_PMOD**		
Type						RW		
Reset						0	0	

Bit(s)	Name	Description
2:1	RG_So_VC_LDO_PMOD	

© 2015 - 2017 MediaTek Inc.

This document contains information that is proprietary to MediaTek Inc. ("MediaTek") and/or its licensor(s).
Any unauthorized use, reproduction or disclosure of this document in whole or in part is strictly prohibited.

108	VCLDOPSI5	VCORE LDO PSI register 5	00

Bit	7	6	5	4	3	2	1	0
Name	RG_S1_VC_LDO_VOSEL					RG_S1_VC_LDO_PMOD		
Type	RW					RW		
Reset	0	0	0	0		0	0	

Bit(s)	Name	Description
7:4	RG_S1_VC_LDO_VOSEL	4'b0000: 0.7V 4'b0001: 0.75 V 4'b0010: 0.8 V 4'b0011: 0.85 V 4'b0100: 0.9 V 4'b0101: 0.95 V 4'b0110: 1 V 4'b0111: 1.05 V 4'b1000: 1.1V 4'b1001: 1.15 V 4'b1010: 1.2 V 4'b1011: 1.25 V 4'b1100: 1.3 V 4'b1101: 1.3 V 4'b1110: 1.3 V 4'b1111: 1.3 V
2:1	RG_S1_VC_LDO_PMOD	

10A	VIO18LDO0	VIO18LDO0	00

Bit	7	6	5	4	3	2	1	0
Name					RG_VIO18_CAL			
Type					RW			
Reset					0	0	0	0

Bit(s)	Name	Description
3:0	RG_VIO18_CAL	4'b0000: 0 mV 4'b0001: -20 mV 4'b0010: -40 mV 4'b0011: -60 mV 4'b0100: -80 mV 4'b0101: -100 mV 4'b0110: -120 mV 4'b0111: -140 mV 4'b1000: +160 mV 4'b1001: +140 mV 4'b1010: +120 mV 4'b1011: +100 mV 4'b1100: +80 mV 4'b1101: +60 mV 4'b1110: +40 mV 4'b1111: +20 mV

© 2015 - 2017 MediaTek Inc.

This document contains information that is proprietary to MediaTek Inc. (“MediaTek”) and/or its licensor(s).
Any unauthorized use, reproduction or disclosure of this document in whole or in part is strictly prohibited.

10E **VIO18LDOBF0** **VIO18LDOBF0** **00**

Bit	7	6	5	4	3	2	1	0
Name					RG_VIO18_BUF_CAL			
Type					RW			
Reset					0	0	0	0

Bit(s)	Name	Description
3:0	RG_VIO18_BUF_CAL	4'b0000: 0 mV 4'b0001: -20 mV 4'b0010: -40 mV 4'b0011: -60 mV 4'b0100: -80 mV 4'b0101: -100 mV 4'b0110: -120 mV 4'b0111: -140 mV 4'b1000: +160 mV 4'b1001: +140 mV 4'b1010: +120 mV 4'b1011: +100 mV 4'b1100: +80 mV 4'b1101: +60 mV 4'b1110: +40 mV 4'b1111: +20 mV

110 **VIO18PSI0** **VIO18 LDO PSI register0** **00**

Bit	7	6	5	4	3	2	1	0
Name		RG_LP_VIO18_PMOD				RG_HP_VIO18_PMOD		
Type		RW				RW		
Reset		0	0			0	0	

Bit(s)	Name	Description
6:5	RG_LP_VIO18_PMOD	
2:1	RG_HP_VIO18_PMOD	

111 **VIO18PSI1** **VIO18 LDO PSI register1** **00**

Bit	7	6	5	4	3	2	1	0
Name		RG_S1_VIO18_PMOD				RG_S0_VIO18_PMOD		
Type		RW				RW		
Reset		0	0			0	0	

Bit(s)	Name	Description

© 2015 - 2017 MediaTek Inc.

This document contains information that is proprietary to MediaTek Inc. ("MediaTek") and/or its licensor(s).
Any unauthorized use, reproduction or disclosure of this document in whole or in part is strictly prohibited.

Bit(s)	Name	Description
6:5	RG_S1_VIO18_PMOD	
2:1	RG_S0_VIO18_PMOD	

113 **VSFLDO0** **VSFLDO0** **00**

Bit	7	6	5	4	3	2	1	0
Name					RG_VSF_CAL			
Type					RW			
Reset					0	0	0	0

Bit(s)	Name	Description
3:0	RG_VSF_CAL	4'b0000: 0 mV 4'b0001: -20 mV 4'b0010: -40 mV 4'b0011: -60 mV 4'b0100: -80 mV 4'b0101: -100 mV 4'b0110: -120 mV 4'b0111: -140 mV 4'b1000: +160 mV 4'b1001: +140 mV 4'b1010: +120 mV 4'b1011: +100 mV 4'b1100: +80 mV 4'b1101: +60 mV 4'b1110: +40 mV 4'b1111: +20 mV

114 **VSFLDO1** **VSFLDO1** **00**

Bit	7	6	5	4	3	2	1	0
Name							RG_VSF_VOSEL_1	RG_VSF_VOSEL_0
Type							RW	RW
Reset							0	0

Bit(s)	Name	Description
1	RG_VSF_VOSEL_1	**VSF output voltage select bit_1** 2'b00: 1.86V 2'b01: 3 V 2'b10: 3.3 V 2b'11: null
0	RG_VSF_VOSEL_0	**VSF output voltage select bit_0** 2'b00: 1.86V 2'b01: 3 V 2'b10: 3.3 V 2b'11: null

© 2015 - 2017 MediaTek Inc.

This document contains information that is proprietary to MediaTek Inc. (“MediaTek”) and/or its licensor(s).
Any unauthorized use, reproduction or disclosure of this document in whole or in part is strictly prohibited.

117	VSFLDOBF0	VSFLD OBF0	00

Bit	7	6	5	4	3	2	1	0
Name					RG_VSF_BUF_CAL			
Type					RW			
Reset					0	0	0	0

Bit(s)	Name	Description
3:0	RG_VSF_BUF_CAL	4'b0000: 0 mV 4'b0001: -20 mV 4'b0010: -40 mV 4'b0011: -60 mV 4'b0100: -80 mV 4'b0101: -100 mV 4'b0110: -120 mV 4'b0111: -140 mV 4'b1000: +160 mV 4'b1001: +140 mV 4'b1010: +120 mV 4'b1011: +100 mV 4'b1100: +80 mV 4'b1101: +60 mV 4'b1110: +40 mV 4'b1111: +20 mV

119	VSFPSI0	VSF LDO PSI registe r0	00

Bit	7	6	5	4	3	2	1	0
Name		RG_LP_VSF_PMOD				RG_HP_VSF_PMOD		
Type		RW				RW		
Reset		0	0			0	0	

Bit(s)	Name	Description
6:5	RG_LP_VSF_PMOD	
2:1	RG_HP_VSF_PMOD	

11A	VSFPSI1	VSF LDO PSI registe r1	00

Bit	7	6	5	4	3	2	1	0
Name		RG_S1_VSF_PMOD		RGS_S1_ VSF_ON		RG_S0_VSF_PMOD		RGS_S0_ VSF_ON
Type		RW		RO		RW		RO
Reset		0	0	0		0	0	0

Bit(s)	Name	Description
6:5	RG_S1_VSF_PMOD	
4	RGS_S1_VSF_ON	

© 2015 - 2017 MediaTek Inc.

This document contains information that is proprietary to MediaTek Inc. ("MediaTek") and/or its licensor(s).
Any unauthorized use, reproduction or disclosure of this document in whole or in part is strictly prohibited.

Bit(s)	Name	Description
2:1	RG_So_VSF_PMOD	
0	RGS_So_VSF_ON	

11C **SMPSCTL0** **SMPS Control Register 0** **16**

Bit	7	6	5	4	3	2	1	0
Name	RG_VCORE_BUCK_SCHG_TSTEP			RG_VCORE_BUCK_SCHG_EN				
Type	RW			RW				
Reset	0	0		1				

Bit(s)	Name	Description
7:6	RG_VCORE_BUCK_SCHG_TSTEP	**VCORE DVS soft change time step** 2'b00: 0.6us (default) 2'b01: 1.3us 2'b10: 2.6us 2'b11: 4.6us
4	RG_VCORE_BUCK_SCHG_EN	**VCORE DVS soft change enable**

121 **SMPSANA3** **SMPS Analog Control Register 3** **00**

Bit	7	6	5	4	3	2	1	0
Name					RG_VOUTDET_EN	RG_VCORE_VSLEEP_SEL		
Type					RW	RW		
Reset					0	0	0	

Bit(s)	Name	Description
3	RG_VOUTDET_EN	**VOUT tied to VBAT detection enable** 0: disable 1: enable
2:1	RG_VCORE_VSLEEP_SEL	**sleep mode voltage selection** 00: 0.7V 01: 0.75V 10: 0.6V 11: 0.65V

135 **VCBUCK19** **VCORE BUCK register 19** **00**

© 2015 - 2017 MediaTek Inc.

This document contains information that is proprietary to MediaTek Inc. ("MediaTek") and/or its licensor(s).
Any unauthorized use, reproduction or disclosure of this document in whole or in part is strictly prohibited.

135	VCBUCK19	VCORE BUCK register 19	00

Bit	7	6	5	4	3	2	1	0
Name							RGS_QI_VCORE_OC_STATUS	
Type							RO	
Reset							0	

Bit(s)	Name	Description
1	RGS_QI_VCORE_OC_STATUS	**OC status**

13E	VCBUCKPSI0	VCORE BUCK PSI register 0	E1

Bit	7	6	5	4	3	2	1	0
Name	RG_HP_VC_BUCK_VOVAL				RG_HP_VC_BUCK_VOADJ			RG_HP_VC_BUCK_ON
Type	RW				RW			RW
Reset	1	1	1	0	0	0	0	1

Bit(s)	Name	Description
7:4	RG_HP_VC_BUCK_VOVAL	**VCORE BUCK output voltage value for HP state** 0000: 0.6v 0001: 0.6v + 50mV 0010: 0.6v + 50mV*2 0100: 0.6v + 50mv*4 0110: 0.6v + 50mv*6 1000: 0.6v + 50mv*8 1010: 0.6v + 50mv*10 1100: 0.6v + 50mv*12 = 1.2v 1110: 0.6v + 50mv*14 1111: 0.6v + 50mV*15 = 1.35v
3:1	RG_HP_VC_BUCK_VOADJ	**VCORE BUCK voltage adjust value for HP state (6.25mV/bit)**
0	RG_HP_VC_BUCK_ON	**VCORE BUCK on/off control for HP state** 0: off 1: on

13F	VCBUCKPSI1	VCORE BUCK PSI register 1	A1

Bit	7	6	5	4	3	2	1	0
Name	RG_LP_VC_BUCK_VOVAL				RG_LP_VC_BUCK_VOADJ			RG_LP_VC_BUC

This document contains information that is proprietary to MediaTek Inc. ("MediaTek") and/or its licensor(s).
Any unauthorized use, reproduction or disclosure of this document in whole or in part is strictly prohibited.

13F **VCBUCKPSI1** **VCORE BUCK PSI register 1** **A1**

								K_ON
Type	RW				RW			RW
Reset	1	0	1	0	0	0	0	1

Bit(s)	Name	Description
7:4	RG_LP_VC_BUCK_VOVAL	**VCORE BUCK output voltage value for LP state** 0000: 0.6v 0001: 0.6v + 50mV 0010: 0.6v + 50mV*2 0100: 0.6v + 50mv*4 0110: 0.6v + 50mv*6 1000: 0.6v + 50mv*8 1010: 0.6v + 50mv*10 1100: 0.6v + 50mv*12 = 1.2v 1110: 0.6v + 50mv*14 1111: 0.6v + 50mV*15 = 1.35v
3:1	RG_LP_VC_BUCK_VOADJ	**VCORE BUCK voltage adjust value for LP state (6.25mV/bit)**
0	RG_LP_VC_BUCK_ON	**VCORE BUCK on/off control for LP state** 0: off 1: on

140 **VCBUCKPSI2** **VCORE BUCK PSI register 2** **20**

Bit	7	6	5	4	3	2	1	0
Name	**RG_S1_VC_BUCK_VOVAL**				**RG_S1_VC_BUCK_VOADJ**			
Type	RW				RW			
Reset	0	0	1	0	0	0	0	

Bit(s)	Name	Description
7:4	RG_S1_VC_BUCK_VOVAL	**VCORE BUCK output voltage value for LP state** 0000: 0.6v 0001: 0.6v + 50mV 0010: 0.6v + 50mV*2 0100: 0.6v + 50mv*4 0110: 0.6v + 50mv*6 1000: 0.6v + 50mv*8 1010: 0.6v + 50mv*10 1100: 0.6v + 50mv*12 = 1.2v 1110: 0.6v + 50mv*14 1111: 0.6v + 50mV*15 = 1.35v
3:1	RG_S1_VC_BUCK_VOADJ	**VCORE BUCK voltage adjust value for LP state (6.25mV/bit)**

© 2015 - 2017 MediaTek Inc.

This document contains information that is proprietary to MediaTek Inc. ("MediaTek") and/or its licensor(s).
Any unauthorized use, reproduction or disclosure of this document in whole or in part is strictly prohibited.

200 **AUXADC_ADC0** **AUXADC ADC register 0** **00**

Bit	7	6	5	4	3	2	1	0
Name	AUXADC_ADC_OUT_CH0_L							
Type	RO							
Reset	0	0	0	0	0	0	0	0

Bit(s)	Name	Description
7:0	AUXADC_ADC_OUT_CH0_L	**AUXADC channel 0 output data bit [7:0]**

201 **AUXADC_ADC0_H** **AUXADC ADC register 0_H** **00**

Bit	7	6	5	4	3	2	1	0
Name	AUXADC_ADC_RDY_CH0	AUXADC_ADC_OUT_CH0_H						
Type	RO	RO						
Reset	0	0	0	0	0	0	0	0

Bit(s)	Name	Description
7	AUXADC_ADC_RDY_CH0	**AUXADC channel 0 output data ready** 0: AUXADC data proceeding 1: AUXADC data ready
6:0	AUXADC_ADC_OUT_CH0_H	**AUXADC channel 0 output data bit [14:8]**

202 **AUXADC_ADC1** **AUXADC ADC register 1** **00**

Bit	7	6	5	4	3	2	1	0
Name	AUXADC_ADC_OUT_CH1_L							
Type	RO							
Reset	0	0	0	0	0	0	0	0

Bit(s)	Name	Description
7:0	AUXADC_ADC_OUT_CH1_L	**AUXADC channel 1 output data bit [7:0]**

203 **AUXADC_ADC1_H** **AUXADC ADC register 1_H** **00**

Bit	7	6	5	4	3	2	1	0
Name	AUXADC	AUXADC_ADC_OUT_CH1_H						

This document contains information that is proprietary to MediaTek Inc. ("MediaTek") and/or its licensor(s).
Any unauthorized use, reproduction or disclosure of this document in whole or in part is strictly prohibited.

203 **AUXADC_ADC1_H** **AUXADC ADC register 1_H** **00**

	_ADC_RDY_CH1						
Type	RO	RO					
Reset	0	0	0	0	0	0	0	0

Bit(s)	Name	Description
7	AUXADC_ADC_RDY_CH1	**AUXADC channel 1 output data ready** 0: AUXADC data proceeding 1: AUXADC data ready
6:0	AUXADC_ADC_OUT_CH1_H	**AUXADC channel 1 output data bit [14:8]**

204 **AUXADC_ADC2** **AUXADC ADC register 2** **00**

Bit	7	6	5	4	3	2	1	0
Name	AUXADC_ADC_OUT_CH2_L							
Type	RO							
Reset	0	0	0	0	0	0	0	0

Bit(s)	Name	Description
7:0	AUXADC_ADC_OUT_CH2_L	**AUXADC channel 2 output data bit [7:0]**

205 **AUXADC_ADC2_H** **AUXADC ADC register 2_H** **00**

Bit	7	6	5	4	3	2	1	0
Name	AUXADC_ADC_RDY_CH2				AUXADC_ADC_OUT_CH2_H			
Type	RO				RO			
Reset	0				0	0	0	0

Bit(s)	Name	Description
7	AUXADC_ADC_RDY_CH2	**AUXADC channel 2 output data ready** 0: AUXADC data proceeding 1: AUXADC data ready
3:0	AUXADC_ADC_OUT_CH2_H	**AUXADC channel 2 output data bit [11:8]**

© 2015 - 2017 MediaTek Inc.

This document contains information that is proprietary to MediaTek Inc. ("MediaTek") and/or its licensor(s).
Any unauthorized use, reproduction or disclosure of this document in whole or in part is strictly prohibited.

206 **AUXADC_ADC3** **AUXADC ADC register 3** **00**

Bit	7	6	5	4	3	2	1	0
Name	AUXADC_ADC_OUT_CH3_L							
Type	RO							
Reset	0	0	0	0	0	0	0	0

Bit(s)	Name	Description
7:0	AUXADC_ADC_OUT_CH3_L	**AUXADC channel 3 output data bit [7:0]**

207 **AUXADC_ADC3_H** **AUXADC ADC register 3_H** **00**

Bit	7	6	5	4	3	2	1	0
Name	AUXADC_ADC_RDY_CH3				AUXADC_ADC_OUT_CH3_H			
Type	RO				RO			
Reset	0				0	0	0	0

Bit(s)	Name	Description
7	AUXADC_ADC_RDY_CH3	**AUXADC channel 3 output data ready** 0: AUXADC data proceeding 1: AUXADC data ready
3:0	AUXADC_ADC_OUT_CH3_H	**AUXADC channel 3 output data bit [11:8]**

208 **AUXADC_ADC4** **AUXADC ADC register 4** **00**

Bit	7	6	5	4	3	2	1	0
Name	AUXADC_ADC_OUT_CH4_L							
Type	RO							
Reset	0	0	0	0	0	0	0	0

Bit(s)	Name	Description
7:0	AUXADC_ADC_OUT_CH4_L	**AUXADC channel 4 output data bit [7:0]**

209 **AUXADC_ADC4_H** **AUXADC ADC register 4_H** **00**

Bit	7	6	5	4	3	2	1	0
Name	AUXADC				AUXADC_ADC_OUT_CH4_H			

© 2015 - 2017 MediaTek Inc.

This document contains information that is proprietary to MediaTek Inc. ("MediaTek") and/or its licensor(s).
Any unauthorized use, reproduction or disclosure of this document in whole or in part is strictly prohibited.

209 **AUXADC_ADC4_H** **AUXADC ADC register 4_H** **00**

	_ADC_RDY_CH4							
Type	RO				RO			
Reset	0				0	0	0	0

Bit(s)	Name	Description
7	AUXADC_ADC_RDY_CH4	**AUXADC channel 4 output data ready** 0: AUXADC data proceeding 1: AUXADC data ready
3:0	AUXADC_ADC_OUT_CH4_H	**AUXADC channel 4 output data bit [11:8]**

21A **AUXADC_ADC13** **AUXADC ADC register 13** **00**

Bit	7	6	5	4	3	2	1	0
Name	AUXADC_ADC_OUT_THR_HW_L							
Type	RO							
Reset	0	0	0	0	0	0	0	0

Bit(s)	Name	Description
7:0	AUXADC_ADC_OUT_THR_HW_L	**AUXADC channel 13 output data bit [7:0]**

21B **AUXADC_ADC13_H** **AUXADC ADC register 13_H** **00**

Bit	7	6	5	4	3	2	1	0
Name	AUXADC_ADC_RDY_THR_HW				AUXADC_ADC_OUT_THR_HW_H			
Type	RO				RO			
Reset	0				0	0	0	0

Bit(s)	Name	Description
7	AUXADC_ADC_RDY_THR_HW	**AUXADC channel 13 output data ready** 0: AUXADC data proceeding 1: AUXADC data ready
3:0	AUXADC_ADC_OUT_THR_HW_H	**AUXADC channel 13 output data bit [11:8]**

© 2015 - 2017 MediaTek Inc.

This document contains information that is proprietary to MediaTek Inc. ("MediaTek") and/or its licensor(s).
Any unauthorized use, reproduction or disclosure of this document in whole or in part is strictly prohibited.

21C **AUXADC_ADC14** **AUXADC ADC register 14** **00**

Bit	7	6	5	4	3	2	1	0
Name	AUXADC_ADC_OUT_LBAT_L							
Type	RO							
Reset	0	0	0	0	0	0	0	0

Bit(s)	Name	Description
7:0	AUXADC_ADC_OUT_LBAT_L	**AUXADC channel 14 output data bit [7:0]**

21D **AUXADC_ADC14_H** **AUXADC ADC register 14_H** **00**

Bit	7	6	5	4	3	2	1	0
Name	AUXADC_ADC_RDY_LBAT				AUXADC_ADC_OUT_LBAT_H			
Type	RO				RO			
Reset	0				0	0	0	0

Bit(s)	Name	Description
7	AUXADC_ADC_RDY_LBAT	**AUXADC channel 14 output data ready** 0: AUXADC data proceeding 1: AUXADC data ready
3:0	AUXADC_ADC_OUT_LBAT_H	**AUXADC channel 14 output data bit [11:8]**

21E **AUXADC_ADC15** **AUXADC ADC register 15** **00**

Bit	7	6	5	4	3	2	1	0
Name	AUXADC_ADC_OUT_LBAT2_L							
Type	RO							
Reset	0	0	0	0	0	0	0	0

Bit(s)	Name	Description
7:0	AUXADC_ADC_OUT_LBAT2_L	**AUXADC channel 15 output data bit [7:0]**

21F **AUXADC_ADC15_H** **AUXADC ADC register 15_H** **00**

Bit	7	6	5	4	3	2	1	0

This document contains information that is proprietary to MediaTek Inc. ("MediaTek") and/or its licensor(s).
Any unauthorized use, reproduction or disclosure of this document in whole or in part is strictly prohibited.

21F **AUXADC_ADC15_H** **AUXADC ADC register 15_H** **00**

Name	AUXADC_ADC_RDY_LBAT2				AUXADC_ADC_OUT_LBAT2_H			
Type	RO				RO			
Reset	0				0	0	0	0

Bit(s)	Name	Description
7	AUXADC_ADC_RDY_LBAT2	**AUXADC channel 15 output data ready** 0: AUXADC data proceeding 1: AUXADC data ready
3:0	AUXADC_ADC_OUT_LBAT2_H	**AUXADC channel 15 output data bit [11:8]**

226 **AUXADC_ADC19** **AUXADC ADC register 19** **00**

Bit	7	6	5	4	3	2	1	0
Name	AUXADC_ADC_OUT_CH4_BY_MD_L							
Type	RO							
Reset	0	0	0	0	0	0	0	0

Bit(s)	Name	Description
7:0	AUXADC_ADC_OUT_CH4_BY_MD_L	**AUXADC channel 19 output data bit [7:0]**

227 **AUXADC_ADC19_H** **AUXADC ADC register 19_H** **00**

Bit	7	6	5	4	3	2	1	0
Name	AUXADC_ADC_RDY_CH4_BY_MD				AUXADC_ADC_OUT_CH4_BY_MD_H			
Type	RO				RO			
Reset	0				0	0	0	0

Bit(s)	Name	Description
7	AUXADC_ADC_RDY_CH4_BY_MD	**AUXADC channel 19 output data ready** 0: AUXADC data proceeding 1: AUXADC data ready
3:0	AUXADC_ADC_OUT_CH4_BY_MD_H	**AUXADC channel 19 output data bit [11:8]**

© 2015 - 2017 MediaTek Inc.

This document contains information that is proprietary to MediaTek Inc. ("MediaTek") and/or its licensor(s).
Any unauthorized use, reproduction or disclosure of this document in whole or in part is strictly prohibited.

228 **AUXADC_ADC20** **AUXADC ADC register 20** **00**

Bit	7	6	5	4	3	2	1	0
Name	AUXADC_ADC_OUT_WAKEUP_PCHR_L							
Type	RO							
Reset	0	0	0	0	0	0	0	0

Bit(s)	Name	Description
7:0	AUXADC_ADC_OUT_WAKEUP_PCHR_L	**AUXADC channel 20 output data bit [7:0]**

229 **AUXADC_ADC20_H** **AUXADC ADC register 20_H** **00**

Bit	7	6	5	4	3	2	1	0
Name	AUXADC_ADC_RDY_WAKEUP_PCHR	AUXADC_ADC_OUT_WAKEUP_PCHR_H						
Type	RO	RO						
Reset	0	0	0	0	0	0	0	0

Bit(s)	Name	Description
7	AUXADC_ADC_RDY_WAKEUP_PCHR	**AUXADC channel 20 output data ready** 0: AUXADC data proceeding 1: AUXADC data ready
6:0	AUXADC_ADC_OUT_WAKEUP_PCHR_H	**AUXADC channel 20 output data bit [14:8]**

22A **AUXADC_ADC21** **AUXADC ADC register 21** **00**

Bit	7	6	5	4	3	2	1	0
Name	AUXADC_ADC_OUT_WAKEUP_SWCHR_L							
Type	RO							
Reset	0	0	0	0	0	0	0	0

Bit(s)	Name	Description
7:0	AUXADC_ADC_OUT_WAKEUP_SWCHR_L	**AUXADC channel 21 output data bit [7:0]**

© 2015 - 2017 MediaTek Inc.

This document contains information that is proprietary to MediaTek Inc. ("MediaTek") and/or its licensor(s).
Any unauthorized use, reproduction or disclosure of this document in whole or in part is strictly prohibited.

22B	AUXADC_ADC21_H	AUXADC ADC register 21_H	00

Bit	7	6	5	4	3	2	1	0
Name	AUXADC_ADC_RDY_WAKEUP_SWCHR	AUXADC_ADC_OUT_WAKEUP_SWCHR_H						
Type	RO	RO						
Reset	0	0	0	0	0	0	0	0

Bit(s)	Name	Description
7	AUXADC_ADC_RDY_WAKEUP_SWCHR	**AUXADC channel 21 output data ready** 0: AUXADC data proceeding 1: AUXADC data ready
6:0	AUXADC_ADC_OUT_WAKEUP_SWCHR_H	**AUXADC channel 21 output data bit [14:8]**

22C	AUXADC_ADC22	AUXADC ADC register 22	00

Bit	7	6	5	4	3	2	1	0
Name	AUXADC_ADC_OUT_CH0_BY_MD_L							
Type	RO							
Reset	0	0	0	0	0	0	0	0

Bit(s)	Name	Description
7:0	AUXADC_ADC_OUT_CH0_BY_MD_L	**AUXADC channel 22 output data bit [7:0]**

22D	AUXADC_ADC22_H	AUXADC ADC register 22_H	00

Bit	7	6	5	4	3	2	1	0
Name	AUXADC_ADC_RDY_CH0_BY_MD	AUXADC_ADC_OUT_CH0_BY_MD_H						
Type	RO	RO						
Reset	0	0	0	0	0	0	0	0

Bit(s)	Name	Description
7	AUXADC_ADC_RDY_CH0_BY_MD	**AUXADC channel 22 output data ready** 0: AUXADC data proceeding 1: AUXADC data ready
6:0	AUXADC_ADC_OUT_CH0_BY_MD_H	**AUXADC channel 22 output data bit [14:8]**

© 2015 - 2017 MediaTek Inc.

This document contains information that is proprietary to MediaTek Inc. ("MediaTek") and/or its licensor(s).
Any unauthorized use, reproduction or disclosure of this document in whole or in part is strictly prohibited.

22E **AUXADC_ADC23** **AUXADC ADC register 23** **00**

Bit	7	6	5	4	3	2	1	0
Name	AUXADC_ADC_OUT_CH0_BY_AP_L							
Type	RO							
Reset	0	0	0	0	0	0	0	0

Bit(s)	Name	Description
7:0	AUXADC_ADC_OUT_CH0_BY_AP_L	**AUXADC channel 23 output data bit [7:0]**

22F **AUXADC_ADC23_H** **AUXADC ADC register 23_H** **00**

Bit	7	6	5	4	3	2	1	0
Name	AUXADC_ADC_RDY_CH0_BY_AP	AUXADC_ADC_OUT_CH0_BY_AP_H						
Type	RO	RO						
Reset	0	0	0	0	0	0	0	0

Bit(s)	Name	Description
7	AUXADC_ADC_RDY_CH0_BY_AP	**AUXADC channel 23 output data ready** 0: AUXADC data proceeding 1: AUXADC data ready
6:0	AUXADC_ADC_OUT_CH0_BY_AP_H	**AUXADC channel 23 output data bit [14:8]**

230 **AUXADC_ADC24** **AUXADC ADC register 24** **00**

Bit	7	6	5	4	3	2	1	0
Name	AUXADC_ADC_OUT_CH1_BY_MD_L							
Type	RO							
Reset	0	0	0	0	0	0	0	0

Bit(s)	Name	Description
7:0	AUXADC_ADC_OUT_CH1_BY_MD_L	**AUXADC channel 24 output data bit [7:0]**

231 **AUXADC_ADC24_H** **AUXADC ADC register 24_H** **00**

© 2015 - 2017 MediaTek Inc.

This document contains information that is proprietary to MediaTek Inc. ("MediaTek") and/or its licensor(s).
Any unauthorized use, reproduction or disclosure of this document in whole or in part is strictly prohibited.

231 **AUXADC_ADC24_H** **AUXADC ADC register 24_H** **00**

Bit	7	6	5	4	3	2	1	0
Name	AUXADC_ADC_RDY_CH1_BY_MD	AUXADC_ADC_OUT_CH1_BY_MD_H						
Type	RO	RO						
Reset	0	0	0	0	0	0	0	0

Bit(s)	Name	Description
7	AUXADC_ADC_RDY_CH1_BY_MD	**AUXADC channel 24 output data ready** 0: AUXADC data proceeding 1: AUXADC data ready
6:0	AUXADC_ADC_OUT_CH1_BY_MD_H	**AUXADC channel 24 output data bit [14:8]**

232 **AUXADC_ADC25** **AUXADC ADC register 25** **00**

Bit	7	6	5	4	3	2	1	0
Name	AUXADC_ADC_OUT_CH1_BY_AP_L							
Type	RO							
Reset	0	0	0	0	0	0	0	0

Bit(s)	Name	Description
7:0	AUXADC_ADC_OUT_CH1_BY_AP_L	**AUXADC channel 25 output data bit [7:0]**

233 **AUXADC_ADC25_H** **AUXADC ADC register 25_H** **00**

Bit	7	6	5	4	3	2	1	0
Name	AUXADC_ADC_RDY_CH1_BY_AP	AUXADC_ADC_OUT_CH1_BY_AP_H						
Type	RO	RO						
Reset	0	0	0	0	0	0	0	0

Bit(s)	Name	Description
7	AUXADC_ADC_RDY_CH1_BY_AP	**AUXADC channel 25 output data ready** 0: AUXADC data proceeding 1: AUXADC data ready
6:0	AUXADC_ADC_OUT_CH1_BY_AP_H	**AUXADC channel 25 output data bit [14:8]**

© 2015 - 2017 MediaTek Inc.

This document contains information that is proprietary to MediaTek Inc. ("MediaTek") and/or its licensor(s).
Any unauthorized use, reproduction or disclosure of this document in whole or in part is strictly prohibited.

234 **AUXADC_ADC26** **AUXADC ADC register 26** **00**

Bit	7	6	5	4	3	2	1	0
Name	AUXADC_ADC_OUT_VISMPSo_L							
Type	RO							
Reset	0	0	0	0	0	0	0	0

Bit(s)	Name	Description
7:0	AUXADC_ADC_OUT_VISMPSo_L	**AUXADC channel 26 output data bit [7:0]**

235 **AUXADC_ADC26_H** **AUXADC ADC register 26_H** **00**

Bit	7	6	5	4	3	2	1	0
Name	AUXADC_ADC_RDY_VISMPSo				AUXADC_ADC_OUT_VISMPSo_H			
Type	RO				RO			
Reset	0				0	0	0	0

Bit(s)	Name	Description
7	AUXADC_ADC_RDY_VISMPSo	**AUXADC channel 26 output data ready** 0: AUXADC data proceeding 1: AUXADC data ready
3:0	AUXADC_ADC_OUT_VISMPSo_H	**AUXADC channel 26 output data bit [11:8]**

236 **AUXADC_ADC27** **AUXADC ADC register 27** **00**

Bit	7	6	5	4	3	2	1	0
Name	AUXADC_ADC_OUT_FGADC1_L							
Type	RO							
Reset	0	0	0	0	0	0	0	0

Bit(s)	Name	Description
7:0	AUXADC_ADC_OUT_FGADC1_L	**AUXADC channel 27 output data bit [7:0]**

237 **AUXADC_ADC27_H** **AUXADC ADC register 27_H** **00**

Bit	7	6	5	4	3	2	1	0

This document contains information that is proprietary to MediaTek Inc. ("MediaTek") and/or its licensor(s).
Any unauthorized use, reproduction or disclosure of this document in whole or in part is strictly prohibited.

237 **AUXADC_ADC27_H** **AUXADC ADC register 27_H** **00**

Name	AUXADC_ADC_RDY_FGADC1	AUXADC_ADC_OUT_FGADC1_H						
Type	RO	RO						
Reset	0	0	0	0	0	0	0	0

Bit(s)	Name	Description
7	AUXADC_ADC_RDY_FGADC1	**AUXADC channel 27 output data ready** 0: AUXADC data proceeding 1: AUXADC data ready
6:0	AUXADC_ADC_OUT_FGADC1_H	**AUXADC channel 27 output data bit [14:8]**

238 **AUXADC_ADC28** **AUXADC ADC register 28** **00**

Bit	7	6	5	4	3	2	1	0
Name	AUXADC_ADC_OUT_FGADC2_L							
Type	RO							
Reset	0	0	0	0	0	0	0	0

Bit(s)	Name	Description
7:0	AUXADC_ADC_OUT_FGADC2_L	**AUXADC channel 28 output data bit [7:0]**

239 **AUXADC_ADC28_H** **AUXADC ADC register 28_H** **00**

Bit	7	6	5	4	3	2	1	0
Name	AUXADC_ADC_RDY_FGADC2	AUXADC_ADC_OUT_FGADC2_H						
Type	RO	RO						
Reset	0	0	0	0	0	0	0	0

Bit(s)	Name	Description
7	AUXADC_ADC_RDY_FGADC2	**AUXADC channel 28 output data ready** 0: AUXADC data proceeding 1: AUXADC data ready
6:0	AUXADC_ADC_OUT_FGADC2_H	**AUXADC channel 28 output data bit [14:8]**

© 2015 - 2017 MediaTek Inc.

This document contains information that is proprietary to MediaTek Inc. ("MediaTek") and/or its licensor(s).
Any unauthorized use, reproduction or disclosure of this document in whole or in part is strictly prohibited.

23A **AUXADC_ADC29** **AUXADC ADC register 29** **00**

Bit	7	6	5	4	3	2	1	0
Name	AUXADC_ADC_OUT_IMP_L							
Type	RO							
Reset	0	0	0	0	0	0	0	0

Bit(s)	Name	Description
7:0	AUXADC_ADC_OUT_IMP_L	**AUXADC channel 29 output data bit [7:0]**

23B **AUXADC_ADC29_H** **AUXADC ADC register 29_H** **00**

Bit	7	6	5	4	3	2	1	0
Name	AUXADC_ADC_RDY_IMP	AUXADC_ADC_OUT_IMP_H						
Type	RO	RO						
Reset	0	0	0	0	0	0	0	0

Bit(s)	Name	Description
7	AUXADC_ADC_RDY_IMP	**AUXADC channel 29 output data ready** 0: AUXADC data proceeding 1: AUXADC data ready
6:0	AUXADC_ADC_OUT_IMP_H	**AUXADC channel 29 output data bit [14:8]**

23C **AUXADC_ADC30** **AUXADC ADC register 30** **00**

Bit	7	6	5	4	3	2	1	0
Name	AUXADC_ADC_OUT_IMP_AVG_L							
Type	RO							
Reset	0	0	0	0	0	0	0	0

Bit(s)	Name	Description
7:0	AUXADC_ADC_OUT_IMP_AVG_L	**AUXADC channel 30 output data bit [7:0]**

23D **AUXADC_ADC30_H** **AUXADC1 ADC register 0_H** **00**

Bit	7	6	5	4	3	2	1	0
Name	AUXADC	AUXADC_ADC_OUT_IMP_AVG_H						

© 2015 - 2017 MediaTek Inc.

This document contains information that is proprietary to MediaTek Inc. ("MediaTek") and/or its licensor(s).
Any unauthorized use, reproduction or disclosure of this document in whole or in part is strictly prohibited.

23D **AUXADC_ADC30_H** **AUXADC1 ADC register 0_H** **00**

	_ADC_RDY_IMP_AVG							
Type	RO	RO						
Reset	0	0	0	0	0	0	0	0

Bit(s)	Name	Description
7	AUXADC_ADC_RDY_IMP_AVG	**AUXADC channel 30 output data ready** 0: AUXADC data proceeding 1: AUXADC data ready
6:0	AUXADC_ADC_OUT_IMP_AVG_H	**AUXADC channel 30 output data bit [14:8]**

23E **AUXADC_ADC31** **AUXADC ADC register 31** **00**

Bit	7	6	5	4	3	2	1	0
Name	AUXADC_ADC_OUT_RAW_L							
Type	RO							
Reset	0	0	0	0	0	0	0	0

Bit(s)	Name	Description
7:0	AUXADC_ADC_OUT_RAW_L	**AUXADC channel 31 output data bit [7:0]**

23F **AUXADC_ADC31_H** **AUXADC1 ADC register 1_H** **00**

Bit	7	6	5	4	3	2	1	0
Name		AUXADC_ADC_OUT_RAW_H						
Type		RO						
Reset		0	0	0	0	0	0	0

Bit(s)	Name	Description
6:0	AUXADC_ADC_OUT_RAW_H	**AUXADC channel 31 output data bit [14:8]**

240 **AUXADC_ADC32** **AUXADC ADC register 32** **00**

Bit	7	6	5	4	3	2	1	0
Name	AUXADC_ADC_OUT_MDRT_L							
Type	RO							

© 2015 - 2017 MediaTek Inc.

This document contains information that is proprietary to MediaTek Inc. ("MediaTek") and/or its licensor(s).
Any unauthorized use, reproduction or disclosure of this document in whole or in part is strictly prohibited.

240	AUXADC_ADC32	AUXADC ADC register 32	00

Reset	0	0	0	0	0	0	0	0

Bit(s)	Name	Description
7:0	AUXADC_ADC_OUT_MDRT_L	**AUXADC channel 32 output data bit [7:0]**

241	AUXADC_ADC32_H	AUXADC1 ADC register 2_H	00

Bit	7	6	5	4	3	2	1	0
Name	AUXADC_ADC_RDY_MDRT	AUXADC_ADC_OUT_MDRT_H						
Type	RO	RO						
Reset	0	0	0	0	0	0	0	0

Bit(s)	Name	Description
7	AUXADC_ADC_RDY_MDRT	**AUXADC channel 32 output data ready** 0: AUXADC data proceeding 1: AUXADC data ready
6:0	AUXADC_ADC_OUT_MDRT_H	**AUXADC channel 32 output data bit [14:8]**

242	AUXADC_ADC33	AUXADC ADC register 33	00

Bit	7	6	5	4	3	2	1	0
Name	AUXADC_ADC_OUT_JEITA_L							
Type	RO							
Reset	0	0	0	0	0	0	0	0

Bit(s)	Name	Description
7:0	AUXADC_ADC_OUT_JEITA_L	**AUXADC output data**

243	AUXADC_ADC33_H	AUXADC1 ADC register 3_H	00

Bit	7	6	5	4	3	2	1	0
Name	AUXADC_ADC_RDY_JEIT				AUXADC_ADC_OUT_JEITA_H			

© 2015 - 2017 MediaTek Inc.

This document contains information that is proprietary to MediaTek Inc. ("MediaTek") and/or its licensor(s).
Any unauthorized use, reproduction or disclosure of this document in whole or in part is strictly prohibited.

243 **AUXADC_ADC33_H** **AUXADC1 ADC register 3_H** **00**

	A							
Type	RO				RO			
Reset	0				0	0	0	0

Bit(s)	Name	Description
7	AUXADC_ADC_RDY_JEITA	**AUXADC output data ready** 0: AUXADC data proceeding 1: AUXADC data ready
3:0	AUXADC_ADC_OUT_JEITA_H	**AUXADC output data**

244 **AUXADC_ADC34** **AUXADC ADC register 34** **00**

Bit	7	6	5	4	3	2	1	0
Name	AUXADC_ADC_OUT_DCXO_BY_GPS_L							
Type	RO							
Reset	0	0	0	0	0	0	0	0

Bit(s)	Name	Description
7:0	AUXADC_ADC_OUT_DCXO_BY_GPS_L	**AUXADC channel 4 output data**

245 **AUXADC_ADC34_H** **AUXADC1 ADC register 4_H** **00**

Bit	7	6	5	4	3	2	1	0
Name	AUXADC_ADC_RDY_DCXO_BY_GPS				AUXADC_ADC_OUT_DCXO_BY_GPS_H			
Type	RO				RO			
Reset	0				0	0	0	0

Bit(s)	Name	Description
7	AUXADC_ADC_RDY_DCXO_BY_GPS	**AUXADC channel 4 output data ready** 0: AUXADC data proceeding 1: AUXADC data ready
3:0	AUXADC_ADC_OUT_DCXO_BY_GPS_H	**AUXADC channel 4 output data**

© 2015 - 2017 MediaTek Inc.

This document contains information that is proprietary to MediaTek Inc. ("MediaTek") and/or its licensor(s).
Any unauthorized use, reproduction or disclosure of this document in whole or in part is strictly prohibited.

246 **AUXADC_ADC35** **AUXADC ADC register 35** **00**

Bit	7	6	5	4	3	2	1	0
Name	AUXADC_ADC_OUT_DCXO_BY_MD_L							
Type	RO							
Reset	0	0	0	0	0	0	0	0

Bit(s)	Name	Description
7:0	AUXADC_ADC_OUT_DCXO_BY_MD_L	**AUXADC channel 4 output data**

247 **AUXADC_ADC35_H** **AUXADC ADC register 33_H** **00**

Bit	7	6	5	4	3	2	1	0
Name	AUXADC_ADC_RDY_DCXO_BY_MD				AUXADC_ADC_OUT_DCXO_BY_MD_H			
Type	RO				RO			
Reset	0				0	0	0	0

Bit(s)	Name	Description
7	AUXADC_ADC_RDY_DCXO_BY_MD	**AUXADC channel 4 output data ready** 0: AUXADC data proceeding 1: AUXADC data ready
3:0	AUXADC_ADC_OUT_DCXO_BY_MD_H	**AUXADC channel 4 output data**

248 **AUXADC_ADC36** **AUXADC ADC register 36** **00**

Bit	7	6	5	4	3	2	1	0
Name	AUXADC_ADC_OUT_DCXO_BY_AP_L							
Type	RO							
Reset	0	0	0	0	0	0	0	0

Bit(s)	Name	Description
7:0	AUXADC_ADC_OUT_DCXO_BY_AP_L	**AUXADC channel 4 output data ready** 0: AUXADC data proceeding 1: AUXADC data ready

© 2015 - 2017 MediaTek Inc.

This document contains information that is proprietary to MediaTek Inc. ("MediaTek") and/or its licensor(s).
Any unauthorized use, reproduction or disclosure of this document in whole or in part is strictly prohibited.

249	AUXADC_ADC36_H	AUXADC ADC register _H	00

Bit	7	6	5	4	3	2	1	0
Name	AUXADC_ADC_RDY_DCXO_BY_AP				AUXADC_ADC_OUT_DCXO_BY_AP_H			
Type	RO				RO			
Reset	0				0	0	0	0

Bit(s)	Name	Description
7	AUXADC_ADC_RDY_DCXO_BY_AP	**AUXADC channel 4 output data ready** 0: AUXADC data proceeding 1: AUXADC data ready
3:0	AUXADC_ADC_OUT_DCXO_BY_AP_H	**AUXADC channel 4 output data**

24A	AUXADC_ADC37	AUXADC ADC register 37	00

Bit	7	6	5	4	3	2	1	0
Name	AUXADC_ADC_OUT_DCXO_MDRT_L							
Type	RO							
Reset	0	0	0	0	0	0	0	0

Bit(s)	Name	Description
7:0	AUXADC_ADC_OUT_DCXO_MDRT_L	**AUXADC output data**

24B	AUXADC_ADC37_H	AUXADC1 ADC register _H	00

Bit	7	6	5	4	3	2	1	0
Name	AUXADC_ADC_RDY_DCXO_MDRT				AUXADC_ADC_OUT_DCXO_MDRT_H			
Type	RO				RO			
Reset	0				0	0	0	0

Bit(s)	Name	Description
7	AUXADC_ADC_RDY_DCXO_MDRT	**AUXADC output data ready** 0: AUXADC data proceeding 1: AUXADC data ready
3:0	AUXADC_ADC_OUT_DCXO_MDRT_H	**AUXADC output data**

© 2015 - 2017 MediaTek Inc.

This document contains information that is proprietary to MediaTek Inc. ("MediaTek") and/or its licensor(s).
Any unauthorized use, reproduction or disclosure of this document in whole or in part is strictly prohibited.

24C **AUXADC_ADC38** **AUXADC ADC register 34_H** **00**

Bit	7	6	5	4	3	2	1	0
Name	AUXADC_ADC_OUT_NAG_L							
Type	RO							
Reset	0	0	0	0	0	0	0	0

Bit(s)	Name	Description
7:0	AUXADC_ADC_OUT_NAG_L	

24D **AUXADC_ADC38_H** **AUXADC1 ADC register 34_H** **00**

Bit	7	6	5	4	3	2	1	0
Name	AUXADC_ADC_RDY_NAG	AUXADC_ADC_OUT_NAG_H						
Type	RO	RO						
Reset	0	0	0	0	0	0	0	0

Bit(s)	Name	Description
7	AUXADC_ADC_RDY_NAG	
6:0	AUXADC_ADC_OUT_NAG_H	

24E **AUXADC_STA0** **AUXADC_STA0** **00**

Bit	7	6	5	4	3	2	1	0
Name	AUXADC_ADC_BUSY_IN_L							
Type	RO							
Reset	0	0	0	0	0	0	0	0

Bit(s)	Name	Description
7:0	AUXADC_ADC_BUSY_IN_L	**AUXADC ADC BUSY STATUS_L, bit[7] = CH7 ~ bit[0] = CH0** 1: BUSY 0: IDLE

24F **AUXADC_STA0_H** **AUXADC_STA0_H** **00**

Bit	7	6	5	4	3	2	1	0
Name	AUXADC_ADC_BUSY_IN_WAKEUP	AUXADC_ADC_BUSY_IN_VISMPS0	AUXADC_ADC_BUSY_IN_LBAT2	AUXADC_ADC_BUSY_IN_LBAT	AUXADC_ADC_BUSY_IN_H			

This document contains information that is proprietary to MediaTek Inc. ("MediaTek") and/or its licensor(s).
Any unauthorized use, reproduction or disclosure of this document in whole or in part is strictly prohibited.

24F **AUXADC_STA0_H** **AUXADC_STA0_H** **00**

Type	RO	RO	RO	RO	RO			
Reset	0	0	0	0	0	0	0	0

Bit(s)	Name	Description
7	AUXADC_ADC_BUSY_IN_WAKEUP	**ADC busy status** 1: BUSY 0: IDLE
6	AUXADC_ADC_BUSY_IN_VISMPS0	**ADC busy status** 1: BUSY 0: IDLE
5	AUXADC_ADC_BUSY_IN_LBAT2	**ADC busy status** 1: BUSY 0: IDLE
4	AUXADC_ADC_BUSY_IN_LBAT	**ADC busy status** 1: BUSY 0: IDLE
3:0	AUXADC_ADC_BUSY_IN_H	**AUXADC ADC BUSY STATUS_H, bit[3] = CH11 ~ bit[0] = CH8** 1: BUSY 0: IDLE

250 **AUXADC_STA1** **AUXADC_STA1** **00**

Bit	7	6	5	4	3	2	1	0
Name	AUXADC_ADC_BUSY_IN_SHARE	AUXADC_ADC_BUSY_IN_MDRT	AUXADC_ADC_BUSY_IN_JEITA	AUXADC_ADC_BUSY_IN_NAG	AUXADC_ADC_BUSY_IN_DCXO_GPS	AUXADC_ADC_BUSY_IN_DCXO_GPS_MD	AUXADC_ADC_BUSY_IN_DCXO_GPS_AP	AUXADC_ADC_BUSY_IN_DCXO_MDRT
Type	RO	RO	RO	RO	RO	RO	RO	RO
Reset	0	0	0	0	0	0	0	0

Bit(s)	Name	Description
7	AUXADC_ADC_BUSY_IN_SHARE	**ADC busy status** 1: BUSY 0: IDLE
6	AUXADC_ADC_BUSY_IN_MDRT	**ADC busy status** 1: BUSY 0: IDLE
5	AUXADC_ADC_BUSY_IN_JEITA	**ADC busy status** 1: BUSY 0: IDLE
4	AUXADC_ADC_BUSY_IN_NAG	**ADC busy status** 1: BUSY 0: IDLE
3	AUXADC_ADC_BUSY_IN_DCXO_GPS	**ADC busy status** 1: BUSY 0: IDLE
2	AUXADC_ADC_BUSY_IN_DCXO_GPS_MD	**ADC busy status** 1: BUSY 0: IDLE

© 2015 - 2017 MediaTek Inc.

This document contains information that is proprietary to MediaTek Inc. (“MediaTek”) and/or its licensor(s).
Any unauthorized use, reproduction or disclosure of this document in whole or in part is strictly prohibited.

Bit(s)	Name	Description
1	AUXADC_ADC_BUSY_IN_DCXO_GPS_AP	**ADC busy status** 1: BUSY 0: IDLE
0	AUXADC_ADC_BUSY_IN_DCXO_MDRT	**ADC busy status** 1: BUSY 0: IDLE

251 **AUXADC_STA1_H** **AUXADC_STA1_H** **00**

Bit	7	6	5	4	3	2	1	0
Name	**AUXADC_ADC_BUSY_IN_THR_MD**	**AUXADC_ADC_BUSY_IN_THR_HW**				**AUXADC_ADC_BUSY_IN_FGADC2**	**AUXADC_ADC_BUSY_IN_FGADC1**	**AUXADC_ADC_BUSY_IN_IMP**
Type	RO	RO				RO	RO	RO
Reset	0	0				0	0	0

Bit(s)	Name	Description
7	AUXADC_ADC_BUSY_IN_THR_MD	**ADC busy status** 1: BUSY 0: IDLE
6	AUXADC_ADC_BUSY_IN_THR_HW	**ADC busy status** 1: BUSY 0: IDLE
2	AUXADC_ADC_BUSY_IN_FGADC2	**ADC busy status** 1: BUSY 0: IDLE
1	AUXADC_ADC_BUSY_IN_FGADC1	**ADC busy status** 1: BUSY 0: IDLE
0	AUXADC_ADC_BUSY_IN_IMP	**ADC busy status** 1: BUSY 0: IDLE

2BE **AUXADC_LBAT2_4** **AUXADC_LBAT2_4** **00**

Bit	7	6	5	4	3	2	1	0
Name	**AUXADC_LBAT2_VOLT_MAX**							
Type	RW							
Reset	0	0	0	0	0	0	0	0

Bit(s)	Name	Description
7:0	AUXADC_LBAT2_VOLT_MAX	**LBAT2 detection voltage setting**

© 2015 - 2017 MediaTek Inc.
This document contains information that is proprietary to MediaTek Inc. ("MediaTek") and/or its licensor(s).
Any unauthorized use, reproduction or disclosure of this document in whole or in part is strictly prohibited.

2BF **AUXADC_LBAT2_4_H** **AUXADC_LBAT2_4_H** **80**

Bit	7	6	5	4	3	2	1	0
Name					AUXADC_LBAT2_VOLT_MAXa			
Type					RW			
Reset					0	0	0	0

Bit(s)	Name	Description
3:0	AUXADC_LBAT2_VOLT_MAXa	**LBAT2 detection voltage setting**

2C0 **AUXADC_LBAT2_5** **AUXADC_LBAT2_5** **00**

Bit	7	6	5	4	3	2	1	0
Name	AUXADC_LBAT2_VOLT_MIN							
Type	RW							
Reset	0	0	0	0	0	0	0	0

Bit(s)	Name	Description
7:0	AUXADC_LBAT2_VOLT_MIN	**LBAT2 detection voltage setting**

2C1 **AUXADC_LBAT2_5_H** **AUXADC_LBAT2_5_H** **80**

Bit	7	6	5	4	3	2	1	0
Name					AUXADC_LBAT2_VOLT_MINa			
Type					RW			
Reset					0	0	0	0

Bit(s)	Name	Description
3:0	AUXADC_LBAT2_VOLT_MINa	**LBAT2 detection voltage setting**

2EF **VBTLDO0** **VBTLDO register 0** **00**

Bit	7	6	5	4	3	2	1	0
Name					RG_VBT_CAL			
Type					RW			
Reset					0	0	0	0

Bit(s)	Name	Description
3:0	RG_VBT_CAL	

© 2015 - 2017 MediaTek Inc.

This document contains information that is proprietary to MediaTek Inc. ("MediaTek") and/or its licensor(s).
Any unauthorized use, reproduction or disclosure of this document in whole or in part is strictly prohibited.

2F3 **VBTLDOBF0** **VBT LDO buffer register 0** **00**

Bit	7	6	5	4	3	2	1	0
Name					RG_VBT_BUF_CAL			
Type					RW			
Reset					0	0	0	0

Bit(s)	Name	Description
3:0	RG_VBT_BUF_CAL	

2F5 **VBTPSI0** **VBTP LDO PSI register 0** **00**

Bit	7	6	5	4	3	2	1	0
Name		RG_LP_VBT_PMOD				RG_HP_VBT_PMOD		
Type		RW				RW		
Reset		0	0			0	0	

Bit(s)	Name	Description
6:5	RG_LP_VBT_PMOD	
2:1	RG_HP_VBT_PMOD	

2F6 **VBTPSI1** **VBTP LDO PSI register 1** **00**

Bit	7	6	5	4	3	2	1	0
Name		RG_S1_VBT_PMOD		RGS_S1_VBT_ON		RG_S0_VBT_PMOD		RGS_S0_VBT_ON
Type		RW		RO		RW		RO
Reset		0	0	0		0	0	0

Bit(s)	Name	Description
6:5	RG_S1_VBT_PMOD	
4	RGS_S1_VBT_ON	
2:1	RG_S0_VBT_PMOD	
0	RGS_S0_VBT_ON	

© 2015 - 2017 MediaTek Inc.

This document contains information that is proprietary to MediaTek Inc. (“MediaTek”) and/or its licensor(s).
Any unauthorized use, reproduction or disclosure of this document in whole or in part is strictly prohibited.

2F8 **VALDO0** **VA LDO registe r 0** **00**

Bit	7	6	5	4	3	2	1	0
Name					RG_VA_CAL			
Type					RW			
Reset					0	0	0	0

Bit(s)	Name	Description
3:0	RG_VA_CAL	

2FC **VALDOBF0** **VA LDO buffer registe r 0** **00**

Bit	7	6	5	4	3	2	1	0
Name					RG_VA_BUF_CAL			
Type					RW			
Reset					0	0	0	0

Bit(s)	Name	Description
3:0	RG_VA_BUF_CAL	

2FE **VAPSI0** **VA LDO PSI registe r0** **00**

Bit	7	6	5	4	3	2	1	0
Name		RG_LP_VA_PMOD				RG_HP_VA_PMOD		
Type		RW				RW		
Reset		0	0			0	0	

Bit(s)	Name	Description
6:5	RG_LP_VA_PMOD	
2:1	RG_HP_VA_PMOD	

2FF **VAPSI1** **VA LDO PSI registe r1** **00**

Bit	7	6	5	4	3	2	1	0
Name		RG_S1_VA_PMOD		RGS_S1_VA_ON		RG_S0_VA_PMOD		RGS_S0_VA_ON
Type		RW		RO		RW		RO
Reset		0	0	0		0	0	0

© 2015 - 2017 MediaTek Inc.

This document contains information that is proprietary to MediaTek Inc. (“MediaTek”) and/or its licensor(s).
Any unauthorized use, reproduction or disclosure of this document in whole or in part is strictly prohibited.

Bit(s)	Name	Description
6:5	RG_S1_VA_PMOD	
4	RGS_S1_VA_ON	
2:1	RG_S0_VA_PMOD	
0	RGS_S0_VA_ON	

300 **VCAMACTL0** **VCAMA Control register 0** **00**

Bit	7	6	5	4	3	2	1	0
Name					RG_OVR_VCAMA_PMOD		RG_VCAMA_OCFB_EN	RG_VCAMA_EN
Type					RW		RW	RW
Reset					0	0	0	0

Bit(s)	Name	Description
3:2	RG_OVR_VCAMA_PMOD	
1	RG_VCAMA_OCFB_EN	
0	RG_VCAMA_EN	

302 **VCAMALDO0** **VCAMALDO0** **00**

Bit	7	6	5	4	3	2	1	0
Name					RG_VCAMA_CAL			
Type					RW			
Reset					0	0	0	0

Bit(s)	Name	Description
3:0	RG_VCAMA_CAL	

303 **VCAMALDO1** **VCAMA LDO register 1** **03**

Bit	7	6	5	4	3	2	1	0
Name						RG_VCAMA_VOSEL		
Type						RW		
Reset						0	1	1

Bit(s)	Name	Description
2:0	RG_VCAMA_VOSEL	3'b000: 1.5 V 3'b001: 1.8 V 3'b010: 2.5 V 3'b011: 2.8 V

© 2015 - 2017 MediaTek Inc.

This document contains information that is proprietary to MediaTek Inc. ("MediaTek") and/or its licensor(s).
Any unauthorized use, reproduction or disclosure of this document in whole or in part is strictly prohibited.

Bit(s)	Name	Description
		3'b100: Reserved 3'b101: Reserved 3'b110: Reserved 3'b111: Reserved

306 **VCAMALDOBF0** **VCAMA LDO buffer register 0** **00**

Bit	7	6	5	4	3	2	1	0
Name		RG_VCAMA_COIN_SS_TRIM_BIAS			RG_VCAMA_BUF_CAL			
Type		RW			RW			
Reset		0	0	0	0	0	0	0

Bit(s)	Name	Description
6:4	RG_VCAMA_COIN_SS_TRIM_BIAS	
3:0	RG_VCAMA_BUF_CAL	

30A **PSWCTL0** **PSW Control register 0** **00**

Bit	7	6	5	4	3	2	1	0
Name						RG_SWMP_EN	RG_SWDP_EN	RG_SWXM_EN
Type						RW	RW	RW
Reset						0	0	0

Bit(s)	Name	Description
2	RG_SWMP_EN	
1	RG_SWDP_EN	
0	RG_SWXM_EN	

30F **SWIO18PSI** **SWIO18 LDO PSI register** **00**

Bit	7	6	5	4	3	2	1	0
Name					RGS_S1_SWDP_ON	RGS_S0_SWDP_ON	RGS_S1_SWXM_ON	RGS_S0_SWXM_ON
Type					RO	RO	RO	RO
Reset					0	0	0	0

Bit(s)	Name	Description

© 2015 - 2017 MediaTek Inc.
This document contains information that is proprietary to MediaTek Inc. ("MediaTek") and/or its licensor(s).
Any unauthorized use, reproduction or disclosure of this document in whole or in part is strictly prohibited.

Bit(s)	Name	Description
3	RGS_S1_SWDP_ON	
2	RGS_S0_SWDP_ON	
1	RGS_S1_SWXM_ON	
0	RGS_S0_SWXM_ON	

313 **VIO28LDO0** **VIO28 LDO0** **00**

Bit	7	6	5	4	3	2	1	0
Name					RG_VIO28_CAL_E1			
Type					RW			
Reset					0	0	0	0

Bit(s)	Name	Description
3:0	RG_VIO28_CAL_E1	4'b0000: 0 mV 4'b0001: -20 mV 4'b0010: -40 mV 4'b0011: -60 mV 4'b0100: -80 mV 4'b0101: -100 mV 4'b0110: -120 mV 4'b0111: -140 mV 4'b1000: +160 mV 4'b1001: +140 mV 4'b1010: +120 mV 4'b1011: +100 mV 4'b1100: +80 mV 4'b1101: +60 mV 4'b1110: +40 mV 4'b1111: +20 mV

317 **VIO28LDOBF0** **VIO28 LDOBF0** **00**

Bit	7	6	5	4	3	2	1	0
Name					RG_VIO28_BUF_CAL_E1			
Type					RW			
Reset					0	0	0	0

Bit(s)	Name	Description
3:0	RG_VIO28_BUF_CAL_E1	4'b0000: 0 mV 4'b0001: -20 mV 4'b0010: -40 mV 4'b0011: -60 mV 4'b0100: -80 mV 4'b0101: -100 mV 4'b0110: -120 mV 4'b0111: -140 mV 4'b1000: +160 mV 4'b1001: +140 mV 4'b1010: +120 mV 4'b1011: +100 mV 4'b1100: +80 mV 4'b1101: +60 mV

© 2015 - 2017 MediaTek Inc.

This document contains information that is proprietary to MediaTek Inc. (“MediaTek”) and/or its licensor(s).
Any unauthorized use, reproduction or disclosure of this document in whole or in part is strictly prohibited.

Bit(s)	Name	Description
		4'b1110: +40 mV 4'b1111: +20 mV

319 **VIO28PSI0** **VIO28 LDO PSI register 0** **00**

Bit	7	6	5	4	3	2	1	0
Name		RG_LP_VIO28_PMOD_E1				RG_HP_VIO28_PMOD_E1		
Type		RW				RW		
Reset		0	0			0	0	

Bit(s)	Name	Description
6:5	RG_LP_VIO28_PMOD_E1	
2:1	RG_HP_VIO28_PMOD_E1	

31A **VIO28PSI1** **VIO28 LDO PSI register 1** **00**

Bit	7	6	5	4	3	2	1	0
Name		RG_S1_VIO28_PMOD_E1		RGS_S1_VIO28_ON_E1		RG_S0_VIO28_PMOD_E1		RGS_S0_VIO28_ON_E1
Type		RW		RO		RW		RO
Reset		0	0	0		0	0	0

Bit(s)	Name	Description
6:5	RG_S1_VIO28_PMOD_E1	
4	RGS_S1_VIO28_ON_E1	
2:1	RG_S0_VIO28_PMOD_E1	
0	RGS_S0_VIO28_ON_E1	

31C **VMCLDO0** **VMCLDO0** **00**

Bit	7	6	5	4	3	2	1	0
Name					RG_VMC_CAL			
Type					RW			
Reset					0	0	0	0

Bit(s)	Name	Description

© 2015 - 2017 MediaTek Inc.

This document contains information that is proprietary to MediaTek Inc. ("MediaTek") and/or its licensor(s).
Any unauthorized use, reproduction or disclosure of this document in whole or in part is strictly prohibited.

Bit(s)	Name	Description
3:0	RG_VMC_CAL	

31D **VMCLDO1** **VMCL DO1** **02**

Bit	7	6	5	4	3	2	1	0
Name							RG_VMC_VOSEL	
Type							RW	
Reset							1	0

Bit(s)	Name	Description
1:0	RG_VMC_VOSEL	2'b00: 1.8V 2'b01: 2.8V 2'b10: 3V 2b'11: 3.3V

320 **VMCLDOBF0** **VMCL DOBF0** **00**

Bit	7	6	5	4	3	2	1	0
Name					RG_VMC_BUF_CAL			
Type					RW			
Reset					0	0	0	0

Bit(s)	Name	Description
3:0	RG_VMC_BUF_CAL	

322 **VMCPSI0** **VMC LDO PSI registe r0** **00**

Bit	7	6	5	4	3	2	1	0
Name		RG_LP_VMC_PMOD				RG_HP_VMC_PMOD		
Type		RW				RW		
Reset		0	0			0	0	

Bit(s)	Name	Description
6:5	RG_LP_VMC_PMOD	
2:1	RG_HP_VMC_PMOD	

323 **VMCPSI1** **VMC LDO PSI registe r1** **00**

Bit	7	6	5	4	3	2	1	0

© 2015 - 2017 MediaTek Inc.

This document contains information that is proprietary to MediaTek Inc. (“MediaTek”) and/or its licensor(s).
Any unauthorized use, reproduction or disclosure of this document in whole or in part is strictly prohibited.

323 **VMCPSI1** **VMC LDO PSI register1** **00**

Name		RG_S1_VMC_PMOD		RGS_S1_VMC_ON		RG_S0_VMC_PMOD		RGS_S0_VMC_ON
Type		RW		RO		RW		RO
Reset		0	0	0		0	0	0

Bit(s)	Name	Description
6:5	RG_S1_VMC_PMOD	
4	RGS_S1_VMC_ON	
2:1	RG_S0_VMC_PMOD	
0	RGS_S0_VMC_ON	

324 **VIBRCTL0** **VIBR Control register 0** **00**

Bit	7	6	5	4	3	2	1	0
Name			RG_VIBR_STBTD		RG_OVR_VIBR_PMOD		RG_VIBR_OCFB_EN	RG_VIBR_EN
Type			RW		RW		RW	RW
Reset			0	0	0	0	0	0

Bit(s)	Name	Description
5:4	RG_VIBR_STBTD	00: 240us (Li-ion) / 1.6ms (coin) 01: 2.4ms (Li-ion) / 15 ms (coin) 10: 90 us (Li-ion) / 1.2 ms (coin) 11: 3 ms (Li-ion) / 17 ms (coin)
3:2	RG_OVR_VIBR_PMOD	
1	RG_VIBR_OCFB_EN	
0	RG_VIBR_EN	

326 **VIBRLDO0** **VIBRLDO0** **00**

Bit	7	6	5	4	3	2	1	0
Name					RG_VIBR_CAL			
Type					RW			
Reset					0	0	0	0

Bit(s)	Name	Description
3:0	RG_VIBR_CAL	4'b0000: 0 mV 4'b0001: -20 mV 4'b0010: -40 mV 4'b0011: -60 mV 4'b0100: -80 mV

© 2015 - 2017 MediaTek Inc.

This document contains information that is proprietary to MediaTek Inc. ("MediaTek") and/or its licensor(s).
Any unauthorized use, reproduction or disclosure of this document in whole or in part is strictly prohibited.

Bit(s)	Name	Description
		4'b0101: -100 mV 4'b0110: -120 mV 4'b0111: -140 mV 4'b1000: +160 mV 4'b1001: +140 mV 4'b1010: +120 mV 4'b1011: +100 mV 4'b1100: +80 mV 4'b1101: +60 mV 4'b1110: +40 mV 4'b1111: +20 mV

327 **VIBRLDO1** **VIBRL DO1** **05**

Bit	7	6	5	4	3	2	1	0
Name						RG_VIBR_VOSEL		
Type						RW		
Reset						1	0	1

Bit(s)	Name	Description
2:0	RG_VIBR_VOSEL	3'b000: 1.3V 3'b001: 1.5 V 3'b010: 1.8 V 3'b011: 2 V 3'b100: 2.5 V 3'b101: 2.8 V 3'b110: 3 V 3'b111: 3.3 V

32A **VIBRLDOBF0** **VIBRL DOBF0** **00**

Bit	7	6	5	4	3	2	1	0
Name					RG_VIBR_BUF_CAL			
Type					RW			
Reset					0	0	0	0

Bit(s)	Name	Description
3:0	RG_VIBR_BUF_CAL	4'b0000: 0 mV 4'b0001: -20 mV 4'b0010: -40 mV 4'b0011: -60 mV 4'b0100: -80 mV 4'b0101: -100 mV 4'b0110: -120 mV 4'b0111: -140 mV 4'b1000: +160 mV 4'b1001: +140 mV 4'b1010: +120 mV 4'b1011: +100 mV 4'b1100: +80 mV 4'b1101: +60 mV 4'b1110: +40 mV 4'b1111: +20 mV

© 2015 - 2017 MediaTek Inc.

This document contains information that is proprietary to MediaTek Inc. (“MediaTek”) and/or its licensor(s).
Any unauthorized use, reproduction or disclosure of this document in whole or in part is strictly prohibited.

32C	ISINK0_CON0	ISINK0 Control Register 0	00

Bit	7	6	5	4	3	2	1	0
Name	ISINK_DIM0_FSEL_L							
Type	RW							
Reset	0	0	0	0	0	0	0	0

Bit(s)	Name	Description
7:0	ISINK_DIM0_FSEL_L	**ISINK0 dimming frequency selection** backlight: (@ 2MHz) 2: 20k Hz 61: 1k Hz 311: 200 Hz 12499: 5 Hz 31249: 2 Hz 62499: 1Hz indicator: (@32KHz) 0: 1k Hz 4: 200 Hz 199: 5 Hz 499: 2 Hz 999: 1Hz 1999: 0.5Hz 4999: 0.2 Hz 9999: 0.1 Hz

32D	ISINK0_CON1	ISINK0 Control Register 1	00

Bit	7	6	5	4	3	2	1	0
Name	ISINK_DIM0_FSEL_H							
Type	RW							
Reset	0	0	0	0	0	0	0	0

Bit(s)	Name	Description
7:0	ISINK_DIM0_FSEL_H	**ISINK0 dimming frequency selection**

32E	ISINK0_CON2	ISINK0 Control Register 2	00

Bit	7	6	5	4	3	2	1	0
Name	ISINK_CH0_STEP			ISINK_DIM0_DUTY				
Type	RW			RW				
Reset	0	0	0	0	0	0	0	0

Bit(s)	Name	Description
7:5	ISINK_CH0_STEP	**Coarse 6 step current level for ISINK CH0** 000: 4mA 001: 8mA

This document contains information that is proprietary to MediaTek Inc. ("MediaTek") and/or its licensor(s).
Any unauthorized use, reproduction or disclosure of this document in whole or in part is strictly prohibited.

Bit(s)	Name	Description
4:0	ISINK_DIM0_DUTY	010: 12mA 011: 16mA 100: 20mA 101: 24mA 110: 24mA 111: 24mA **ISINK ON-duty of dimming0 control** N: (N+1)/32 0: 1/32 1: 2/32 2: 3/32 31: 32/32

330 **ISINK0_CON4** **ISINK0 Control Register 4** **00**

Bit	7	6	5	4	3	2	1	0
Name	ISINK_BREATH0_TR1_SEL				ISINK_BREATH0_TR2_SEL			
Type	RW				RW			
Reset	0	0	0	0	0	0	0	0

Bit(s)	Name	Description
7:4	ISINK_BREATH0_TR1_SEL	**ISINK0 breath mode rising time selection for duty 0%~30%** 0: 0.123s 1: 0.338s 2: 0.523s 3: 0.707s 4: 0.926s 5: 1.107s 6: 1.291s 7: 1.507s 8: 1.691s 9: 1.876s 10: 2.091s 11: 2.276s 12: 2.460s 13: 2.676s 14: 2.860s 15: 3.075s
3:0	ISINK_BREATH0_TR2_SEL	**ISINK0 breath mode rising time selection for duty 31%~100%** 0: 0.123s 1: 0.338s 2: 0.523s 3: 0.707s 4: 0.926s 5: 1.107s 6: 1.291s 7: 1.507s 8: 1.691s 9: 1.876s 10: 2.091s 11: 2.276s 12: 2.460s 13: 2.676s 14: 2.860s 15: 3.075s

© 2015 - 2017 MediaTek Inc.

This document contains information that is proprietary to MediaTek Inc. (“MediaTek”) and/or its licensor(s).
Any unauthorized use, reproduction or disclosure of this document in whole or in part is strictly prohibited.

331	ISINK0_CON5	ISINK0 Control Register 5	00

Bit	7	6	5	4	3	2	1	0
Name	ISINK_BREATH0_TF1_SEL				ISINK_BREATH0_TF2_SEL			
Type	RW				RW			
Reset	0	0	0	0	0	0	0	0

Bit(s)	Name	Description
7:4	ISINK_BREATH0_TF1_SEL	**ISINK0 breath mode falling time selection for duty 0%~30%** 0: 0.123s 1: 0.338s 2: 0.523s 3: 0.707s 4: 0.926s 5: 1.107s 6: 1.291s 7: 1.507s 8: 1.691s 9: 1.876s 10: 2.091s 11: 2.276s 12: 2.460s 13: 2.676s 14: 2.860s 15: 3.075s
3:0	ISINK_BREATH0_TF2_SEL	**ISINK0 breath mode falling time selection for duty 31%~100%** 0: 0.123s 1: 0.338s 2: 0.523s 3: 0.707s 4: 0.926s 5: 1.107s 6: 1.291s 7: 1.507s 8: 1.691s 9: 1.876s 10: 2.091s 11: 2.276s 12: 2.460s 13: 2.676s 14: 2.860s 15: 3.075s

332	ISINK0_CON6	ISINK0 Control Register 6	00

Bit	7	6	5	4	3	2	1	0
Name	ISINK_BREATH0_TON_SEL				ISINK_BREATH0_TOFF_SEL			
Type	RW				RW			
Reset	0	0	0	0	0	0	0	0

Bit(s)	Name	Description
7:4	ISINK_BREATH0_T	**ISINK0 breath mode Ton time selection**

This document contains information that is proprietary to MediaTek Inc. ("MediaTek") and/or its licensor(s).
Any unauthorized use, reproduction or disclosure of this document in whole or in part is strictly prohibited.

Bit(s)	Name	Description
	ON_SEL	0: 0.123s 1: 0.338s 2: 0.523s 3: 0.707s 4: 0.926s 5: 1.107s 6: 1.291s 7: 1.507s 8: 1.691s 9: 1.876s 10: 2.091s 11: 2.276s 12: 2.460s 13: 2.676s 14: 2.860s 15: 3.075s
3:0	ISINK_BREATH0_TOFF_SEL	**ISINK0 breath mode Toff time selection** 0: 0.246s 1: 0.677s 2: 1.046s 3: 1.417s 4: 1.845s 5: 2.214s 6: 2.583s 7: 3.014s 8: 3.383s 9: 3.752s 10: 4.183s 11: 4.552s 12: 4.921s 13: 5.351s 14: 5.720s 15: 6.151s

333	**ISINK1_CON0**	**ISINK1 Control Register 0**	**00**

Bit	7	6	5	4	3	2	1	0
Name	ISINK_DIM1_FSEL_L							
Type	RW							
Reset	0	0	0	0	0	0	0	0

Bit(s)	Name	Description
7:0	ISINK_DIM1_FSEL_L	**ISINK1 dimming frequency selection** backlight: (@ 2MHz) 2: 20k Hz 61: 1k Hz 311: 200 Hz 12499: 5 Hz 31249: 2 Hz 62499: 1Hz indicator: (@32KHz) 0: 1k Hz 4: 200 Hz 199: 5 Hz 499: 2 Hz 999: 1Hz 1999: 0.5Hz

© 2015 - 2017 MediaTek Inc.

This document contains information that is proprietary to MediaTek Inc. ("MediaTek") and/or its licensor(s).
Any unauthorized use, reproduction or disclosure of this document in whole or in part is strictly prohibited.

Bit(s)	Name	Description
		4999: 0.2 Hz 9999: 0.1 Hz

334 **ISINK1_CON1** **ISINK1 Control Register 1** **00**

Bit	7	6	5	4	3	2	1	0
Name	ISINK_DIM1_FSEL_H							
Type	RW							
Reset	0	0	0	0	0	0	0	0

Bit(s)	Name	Description
7:0	ISINK_DIM1_FSEL_H	

335 **ISINK1_CON2** **ISINK1 Control Register 2** **00**

Bit	7	6	5	4	3	2	1	0
Name	ISINK_CH1_STEP			ISINK_DIM1_DUTY				
Type	RW			RW				
Reset	0	0	0	0	0	0	0	0

Bit(s)	Name	Description
7:5	ISINK_CH1_STEP	**Coarse 6 step current level for ISINK CH1** 000: 4mA 001: 8mA 010: 12mA 011: 16mA 100: 20mA 101: 24mA 110: 24mA 111: 24mA
4:0	ISINK_DIM1_DUTY	**ISINK ON-duty of dimming1 control** N: (N+1)/32 0: 1/32 1: 2/32 2: 3/32 31: 32/32

337 **ISINK1_CON4** **ISINK1 Control Register 4** **00**

Bit	7	6	5	4	3	2	1	0
Name	ISINK_BREATH1_TR1_SEL				ISINK_BREATH1_TR2_SEL			
Type	RW				RW			
Reset	0	0	0	0	0	0	0	0

© 2015 - 2017 MediaTek Inc.

This document contains information that is proprietary to MediaTek Inc. (“MediaTek”) and/or its licensor(s).
Any unauthorized use, reproduction or disclosure of this document in whole or in part is strictly prohibited.

Bit(s)	Name	Description
7:4	ISINK_BREATH1_TR1_SEL	**ISINK1 breath mode rising time selection for duty 0%~30%** 0: 0.123s 1: 0.338s 2: 0.523s 3: 0.707s 4: 0.926s 5: 1.107s 6: 1.291s 7: 1.507s 8: 1.691s 9: 1.876s 10: 2.091s 11: 2.276s 12: 2.460s 13: 2.676s 14: 2.860s 15: 3.075s
3:0	ISINK_BREATH1_TR2_SEL	**ISINK1 breath mode rising time selection for duty 31%~100%** 0: 0.123s 1: 0.338s 2: 0.523s 3: 0.707s 4: 0.926s 5: 1.107s 6: 1.291s 7: 1.507s 8: 1.691s 9: 1.876s 10: 2.091s 11: 2.276s 12: 2.460s 13: 2.676s 14: 2.860s 15: 3.075s

338 **ISINK1_CON5** **ISINK1 Control Register 5** **00**

Bit	7	6	5	4	3	2	1	0
Name	ISINK_BREATH1_TF1_SEL				ISINK_BREATH1_TF2_SEL			
Type	RW				RW			
Reset	0	0	0	0	0	0	0	0

Bit(s)	Name	Description
7:4	ISINK_BREATH1_TF1_SEL	**ISINK1 breath mode falling time selection for duty 0% ~ 30%** 0: 0.123s 1: 0.338s 2: 0.523s 3: 0.707s 4: 0.926s 5: 1.107s 6: 1.291s 7: 1.507s 8: 1.691s 9: 1.876s 10: 2.091s 11: 2.276s 12: 2.460s

© 2015 - 2017 MediaTek Inc.

This document contains information that is proprietary to MediaTek Inc. ("MediaTek") and/or its licensor(s).
Any unauthorized use, reproduction or disclosure of this document in whole or in part is strictly prohibited.

Bit(s)	Name	Description
		13: 2.676s 14: 2.860s 15: 3.075s
		ISINK1 breath mode falling time selection for duty31% ~ 100%
3:0	ISINK_BREATH1_TF2_SEL	0: 0.123s 1: 0.338s 2: 0.523s 3: 0.707s 4: 0.926s 5: 1.107s 6: 1.291s 7: 1.507s 8: 1.691s 9: 1.876s 10: 2.091s 11: 2.276s 12: 2.460s 13: 2.676s 14: 2.860s 15: 3.075s

339 **ISINK1_CON6** **ISINK1 Control Register 6** **00**

Bit	7	6	5	4	3	2	1	0
Name	ISINK_BREATH1_TON_SEL				ISINK_BREATH1_TOFF_SEL			
Type	RW				RW			
Reset	0	0	0	0	0	0	0	0

Bit(s)	Name	Description
		ISINK1 breath mode Ton time selection
7:4	ISINK_BREATH1_TON_SEL	0: 0.123s 1: 0.338s 2: 0.523s 3: 0.707s 4: 0.926s 5: 1.107s 6: 1.291s 7: 1.507s 8: 1.691s 9: 1.876s 10: 2.091s 11: 2.276s 12: 2.460s 13: 2.676s 14: 2.860s 15: 3.075s
		ISINK1 breath mode Toff time selection
3:0	ISINK_BREATH1_TOFF_SEL	0: 0.246s 1: 0.677s 2: 1.046s 3: 1.417s 4: 1.845s 5: 2.214s 6: 2.583s 7: 3.014s 8: 3.383s 9: 3.752s

© 2015 - 2017 MediaTek Inc.

This document contains information that is proprietary to MediaTek Inc. (“MediaTek”) and/or its licensor(s).
Any unauthorized use, reproduction or disclosure of this document in whole or in part is strictly prohibited.

Bit(s)	Name	Description
		10: 4.183s 11: 4.552s 12: 4.921s 13: 5.351s 14: 5.720s 15: 6.151s

33A **ISINK2_CON1** **ISINK2 Control Register 1** **00**

Bit	7	6	5	4	3	2	1	0
Name	ISINK_CH2_STEP							
Type	RW							
Reset	0	0	0					

Bit(s)	Name	Description
		Coarse 6 step current level for ISINK CH2
7:5	ISINK_CH2_STEP	000: 4mA 001: 8mA 010: 12mA 011: 16mA 100: 20mA 101: 24mA 110: 24mA 111: 24mA

33C **ISINK3_CON1** **ISINK3 Control Register 1** **00**

Bit	7	6	5	4	3	2	1	0
Name	ISINK_CH3_STEP							
Type	RW							
Reset	0	0	0					

Bit(s)	Name	Description
		Coarse 6 step current level for ISINK CH3
7:5	ISINK_CH3_STEP	000: 4mA 001: 8mA 010: 12mA 011: 16mA 100: 20mA 101: 24mA 110: 24mA 111: 24mA

© 2015 - 2017 MediaTek Inc.

This document contains information that is proprietary to MediaTek Inc. ("MediaTek") and/or its licensor(s).
Any unauthorized use, reproduction or disclosure of this document in whole or in part is strictly prohibited.

33F	ISINK_ANA0_H	ISINKSACD Interface 0 High	00

Bit	7	6	5	4	3	2	1	0
Name							RG_ISINK1_DOUBLE	RG_ISINK0_DOUBLE
Type							RW	RW
Reset							0	0

Bit(s)	Name	Description
1	RG_ISINK1_DOUBLE	**isink surrent doubel** 1'b1: enable 1'b0: disable
0	RG_ISINK0_DOUBLE	**isink surrent doubel** 1'b1: enable 1'b0: disable

344	ISINK_EN_CTRL_Low	ISINK Enable control Low	F0

Bit	7	6	5	4	3	2	1	0
Name			RG_ISINK1_CHOP_EN	RG_ISINK0_CHOP_EN			ISINK_CH1_EN	ISINK_CH0_EN
Type			RW	RW			RW	RW
Reset			1	1			0	0

Bit(s)	Name	Description
5	RG_ISINK1_CHOP_EN	**ISINK Channel 1 CHOP CLK enable** 1'b0: Disable 1'b1: Enable
4	RG_ISINK0_CHOP_EN	**ISINK Channel 0 CHOP CLK enable** 1'b0: Disable 1'b1: Enable
1	ISINK_CH1_EN	**Turn on ISINK Channel 1** 1'b0: Disable 1'b1: Enable
0	ISINK_CH0_EN	**Turn on ISINK Channel 0** 1'b0: Disable 1'b1: Enable

345	ISINK_EN_CTRL_High	ISINK Enable control High	00

Bit	7	6	5	4	3	2	1	0
Name							ISINK_CH1_BIAS_EN	ISINK_CH0_BIAS_EN

© 2015 - 2017 MediaTek Inc.

This document contains information that is proprietary to MediaTek Inc. (“MediaTek”) and/or its licensor(s).
Any unauthorized use, reproduction or disclosure of this document in whole or in part is strictly prohibited.

345 **ISINK_EN_CTRL_High** **ISINK Enable control High** **00**

Type							RW	RW
Reset							0	0

Bit(s)	Name	Description
1	ISINK_CH1_BIAS_EN	**ISINK Channel 1 CHOP CLK enable** 1'b0: Disable 1'b1: Enable
0	ISINK_CH0_BIAS_EN	**ISINK Channel 0 CHOP CLK enable** 1'b0: Disable 1'b1: Enable

346 **ISINK_MODE_CTRL** **ISINK mode control** **08**

Bit	7	6	5	4	3	2	1	0
Name	**ISINK_CH0_MODE**		**ISINK_CH1_MODE**					
Type	RW		RW					
Reset	0	0	0	0				

Bit(s)	Name	Description
7:6	ISINK_CH0_MODE	**ISINK Channel 0 enable mode select** 2'b00: PWM mode 2'b01: Breath mode 2'b10: register mode 2'b11: register mode
5:4	ISINK_CH1_MODE	**ISINK Channel 1 enable mode select** 2'b00: PWM mode 2'b01: Breath mode 2'b10: register mode 2'b11: register mode

© 2015 - 2017 MediaTek Inc.

This document contains information that is proprietary to MediaTek Inc. ("MediaTek") and/or its licensor(s).
Any unauthorized use, reproduction or disclosure of this document in whole or in part is strictly prohibited.