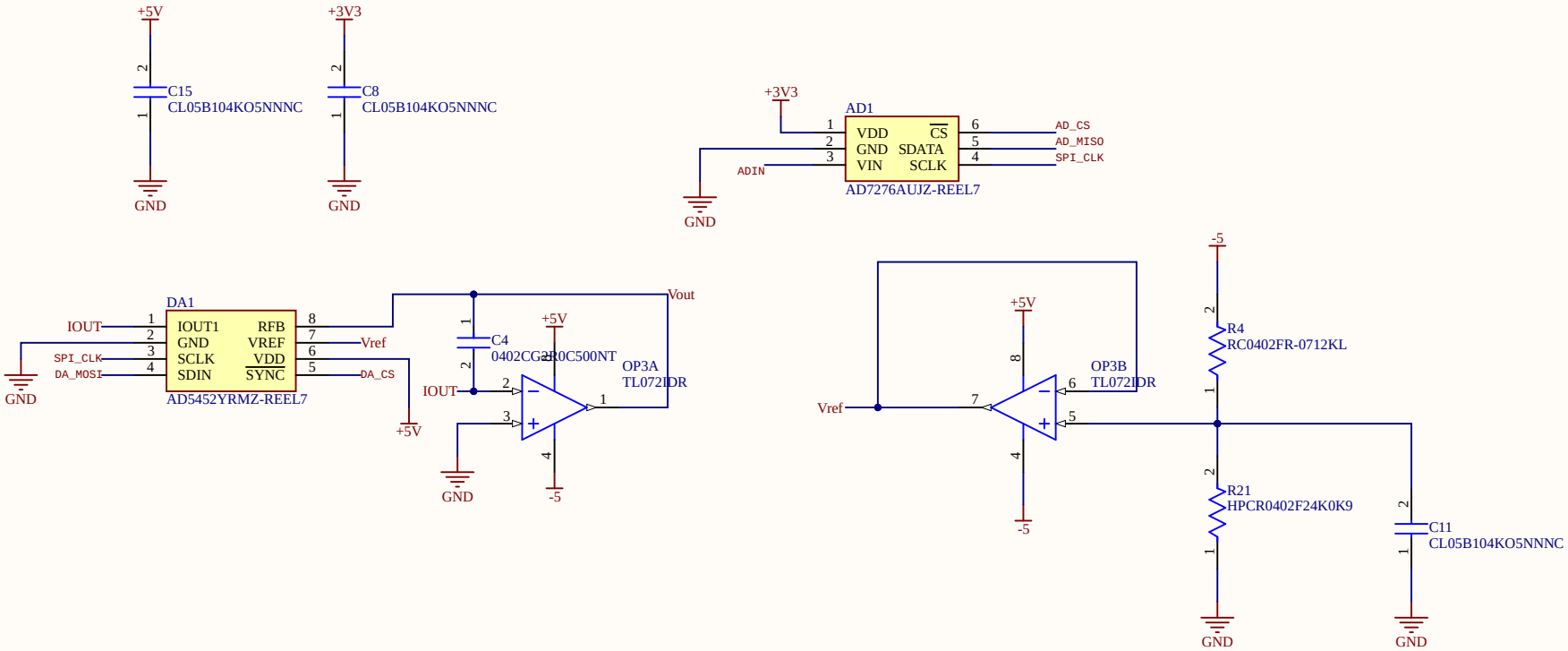

Title	ADC & DAC	
Size A4	Number	Revision 1
Date: 5/30/2025		Sheet of
File: E:\Intern\..\DAC_ADC.SchDoc		Drawn By:

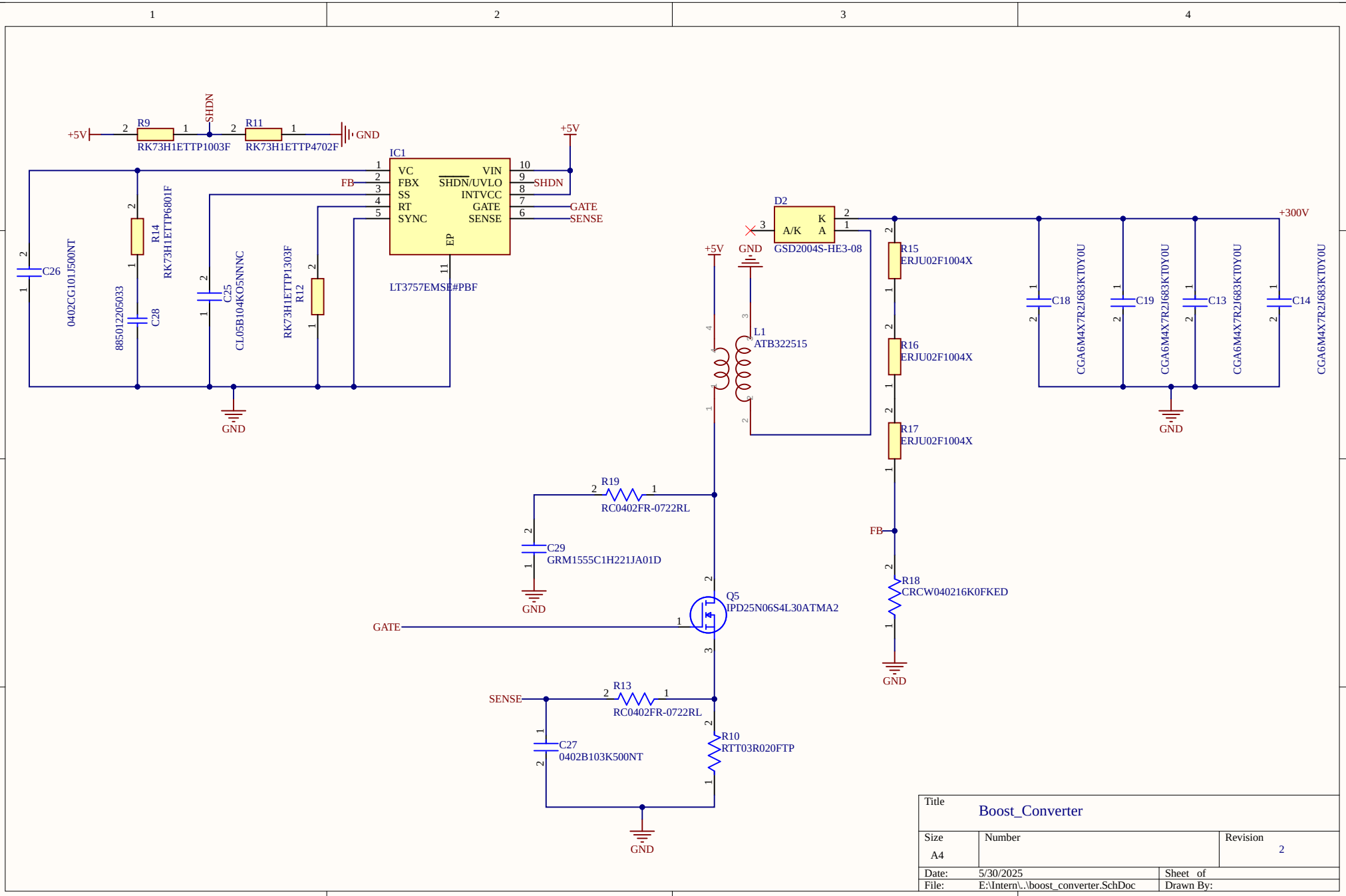

Title	Boost_Converter	
Size A4	Number	Revision 2
Date: 5/30/2025		Sheet of
File: E:\Intern\..\boost_converter.SchDoc		Drawn By:

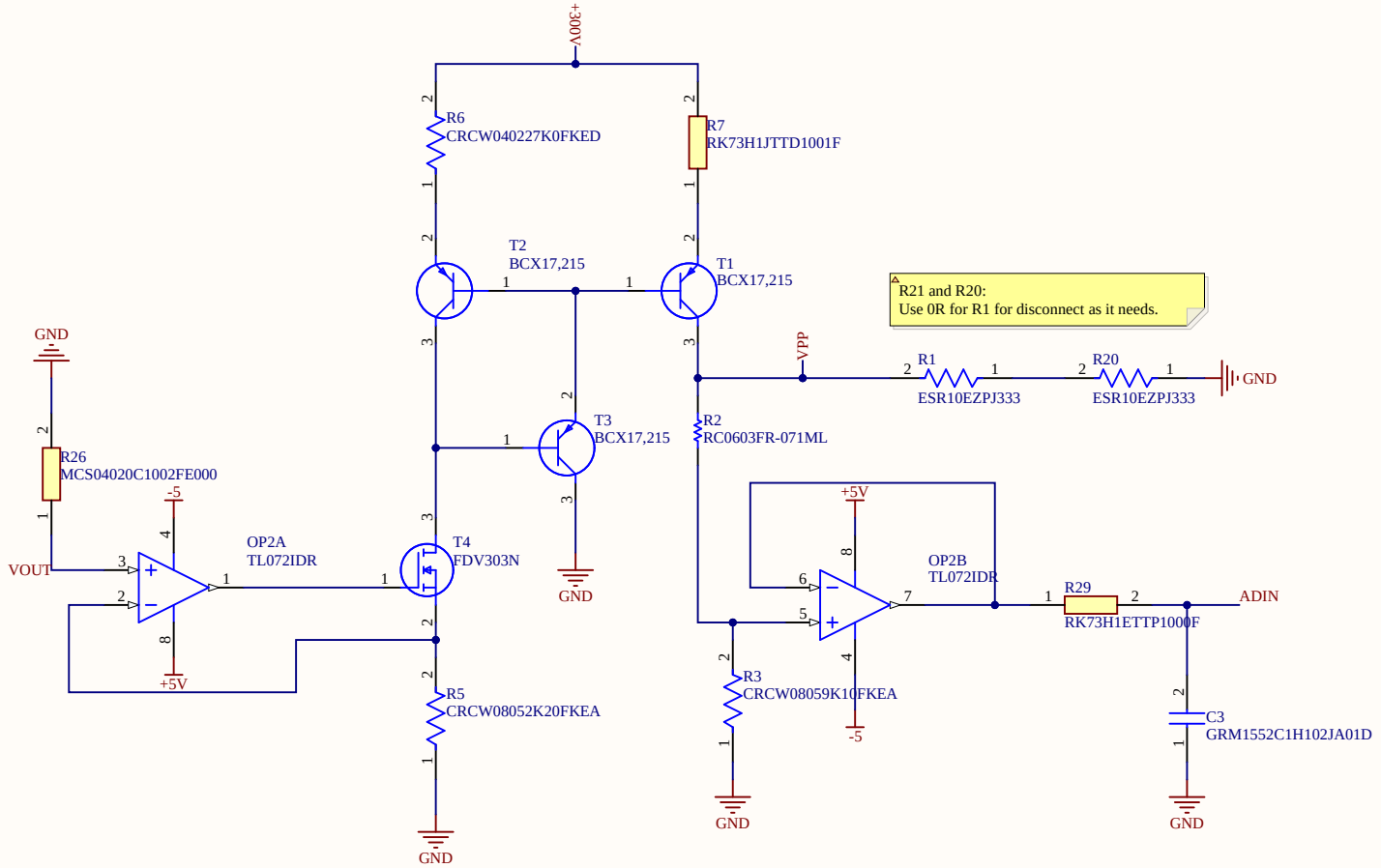

Title	Current Mirror	
Size A4	Number	Revision 1
Date: 5/30/2025		Sheet of
File: E:\Intern\..\current_mirror.SchDoc		Drawn By:

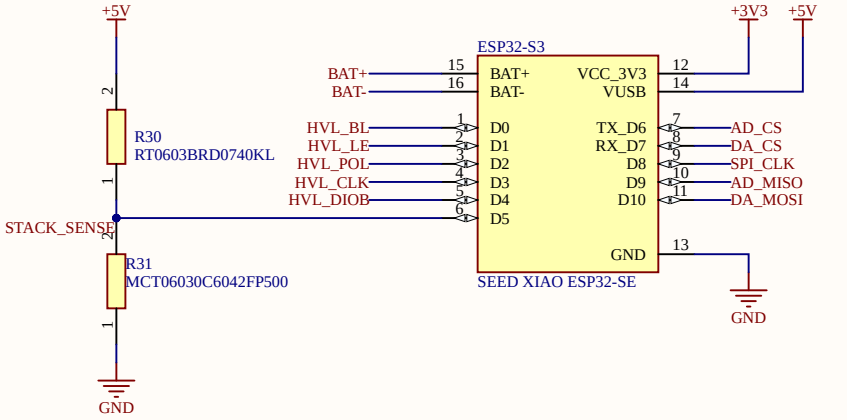

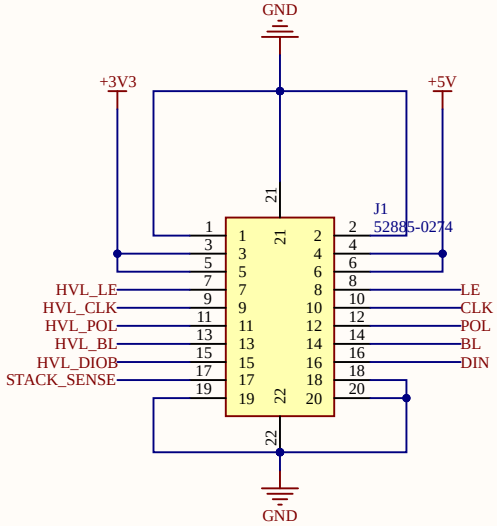

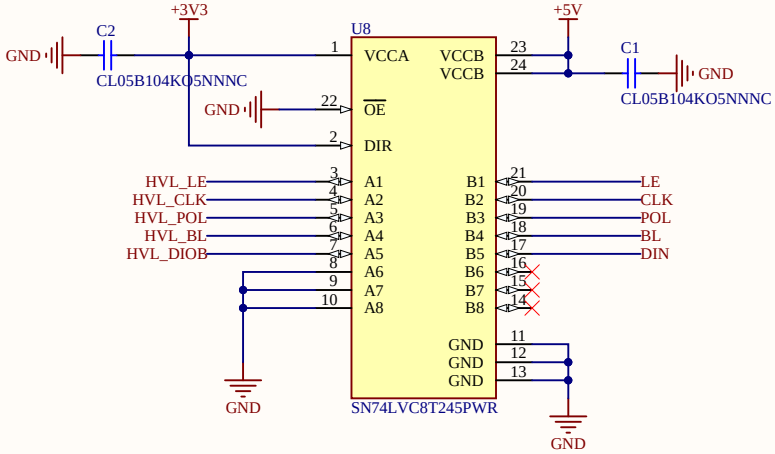

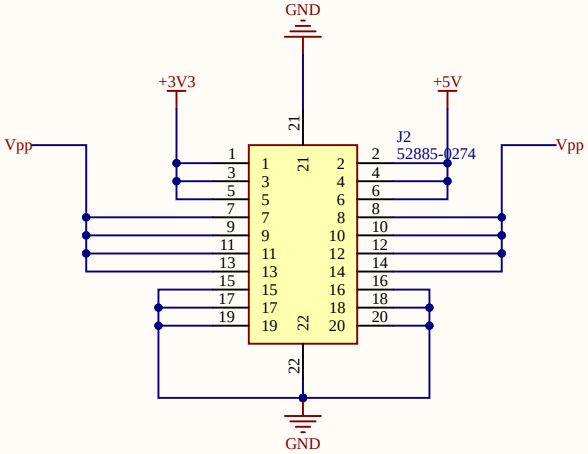

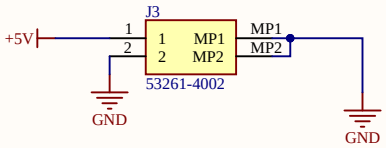

Title	Processor & Level Shifter	
Size A4	Number	Revision 1
Date: 5/30/2025		Sheet of
File: E:\Intern\..\processor.SchDoc		Drawn By:

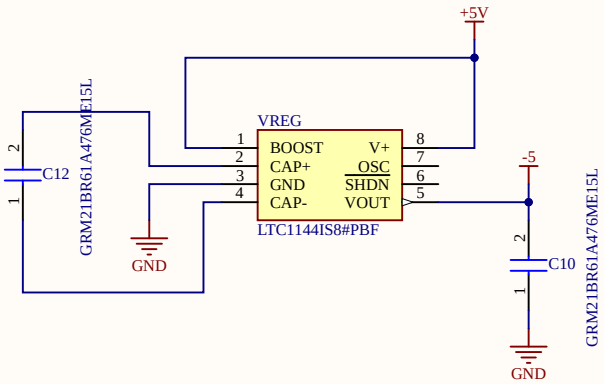

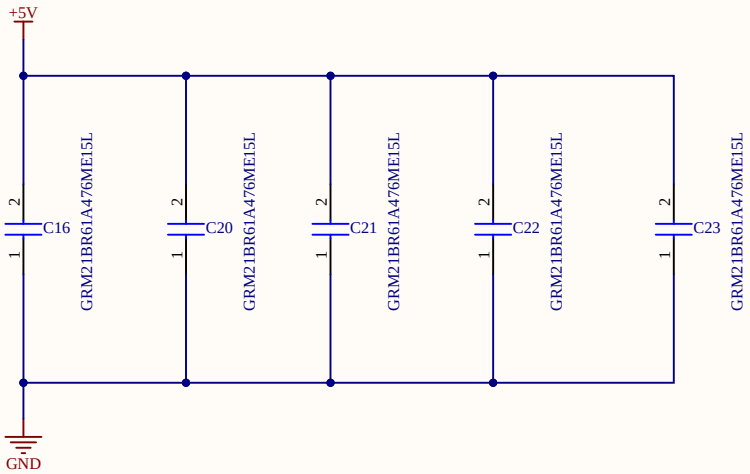

Title: Voltage Regulator		
Size: A4	Number	Revision: 1
Date: 5/30/2025		Sheet of
File: E:\Intern\..\vreg.SchDoc		Drawn By:

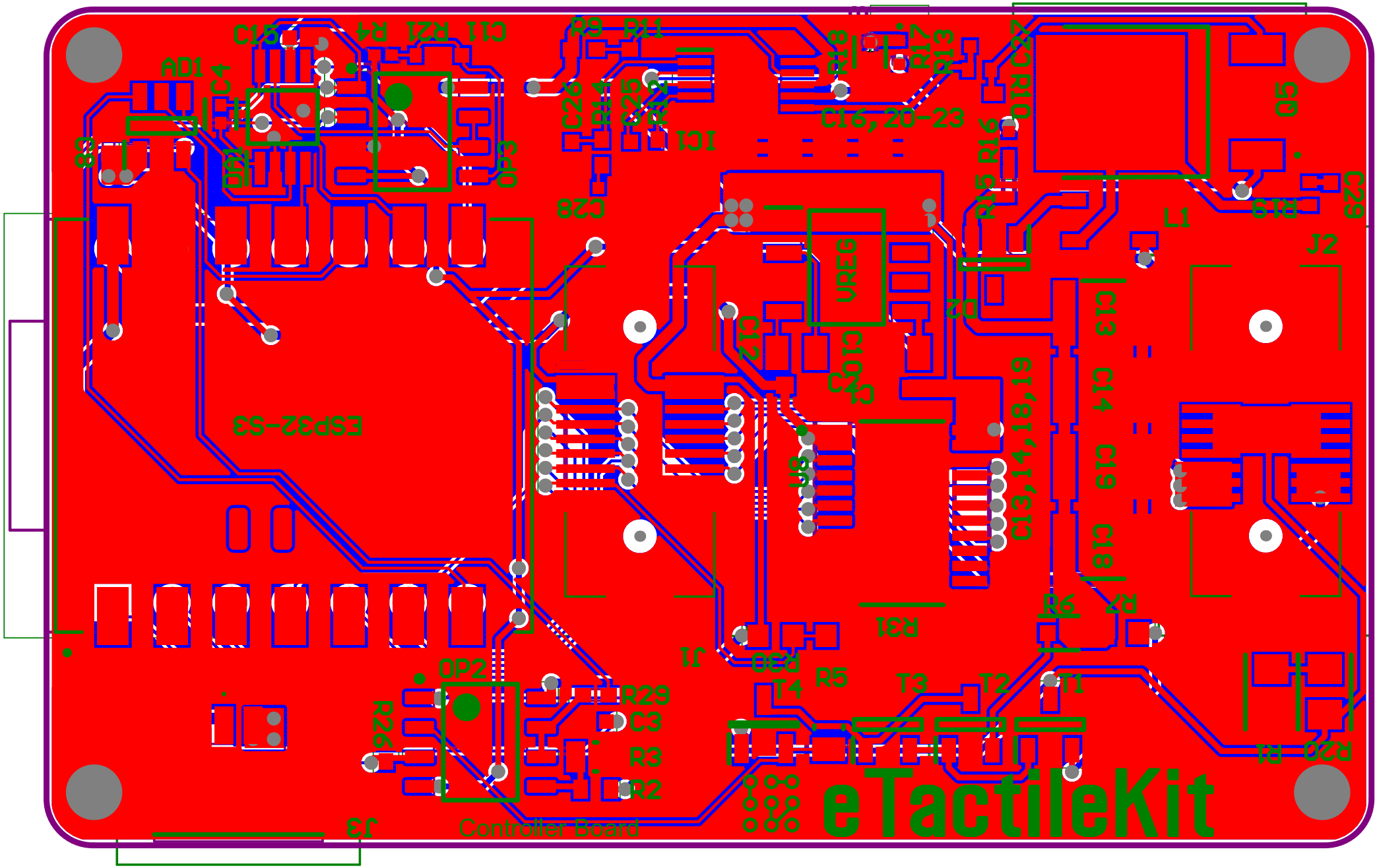
ESP32-S3
eTactileKit
Controller Board
VREG
C16,20-23
C13,14,18,19
J1
J2
J3
Q5
L1
R31
R5
T4
T3
T2
T1
R6
R7
R29
C3
R3
R2
OP2
R26
R20
R21
R19
C29
R15
R16
C28
C26
R14
R25
R24
IC1
C15
AD1
C4
C5
C8
C9
C11
R21
R4
R9
R11
R8
R13
R12
C7
C12
C10
C13
C14
C19
C18

Comment	Description	Designator	Footprint	LibRef	Quantity
AD7276AUJZ-REEL7	Integrated Circuit	AD1	SOT95P280X100-6N	AD7276AUJZ-REEL7	1
CL05B104KO5NNNC	Chip Capacitor, 100 nF, +/- 10%, 16 V, -55 to 125 degC, 0402 (1005 Metric), RoHS, Tape and Reel	C1, C2	CAPC1050X55X23ML05T13	CMP-2000-05439-1	2
GRM1552C1H102JA01D	Capacitor	C3	CAPC1005X70N	GRM1552C1H102JA01D	1
0402CG2R0C500NT	Multi-Layer Ceramic Capacitor 2pF C0G ±0.1pF 0402 Paper T/R	C4	FP-GJM155-0_05-IPC_C	CMP-2008-03830-2	1
CL05B104KO5NNNC	Capacitor	C8, C11, C15, C25	CAPC1005X55N	CL05B104KO5NNNC	4
GRM21BR61A476ME15L	Capacitor	C10, C12, C16, C20, C21, C22, C23	CAPC2012X145N	GRM21BR61A476ME15L	7
CGA6M4X7R2J683KT0Y0U	Multilayer Ceramic Capacitors 68nF ±10% 630V X7R SMD 1210	C13, C14, C18, C19	FP-C3225-200-0_4-IPC_B	CMP-08246-003489-1	4
0402CG101J500NT	Capacitor	C26	CAPC1005X55N	0402CG101J500NT	1
0402B103K500NT	CAP CER 10000PF 50V X7R 0402	C27	FP-C0402-BB-MFG	CMP-2008-02109-2	1
885012205033	885012205033 Ceramic Capacitor 22nF, 16vDC, 0402, ±10%	C28	WCAP-CSGP_0402_L1W0.5H0.5	CMP-03913-53703171-1	1
GRM1555C1H221JA01D	Capacitor	C29	CAPC1005X70N	GRM1555C1H221JA01D	1
GSD2004S-HE3-08	Diode	D2	SOT95P248X115-3N	GSD2004S-HE3-08	1
AD5452YRMZ-REEL7	Integrated Circuit	DA1	SOP65P490X110-8N	AD5452YRMZ-REEL7	1
SEED XIAO ESP32-SE		ESP32-S3	PCBComponent_1	Component_1	1
LT3757EMSE#PBF	Integrated Circuit	IC1	SOP50P490X110-11N	LT3757EMSE#PBF	1
52885-0274	Connector	J1, J2	528850274	52885-0274	2
53261-4002	Connector	J3	532614002	53261-4002	1
ATB322515		L1	ATB322515	ATB322515	1
TL072IDR	Dual Low-Noise JFET-Input General-Purpose Operational Amplifier, 7 to 36 V, -40 to 85 degC, 8-pin SOIC (D8), Green (RoHS & no Sb/Br)	OP2, OP3	D0008A_L	CMP-0015-00084-2	2
IPD25N06S4L30ATMA2	MOSFET (N-Channel)	Q5	IPD25N06S4L30ATMA2	IPD25N06S4L30ATMA2	1
ESR10EZPJ333	33kΩ ±5% 0.4W 0805 Anti-Surge Chip Resistor AEC-Q200	R1, R20	FP-ESR10-IPC_A	CMP-08839-028569-1	2
RC0603FR-071ML	Chip Resistor, 1 MOhm, +/- 1%, 100 mW, -55 to 155 degC, 0603 (1608 Metric), RoHS, Tape and Reel	R2	RESC1608X55X25L10T15	CMP-1659-00056-1	1
CRCW08059K10FKEA	RES Thick Film, 9.1kΩ, 1%, 0.125W, 100ppm/°C, 0805	R3	FP-CRCW0805-e3-IPC_C	CMP-2001-04176-2	1
RC0402FR-0712KL	RES SMD 12K OHM 1% 1/16W 0402	R4	FP-RC0402-0_4-IPC_C	CMP-2002-07378-2	1
CRCW08052K20FKEA	RES Thick Film, 2.2kΩ, 1%, 0.125W, 100ppm/°C, 0805	R5	FP-CRCW0805-e3-IPC_B	CMP-2001-03760-2	1
CRCW040227K0FKED	RES Thick Film, 27kΩ, 1%, 0.063W, 100ppm/°C, 0402	R6	FP-CRCW0402-e3-IPC_A	CMP-2002-08431-2	1
RK73H1JTTD1001F	Resistor	R7	RESC1608X55N	RK73H1JTTD1001F	1
RK73H1ETTP1003F	Resistor	R9	RESC1005X40N	RK73H1ETTP1003F	1
RTT03R020FTP	METAL CURRENT SENSOR 0402 1% 150	R10	FP-PA0402-MFG	CMP-03412-023933-1	1
RK73H1ETTP4702F	Resistor	R11	RESC1005X40N	RK73H1ETTP4702F	1
RK73H1ETTP1303F	Resistor	R12	RESC1005X40N	RK73H1ETTP1303F	1
RC0402FR-0722RL		R13, R19	FP-RC0402-0_4-MFG	CMP-2002-07520-2	2
RK73H1ETTP6801F	Resistor	R14	RESC1005X40N	RK73H1ETTP6801F	1
ERJU02F1004X	Resistor	R15, R16, R17	ERJ02_U02_(0402)	ERJU02F1004X	3
CRCW040216K0FKED	RES Thick Film, 16kΩ, 1%, 0.063W, 100ppm/°C, 0402	R18	FP-CRCW0402-e3-IPC_C	CMP-1011-00644-3	1
HPCR0402F24K0K9	RES SMD 12K OHM 1% 1/16W 0402	R21	FP-RT0402-MFG	CMP-03412-008661-1	1
MCS04020C1002FE000	Resistor	R26	RESC1005X37N	MCS04020C1002FE000	1
RK73H1ETTP1000F	Resistor	R29	RESC1005X40N	RK73H1ETTP1000F	1
RT0603BRD0740KL	Resistor	R30	RESC1608X55N	RT0603BRD0740KL	1
MCT06030C6042FP500	Resistor	R31	RESC1608X55N	MCT06030C6042FP500	1
BCX17,215	Transistor BJT PNP	T1, T2, T3	SOT95P230X110-3N	BCX17,215	3
FDV303N	MOSFET (N-Channel)	T4	SOT96P237X111-3N	FDV303N	1
SN74LVC8T245PWR	IC TRNSLTR BIDIRECTIONAL 24TSSOP	U8	FP-PW0024A-MFG	CMP-04899-000027-1	1
LTC1144IS8#PBF	Integrated Circuit	VREG	SOIC127P599X175-8N	LTC1144IS8#PBF	1