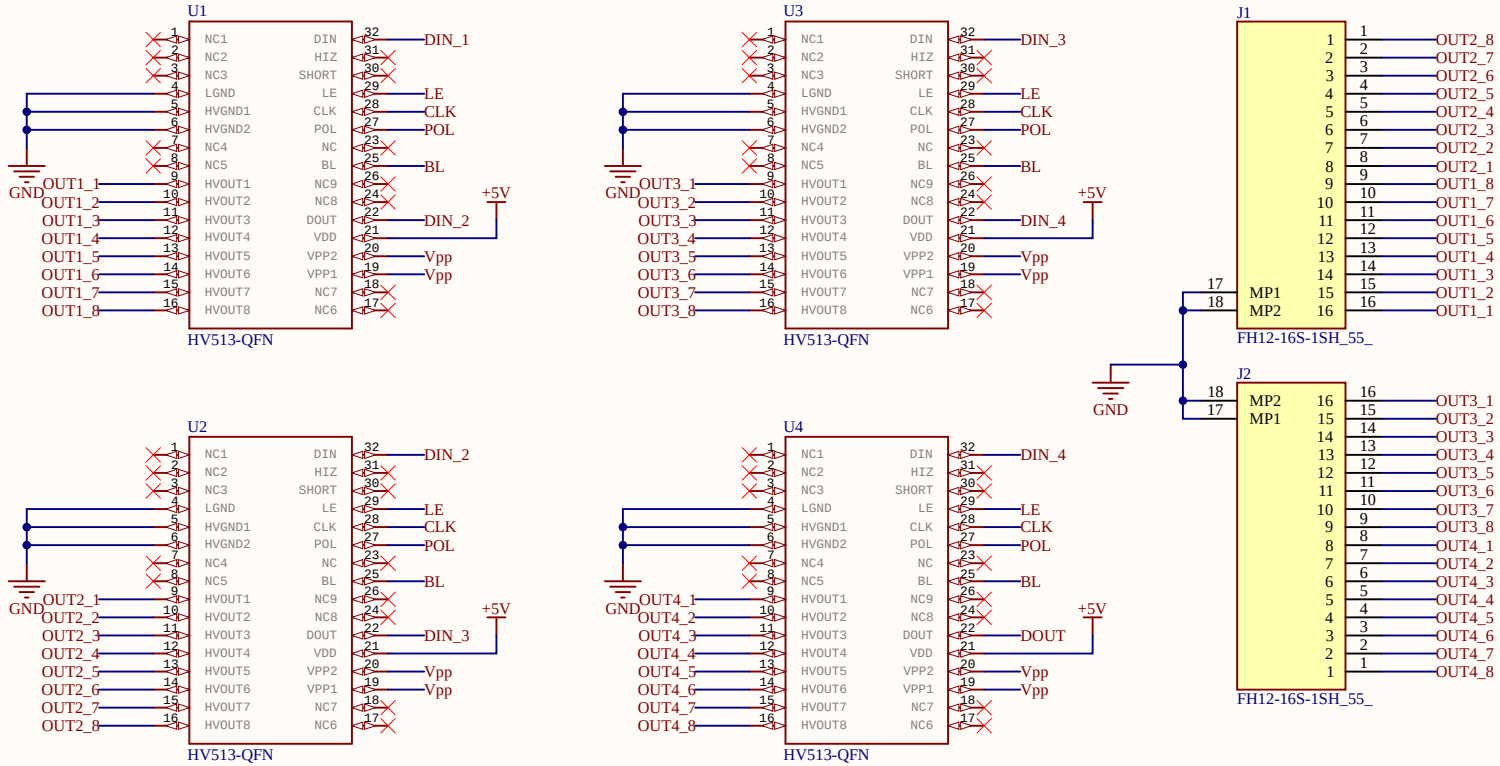

Title	Switching Circuit	
Size A4	Number	Revision 1
Date: 5/30/2025		Sheet of
File: E:\Intern\..\Switching_circuit.SchDoc		Drawn By:

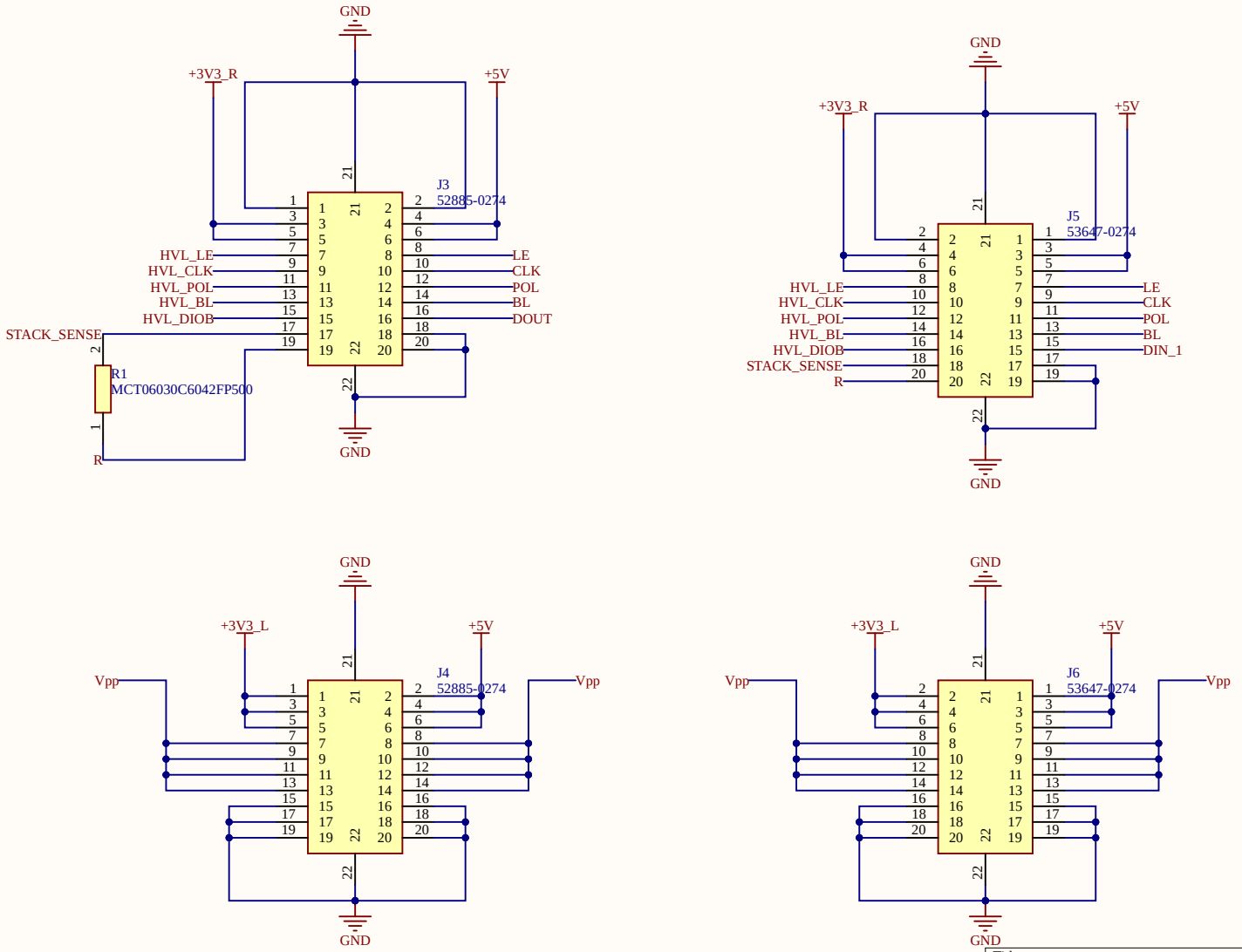

Title	Board-to-board stackup connectors	
Size A4	Number	Revision 1
Date: 5/30/2025		Sheet of
File: E:\Intern\..\connectors.SchDoc		Drawn By:

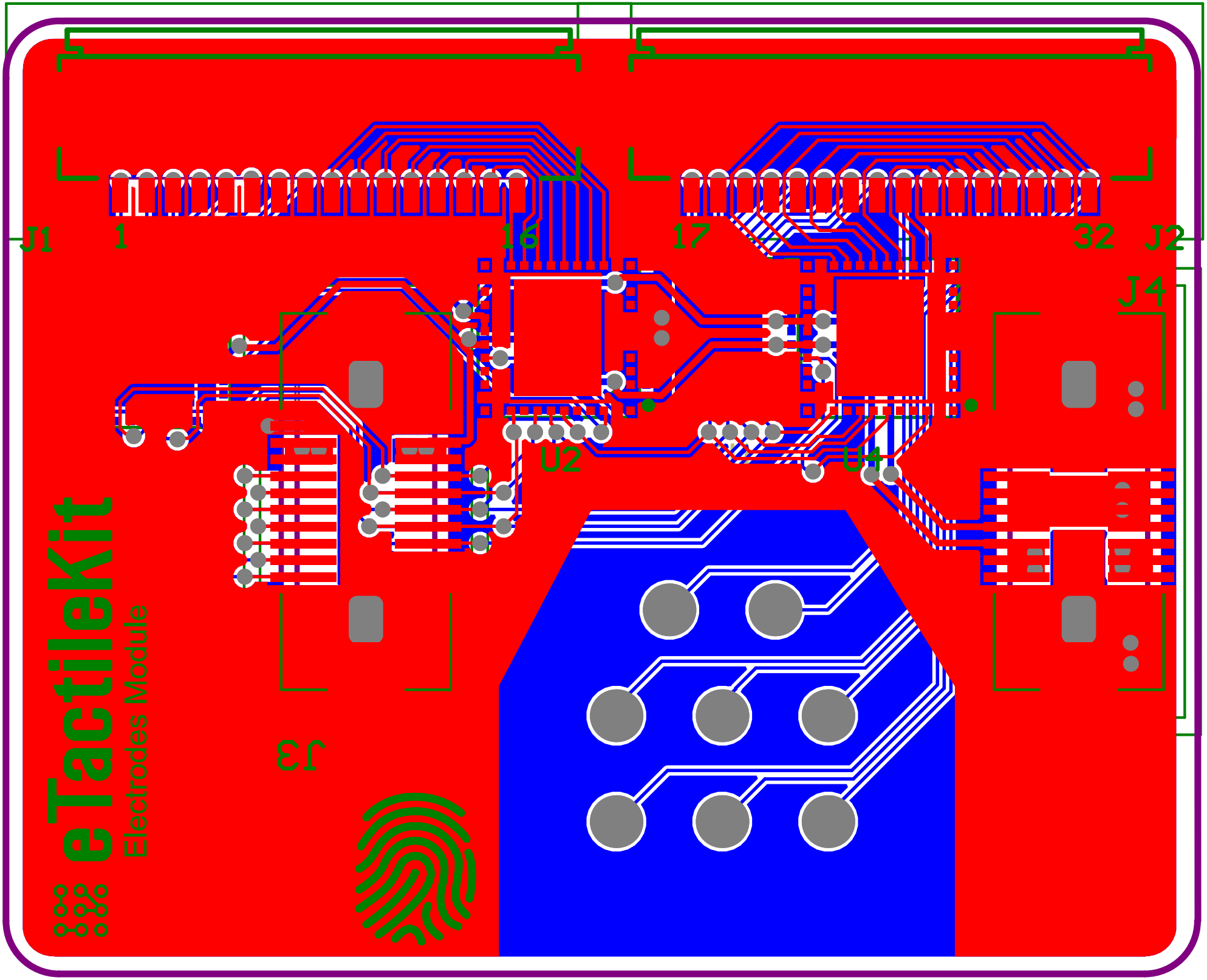
J1
1
16
17
32
J2
J4
U2
U4
J3
eTactileKit
Electrodes Module

Comment	Description	Designator	Footprint	LibRef	Quantity
FH12-16S-1SH_55_	Connector	J1, J2	FH1216S1SH55	FH12-16S-1SH_55_	2
52885-0274	Connector	J3, J4	528850274	52885-0274	2
53647-0274	Connector	J5, J6	536470274	53647-0274	2
MCT06030C6042FP500	Resistor	R1	RESC1608X55N	MCT06030C6042FP500	1
HV513-QFN		U1, U2, U3, U4	PCBComponent_1	Component_1	4