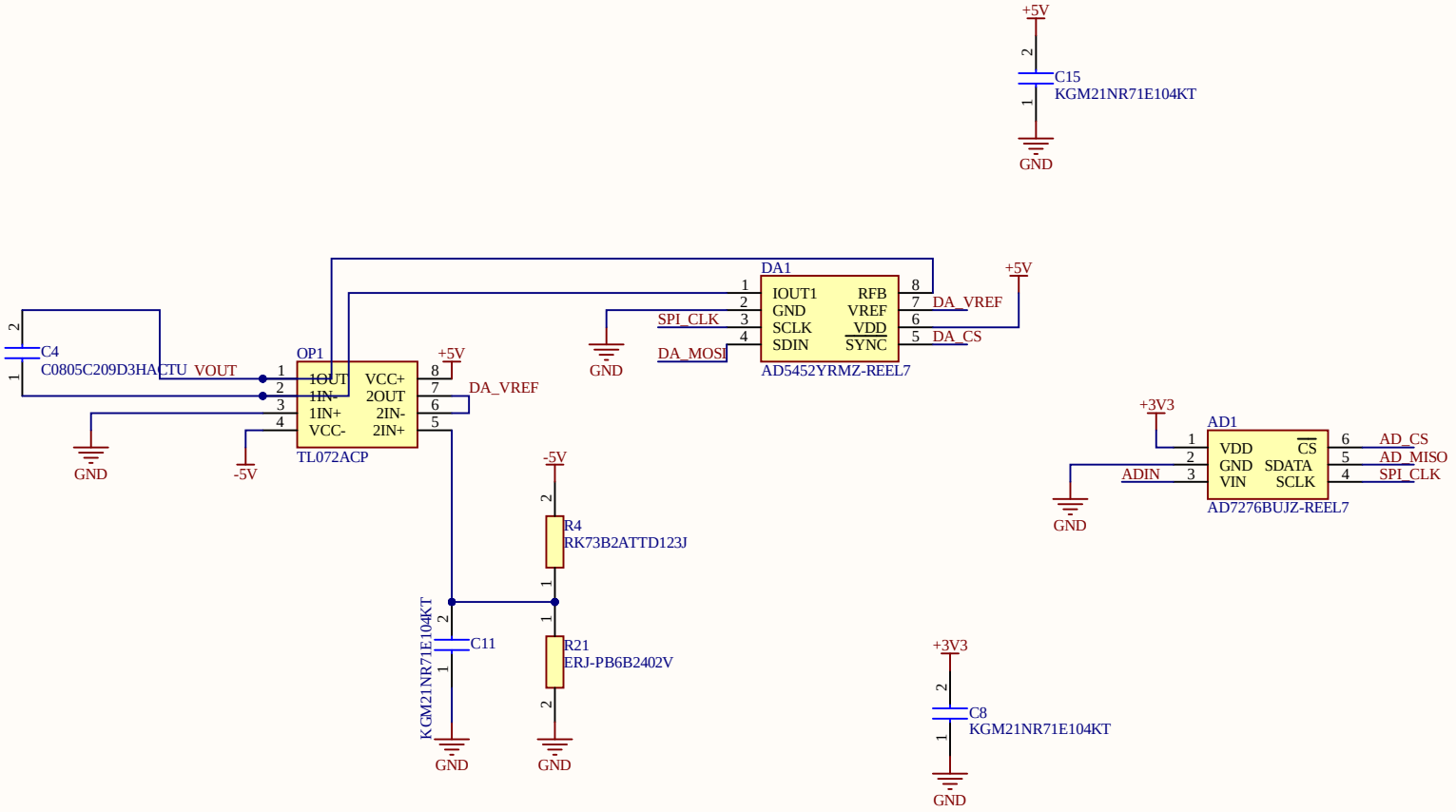

Title		
ADC & DAC		
Size: A4	Number	Revision
Date: 2/11/2025		Sheet of
File: E:\UOM\..\Sheet1.SchDoc		Drawn By:

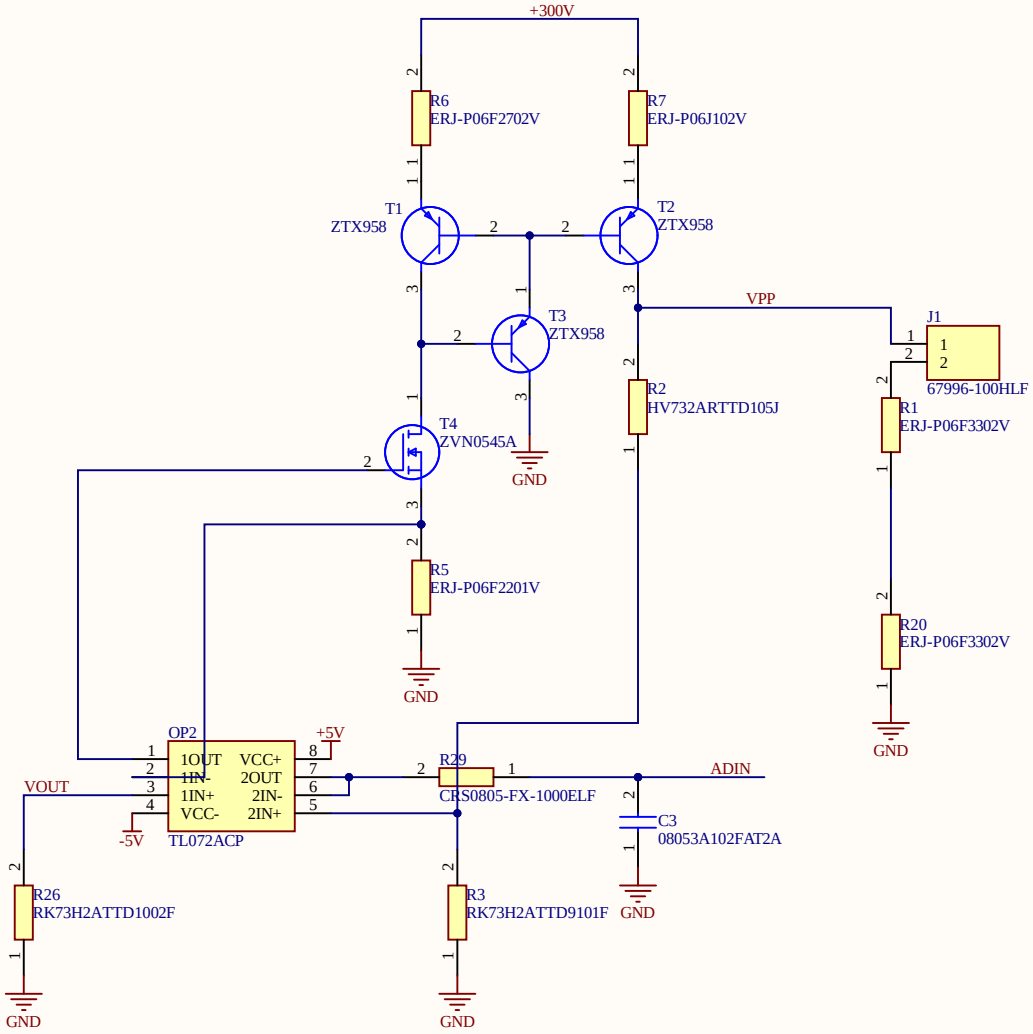

Title	Current Mirror	
Size A4	Number	Revision
Date: 2/11/2025		Sheet of
File: E:\UOM\..\Sheet2.SchDoc		Drawn By:

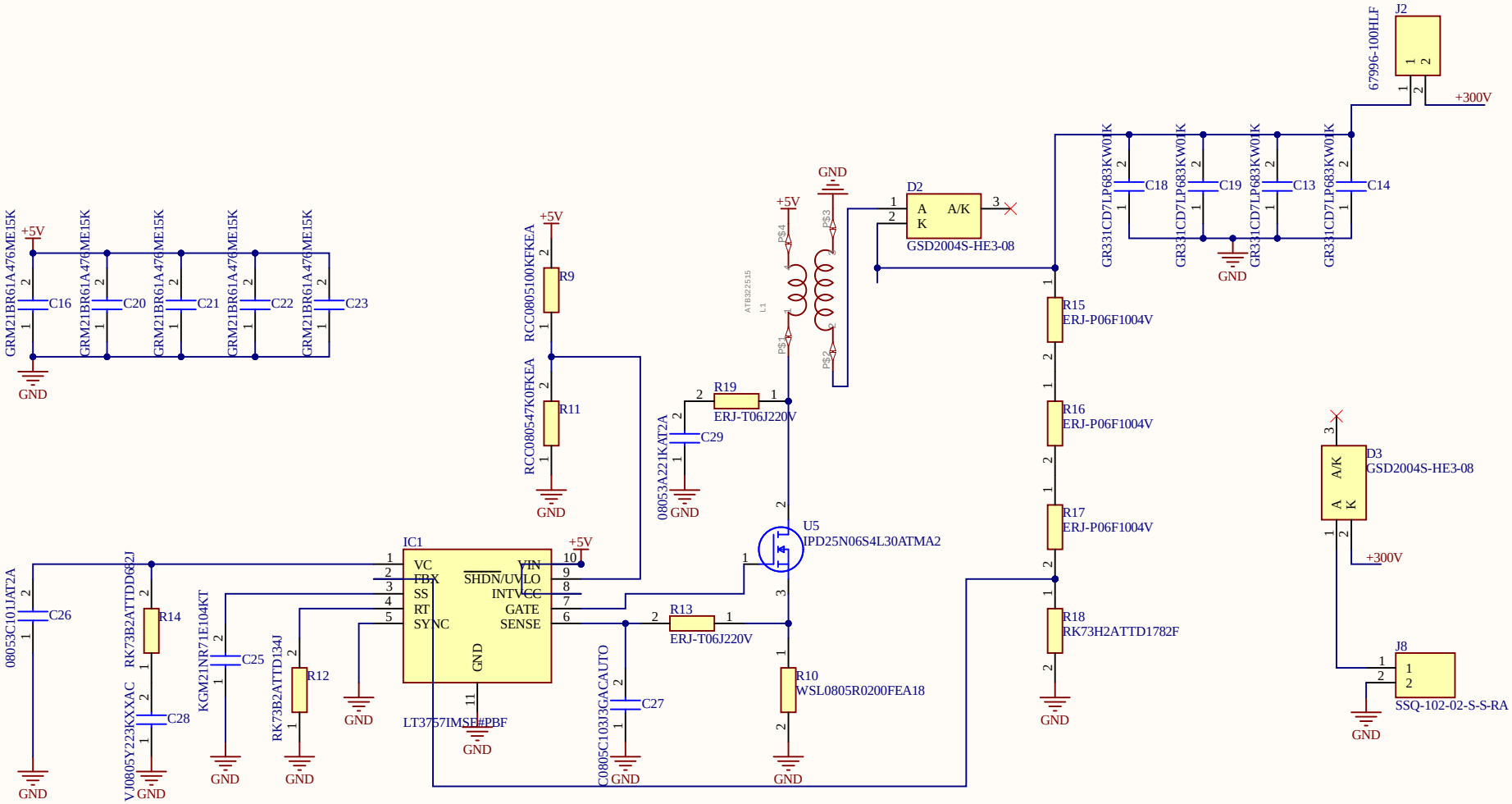

Title		
HV_Generation		
Size A4	Number	Revision
Date: 2/11/2025		Sheet of
File: E:\UOM\..\Sheet3.SchDoc		Drawn By:

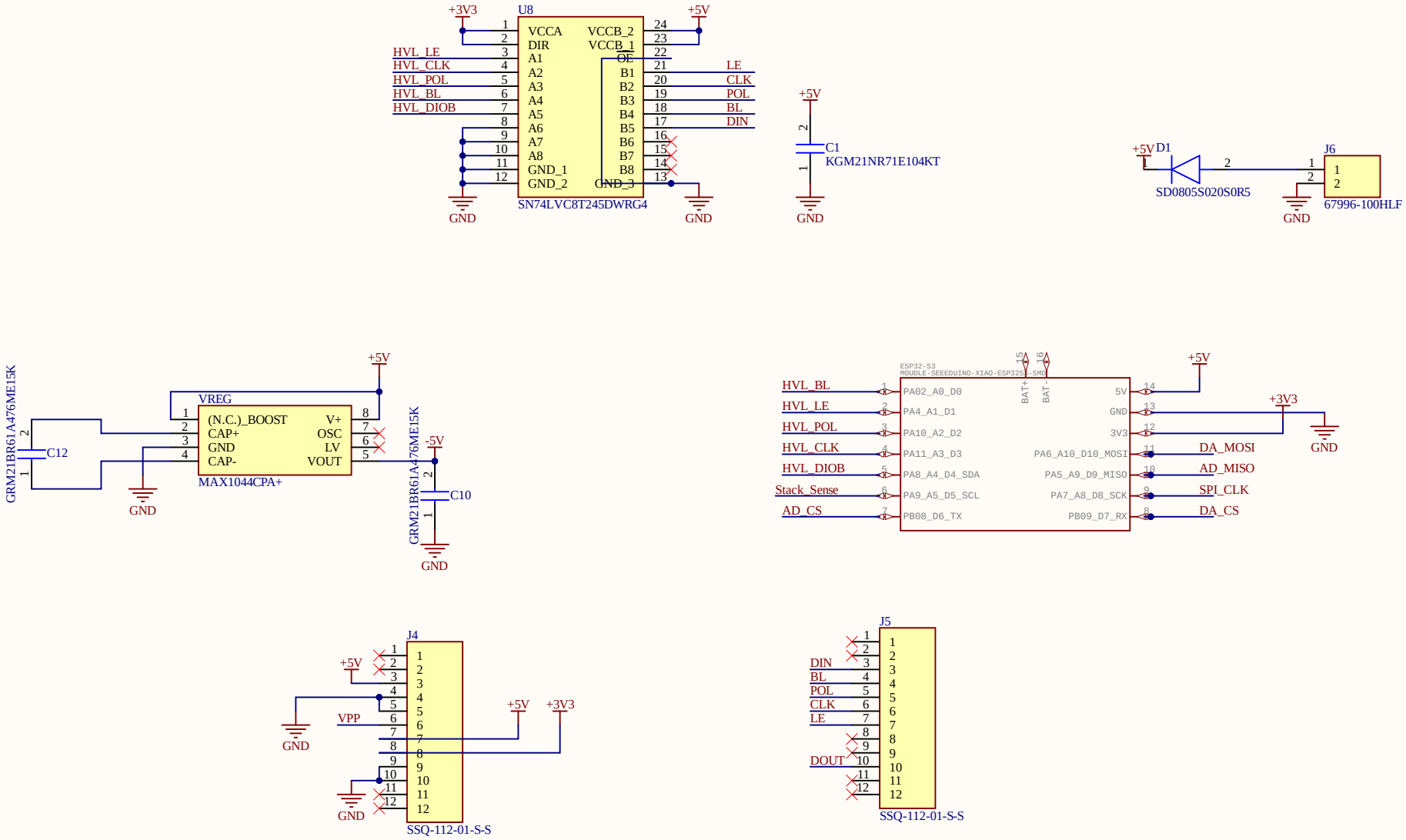

Title		
ESP2S3, VREG, Level_Shift, Output		
Size: A4	Number	Revision
Date: 2/11/2025		Sheet of
File: E:\UOM\..\Sheet4.SchDoc		Drawn By:

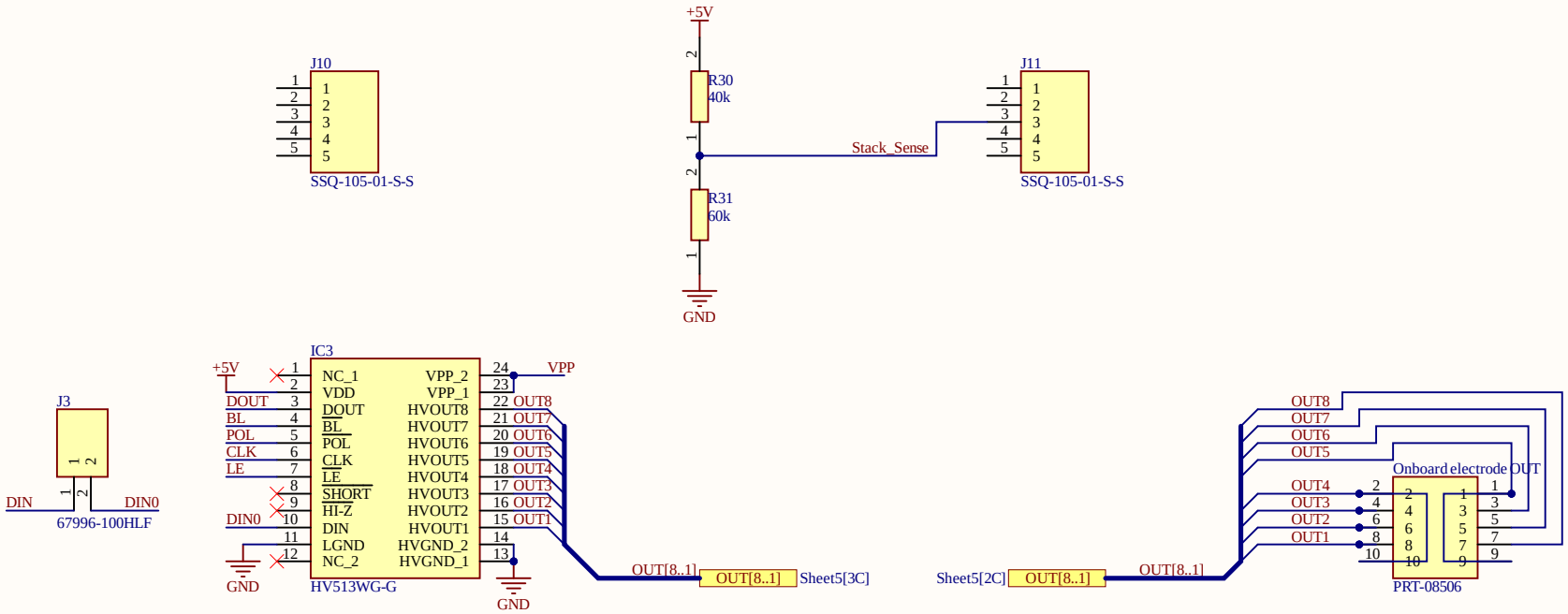

Title		
Size A4	Number	Revision
Date: 2/11/2025		Sheet of
File: E:\UOM\..\Sheet5.SchDoc		Drawn By:

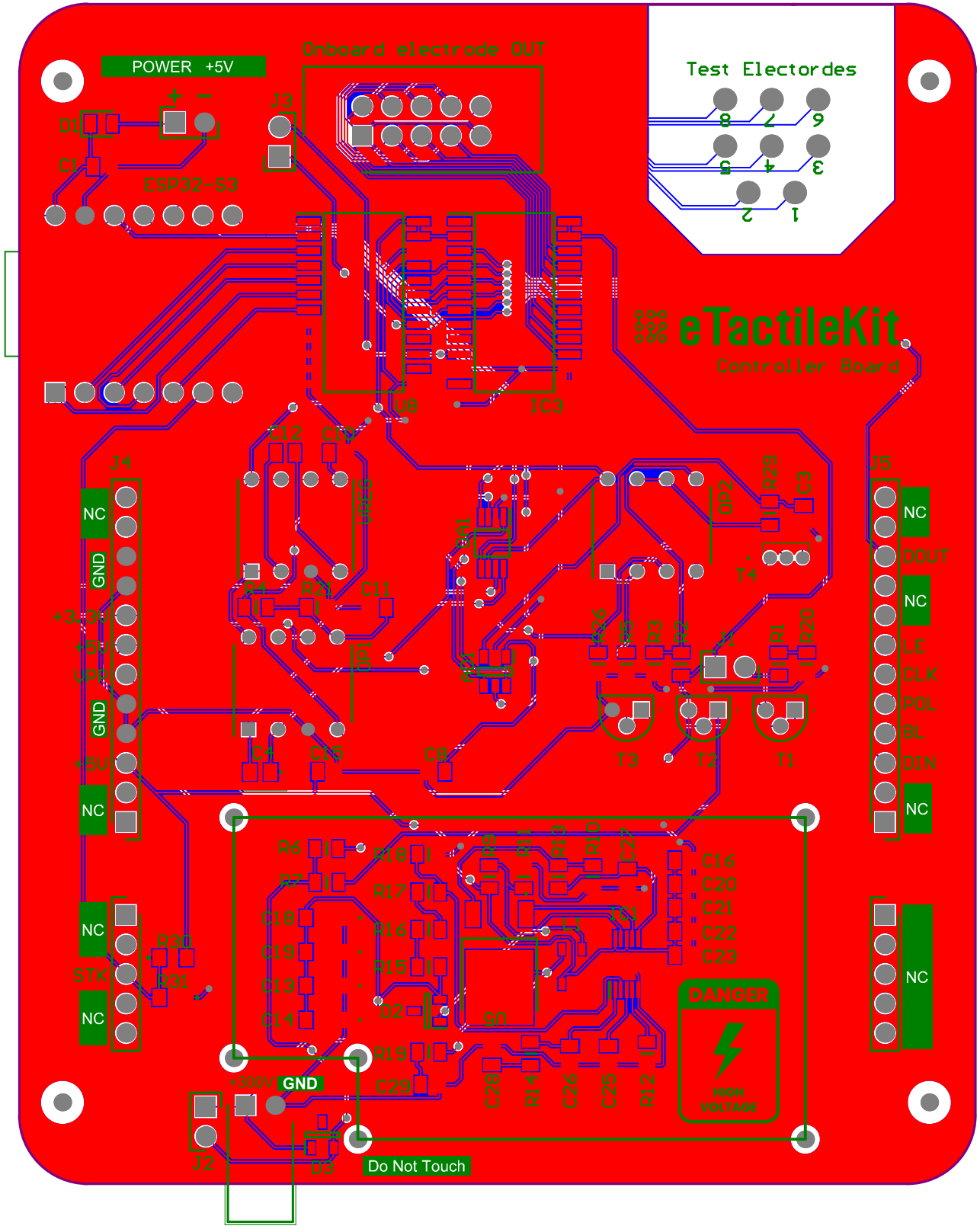
POWER +5V
Onboard electrode OUT
Test Electordes
eTactileKit
Controller Board
ESP32-S3
J3
J4
J5
J2
NC
GND
+3.3V
+5V
Upd
+5V
STK
DOUT
LE
CLK
POL
BL
DIN
+300V
DANGER
HIGH VOLTAGE
Do Not Touch