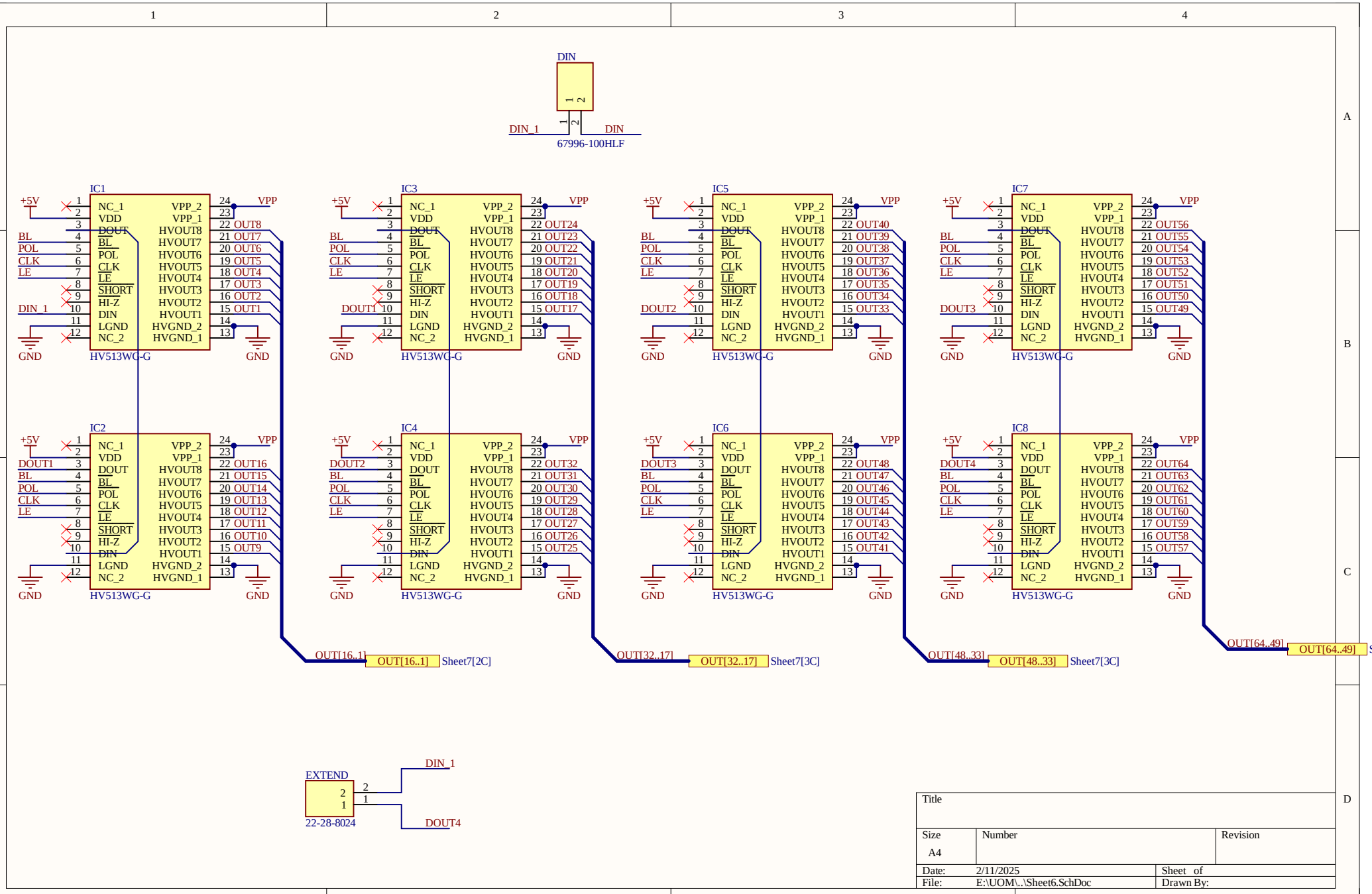
DIN
DIN_1
DIN
67996-100HLF
IC1
IC2
IC3
IC4
IC5
IC6
IC7
IC8
HV513WG-G
+5V
VPP
GND
BL
POL
CLK
LE
DIN_1
DOUT1
DOUT2
DOUT3
DOUT4
OUT[16..1]
Sheet7[2C]
OUT[32..17]
Sheet7[3C]
OUT[48..33]
Sheet7[3C]
OUT[64..49]
EXTEND
22-28-8024
DIN_1
DOUT4
Title
Size
A4
Number
Revision
Date:
2/11/2025
Sheet of
File:
E:\UOM\..\Sheet6.SchDoc
Drawn By:

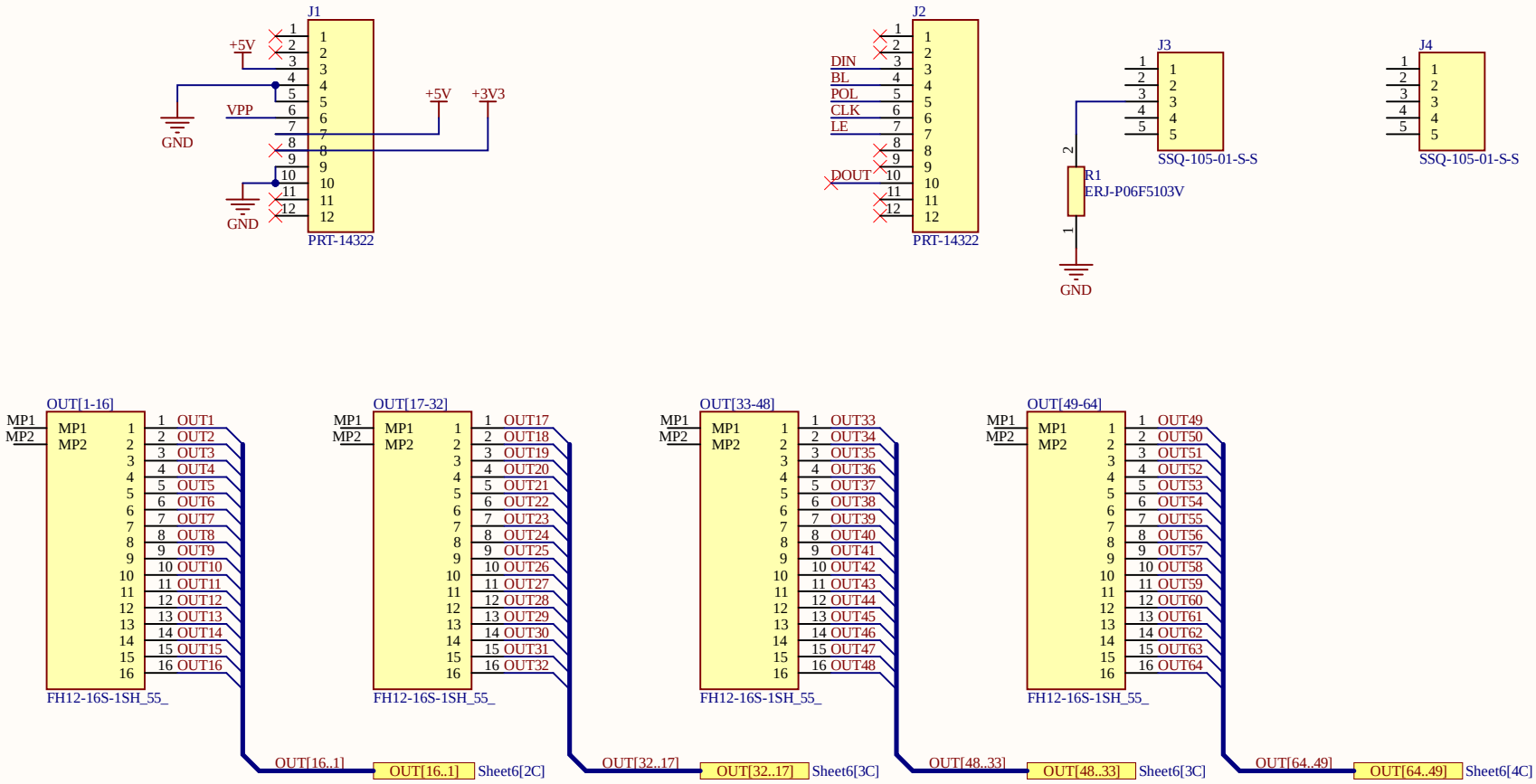

Title		
Size A4	Number	Revision
Date: 2/11/2025		Sheet of
File: E:\UOM\..\Sheet7.SchDoc		Drawn By:

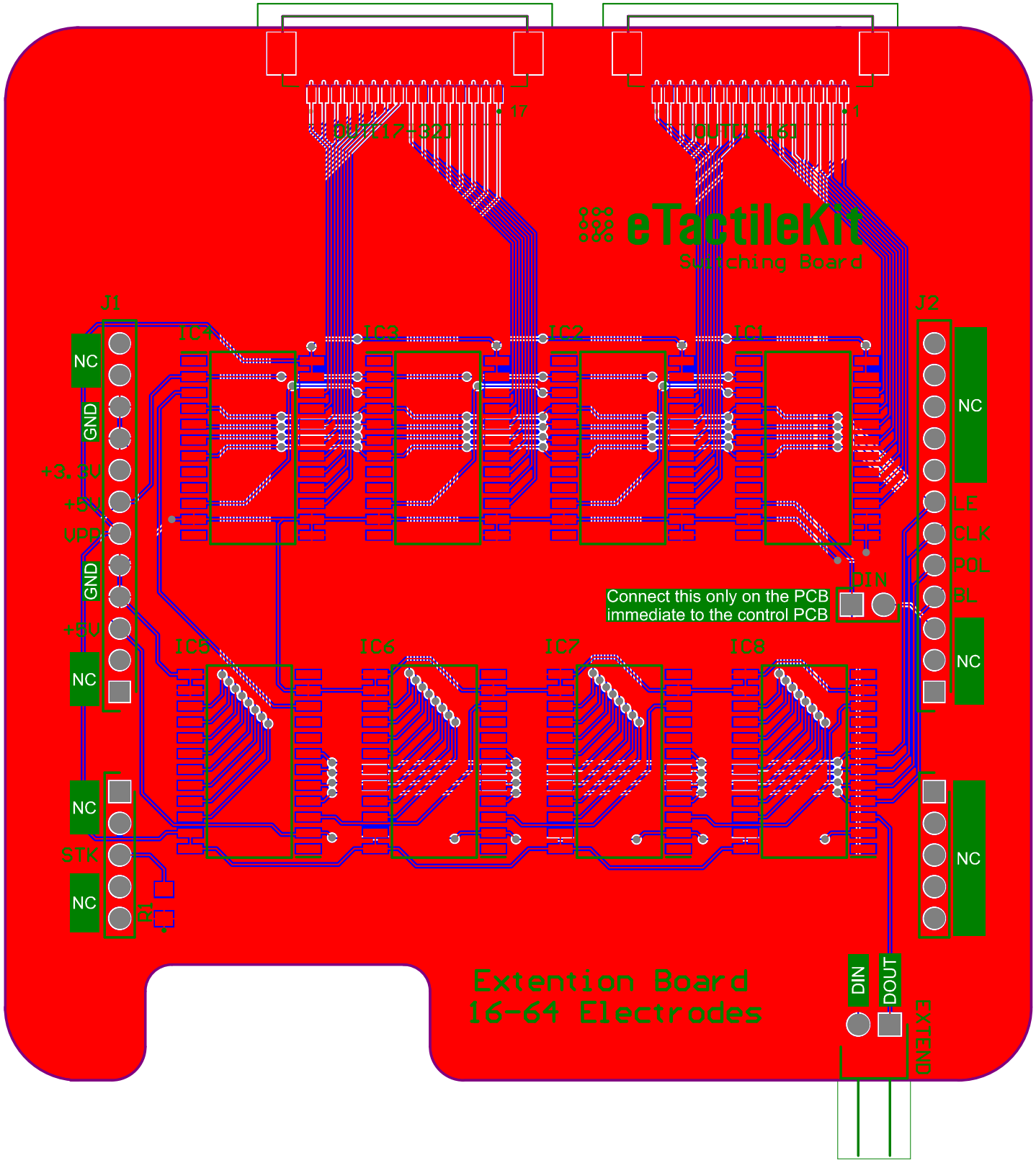
eTactileKit
Switching Board
J1
J2
IC4
IC3
IC2
IC1
IC5
IC6
IC7
IC8
NC
GND
+3.3V
+5V
VPP
GND
+5V
NC
NC
STK
NC
R1
NC
LE
CLK
POL
BL
NC
NC
DIN
Connect this only on the PCB
immediate to the control PCB
DIN
DOUT
EXTEND
Extention Board
16-64 Electrodes