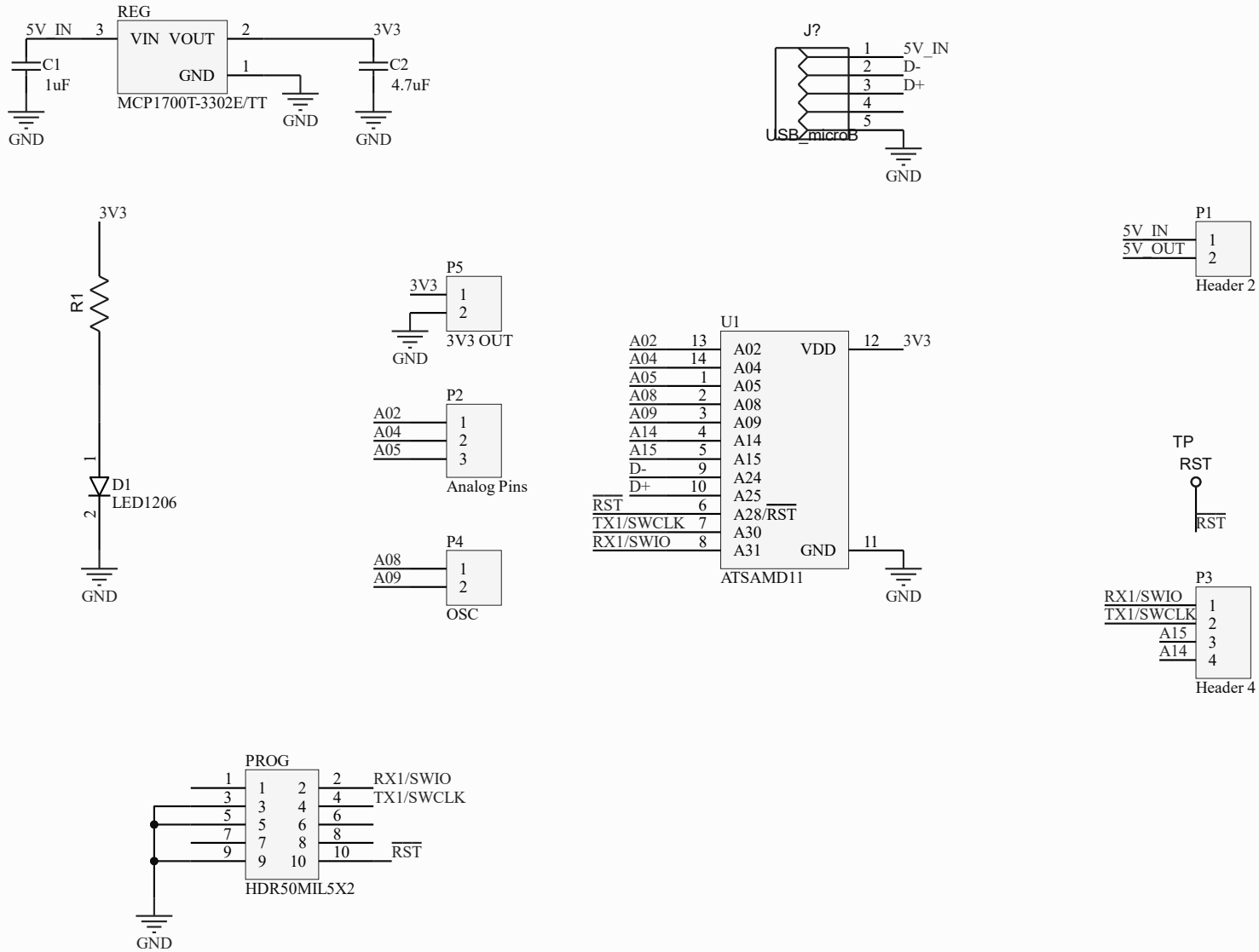

Title		
Size A	Number	Revision
Date: 1/29/2020		Sheet of
File: C:\Users\..\Hart_D11_breakout.SchDoc		Drawn By: