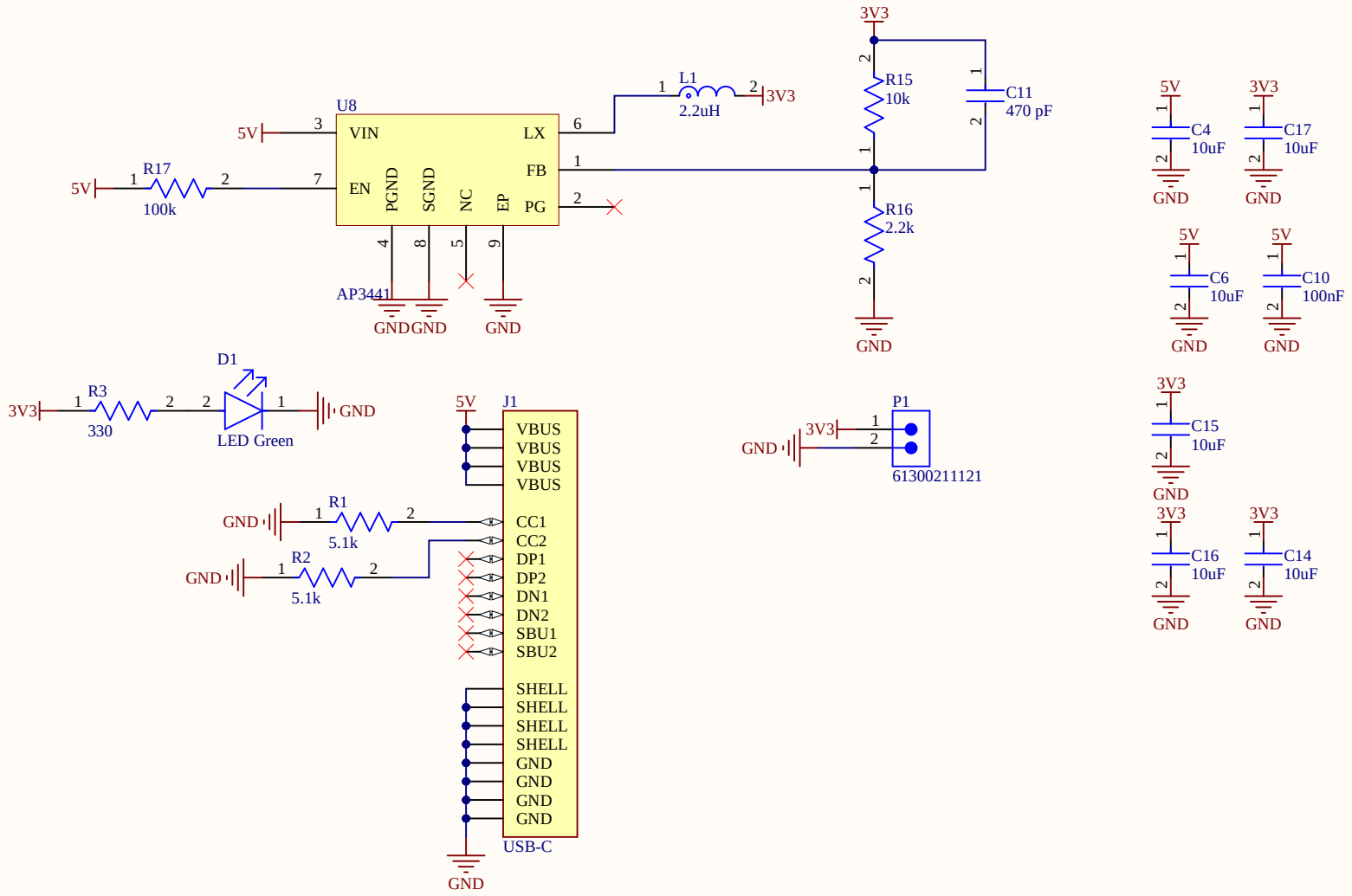

Title		
Size A	Number	Revision
Date: 9/05/2026		Sheet of
File: C:\Projects\..\PowerBlock.SchDoc		Drawn By:

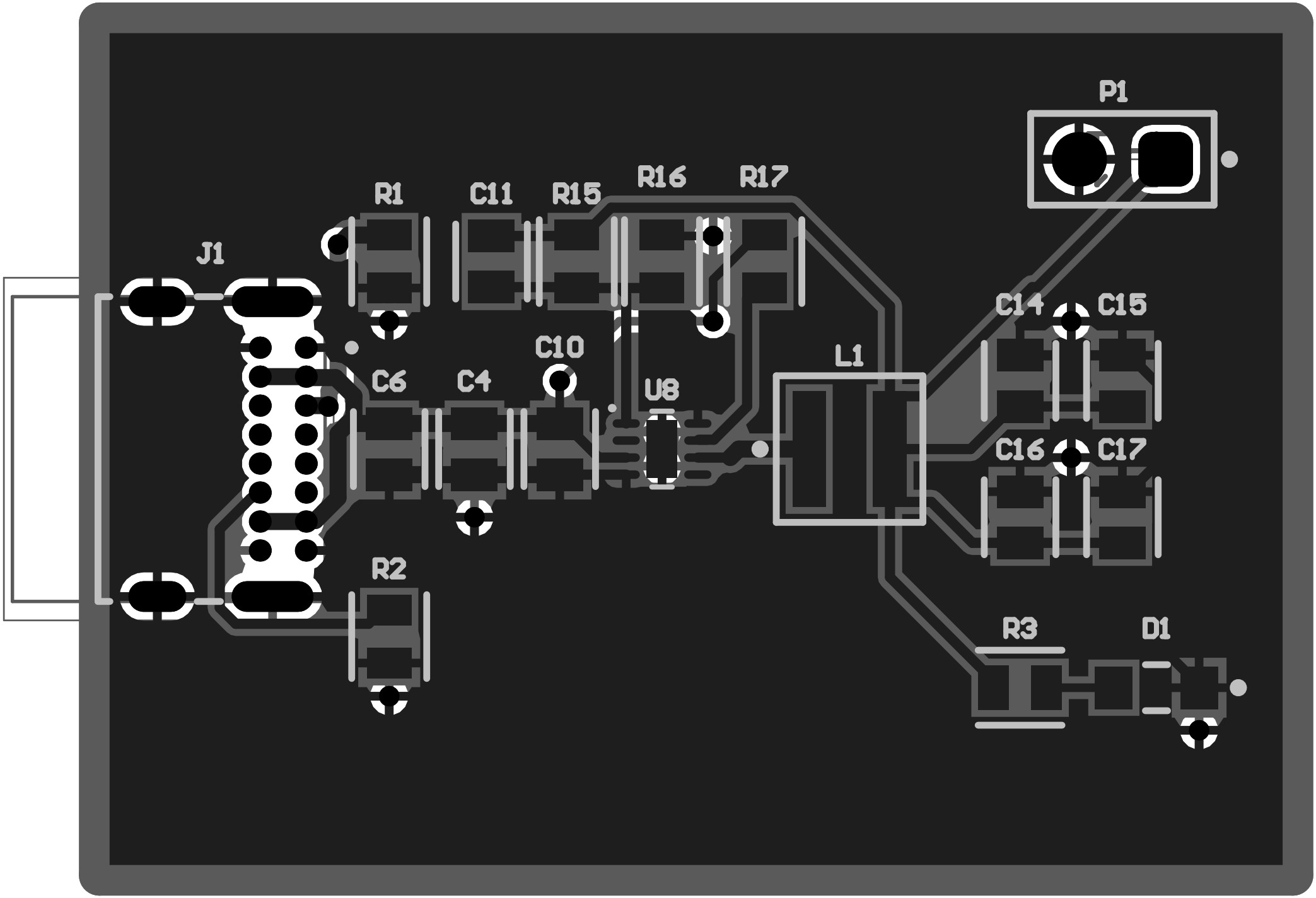
P1
R1
C11
R15
R16
R17
J1
C14
C15
C10
L1
C6
C4
U8
C16
C17
R2
R3
D1