Ainekko MXM Board

Cover Sheet	Page 1	SOC - NOC, Maxion Power	Page 20
Voltage Rail Definitions	Page 2	SOC - GPIO, CLK, JTAG	Page 21
Power Tree	Page 3	SOC - SPI, UART	Page 22
I2C Buses	Page 4	SOC - USB/Test	Page 23
MXM Card Edge Connector	Page 5	LPDDR4x - E01 - 1	Page 24
Buck-Boost Controller	Page 6	LPDDR4x - E01 - 2	Page 25
Atmel MCU	Page 7	LPDDR4x - E23 - 1	Page 26
USB to Serial Converter	Page 8	LPDDR4x - E23 - 2	Page 27
SOC - LPDDR4x - E01	Page 9	LPDDR4x - W01 - 1	Page 28
SOC - LPDDR4x - E23	Page 10	LPDDR4x - W01 - 2	Page 29
SOC - LPDDR4x - W01	Page 11	LPDDR4x - W23 - 1	Page 30
SOC - LPDDR4x - W23	Page 12	LPDDR4x - W23 - 2	Page 31
SOC PCIe	Page 13	PWR MINION, NOC	Page 32
SOC GND 1	Page 14	NOC Power Stages	Page 33
SOC GND 2	Page 15	PWR SCW	Page 34
SOC - DRAM and SRAM Power	Page 16	PWR VDD QLP, MXN, Logic	Page 35
SOC - No Connects	Page 17	PWR VDD DDR, Q, 1P5	Page 36
SOC - Pin Straps and Test	Page 18	PWR 1.8V, 3.3V Switched	Page 37
SOC - Minion Power	Page 19	Diode Sensor, Fan Header	Page 38

Modified 03/16/2026

aifoundry@nekko.ai

AINEKKO.

Doc Title: MXM		Doc Num: 400-00050	
Page Title: 01 - Cover Sheet		Drawn By: Bruce Klein	
Date: Monday, March 16, 2026	Size: C	Sheet: 1 of 38	Rev: 1

Voltage Rail Definitions and Ranges

Voltage Rail	Boot Voltage	PMIC Supported Range	Where Used
VDD_MNN	500mV	305mV - 750mV	Minions and some Neighborhood
VDD_NOC	430mV	305mV - 750mV	NOCs
VDD_SCW	750mV	550mV - 900mV	SCW logic including L2/L3 SRAM, 4x4 crossbar, Neighborhood 32KB shared L1 caches/logic, level shifters, LVPLLs, Sprinkler
VDD_MXN	850mV	650mV - 885mV	4 Maxions and their caches
VDD_DDR	800mV	700mV - 950mV	DRAM controllers (synopsys IP for 1066MHz) in MemShire
VDD_LOGIC	775mV	700mV - 900mV	Logic in IO shires, GPIO, PShire, fuse blocks, DFT
VDD_Q	1.1V	1.06V - 1.17V	DRAM internals, SoC/DRAM PHYs
VDD_QLP	640mV	530mV - 630mV	IO voltage to DRAM and SoC
VDD_PCIE_IO	1.5V	1.4V - 1.8V	PCIe IO
P1_8VSTDBY	1.8V	1.8V	PMIC Controller
VDDA_1P8	1.8V	1.8V	Analog 1.8V
VDD_1P8	1.8V	1.8V	SoC GPIO voltages, random board logic
P3_3V	3.3V	3.3V	USB and random board components

Note: Boot Voltages based upon SoC FW 0.8.0, PMIC FW 0.7.0
Values may change. Consult the firmware release documents.

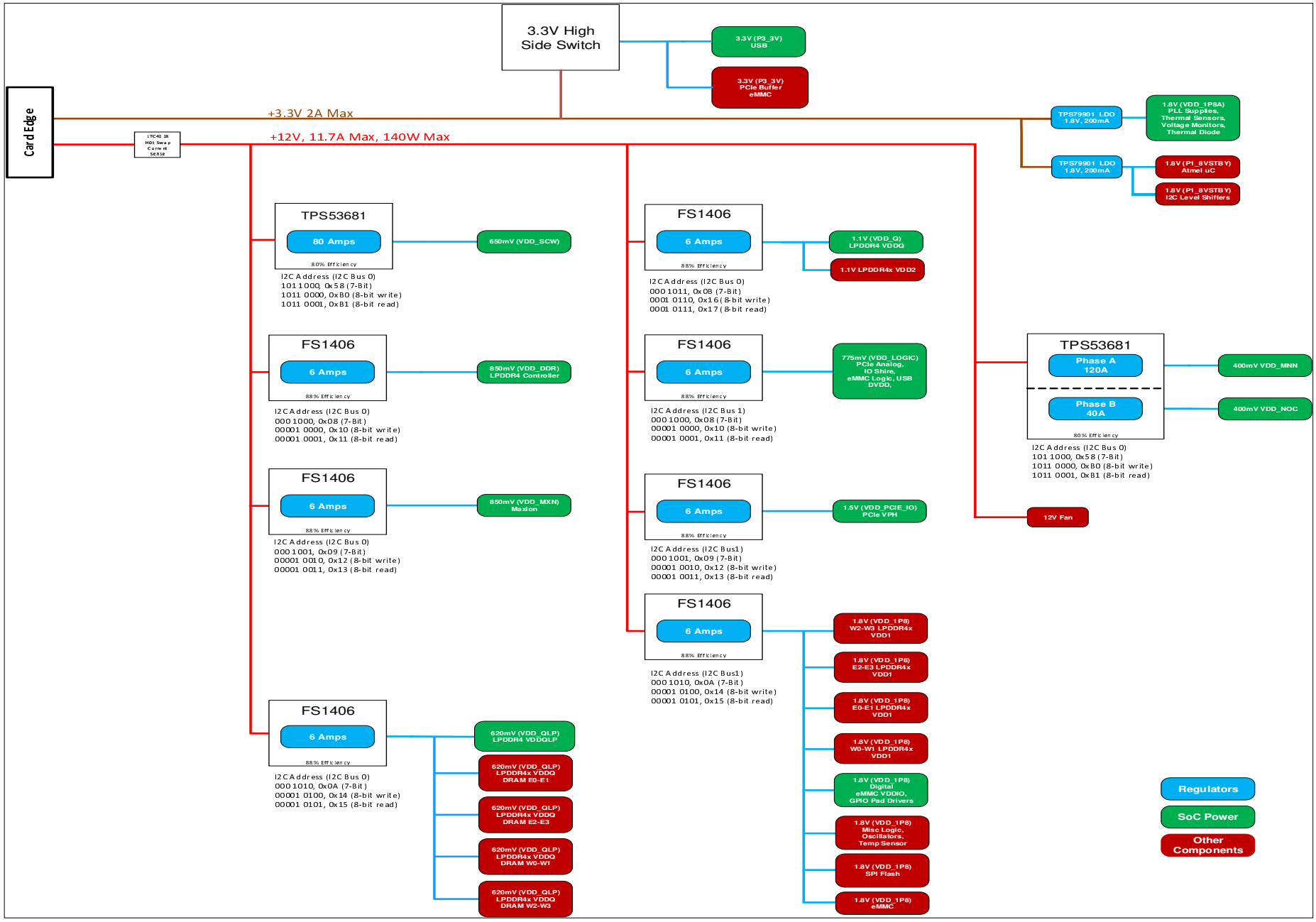

aifoundry@nekko.ai

AiNEKKO.

Doc Title: MXM		Doc Num: 400-00050	
Page Title: 03 - Power Tree		Drawn By: Bruce Klein	
Date: Monday, March 16, 2026	Size: C	Sheet: 3 of 38	Rev:

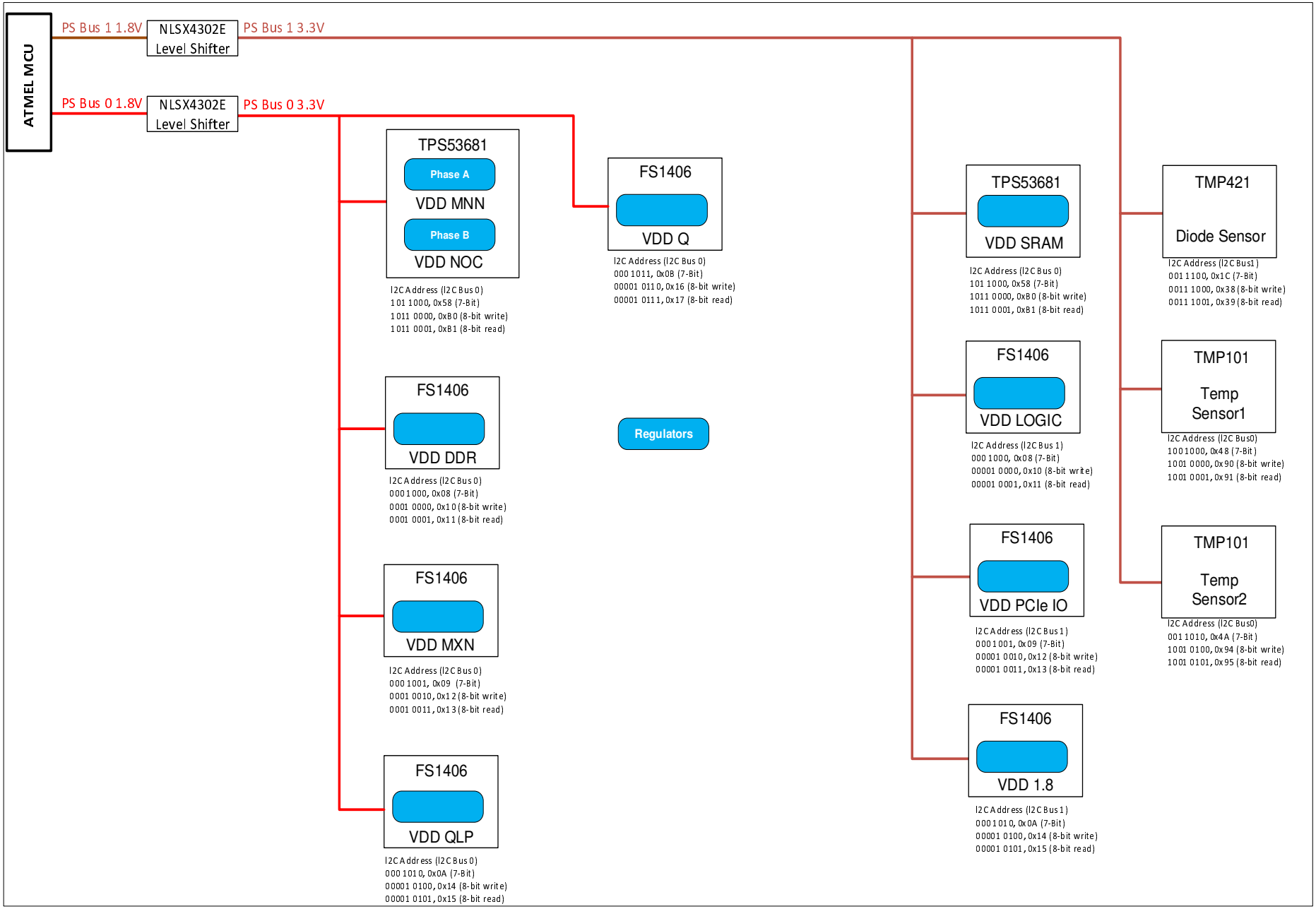

aifoundry@nekko.ai

NEKKO.

Doc Title: MXM		Doc Num: 400-00050	
Page Title: 04 - I2C Buses		Drawn By: Bruce Klein	
Date: Monday, March 16, 2026	Size: C	Sheet: 4 of 38	Rev:

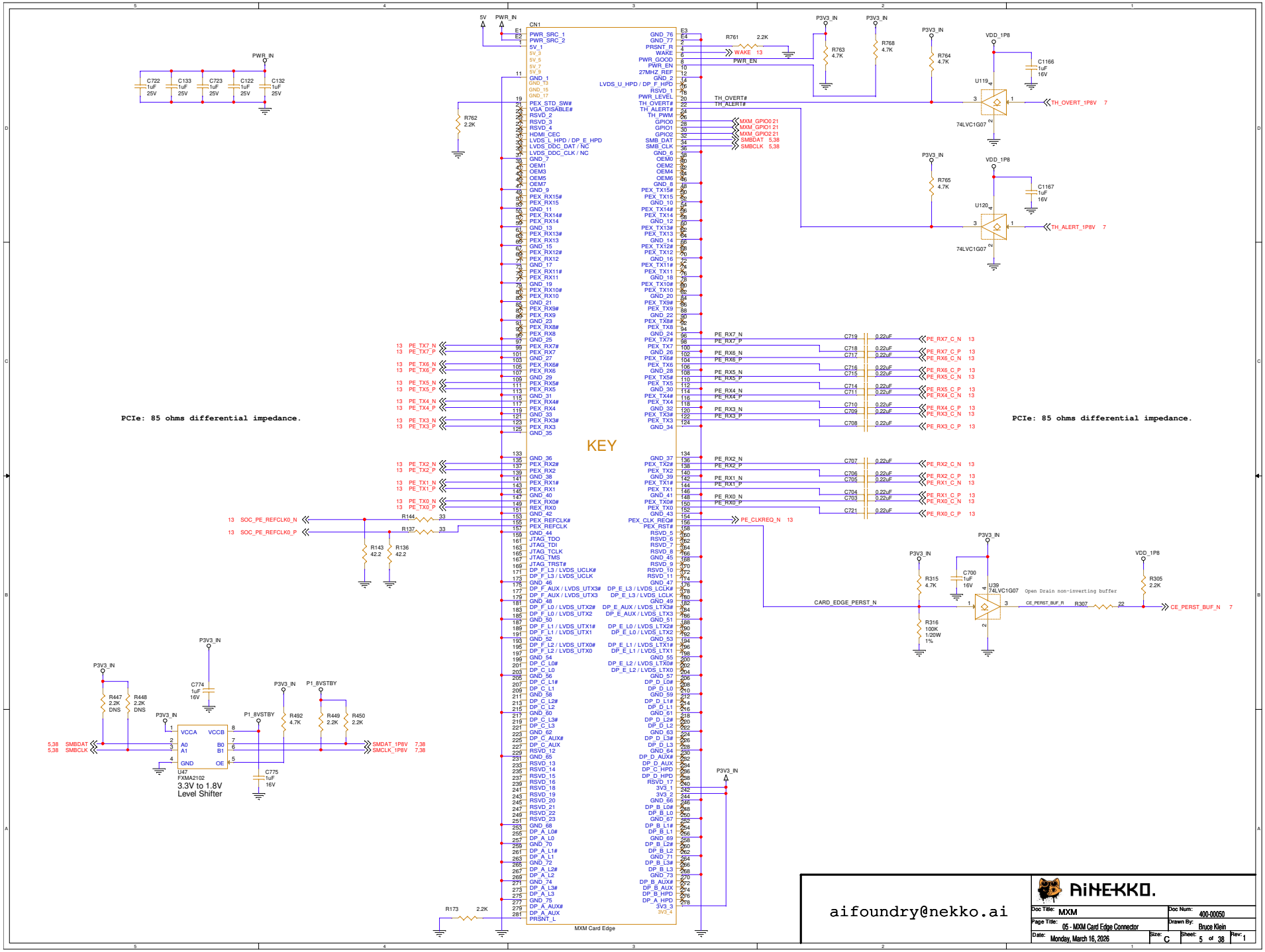

aifoundry@nekko.ai

Doc Title: MXM		Doc Num: 400-00050	
Page Title: 05 - MXM Card Edge Connector		Drawn By: Bruce Klein	
Date: Monday, March 16, 2026	Size: C	Sheet: 5 of 38	Rev: 1

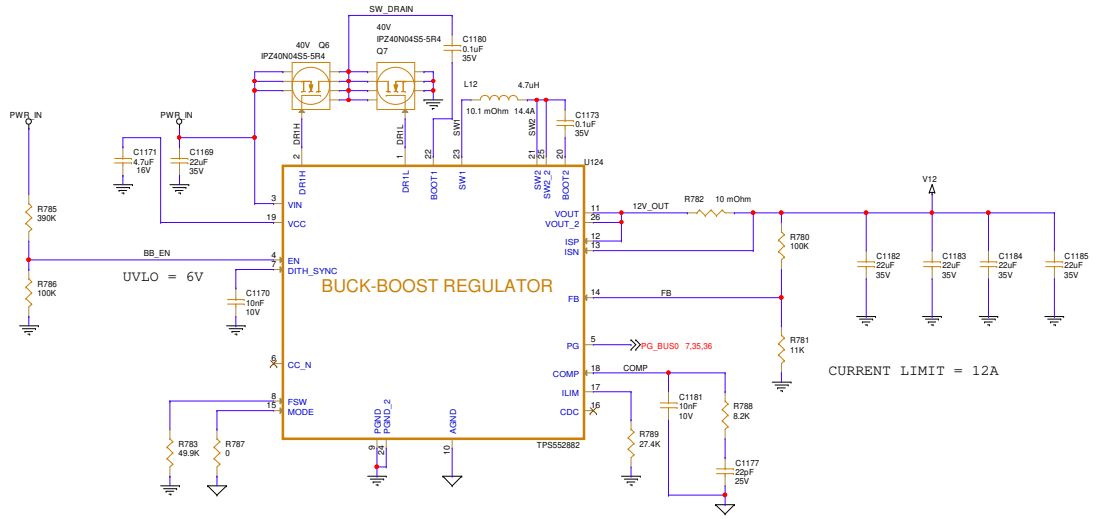

aifoundry@nekko.ai

NEKKO.

Doc Title: MXM		Doc Num: <Doc>	
Page Title: 06 - Buck-Boost Controller		Drawn By: <Drawn By>	
Date: Monday, March 16, 2026	Size: C	Sheet: 6 of 38	Rev: <RevCode>

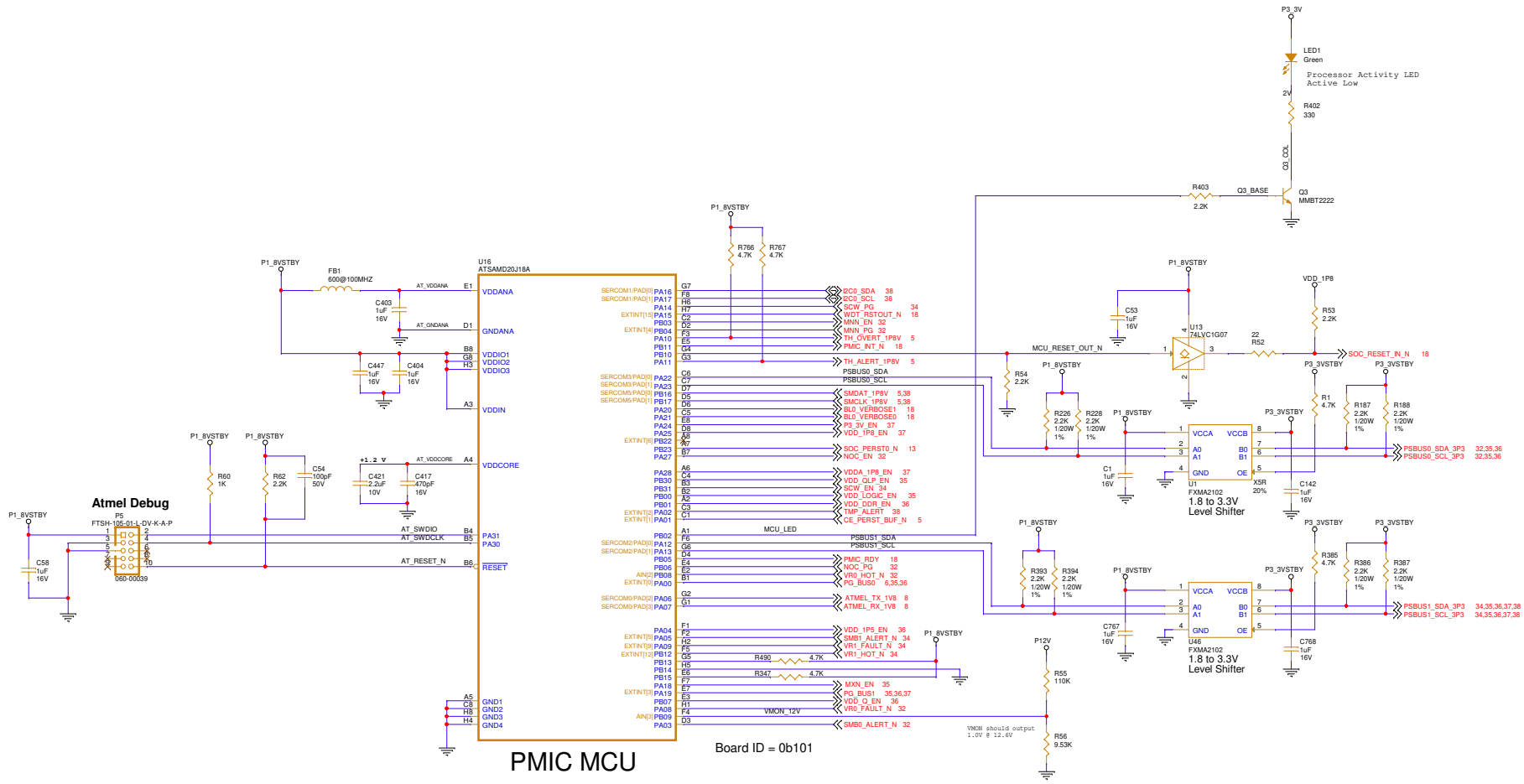

Signal Name	Type	Description
PAD[0]	Digital I/O	SDA
PAD[1]	Digital I/O	SCL
PAD[2]	Digital I/O	SDA_OUT (4-wire operation)
PAD[3]	Digital I/O	SCL_OUT (4-wire operation)

aifoundry@nekko.ai

NEKKO.

Doc Title: MXM		Doc Num: 400-00050	
Page Title: 07 - Atmel MCU		Drawn By: Bruce Klein	
Date: Monday, March 16, 2026	Size: C	Sheet: 7 of 38	Rev: 1

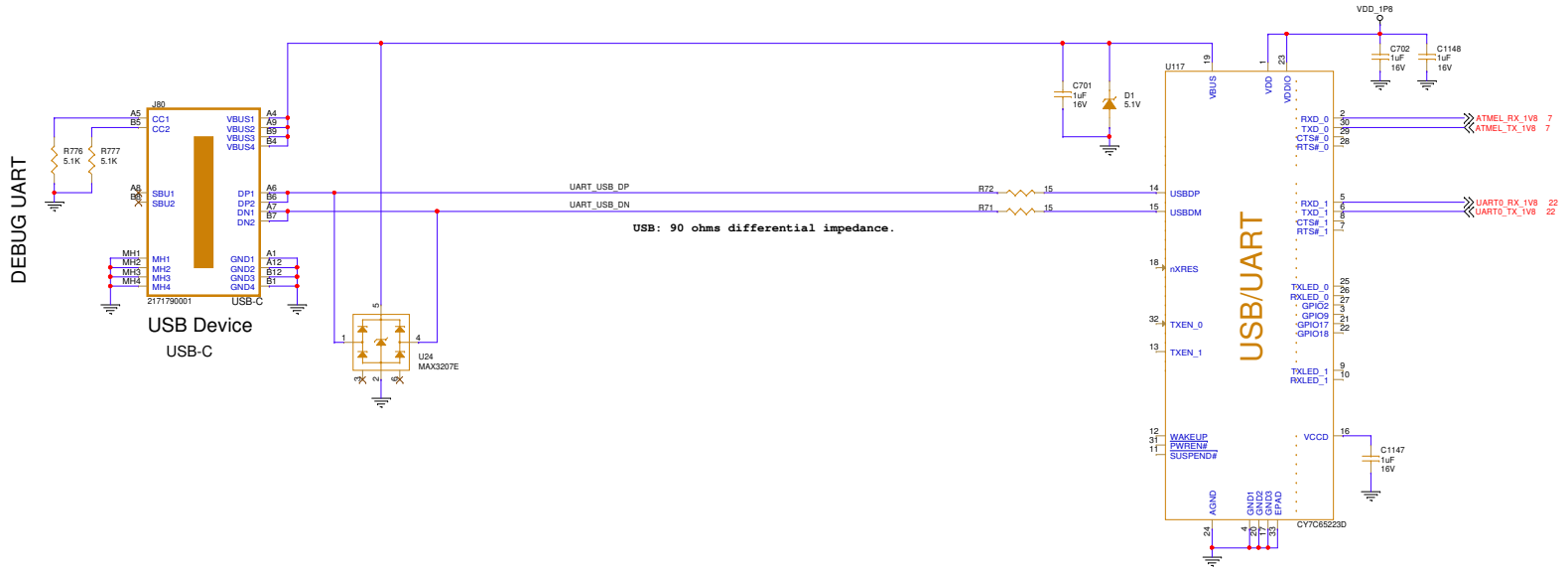

UART is not active until VDD_1P8 is enabled to prevent leakage current to SoC

aifoundry@nekko.ai

RiNEKKO.

Doc Title: MXM		Doc Num: 400-00050	
Page Title: 08 - USB-to-Serial Converter		Drawn By: Bruce Klein	
Date: Monday, March 16, 2026	Size: C	Sheet: 8 of 38	Rev: 1

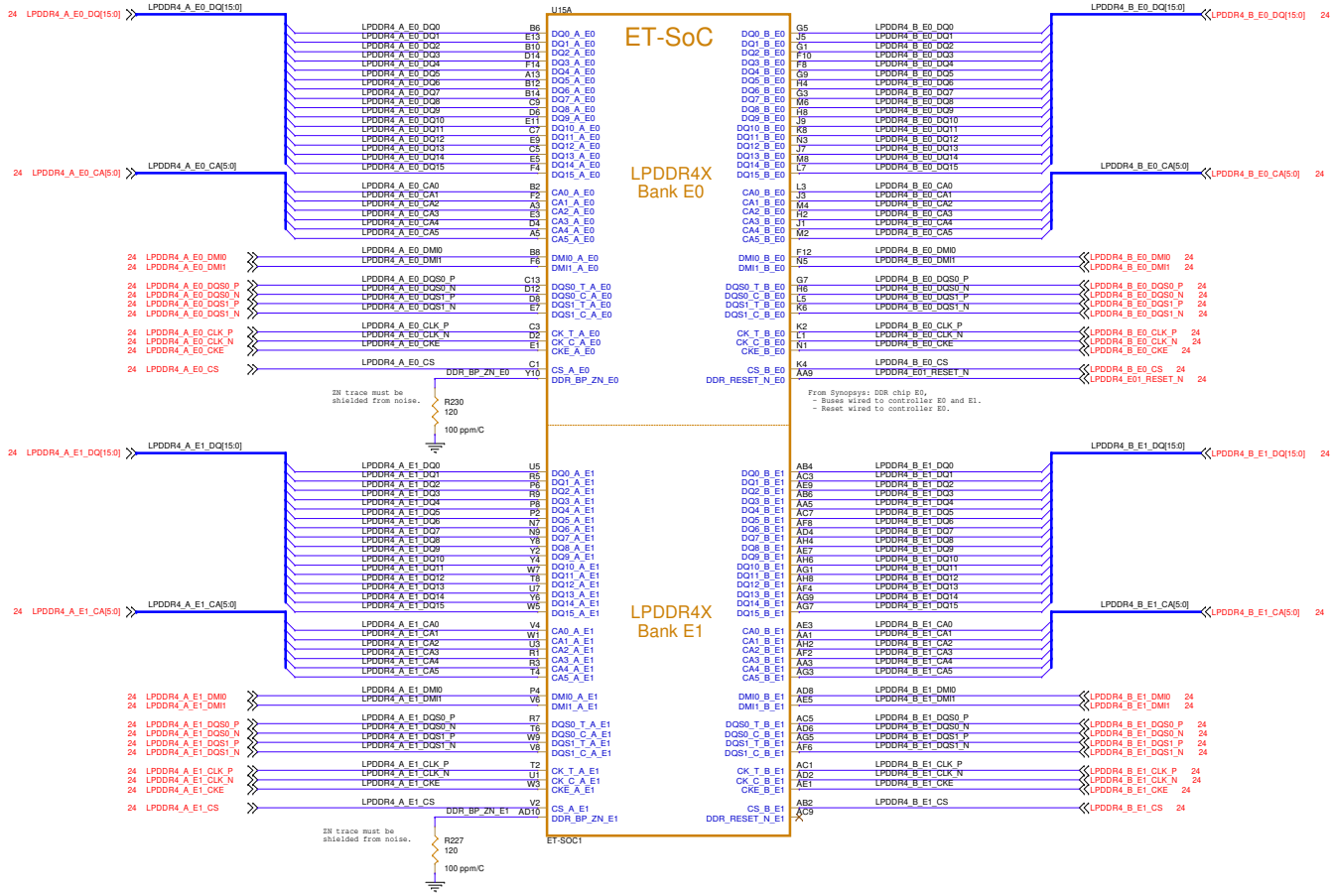

aifoundry@nekko.ai

Doc Title: MXM		Doc Num: 400-00050	
Page Title: 09 - SOC - LPDDR4x - E01		Drawn By: Bruce Klein	
Date: Monday, March 16, 2026	Size: C	Sheet: 9 of 38	Rev: 1

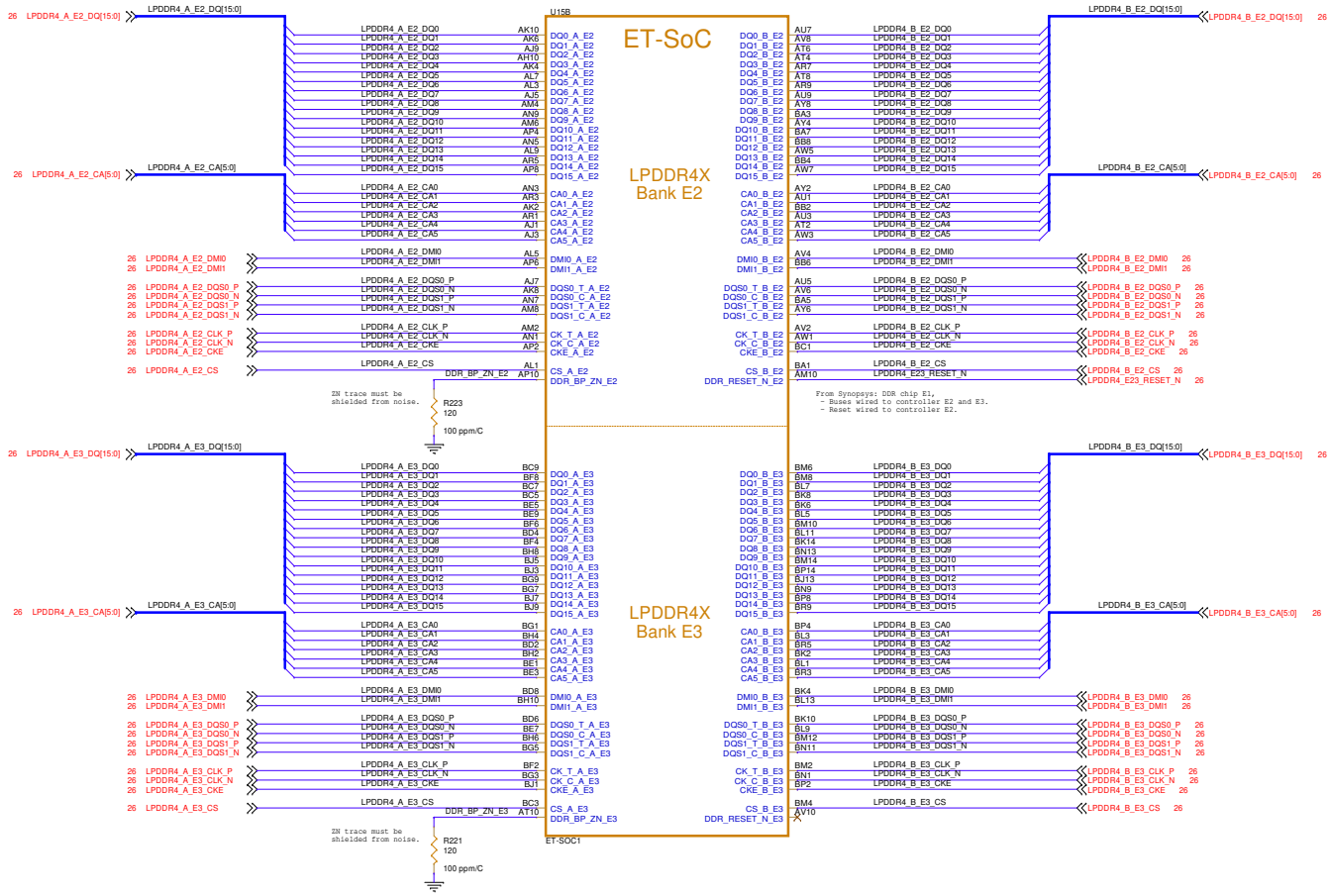

aifoundry@nekko.ai

Doc Title: MXM		Doc Num: 400-00050	
Page Title: 10 - SOC - LPDDR4x - E23		Drawn By: Bruce Klein	
Date: Monday, March 16, 2026	Size: C	Sheet: 10 of 38	Rev: 1

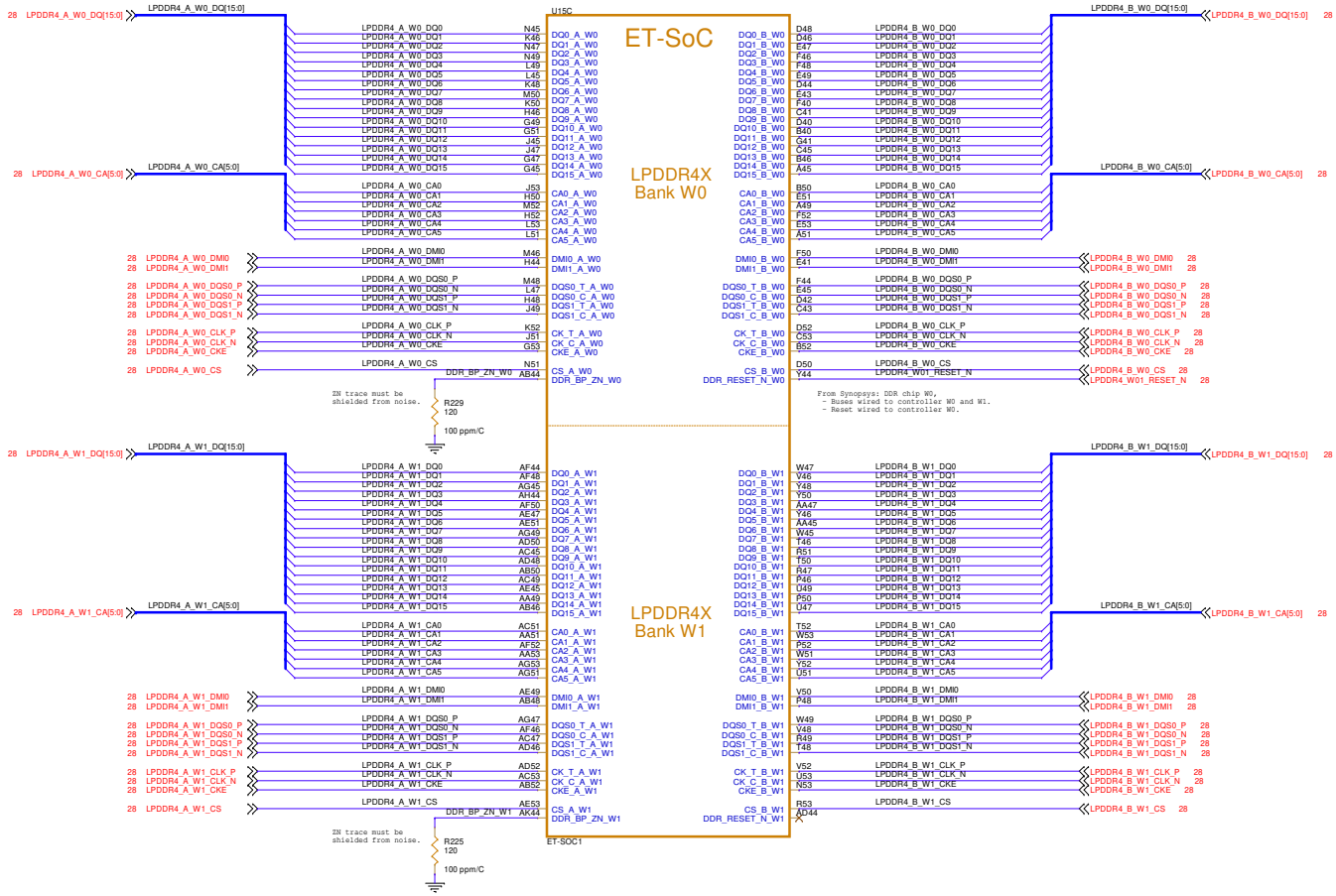

aifoundry@nekko.ai

NEKKO.

Doc Title: MXM		Doc Num: 400-00050	
Page Title: 11 - SOC - LPDDR4x - W01		Drawn By: Bruce Klein	
Date: Monday, March 16, 2026	Size: C	Sheet: 11 of 38	Rev: 1

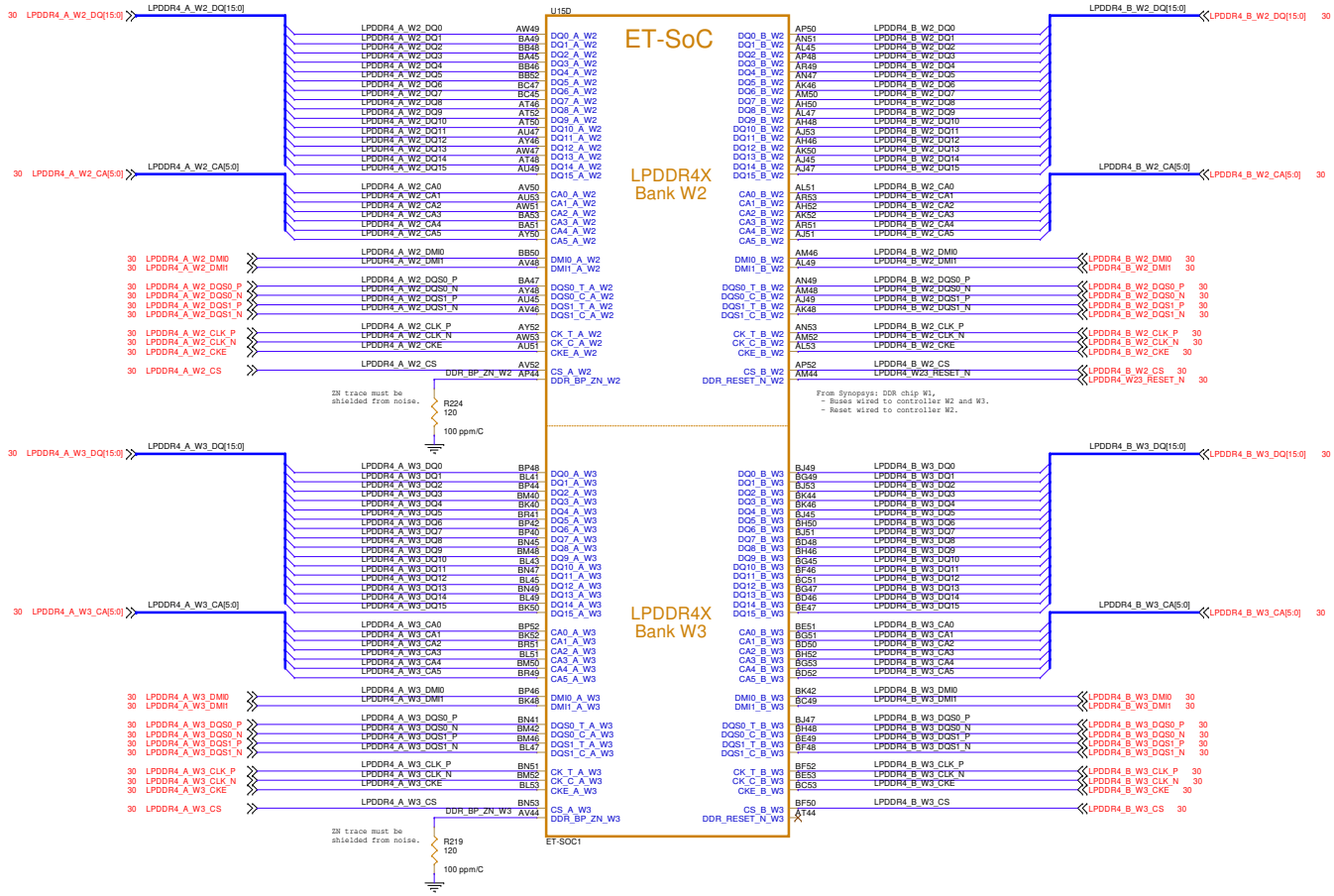

aifoundry@nekko.ai

NEKKO.

Doc Title: MXM		Doc Num: 400-00050	
Page Title: 12 - SOC - LPDDR4x - W23		Drawn By: Bruce Klein	
Date: Monday, March 16, 2026	Size: C	Sheet: 12 of 38	Rev: 1

Esperanto PCISIG ID is x1E0A.

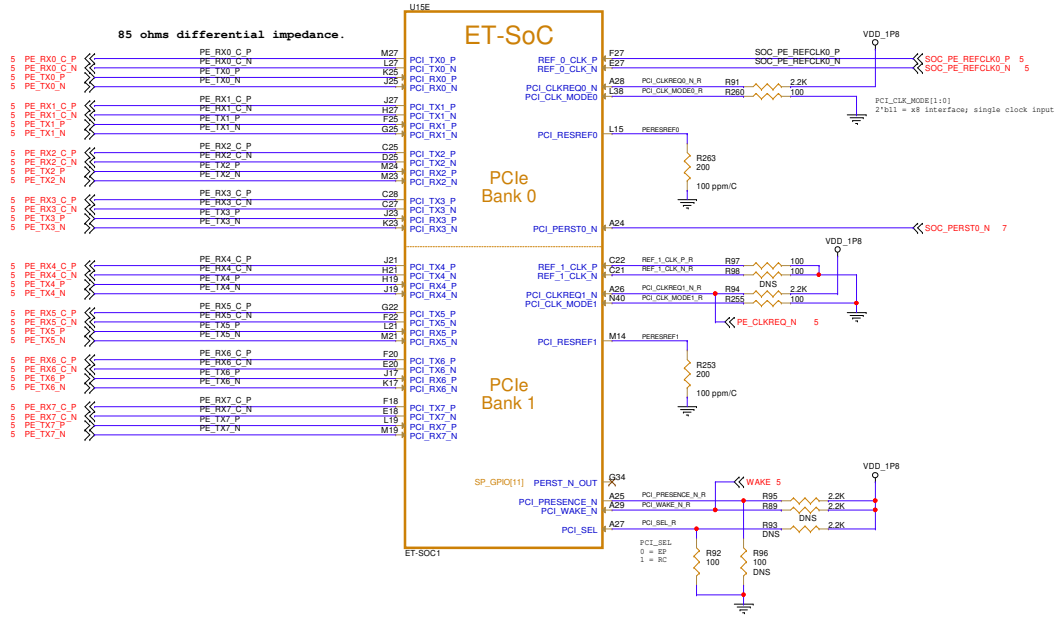

aifoundry@nekko.ai

Doc Title: MXM		Doc Num: 400-00050	
Page Title: 13 - SOC - PCIe		Drawn By: Bruce Klein	
Date: Monday, March 16, 2026	Size: C	Sheet: 13 of 38	Rev: 1

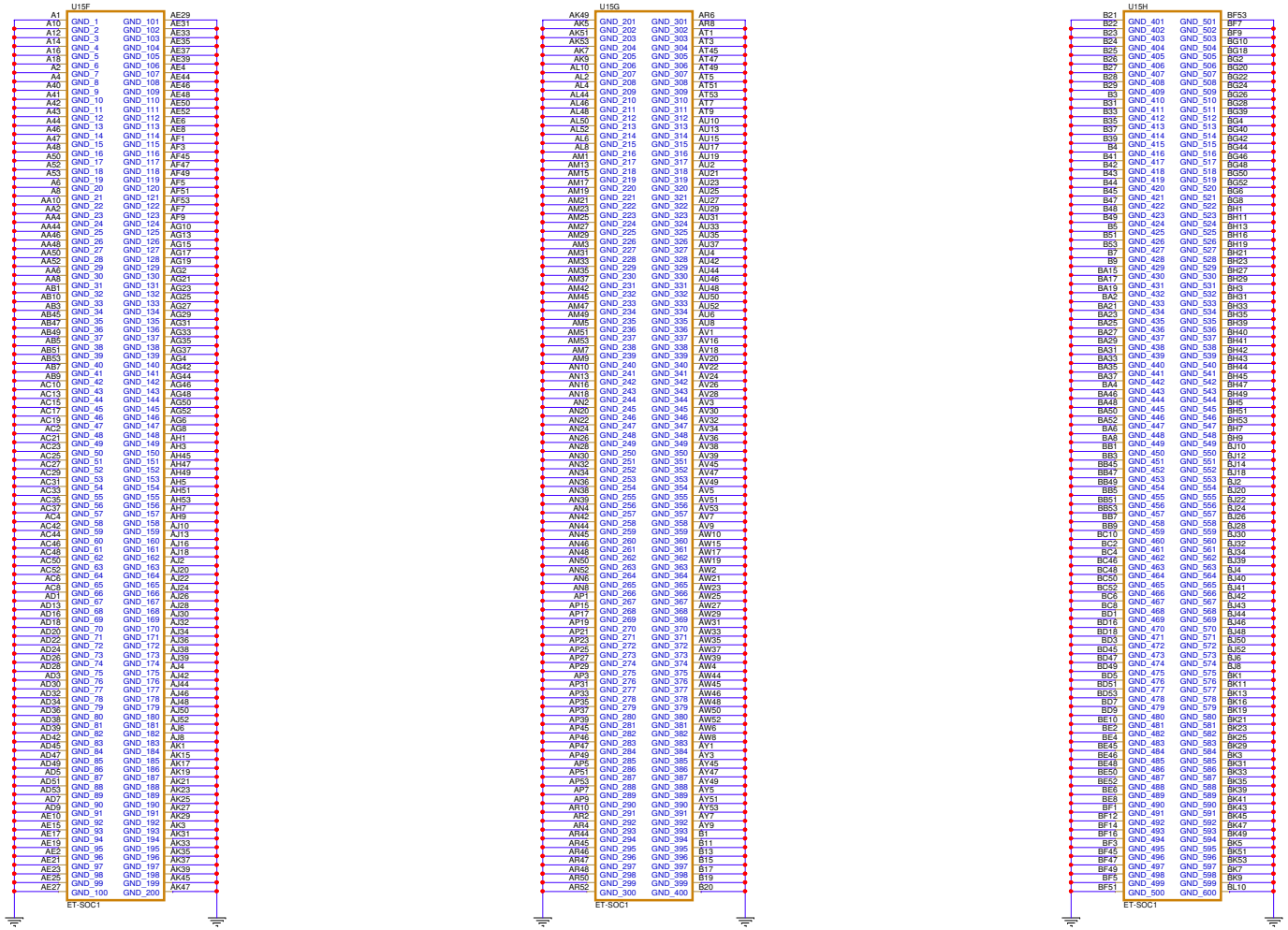

aifoundry@nekko.ai

NEKKO.

Doc Title: MXM		Doc Num: 400-00050	
Page Title: 14 - SOC - GND 1		Drawn By: Bruce Klein	
Date: Monday, March 16, 2026	Size: C	Sheet: 14 of 38	Rev: 1

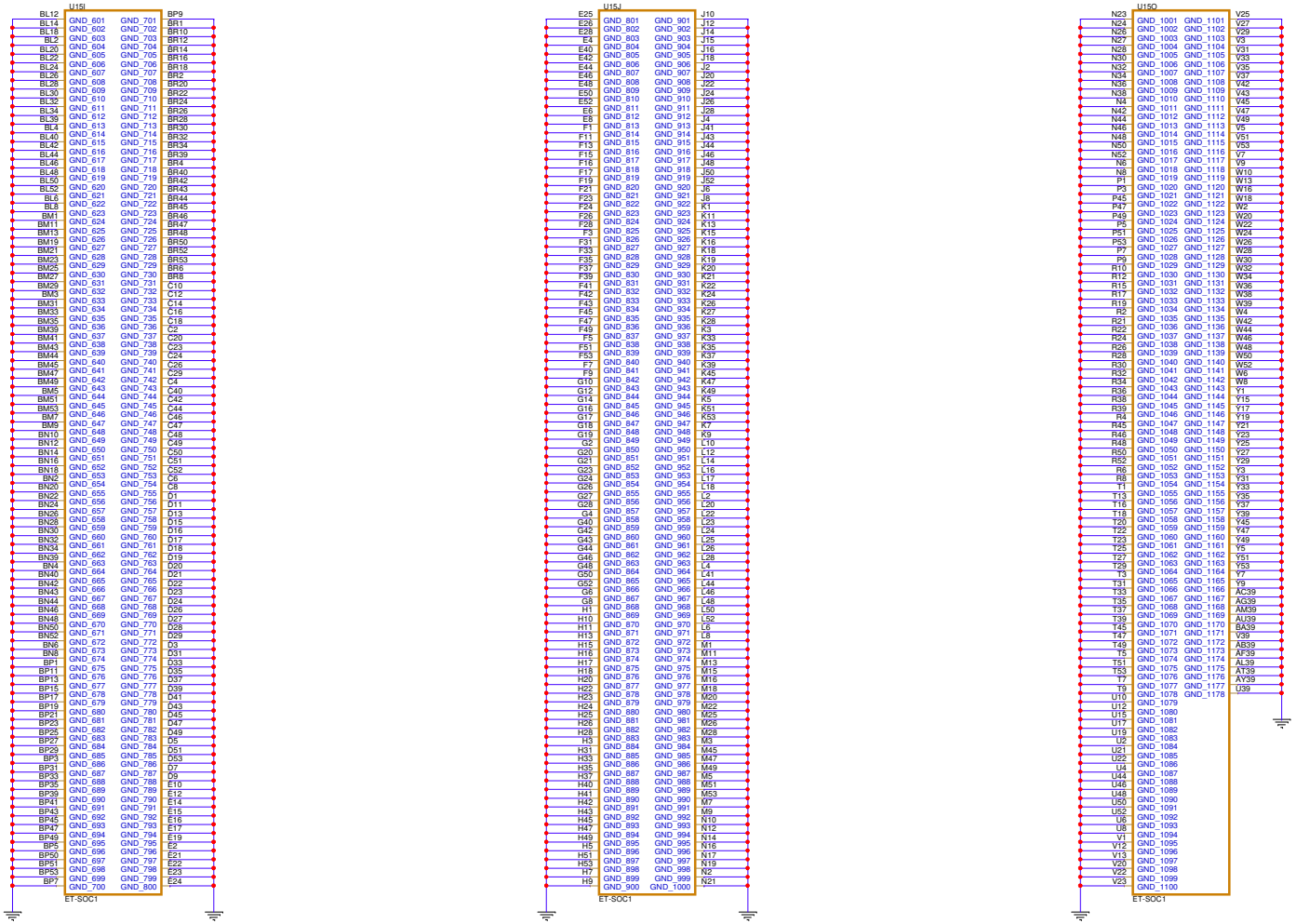

aifoundry@nekko.ai

RiNEKKO.

Doc Title: MXM		Doc Num: 400-00050	
Page Title: 15 - SOC - GND 2		Drawn By: Bruce Klein	
Date: Monday, March 16, 2026	Size: C	Sheet: 15 of 38	Rev: 1

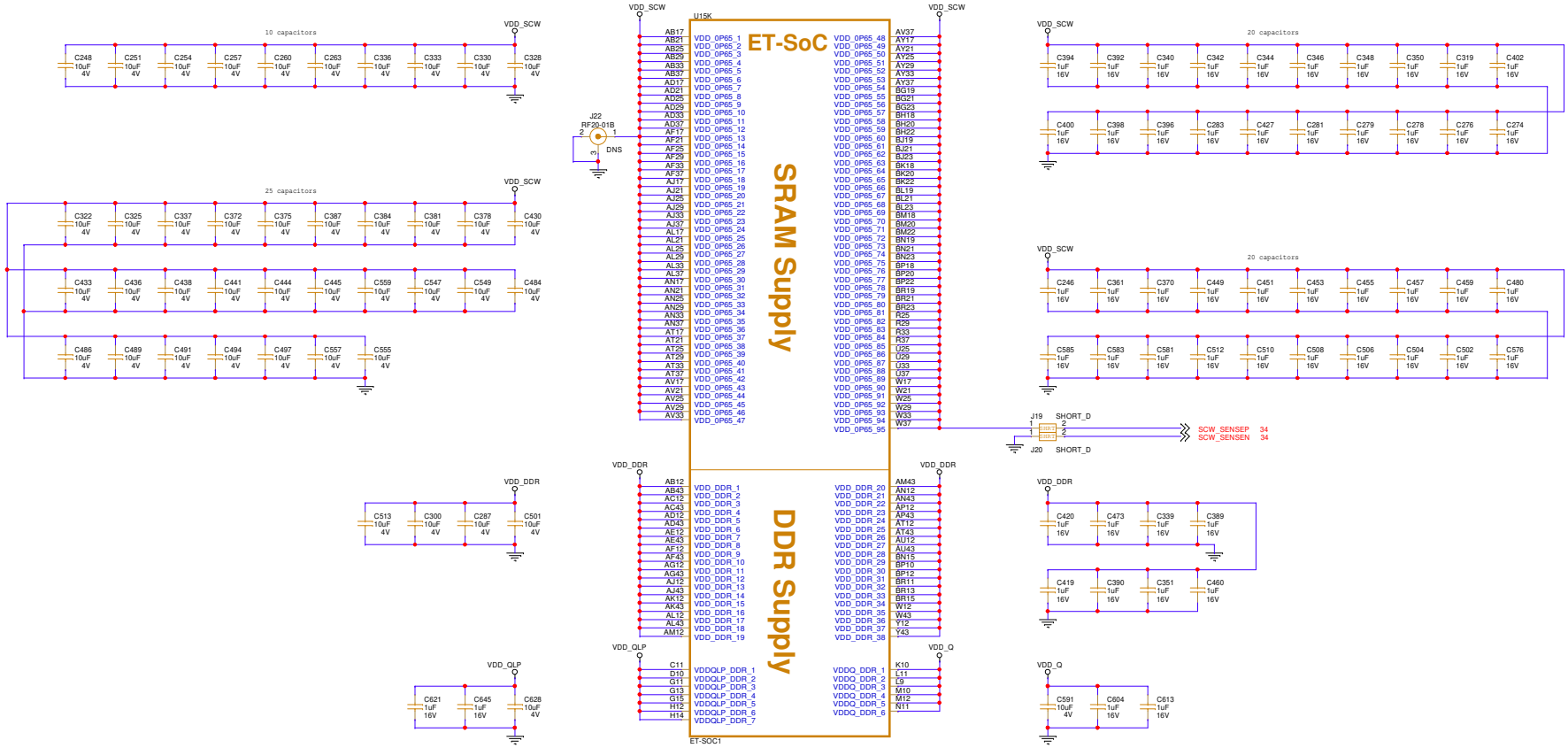

aifoundry@nekko.ai

Doc Title: MXM		Doc Num: 400-00050	
Page Title: 16 - SOC - DRAM and SRAM Power		Drawn By: Bruce Klein	
Date: Monday, March 16, 2026	Size: C	Sheet: 16 of 38	Rev: 1

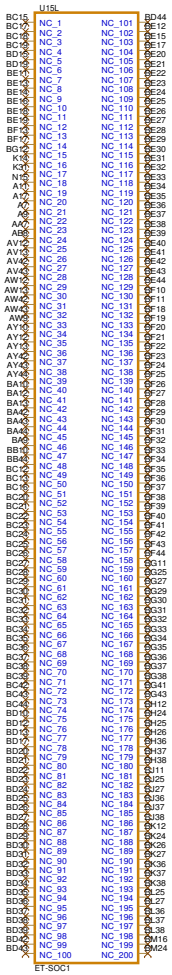

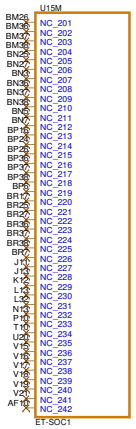

aifoundry@nekko.ai

NEKKO.

Doc Title: MXM		Doc Num: 400-00050	
Page Title: 17 - SOC - NC Pins		Drawn By: Bruce Klein	
Date: Monday, March 16, 2026	Size: C	Sheet: 17 of 38	Rev: 1

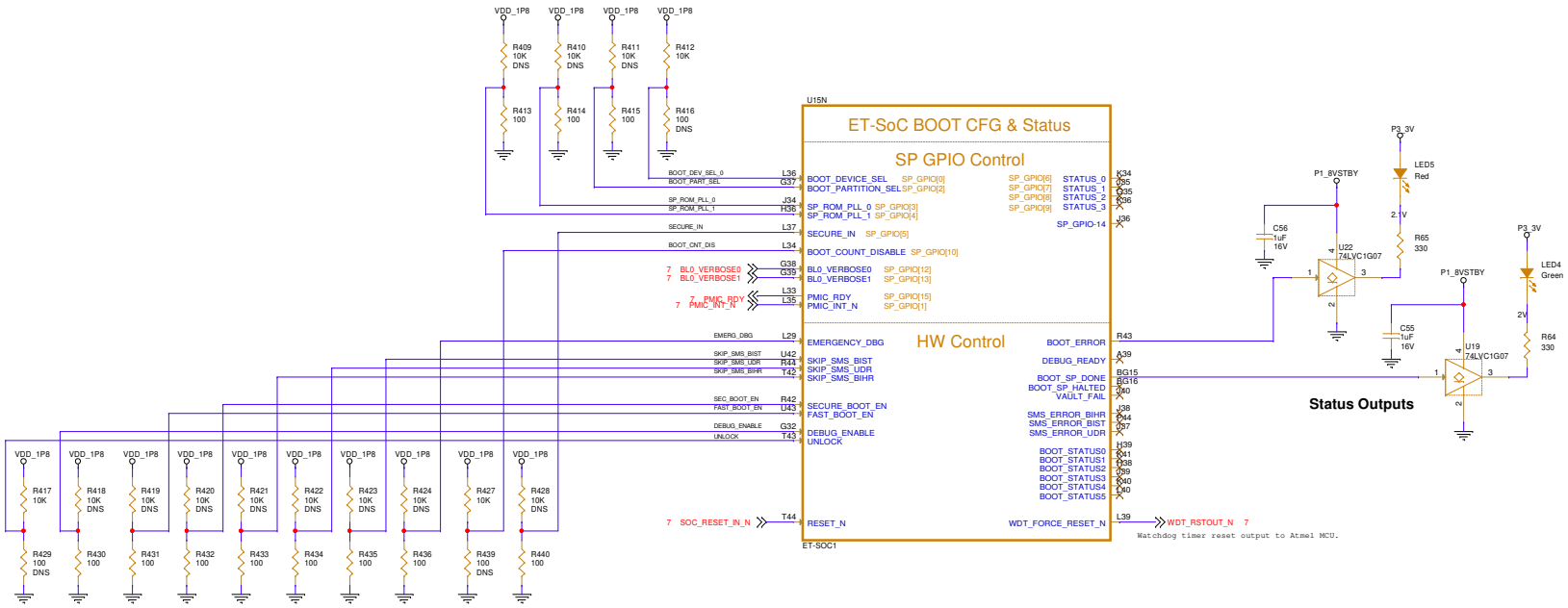

SOC - Pin Strap Inputs

Pin Strap	Default Value
BOOT_DEVICE_SEL	High
BOOT_PART_SEL	Low
SP_ROM_PLL_O	Low
SP_ROM_PLL_1	Low
SECURE_IN	Low
BL0_VERBOSE0	PMIC
BL0_VERBOSE1	PMIC
EMERGENCY_DBG	Low
SKIP_SMS_BIST	Low
SKIP_SMS_UDR	Low
SKIP_SMS_BIHR	Low
SECURE_BOOT_EN	Low
FAST_BOOT_EN	Low
DEBUG_ENABLE	Low
UNLOCK	High

aifoundry@nekko.ai

RiNEKKO.

Doc Title: MXM		Doc Num: 400-00050	
Page Title: 18 - SOC - Pin-straps and Test		Drawn By: Bruce Klein	
Date: Monday, March 16, 2026	Size: C	Sheet: 18 of 38	Rev: 1

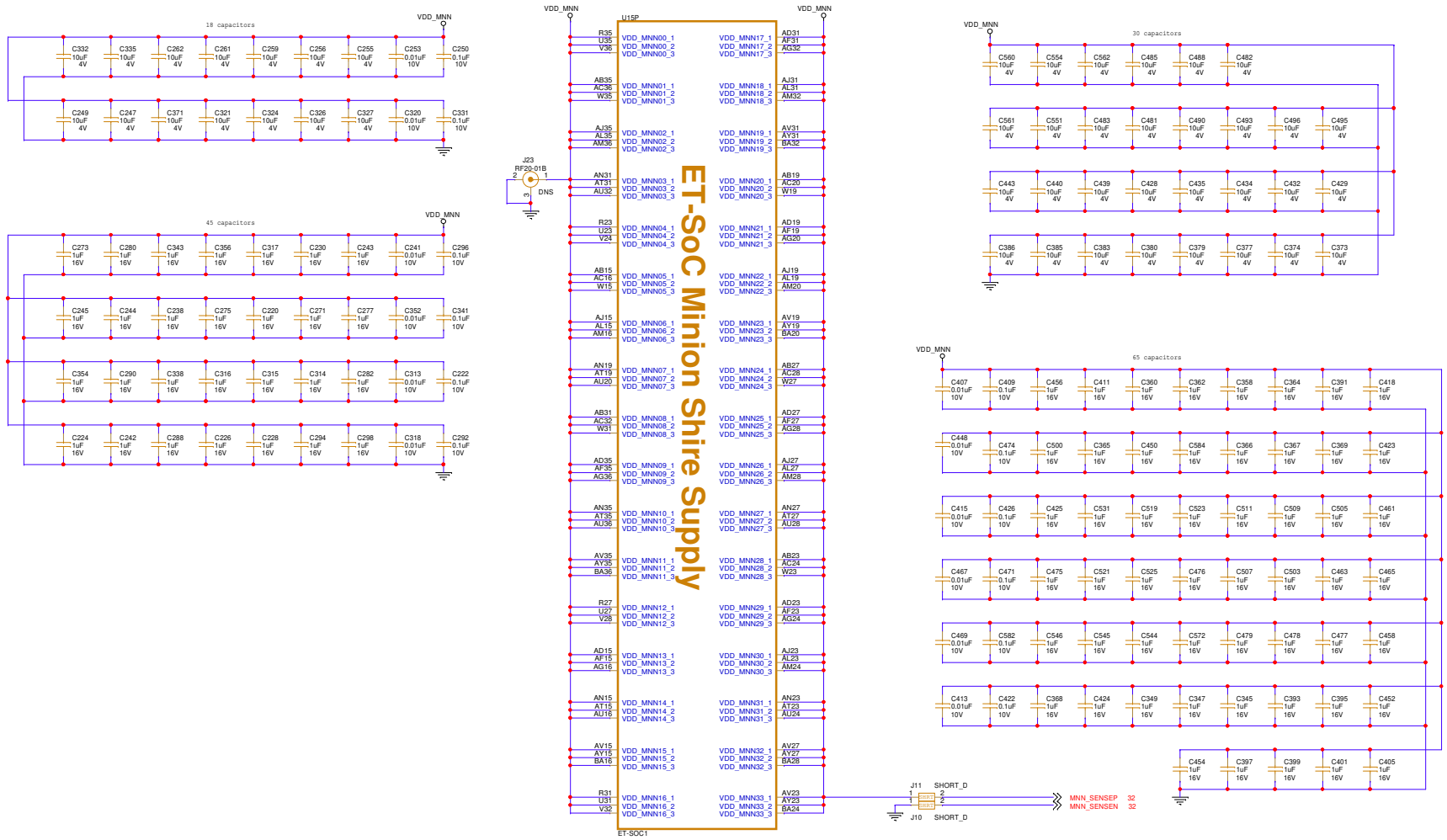

aifoundry@nekko.ai

NEKKO.

Doc Title: MXM		Doc Num: 400-00050	
Page Title: 19 - SOC - Minion Power		Drawn By: Bruce Klein	
Date: Monday, March 16, 2026	Size: C	Sheet: 19 of 38	Rev: 1

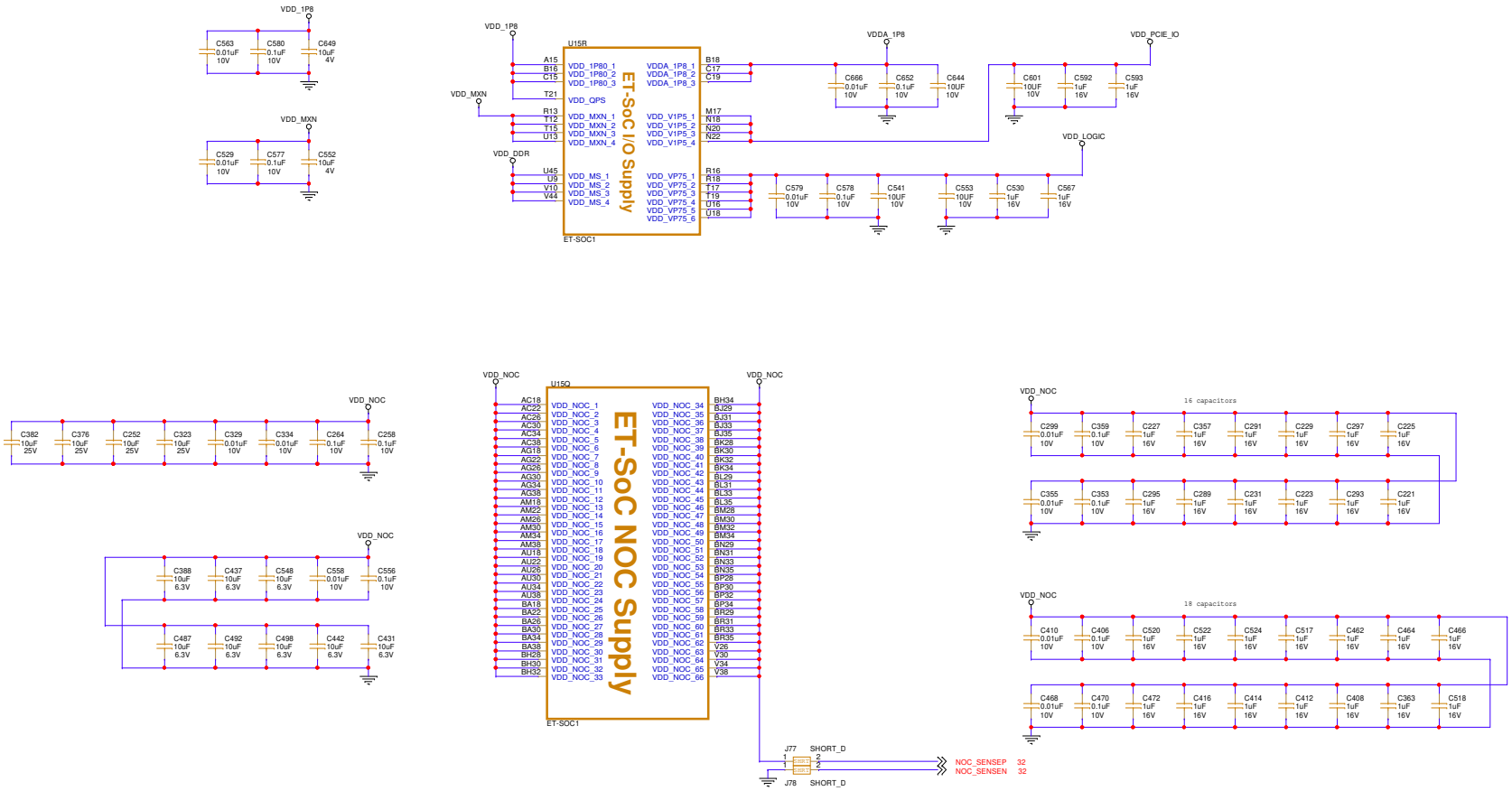

aifoundry@nekko.ai

NEKKO.

Doc Title: MXM		Doc Num: 400-00050	
Page Title: 20 - SOC - NOC, Maxion Power		Drawn By: Bruce Klein	
Date: Monday, March 16, 2026	Size: C	Sheet: 20 of 38	Rev: 1

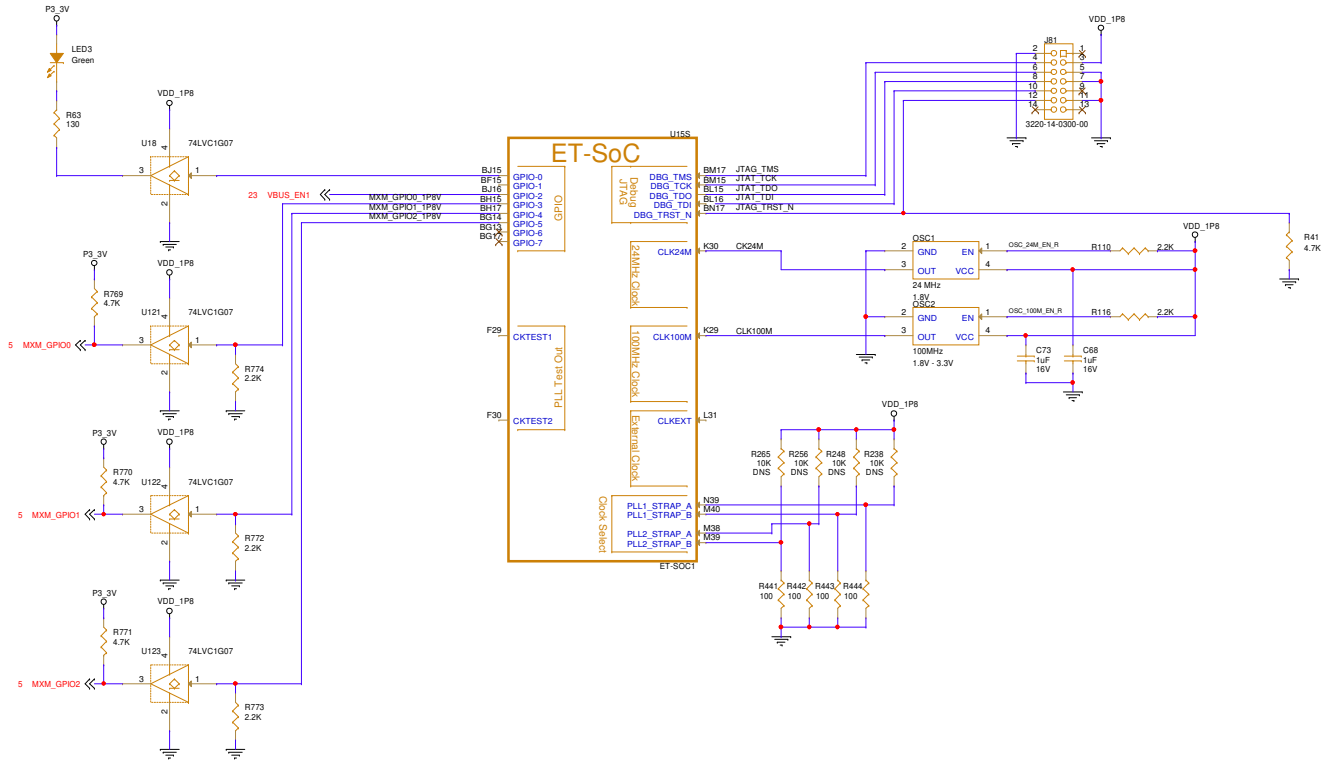

aifoundry@nekko.ai

RiNEKKO.

Doc Title: MXM		Doc Num: 400-00050	
Page Title: 21 - SOC - GPIO, CLK, JTAG		Drawn By: Bruce Klein	
Date: Monday, March 16, 2026	Size: C	Sheet: 21 of 38	Rev: 1

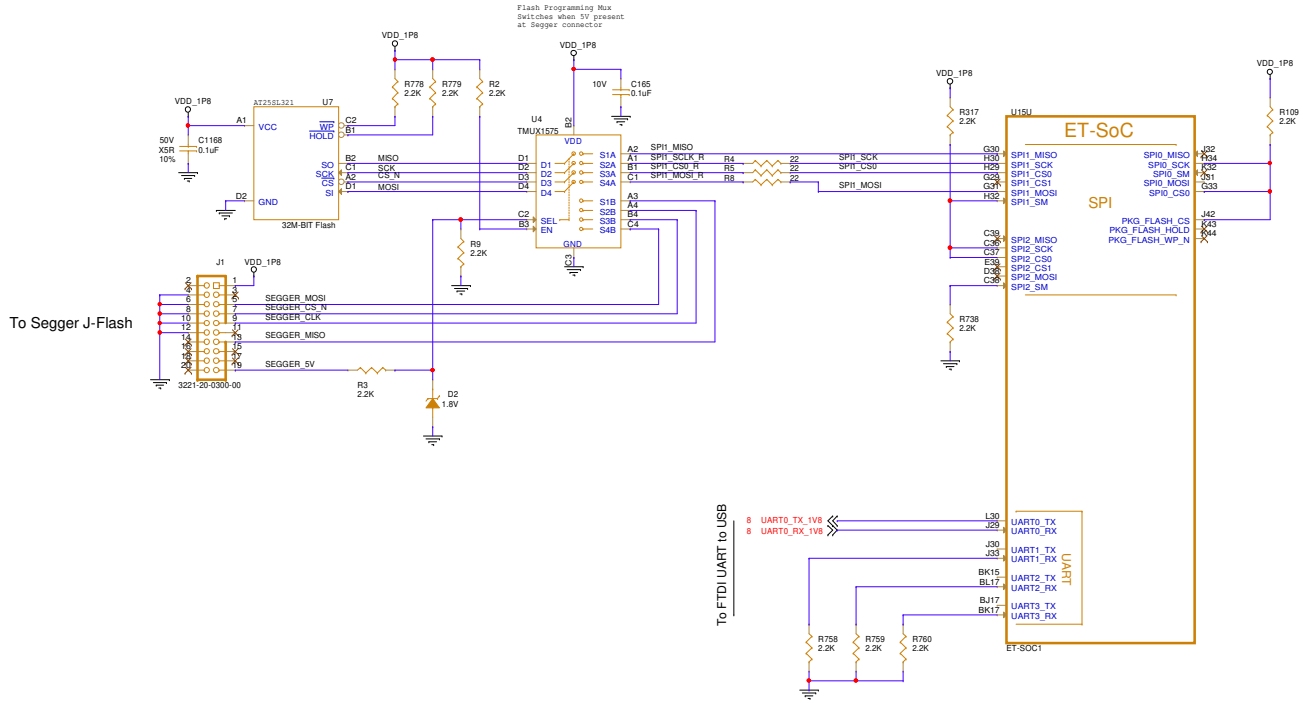

aifoundry@nekko.ai

RiNEKKO.

Doc Title: MXM		Doc Num: 400-00050	
Page Title: 22 - SOC - SPI, UART		Drawn By: Bruce Klein	
Date: Monday, March 16, 2026	Size: C	Sheet: 22 of 38	Rev: 1

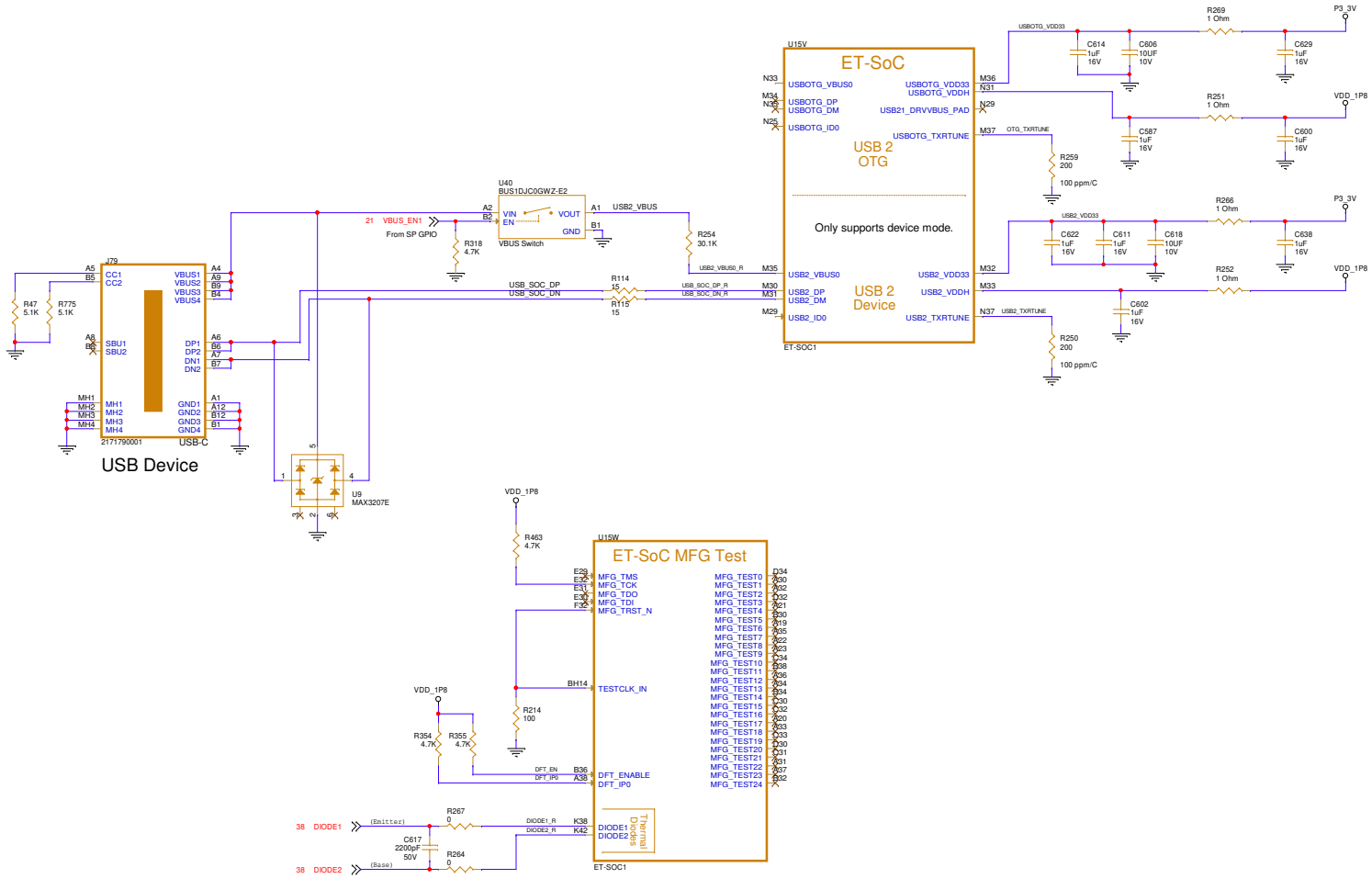

aifoundry@nekko.ai

NEKKO.

Doc Title: MXM		Doc Num: 400-00050	
Page Title: 23 - SOC - USB/TEST		Drawn By: Bruce Klein	
Date: Monday, March 16, 2026	Size: C	Sheet: 23 of 38	Rev: 1

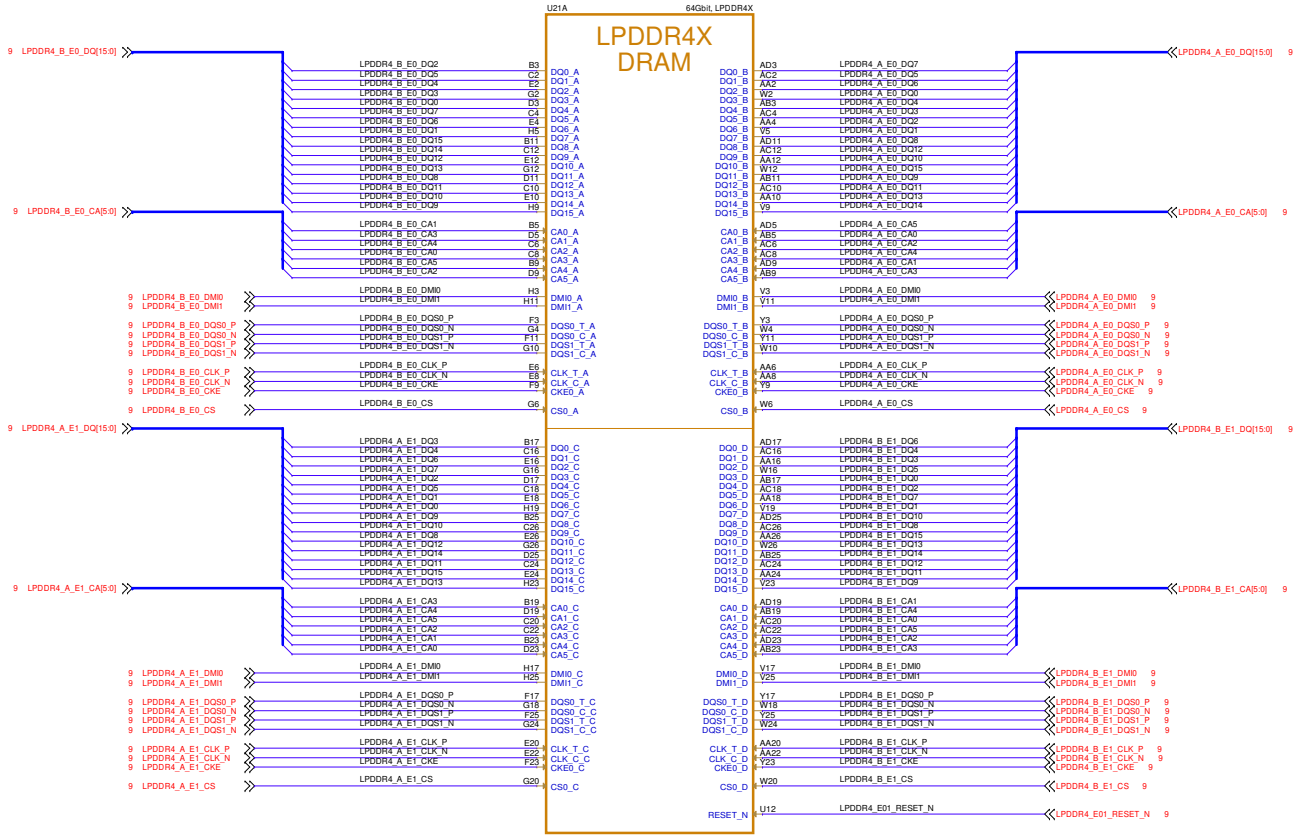

aifoundry@nekko.ai

RiNEKKO.

Doc Title: MXM		Doc Num: 400-00050	
Page Title: 24 - LPDDR4x - E01 - 1		Drawn By: Bruce Klein	
Date: Monday, March 16, 2026	Size: C	Sheet: 24 of 38	Rev: 1

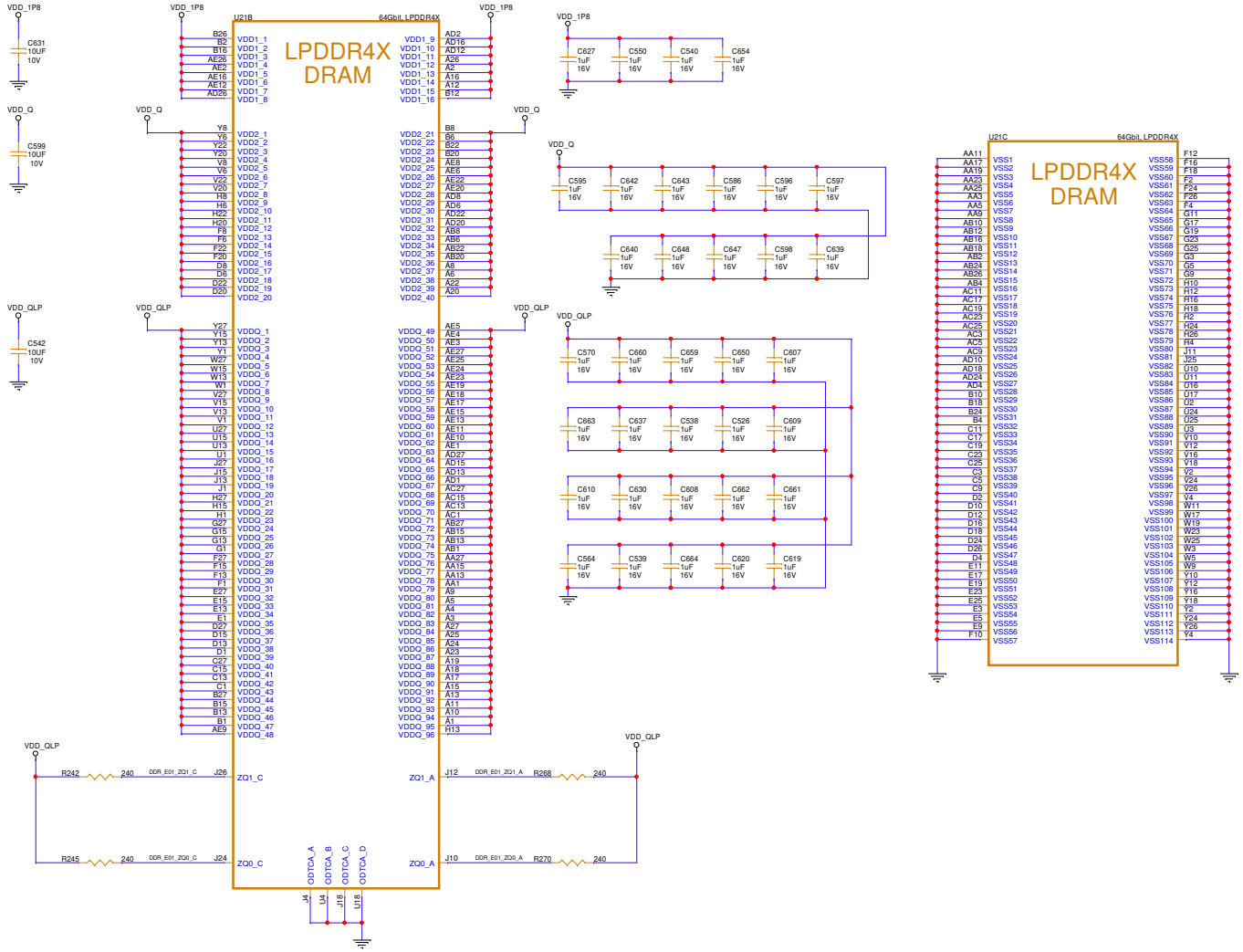

aifoundry@nekko.ai

RiNEKKO.

Doc Title: MXM		Doc Num: 400-00050	
Page Title: 25 - LPDDR4x - E01 - 2		Drawn By: Bruce Klein	
Date: Monday, March 16, 2026	Size: C	Sheet: 25 of 38	Rev: 1

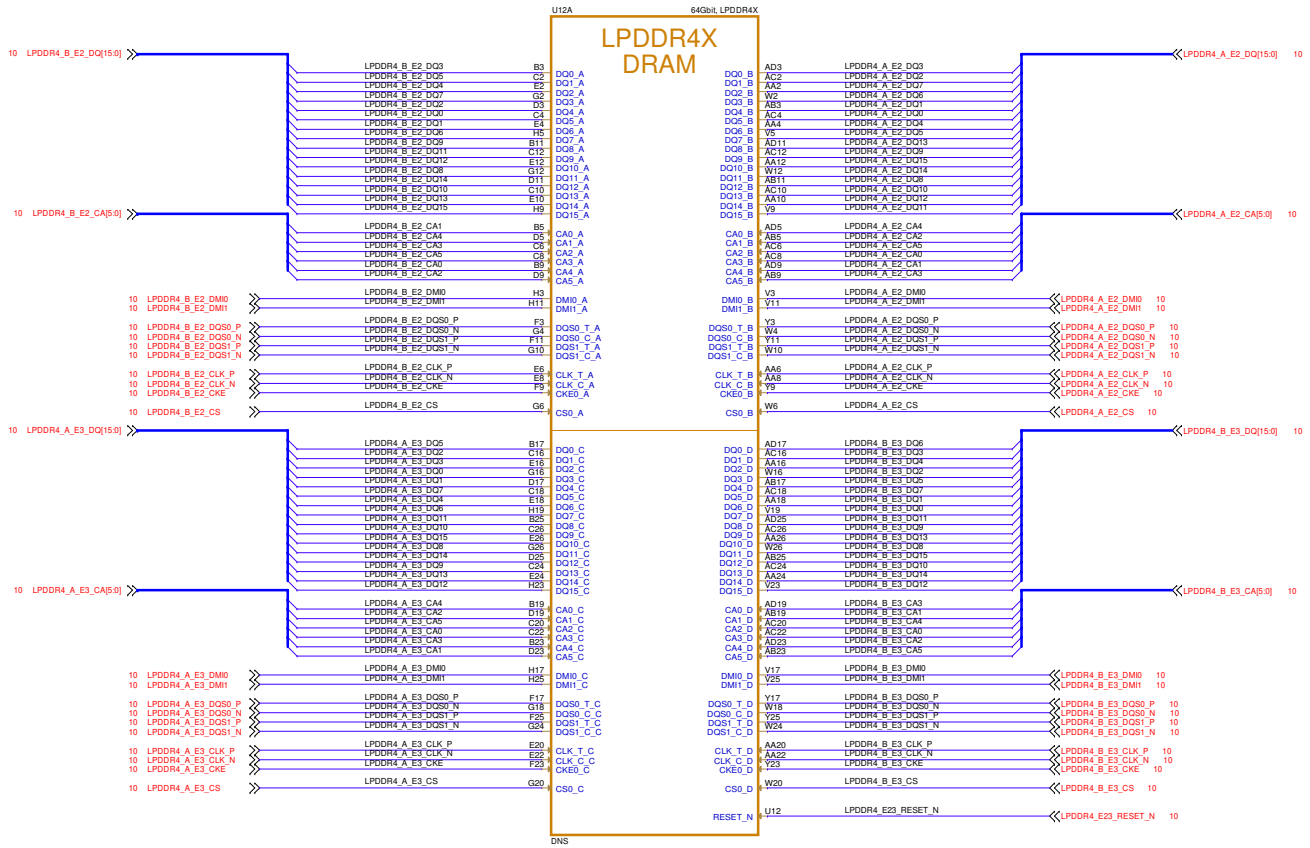

aifoundry@nekko.ai

NEKKO.

Doc Title: MXM		Doc Num: 400-00050	
Page Title: 26 - LPDDR4x - E23 - 1		Drawn By: Bruce Klein	
Date: Monday, March 16, 2026	Size: C	Sheet: 26 of 38	Rev: 1

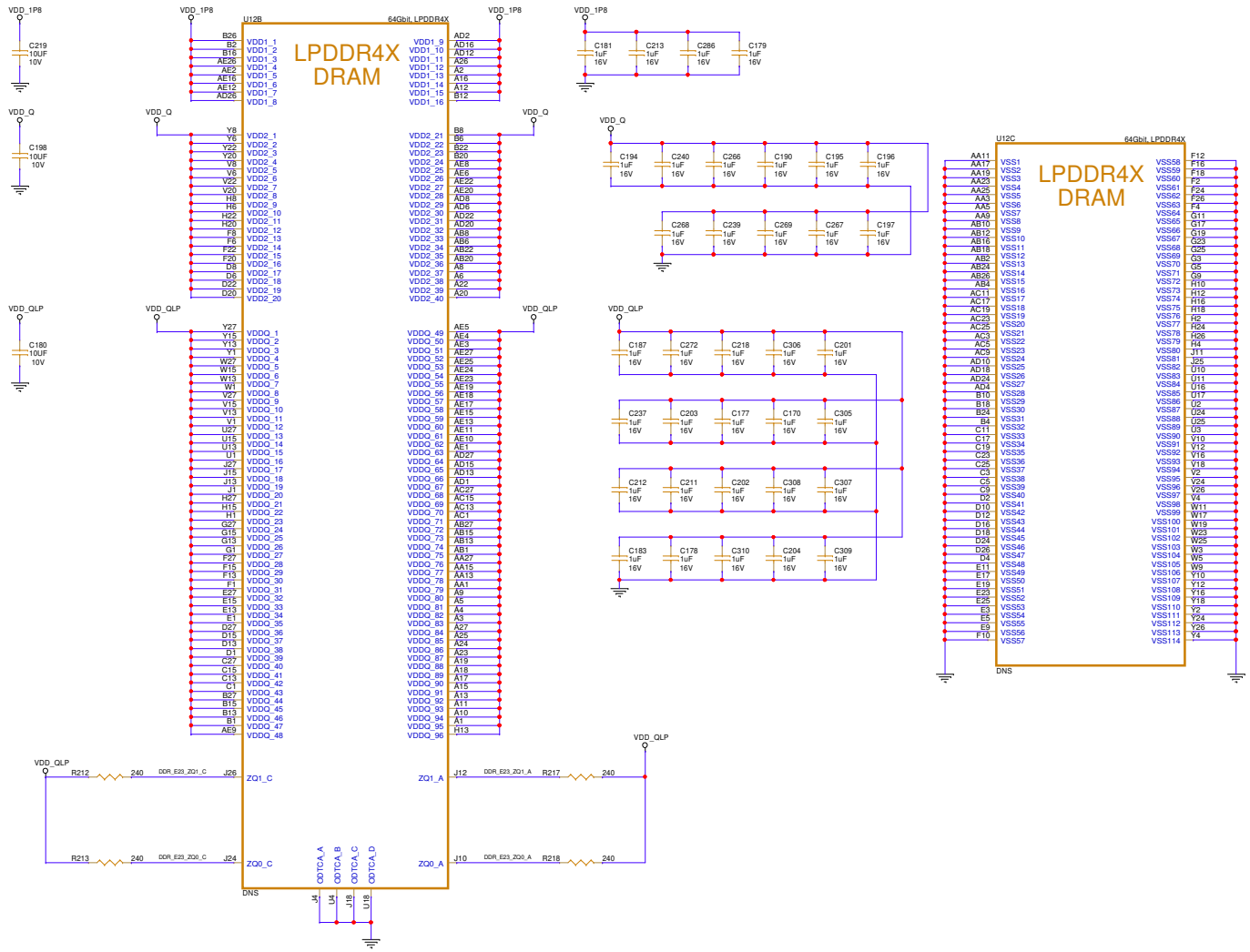

aifoundry@nekko.ai

NEKKO.

Doc Title: MXM		Doc Num: 400-00050	
Page Title: 27 - LPDDR4x - E23 - 2		Drawn By: Bruce Klein	
Date: Monday, March 16, 2026	Size: C	Sheet: 27 of 38	Rev: 1

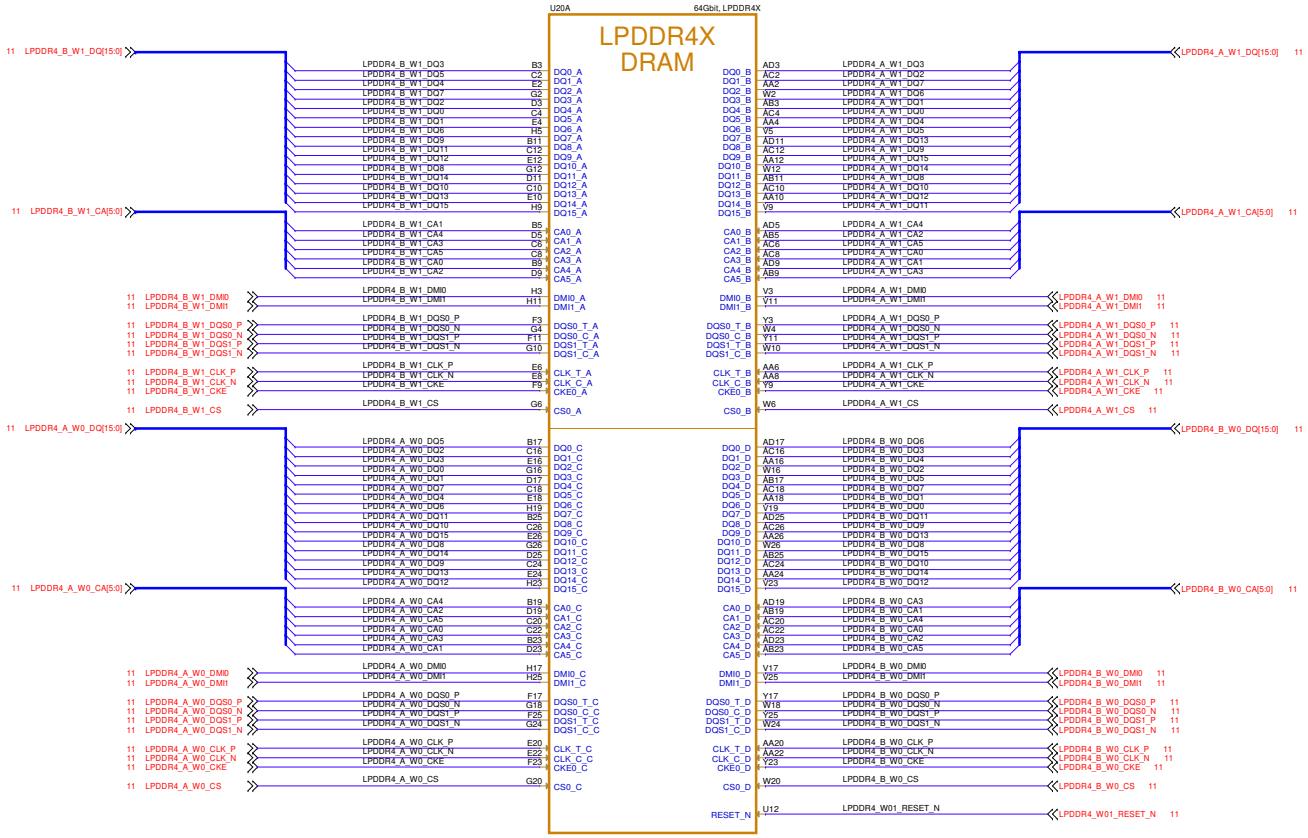

aifoundry@nekko.ai

NEKKO.

Doc Title: MXM		Doc Num: 400-00050	
Page Title: 28 - LPDDR4x - W01 - 1		Drawn By: Bruce Klein	
Date: Monday, March 16, 2026	Size: C	Sheet: 28 of 38	Rev: 1

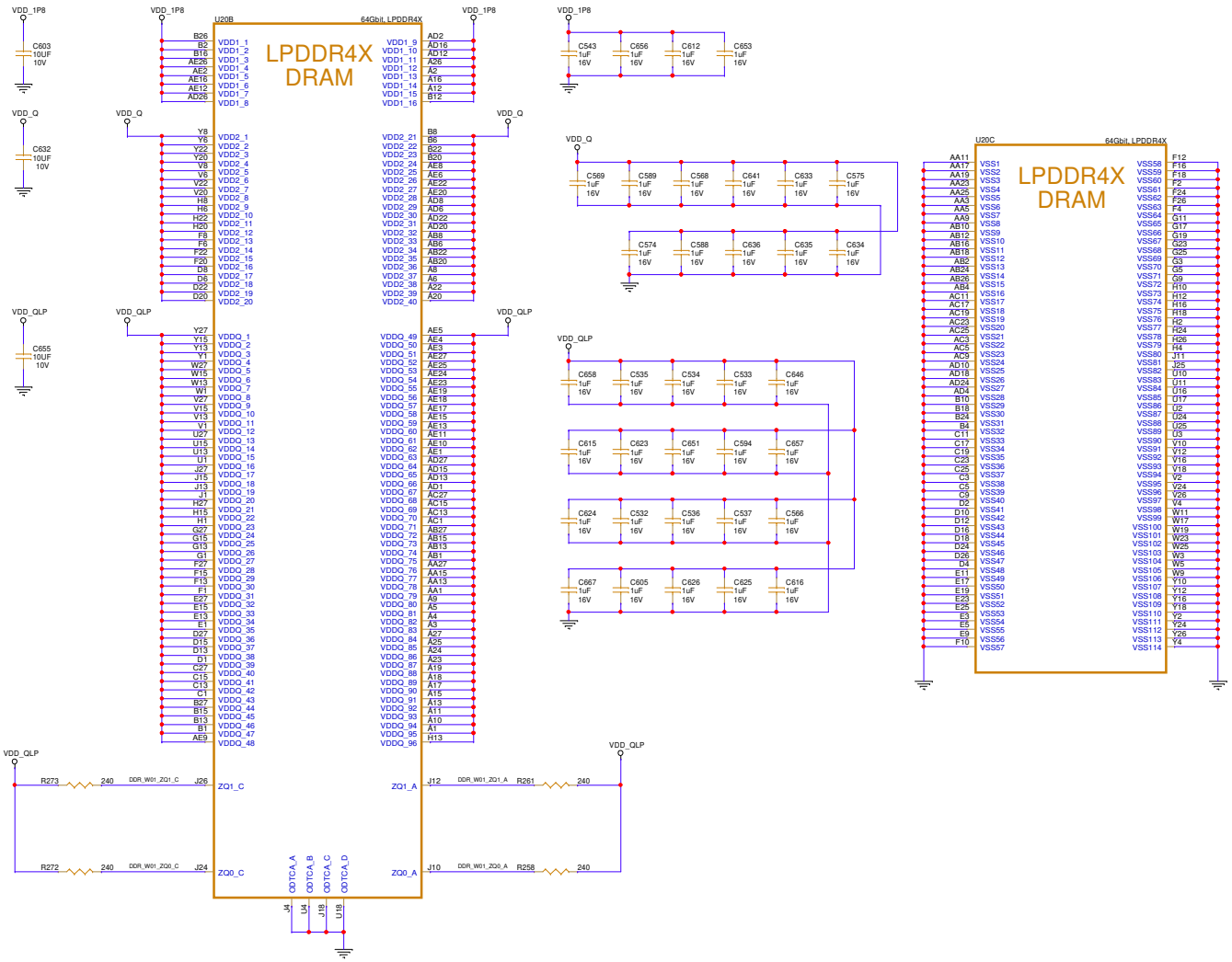

aifoundry@nekko.ai

NEKKO.

Doc Title: MXM		Doc Num: 400-00050	
Page Title: 29 - LPDDR4x - W01 - 2		Drawn By: Bruce Klein	
Date: Monday, March 16, 2026	Size: C	Sheet: 29 of 38	Rev: 1

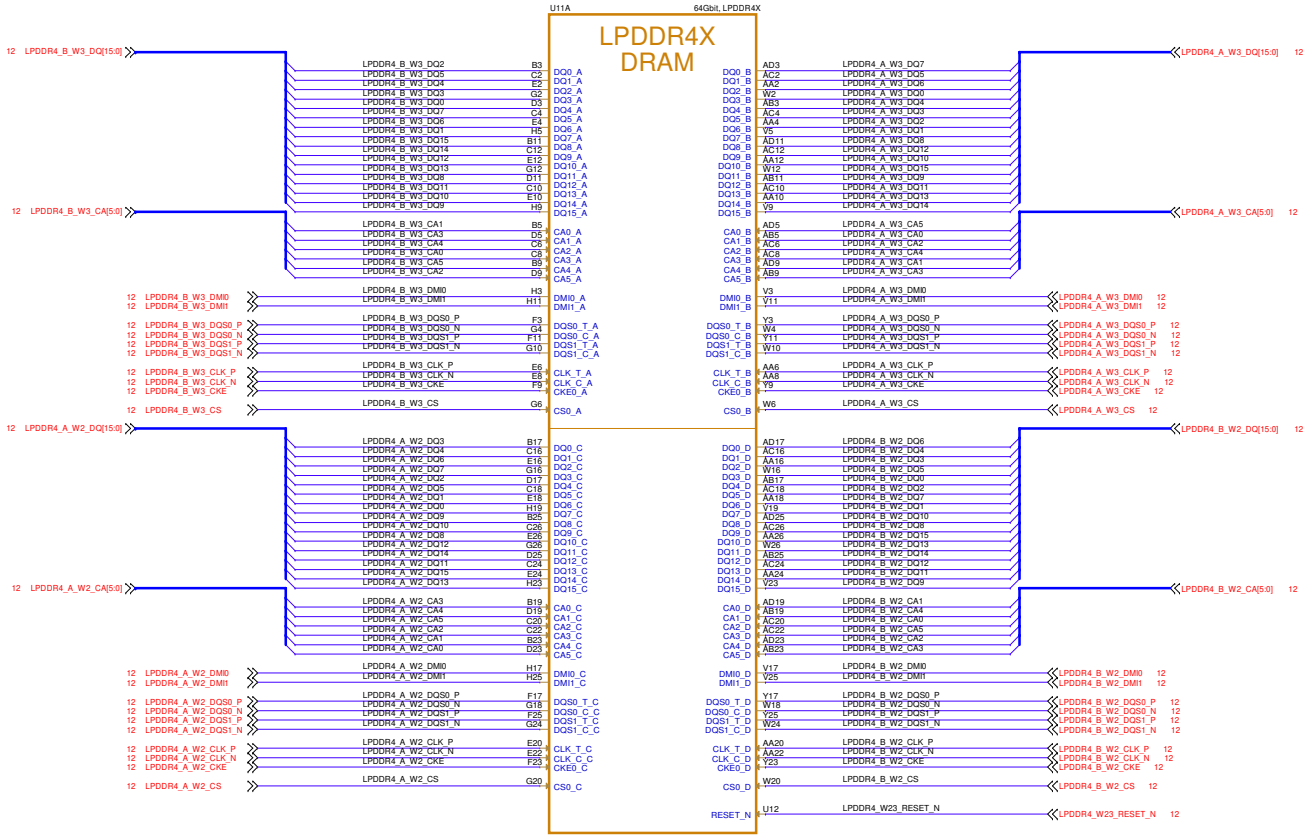

aifoundry@nekko.ai

NEKKO.

Doc Title: MXM		Doc Num: 400-00050	
Page Title: 30 - LPDDR4x - W23 - 1		Drawn By: Bruce Klein	
Date: Monday, March 16, 2026	Size: C	Sheet: 30 of 38	Rev: 1

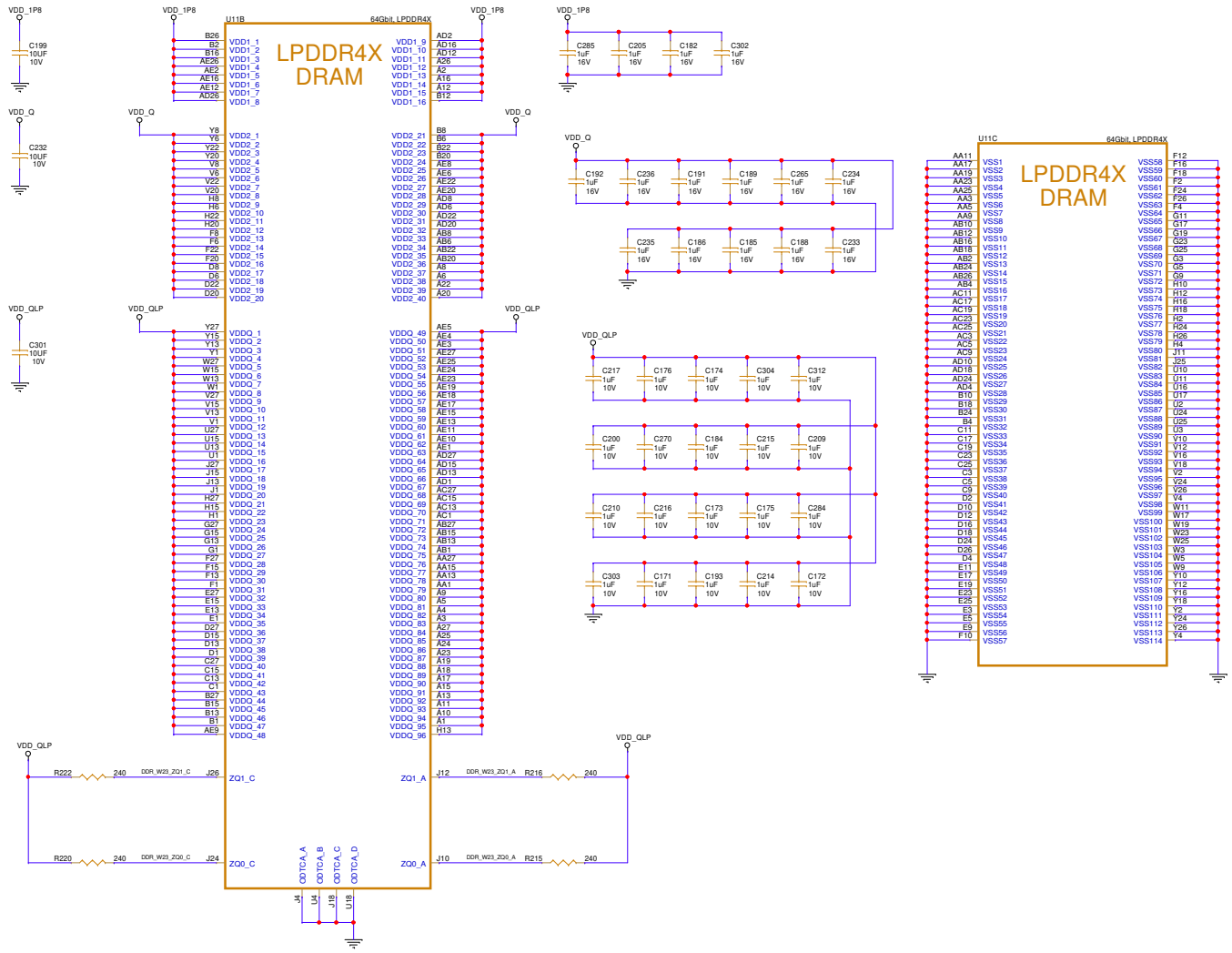

aifoundry@nekko.ai

NEKKO.

Doc Title: MXM		Doc Num: 400-00050	
Page Title: 31 - LPDDR4x - W23 - 2		Drawn By: Bruce Klein	
Date: Monday, March 16, 2026	Size: C	Sheet: 31 of 38	Rev: 1

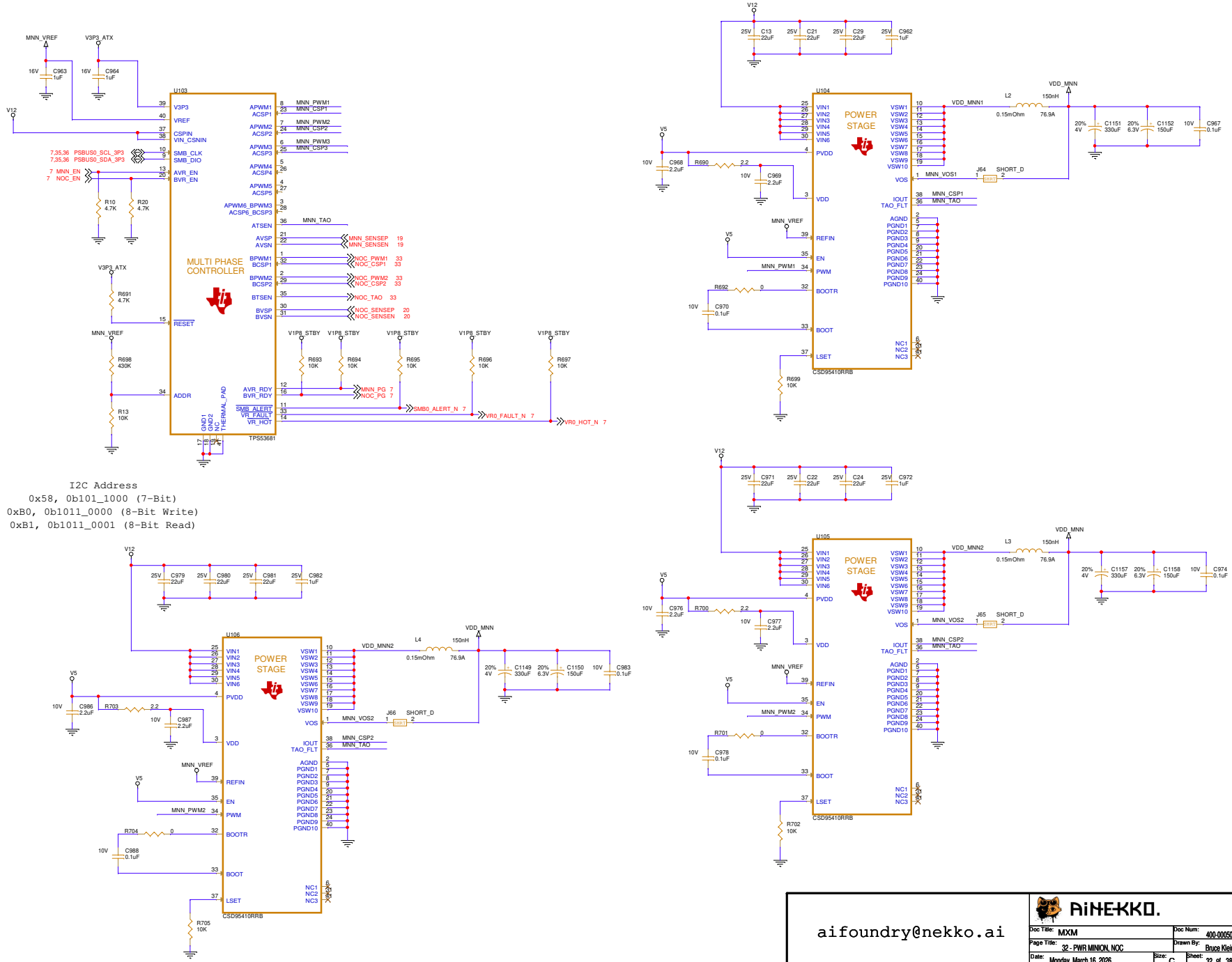

I2C Address
0x58, 0b101_1000 (7-Bit)
0xB0, 0b1011_0000 (8-Bit Write)
0xB1, 0b1011_0001 (8-Bit Read)

aifoundry@nekko.ai

NEKKO.

Doc Title: MXM		Doc Num: 400-00050	
Page Title: 32 - PWR MINION, NOC		Drawn By: Bruce Klein	
Date: Monday, March 16, 2026	Size: C	Sheet: 32 of 38	Rev: 1

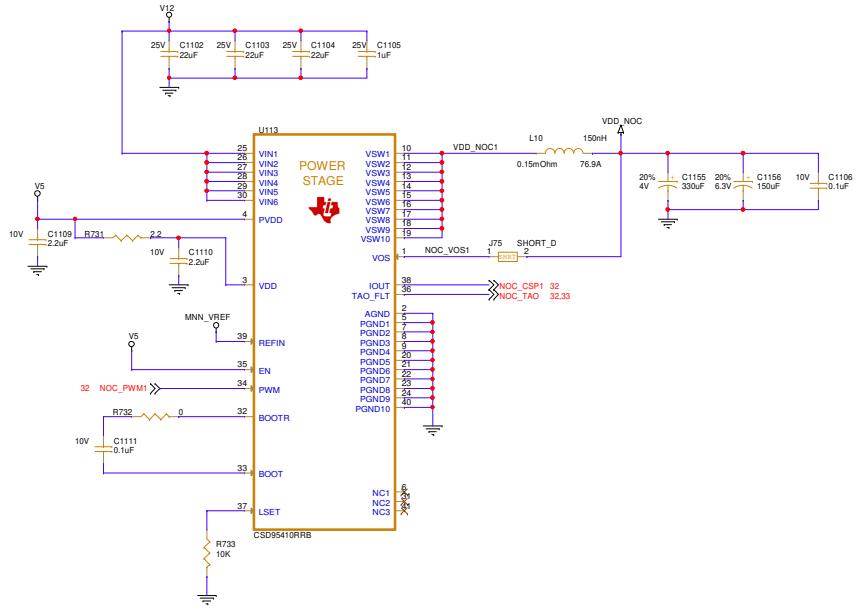

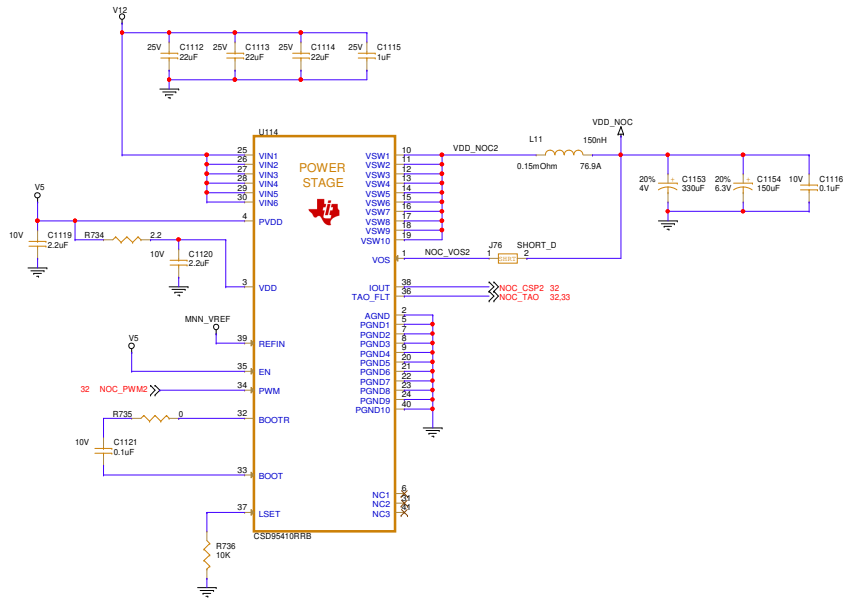

aifoundry@nekko.ai
AiNEKKO.

Doc Title:
Doc Num:
Page Title:
Drawn By:
Date:
Size:
Sheet: of
Rev:

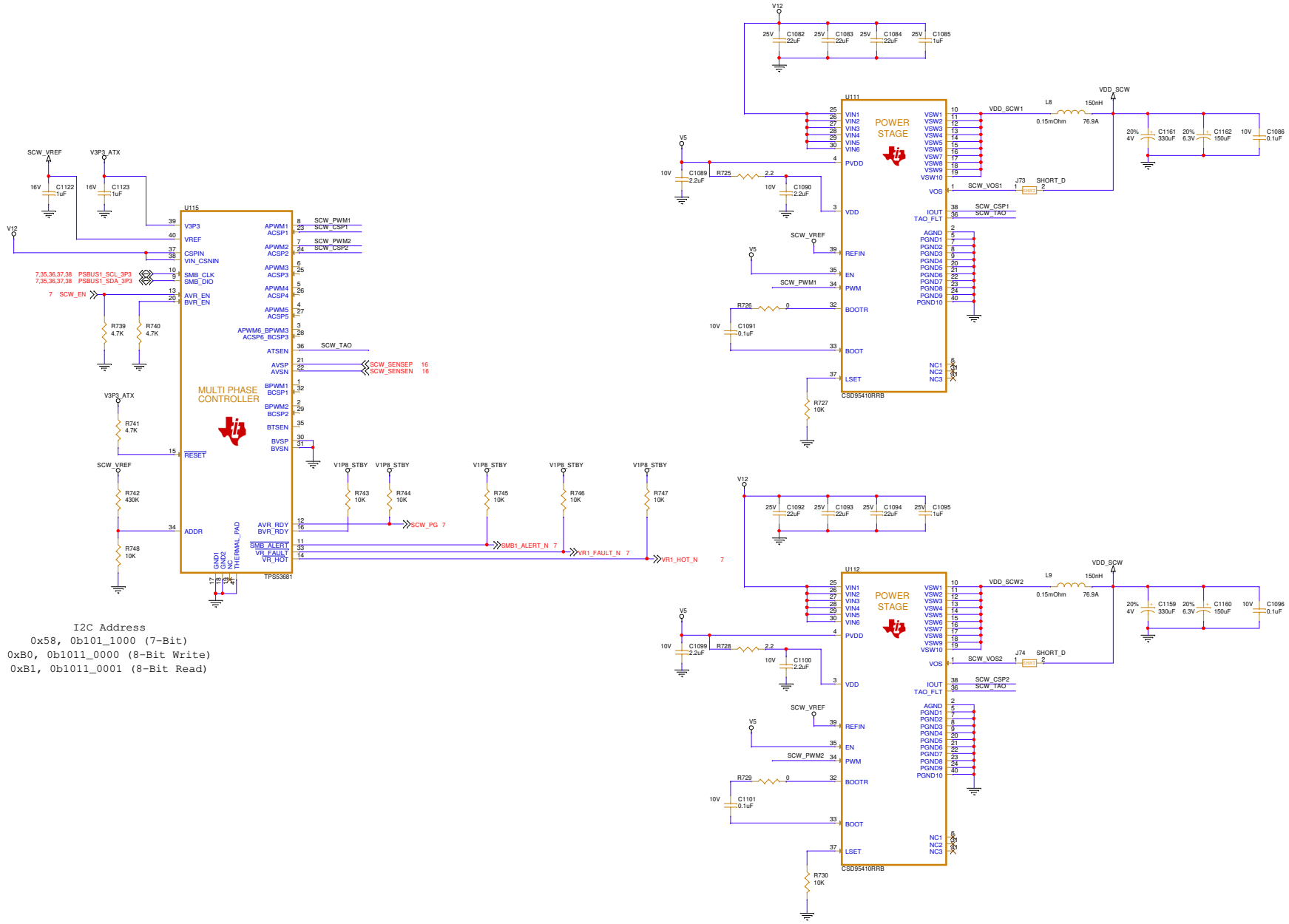

I2C Address
0x58, 0b101_1000 (7-Bit)
0xB0, 0b1011_0000 (8-Bit Write)
0xB1, 0b1011_0001 (8-Bit Read)

aifoundry@nekko.ai

AiNEKKO.

Doc Title: MXM		Doc Num: 400-00050	
Page Title: 34 - PWR SCW		Drawn By: Bruce Klein	
Date: Monday, March 16, 2026	Size: C	Sheet: 34 of 38	Rev: 1

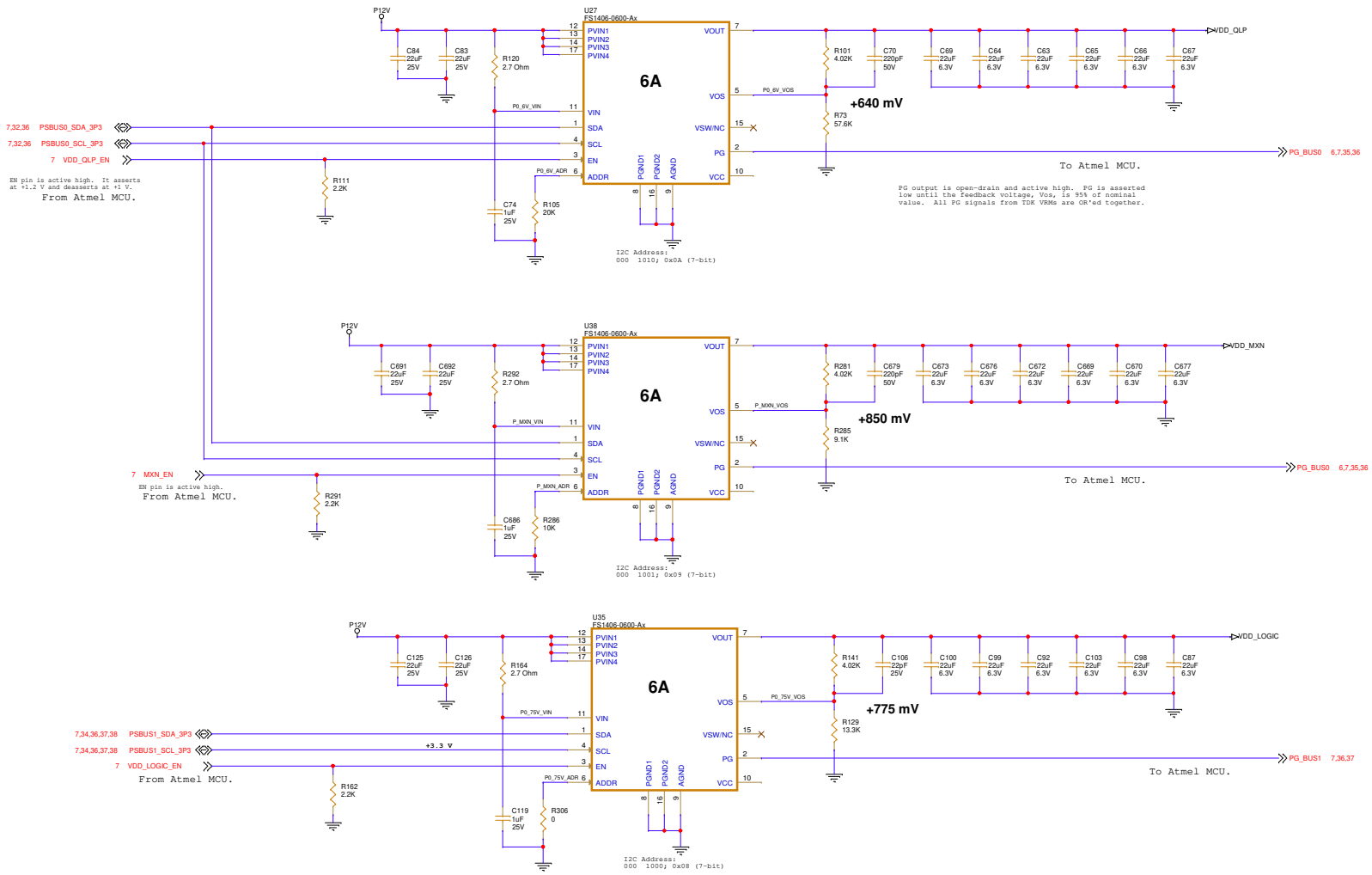

aifoundry@nekko.ai

RiNEKKO.

Doc Title: MXM		Doc Num: 400-00050	
Page Title: 35 - PWR VDD QLP, MXN, LOGIC		Drawn By: Bruce Klein	
Date: Monday, March 16, 2026	Size: C	Sheet: 35 of 38	Rev: 1

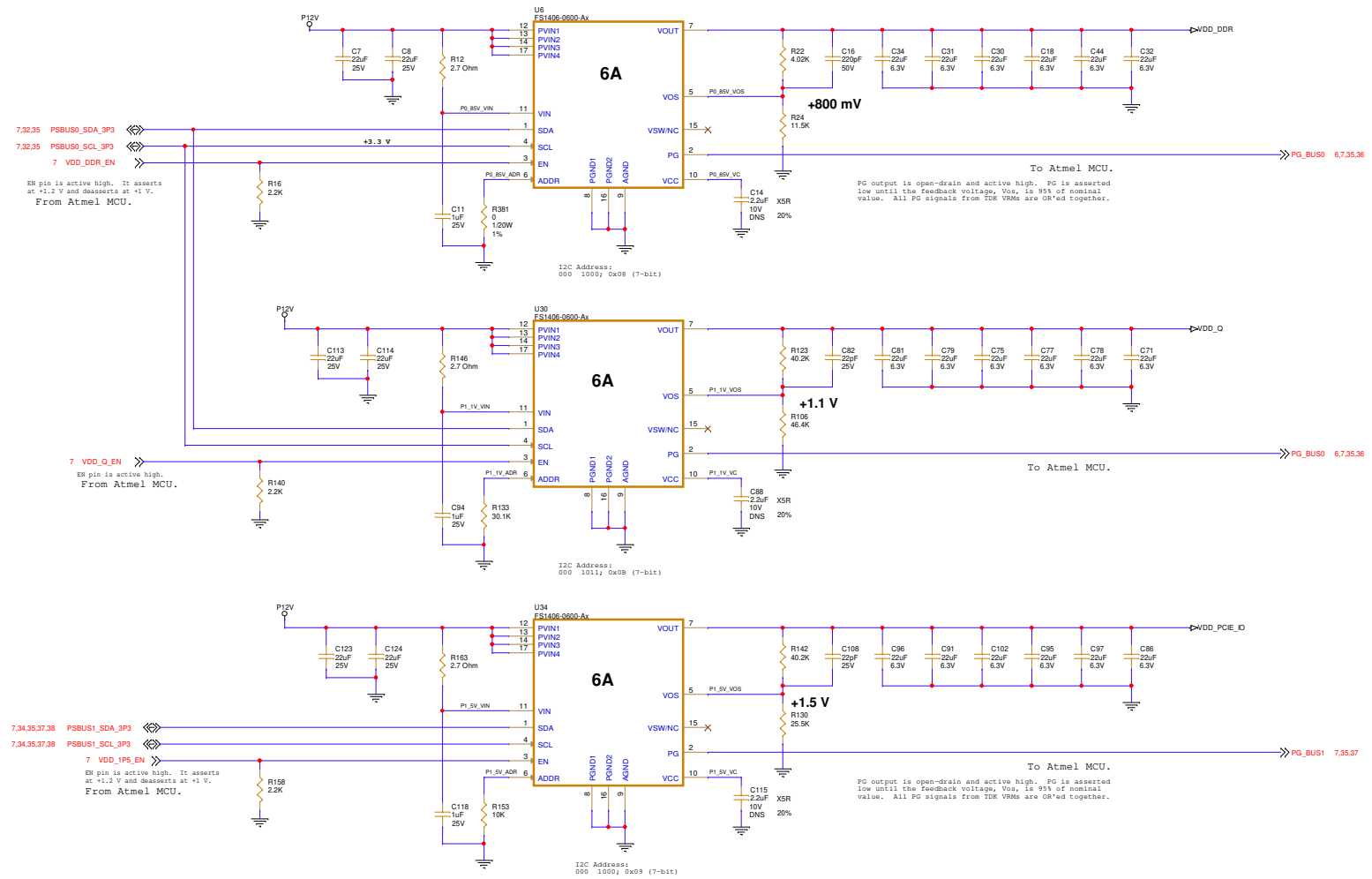

aifoundry@nekko.ai

NEKKO.

Doc Title: MXM		Doc Num: 400-00050	
Page Title: 36 - PWR VDD DDR, Q, 1P5		Drawn By: Bruce Klein	
Date: Monday, March 16, 2026	Size: C	Sheet: 36 of 38	Rev: 1

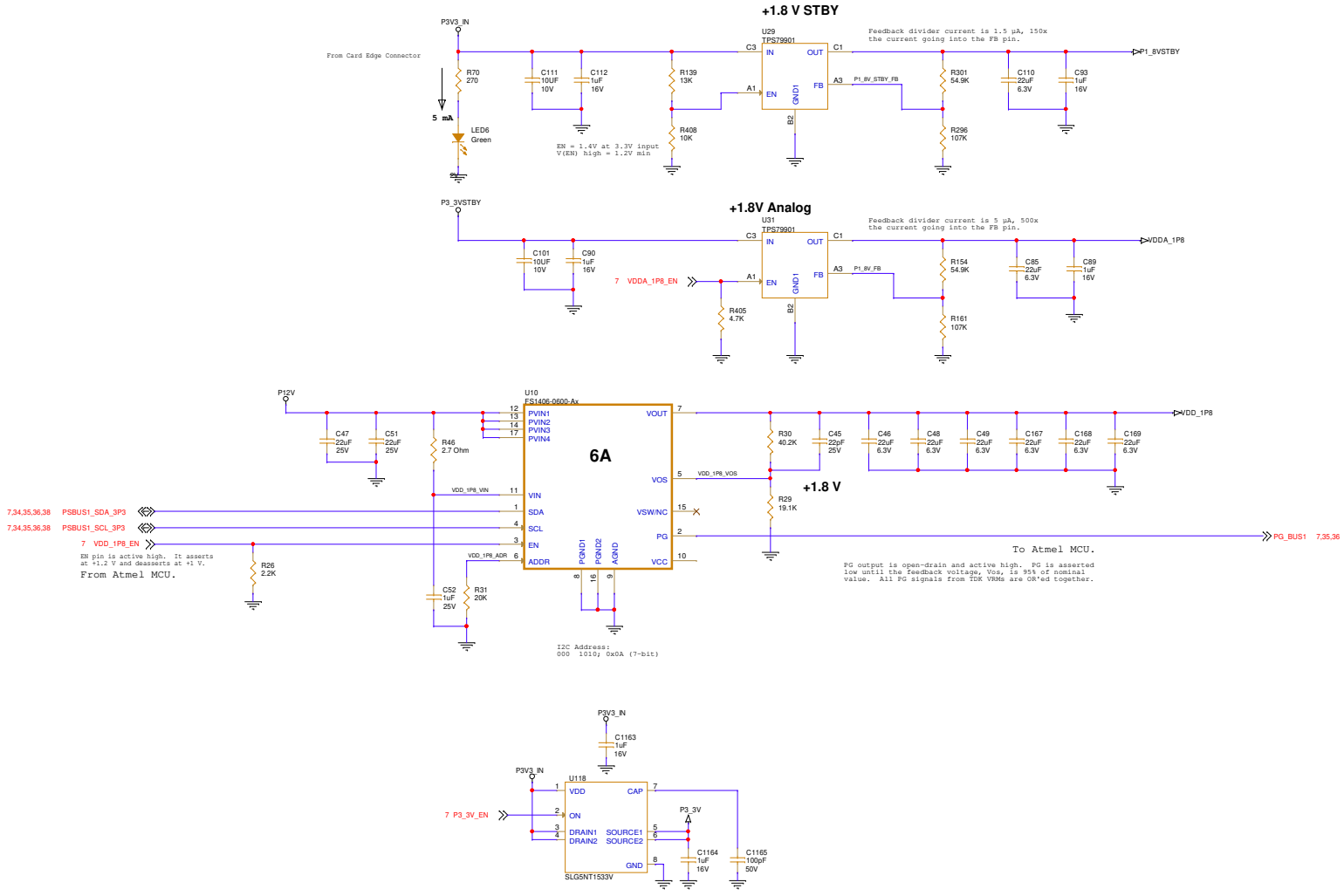

aifoundry@nekko.ai

NEKKO.

Doc Title: MXM		Doc Num: 400-00050	
Page Title: 37 - PWR 1.8V, 3.3V Switched		Drawn By: Bruce Klein	
Date: Monday, March 16, 2026	Size: C	Sheet: 37 of 38	Rev: 1

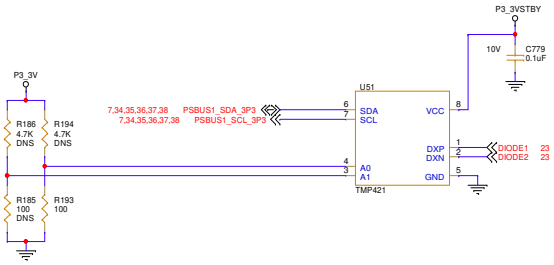

I2C Address:
Default, A0 is pulled Low and A1 is float.
001 1100; 0x1C (7-bit)
0011 1000; 0x38 (8-bit write)
0011 1001; 0x39 (8-bit read)

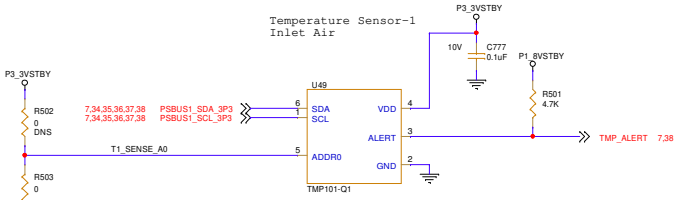

Default, A0 is pulled Low, target address is 1001000
Address (7 bit): 100 1000 (0x48)
1001 0000 (0x90) - 8 bit Write
1001 0001 (0x91) - 8 bit Read

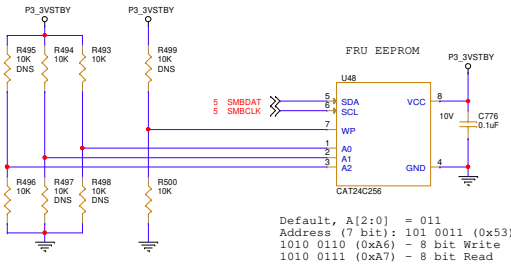

Default, A[2:0] = 011
Address (7 bit): 101 0011 (0x53)
1010 0110 (0xA6) - 8 bit Write
1010 0111 (0xA7) - 8 bit Read

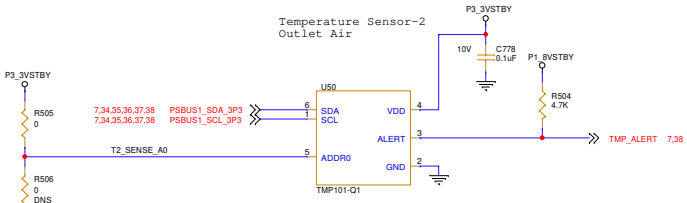

Default, A0 is pulled HIGH, target address is 1001010
Address (7 bit): 100 1010 (0x4A)
1001 0100 (0x94) - 8 bit Write
1001 0101 (0x95) - 8 bit Read

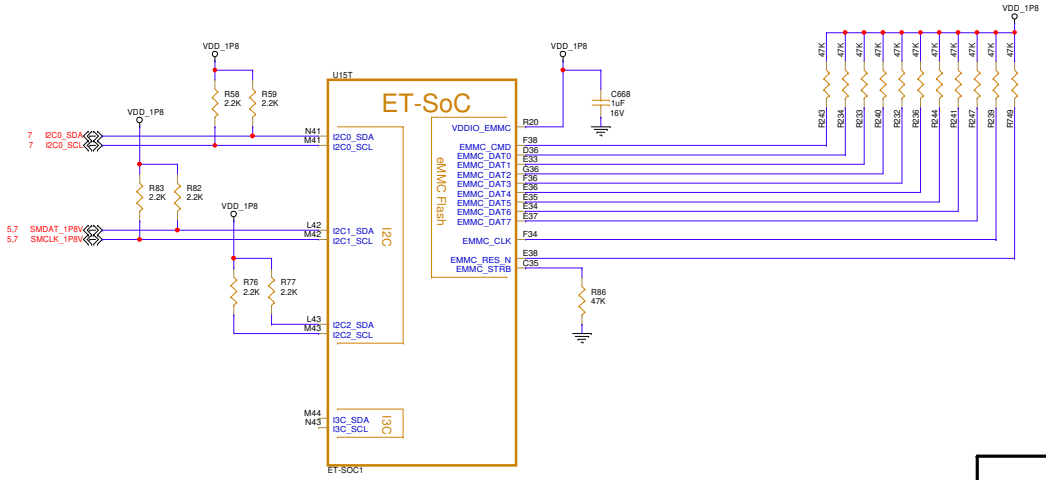

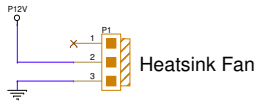

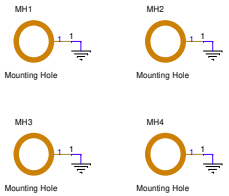

aifoundry@nekko.ai

RiNEKKO.

Doc Title: MXM		Doc Num: 400-00050	
Page Title: 38 - Diode, Temp, FRU EEPROM		Drawn By: Bruce Klein	
Date: Monday, March 16, 2026	Size: C	Sheet: 38 of 38	Rev: 1